APPENDIX

TECHNICAL APPENDIX
TABLE OF CONTENTS

APPENDIX A

Scoping Document

APPENDIX B

Existing (2009) Traffic Volumes & Count Sheets

APPENDIX C

Level of Service Definitions

APPENDIX D

Intersection Capacity Analysis Results – Existing Conditions (2009)

APPENDIX E

VDOT's Historical Growth Data

APPENDIX F

Approved Development Trip Generation and Site Volumes (2012)

Future Volume Projections Memorandum and Email Correspondence

APPENDIX G

Intersection Capacity Analysis Results – Future Conditions without Proposed Development (2012)

APPENDIX H

Direction of Approach Projection Estimates and Calculations

APPENDIX I-1

Intersection Capacity Analysis Results – Future Conditions with Proposed Development (2012), Alternative 1

APPENDIX I-2

Intersection Capacity Analysis Results – Future Conditions with Proposed Development (2012), Alternative 2

APPENDIX J

Approved Development Trip Generation and Site Volumes (2015)

APPENDIX K-1

Intersection Capacity Analysis Results – Future Conditions without Development (2015), HS Peak-Alternative 1

APPENDIX K-2

Intersection Capacity Analysis Results – Future Conditions without Development (2015), HS Peak-Alternative 2

APPENDIX K-3

Intersection Capacity Analysis Results – Future Conditions without Development (2015), ES Peak-Alternative 1

APPENDIX K-4

Intersection Capacity Analysis Results – Future Conditions without Development (2015), ES Peak-Alternative 2

APPENDIX L-1

Intersection Capacity Analysis Results – Future Conditions with Proposed Development (2015), HS Peak-Alternative 1

APPENDIX L-2

Intersection Capacity Analysis Results – Future Conditions with Proposed Development (2015), HS Peak-Alternative 2

APPENDIX L-3

Intersection Capacity Analysis Results – Future Conditions with Proposed Development (2015), ES Peak-Alternative 1

APPENDIX L-4

Intersection Capacity Analysis Results – Future Conditions with Proposed Development (2015), ES Peak-Alternative 2

APPENDIX M

Approved Development Trip Generation and Site Volumes (2020)

APPENDIX N-1

Intersection Capacity Analysis Results – Future Conditions with Proposed Development (2020), HS Peak-Alternative 1

APPENDIX N-2

Intersection Capacity Analysis Results – Future Conditions with Proposed Development (2020), HS Peak-Alternative 2

APPENDIX N-3

Intersection Capacity Analysis Results – Future Conditions with Proposed Development (2020), ES Peak-Alternative 1

APPENDIX N-4

Intersection Capacity Analysis Results – Future Conditions with Proposed Development (2020), ES Peak-Alternative 2

APPENDIX O

Right turn Lane Warrants

APPENDIX P

Left Turn Lane Warrants

APPENDIX Q

Signal Warrants

APPENDIX R

Queuing Analysis Results at Route 50 and Goshen Road

APPENDIX S

Heavy Vehicle Percentage at Site Entrances

APPENDIX T

Transportation Proffers for approved Development, Kirkpatrick Farms, and, Traffic Signal Design at Braddock Road and Gum Spring Road

APPENDIX A

SCOPING DOCUMENT

PRE-SCOPE OF WORK MEETING FORM

Information on the Project
Traffic Impact Analysis Base Assumptions

The applicant is responsible for having this form completed and returned to VDOT and the locality no less than three (3) business days prior to the meeting. If a completed form is not received by this deadline, the scope of work meeting may be postponed.

Contact Information	
Consultant Name: Tele: E-mail:	Christopher M. Tacinelli, Gorove/Slade Associates, Inc. 703-787-9595 cmt@goroveslade.com
Developer/Owner Name: Tele: E-mail:	Loudoun County Public Schools/Sara Howard O'Brien 571-252-1156 Sara.HowardOBrien@loudoun.k12.va.us

Project Information				
Project Name:	Loudoun County Public Schools (HS-7 and ES)			
Project Location: (Attach regional and site specific location map)	The property is situated on the east and west side of Goshen Road and approximately 1 mile south of Route 50 in Loudoun County, Virginia. Regional and site-specific location map attached. Please see Figures 1 and 2.			
Project Description: Including type of application (rezoning, subdivision, site plan), acreage, business square ft, number of dwelling units, access location, etc. Attach additional sheet if necessary)	Loudoun County Public Schools is proposing to develop an Elementary School and a High School on an assemblage of properties (approx. 97 acres), comprising of up to approx. 875 students and 1,800 students each respectively. Access would be provided via future proposed public Roads between Future Relocated Route 659 and the Proposed HS-7 site.			
Locality/County:	Loudoun County			
Proposed Use: (Check all that apply; attach additional pages as necessary)	Residential ☐	Commercial ☐	Mixed Use ☐	Other ✸
TRIP GENERATION TABLE ATTACHED.	**Residential** # of Units: _____ **Mixed Use** Sq Ft: _____ ,_____ ITE LU Code(s): _____ _____ _____ _____		**Commercial** Use Sq Ft: Elementary School: 875 Students (ITE LU Code 520) High School: 1,800 Students (ITE LU Code 530) ITE Trip Generation Edition 8 will be used	

Traffic Impact Analysis Assumptions					
Study Period	Existing Year: 2009	Build-out Year: 2012 for HS and 2015 for ES		Design Year: 2020	
Study Area Boundaries (Attach map)	North: Tall Cedars Parkway	South: Braddock Road			
	East: Future Relocated Route 659	West:			
External Factors That Could Affect Project (Planned road improvements, other nearby developments)	- Planned construction of Relocated Route 659, - Proposed abandonment of Goshen Road from Braddock Road to the northern end of the subject property, - Traffic signal installation at the intersection of Gum Spring Road and Braddock Road, - Widening of Gum Spring Road from Tall Cedars Parkway to Braddock Road, and, - Planned lane improvements at the intersection of Gum Spring Road and Braddock Road.				
Consistency With Comprehensive Plan	Yes.				
Available Traffic Data (Historical, forecasts)	VDOT AADT Data, Existing Traffic Counts (2009)				
Trip Distribution (Attach sketch)	Road Name:	N ___%	S ___%	E __%	W __ %
PLEASE SEE ATTACHED FIGURES 3, 4 and 5	Road Name:	N ___%	S ___%	E __%	W __ %
	Road Name:	N ___%	S ___%	E __%	W __ %
	Road Name:	N ___%	S ___%	E __%	W___%
Annual Vehicle Trip Growth Rate:		Peak Period for Study (Circle all that apply)	AM School Peak	PM School Peak	PM Commuter Peak
Study Intersections and/or Road Segments (Attach additional sheets as necessary)	1.Tall Cedars and Relocated Rt.659	6. Road A/School Entrance and Relocated Rt.659			
	2. Braddock Road and Relocated Rt.659	7. CD Smith Road/School Entrance and Relocated Rt.659.			
	3. Gum Spring Road and Tall Cedars Parkway	8.			
	4. Gum Spring Road and Braddock Road	9.			
	5. Goshen Road and Braddock Road	10.			
Trip Adjustment Factors	Internal allowance: ☐ Yes ✸ No Reduction: _____% trips	Pass-by allowance: ☐ Yes ✸ No Reduction: _____% trips			
Software Methodology	✸ Synchro ☐ HCS (v.2000/+) ☐ aaSIDRA ☐ CORSIM ☐ Other				
Traffic Signal Proposed or Affected	Synchro 7.				

(Analysis software to be used, progression speed, cycle length)	
Improvement(s) Assumed or to be Considered	- Planned construction of Relocated Route 659, - Proposed abandonment of Goshen Road from Braddock Road to the northern end of the subject property, - Traffic signal installation at the intersection of Gum Spring Road and Braddock Road, - Widening of Gum Spring Road from Tall Cedars Parkway to Braddock Road, and, - Planned lane improvements at the intersection of Gum Spring Road and Braddock Road.
Background Traffic Studies Considered **PLEASE SEE ATTACHED FIGURE 6**	- Greenfields Property, prepared by Wells + Associates, dated June 26, 2009 - Stone Ridge Commercial, prepared by Wells + Associates, dated January 26, 2009 - Catholic Diocese of Arlington, prepared by Wells + Associates, dated February 24, 2009 - Loudoun County Public School MS-5, prepared by Gorove Slade Associates, dated March 27, 2009
Plan Submission	☐ Master Development Plan (MDP) ☐ Generalized Development Plan (GDP) ☐ Preliminary/Sketch Plan ✸ Other Plan type (Special Exception, Site Plan)
Additional Issues to be addressed	☐ Queuing analysis ☐ Actuation/Coordination ☐ Weaving analysis ☐ Merge analysis ☐ Bike/Ped Accommodations ☐ Intersection(s) ☐ TDM Measures ☐ Other _____

NOTES on ASSUMPTIONS:

1. Study Time Periods:

School	Operating Hours	AM School Peak	PM School Peak	PM Commuter Peak
Elementary	7:50 AM - 2:35 PM	7:00 - 8:00 AM	2:15 - 3:15 PM	Will be based on Commuter Peak
High	9:00 AM - 3:48 PM	8:00 - 9:00 AM	3:30 - 4:30 PM	

Table 1: Trip Generation Table (Peak Hour of Adjacent Street Traffic)

Land Use	ITE Code	Size		------ Weekday ------						
				AM Peak Hour			PM Peak Hour			Daily
				In	Out	Total	In	Out	Total	Total
Elementary School	520	875	Students	194	158	352	65	67	132	1,129
High School	530	1800	Students	515	241	756	110	124	234	2,784
OVERALL TOTAL				**709**	**399**	**1,108**	**175**	**191**	**366**	**3,913**

Table 2: Trip Generation Table (Peak Hour of Generator)

Land Use	ITE Code	Size		------ Weekday ------						
				AM Peak Hour			PM Peak Hour			Daily
				In	Out	Total	In	Out	Total	Total
Elementary School	520	875	Students	194	158	352	107	130	237	1,129
High School	530	1800	Students	515	241	756	173	349	522	2,784
OVERALL TOTAL				**709**	**399**	**1,108**	**280**	**479**	**759**	**3,913**

Table 3: Inherent Growth Table

Roadway Segment	From	To	2006 AADT	2007 AADT	2008 AADT	Comparison 2006-07	2007-08	2006-08
Gum Spring Rd	Braddock Rd	Route 50	12,000	13,000	9,600	8%	-26%	-11%
Braddock Rd	Goshen Rd	Gum Spring Rd	190	190	190	0%	0%	0%
Goshen Rd	Braddock Rd	1.92MN53-620	740	740	740	0%	0%	0%

AGREED: _____ DATE: __11/18/2009__
Applicant or Consultant

PRINT NAME: Christopher Tacinelli, Gorove/Slade Associates, Inc.
Applicant or Consultant

SIGNED: _____ DATE: _____
VDOT Representative

PRINT NAME: _____
VDOT Representative

SIGNED: _____ DATE: _____
Local Government Representative

PRINT NAME: _____
Local Government Representative

Figure 1: Regional Map

Figure 2: Area Map and Site Location

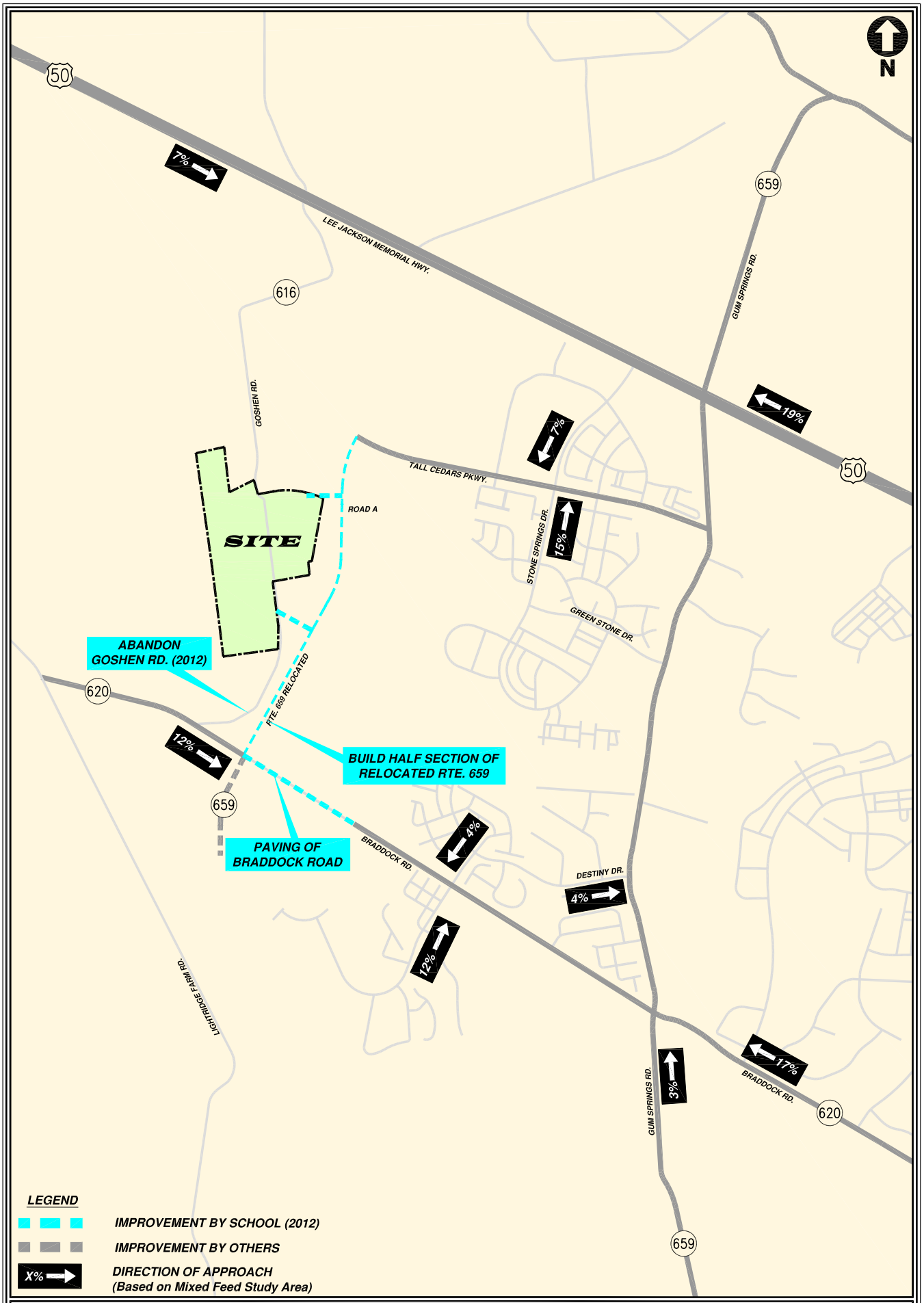

LCPS HS-1

Figure 3: DOA Alternative 1: Mixed Feed

GOROVE / SLADE ASSOCIATES, Inc.
TRANSPORTATION, TRAFFIC, and PARKING
1140 Connecticut Avenue NW / Suite 700 / Washington, DC 20036 / (202) 296-8625
3914 Centreville Road / Suite 330 / Chantilly, VA 20151 / (703) 787-9595

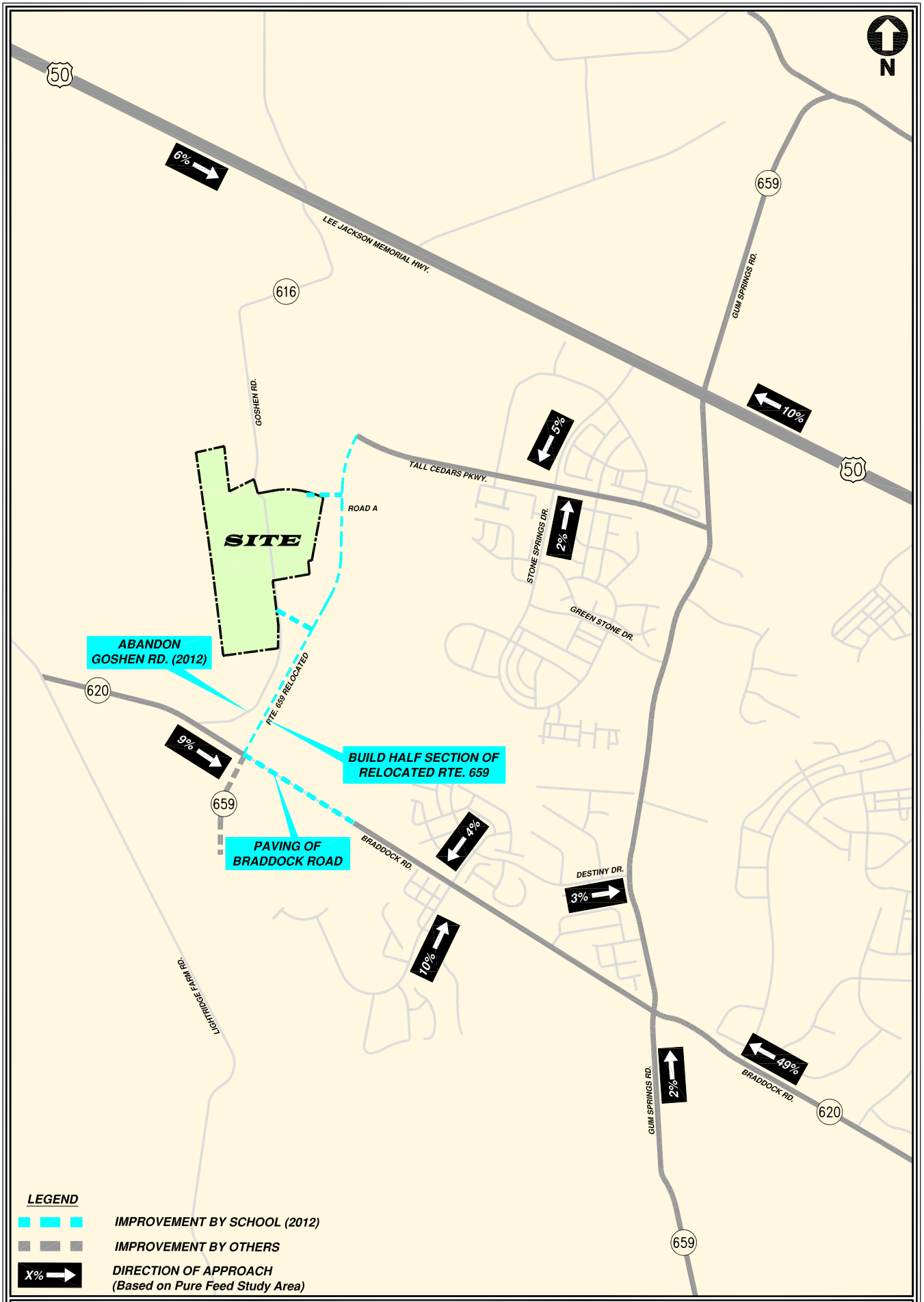

LCPS HS-7

Figure 4: DOA Alternative 2: Pure Feed

GOROVE / SLADE ASSOCIATES, Inc.
TRANSPORTATION, TRAFFIC, and PARKING
1140 Connecticut Avenue NW / Suite 700 / Washington, DC 20036 / (202) 296-8625
3914 Centreville Road / Suite 330 / Chantilly, VA 20151 / (703) 787-9595

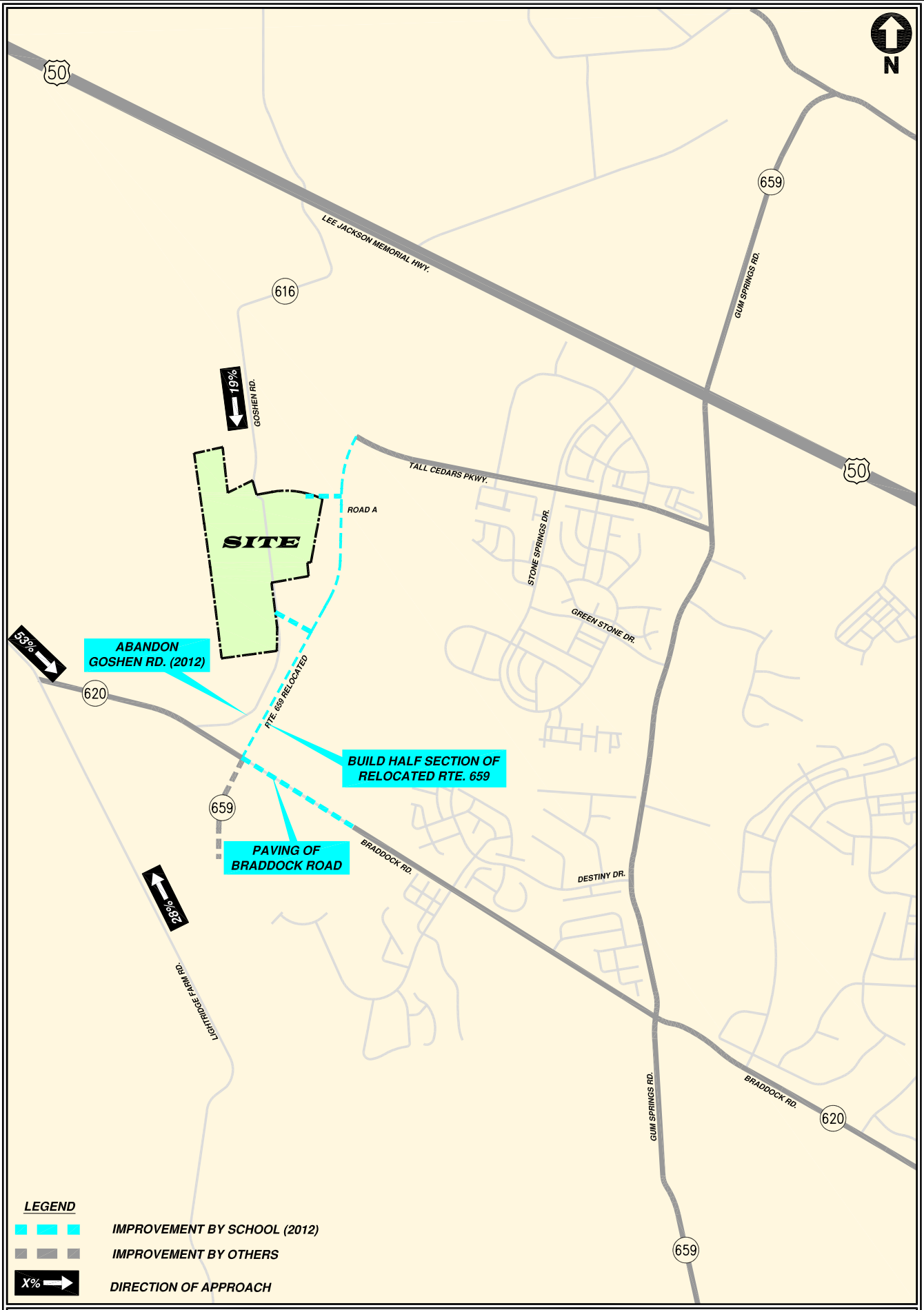

LCPS ES

Figure 5: DOA for Elementary School

GOROVE / SLADE ASSOCIATES, Inc.
TRANSPORTATION, TRAFFIC, and PARKING
1140 Connecticut Avenue NW / Suite 700 / Washington, DC 20036 / (202) 296-8625
3914 Centreville Road / Suite 330 / Chantilly, VA 20151 / (703) 787-9595

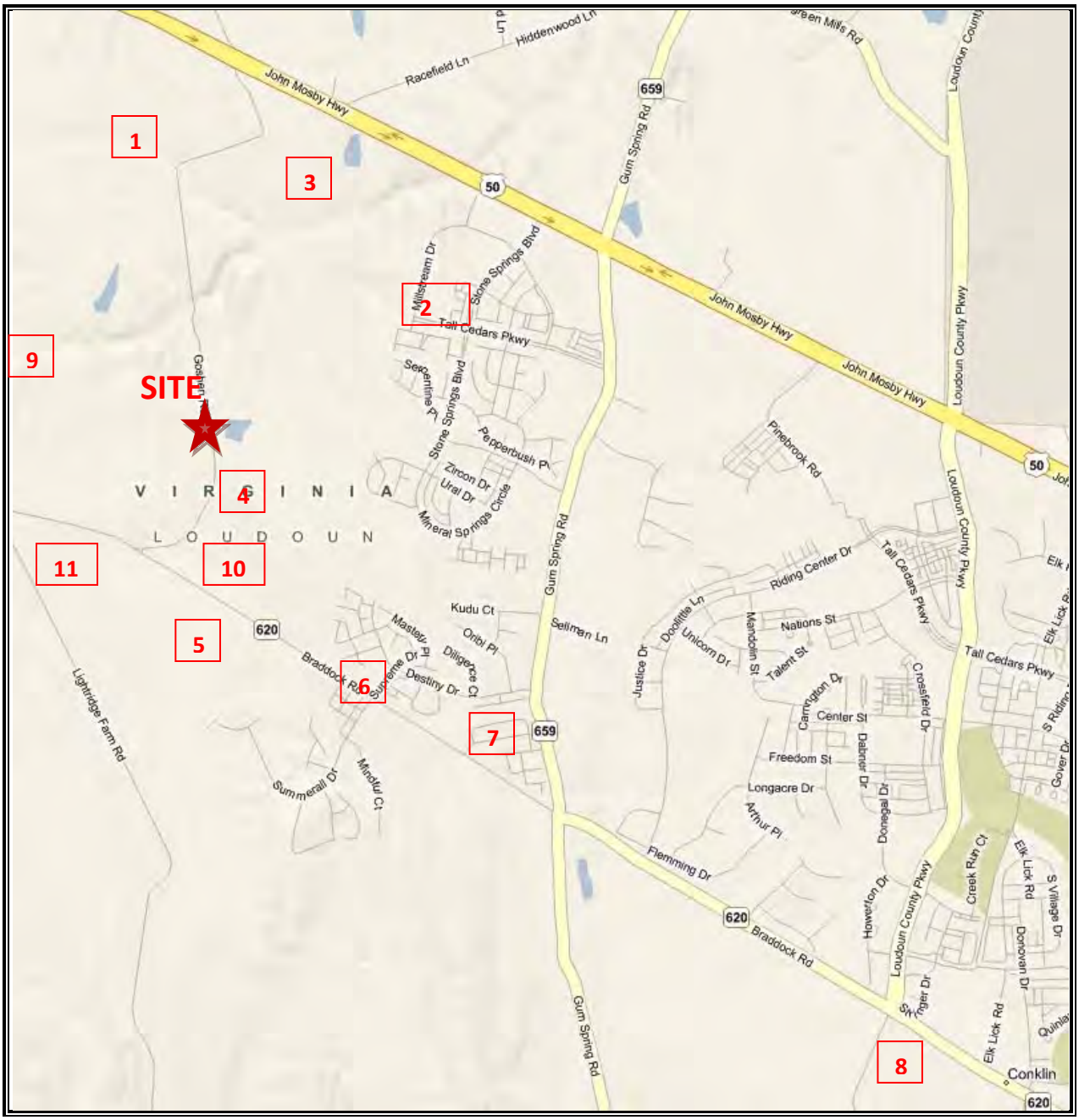

Figure 6: Background Development Location Map

1 Westport By-Right Property
2 Stone Ridge
3 Marrwood Property
4 CD Smith
5 Kirkpatrick Farms West
6 Kirkpatrick Farms
7 Braddock Corner
8 LCPS MS-5
9 Greenfields (By-right Density)
10 Greenfield Crossing
11 Greenfields

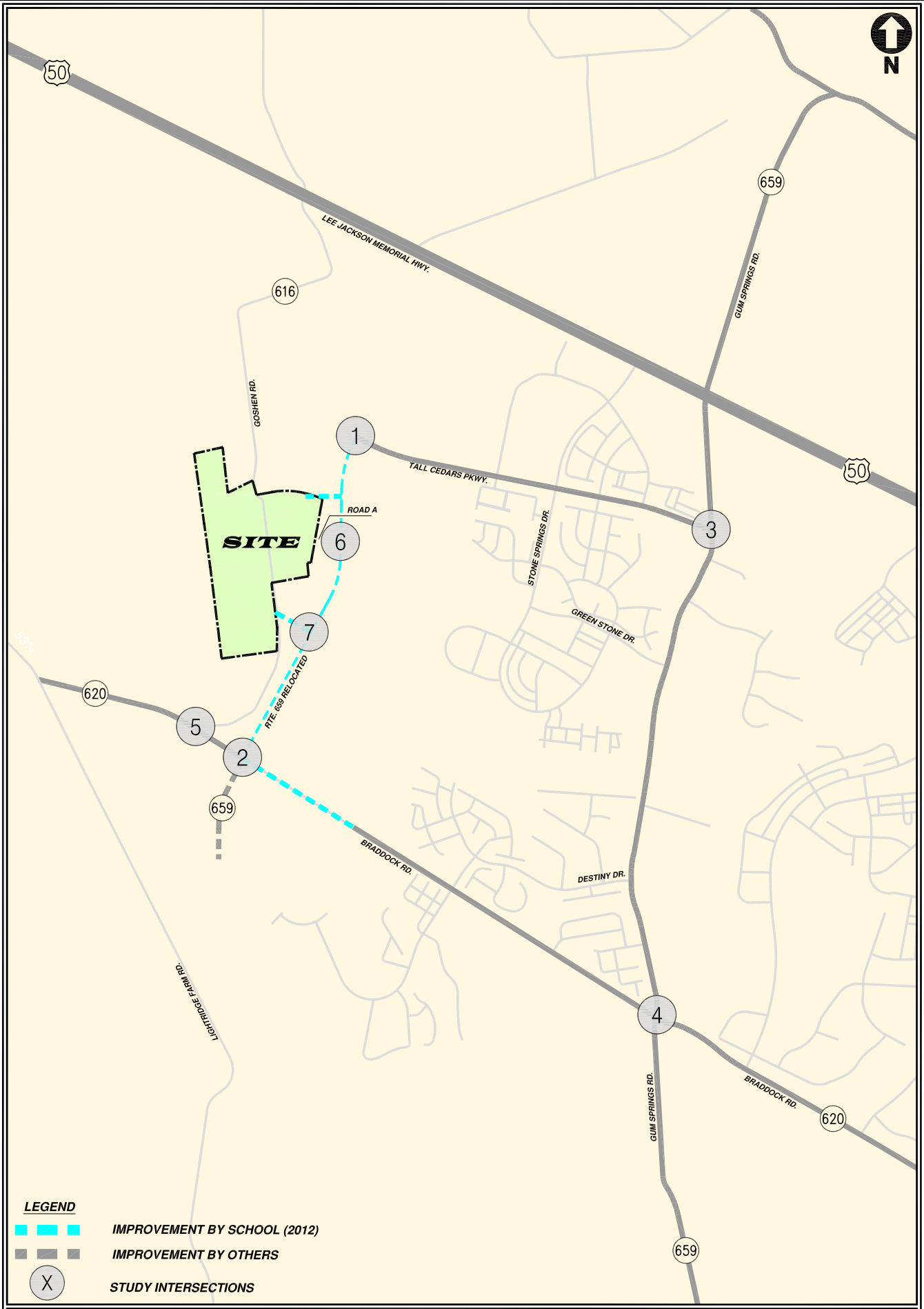

LCPS HS-7

Figure 7: Study Intersections

GOROVE / SLADE ASSOCIATES, Inc.
TRANSPORTATION, TRAFFIC, and PARKING
1140 Connecticut Avenue NW / Suite 700 / Washington, DC 20036 / (202) 296-8625
3914 Centreville Road / Suite 330 / Chantilly, VA 20151 / (703) 787-9595

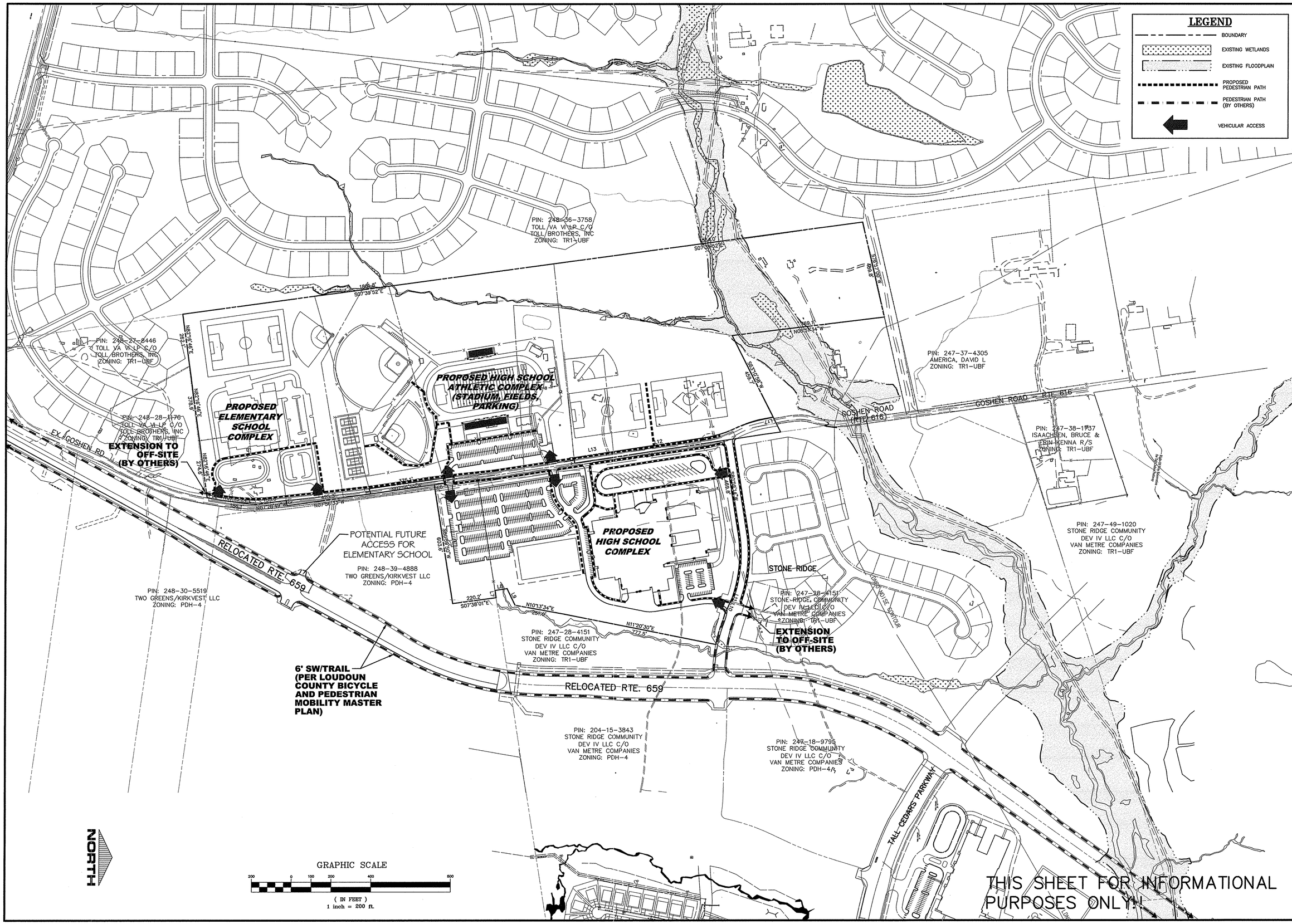

THIS SHEET FOR INFORMATIONAL PURPOSES ONLY!!

Bowman CONSULTING

Bowman Consulting Group, Ltd.
101 South Street, S. E.
Leesburg, Virginia 20175
Phone: (703) 443-2400
Fax: (703) 443-2425
www.bowmanconsulting.com
© Bowman Consulting Group, Ltd.

PEDESTRIAN CIRCULATION EXHIBIT
HS-7 DULLES SOUTH HIGH SCHOOL AND FUTURE ELEMENTARY SCHOOL, GOSHEN ROAD ASSEMBLAGE

COMMISSION PERMIT PLAT

DULLES ELECTION DISTRICT LOUDOUN COUNTY, VIRGINIA

PLAN STATUS	
DATE	DESCRIPTION

BR DESIGN	DEM DRAWN	CMM CHKD
SCALE	H: 1"=200' V:	
JOB No.	5185-01-002	
DATE	OCTOBER 14, 2009	
FILE No.	5185-D-ZP-001	
SHEET	7 OF 7	

Cad file name: \\Clyde\projects-planning\5185 - LCPS Goshen Road\5185-01-002 (zoning)\Planning\Rezoning\Sheets\5185-D-ZP-001-07-PED.dwg

SCOPE OF WORK MEETING

ADDITIONS TO THE REQUIRED ELEMENTS, CHANGES TO THE METHODOLOGY OR STANDARD ASSUMPTIONS, AND SIGNATURE PAGE

Any additions to the Required Elements or changes to the Methodology or Standard Assumptions due to special circumstances that are approved by VDOT:

- Traffic consultant to provide 2020 traffic forecast methodology (write-up) to VDOT and OTS for review
- Specific breakdown of ES DOA
- Check Loudoun Co. growth summary for background developments
- OTS to provide feedback on Route 659 and Tall Cedars Parkway intersection improvements
- 10% rule analysis to include Route 50 intersections.
- No PM Commuter Peak analysis
- Queuing analysis for Route 50 intersections if included in the study.

AGREED: _____ DATE: 11/18/09
Applicant or Consultant

PRINT NAME: TUSHAR ALWAR, GROVE/SLADE
Applicant or Consultant

SIGNED: _____ DATE: 11/18/09
VDOT Representative

PRINT NAME: ARUN RAJ
VDOT Representative

SIGNED: _____ DATE: 11/18/09
Local Government Representative

PRINT NAME: GEORGE PHILLIPS
Local Government Representative

APPENDIX B

EXISTING (2009) TRAFFIC VOLUMES & COUNT SHEETS

Gorove/Slade Associates

Project Name :	HS-7
Project # :	2110-013
Location	Loudoun County, VA
Data Source:	Gorove/Slade Associates

Date of Counts:	Thursday, November 19, 2009
Weather Conditions:	Light Rain

Intersection: **Goshen Road at Braddock Road**

AM PEAK

Direction:	Southbound				Westbound				Northbound				Eastbound			
Roadway:	**Goshen Rd.**				**Braddock Rd.**				**Goshen Rd.**				**Braddock Rd.**			
Movement:	Right	Thru	Left	Peds	Right	Thru	Left	Peds	Right	Thru	Left	Peds	Right	Thru	Left	Peds
6:00 AM to 6:15 AM	0	0	0	0	1	0	0	0	0	0	0	0	0	6	0	0
6:15 AM to 6:30 AM	0	2	0	0	1	1	1	0	2	1	0	0	0	9	0	0
6:30 AM to 6:45 AM	0	0	0	0	1	0	0	0	0	0	0	0	2	14	0	0
6:45 AM to 7:00 AM	0	0	1	0	1	1	0	0	0	0	0	0	0	15	5	0
7:00 AM to 7:15 AM	1	0	0	0	1	0	0	0	0	0	0	0	0	17	3	0
7:15 AM to 7:30 AM	0	0	1	0	0	0	0	0	0	0	0	0	0	21	4	0
7:30 AM to 7:45 AM	2	0	0	0	0	1	0	0	0	0	0	0	0	12	9	0
7:45 AM to 8:00 AM	0	0	1	0	2	6	0	0	0	0	0	0	0	16	6	0
8:00 AM to 8:15 AM	1	0	0	0	2	4	0	0	0	0	0	0	0	11	2	0
8:15 AM to 8:30 AM	0	0	0	0	0	1	0	0	0	0	0	0	0	10	8	0
8:30 AM to 8:45 AM	1	0	0	0	0	1	0	0	0	0	0	0	0	10	3	0
8:45 AM to 9:00 AM	1	0	0	0	0	5	0	0	0	0	0	0	0	2	2	0
9:00 AM to 9:15 AM	2	0	0	0	2	8	0	0	0	0	0	0	0	6	3	0
9:15 AM to 9:30 AM	0	0	0	0	2	7	0	0	0	0	0	0	0	7	3	0
9:30 AM to 9:45 AM																
9:45 AM to 10:00 AM																
10:00 AM to 10:15 AM																
10:15 AM to 10:30 AM																
10:30 AM to 10:45 AM																
10:45 AM to 11:00 AM																

COMMUTER PEAK HOUR

Direction:	Southbound				Westbound				Northbound				Eastbound			
Roadway:	**Goshen Rd.**				**Braddock Rd.**								**Braddock Rd.**			
Movement:	Right	Thru	Left	Peds	Right	Thru	Left	Peds	Right	Thru	Left	Peds	Right	Thru	Left	Peds
AM INTERSECTION PEAK HOUR																
7:00 AM to 8:00 AM	3	0	2	0	4	11	0	0	0	0	0	0	0	60	21	0
AM SYSTEM PEAK HOUR																
7:30 AM to 8:30 AM	3	0	1	0	4	12	0	0	0	0	0	0	0	49	25	0

PEAK HOUR FACTORS	Southbound				Westbound				Northbound				Eastbound			
	Goshen Rd.				**Braddock Rd.**				**Goshen Rd.**				**Braddock Rd.**			
	Right	Thru	Left	Peds	Right	Thru	Left	Peds	Right	Thru	Left	Peds	Right	Thru	Left	Peds
AM PEAK HOUR	0.38	0.00	0.50	N/A	0.50	0.46	0.00	N/A	0.00	0.00	0.00	N/A	0.00	0.71	0.58	N/A

SCHOOL PEAK HOUR

Direction:	Southbound				Westbound				Northbound				Eastbound			
Roadway:	**Goshen Rd.**				**Braddock Rd.**								**Braddock Rd.**			
Movement:	Right	Thru	Left	Peds	Right	Thru	Left	Peds	Right	Thru	Left	Peds	Right	Thru	Left	Peds
ES AM SCHOOL PEAK HOUR																
7:00 AM to 8:00 AM	3	0	2	0	3	7	0	0	0	0	0	0	0	66	22	0
HS AM SCHOOL PEAK HOUR																
8:00 AM to 9:00 AM	3	0	0	0	2	11	0	0	0	0	0	0	0	33	15	0

PEAK HOUR FACTORS	Southbound				Westbound				Northbound				Eastbound			
	Goshen Rd.				**Braddock Rd.**				**Goshen Rd.**				**Braddock Rd.**			
	Right	Thru	Left	**Approach**	Right	Thru	Left	**Approach**	Right	Thru	Left	**Approach**	Right	Thru	Left	**Approach**
ES AM SCHOOL PEAK HOUR																
7:00 AM to 8:00 AM	0.38	0.00	0.50	**0.63**	0.38	0.29	0.00	**0.31**	0.00	0.00	0.00	**0.00**	0.00	0.79	0.61	**0.88**
HS AM SCHOOL PEAK HOUR																
8:00 AM to 9:00 AM	0.75	0.00	0.00	**0.75**	0.25	0.55	0.00	**0.54**	0.00	0.00	0.00	**0.00**	0.00	0.75	0.47	**0.67**

AM INTERSECTION PEAK VOLUMES

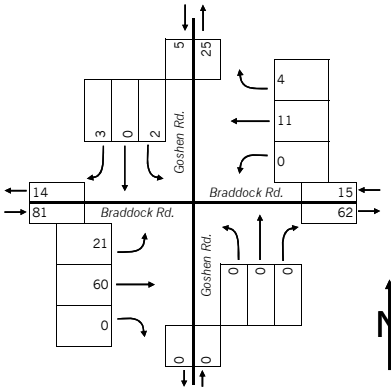

AM SYSTEM PEAK VOLUMES

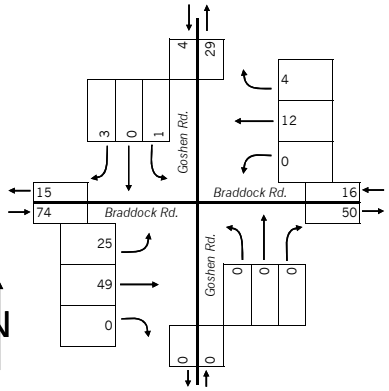

ES AM INTERSECTION PEAK VOLUMES

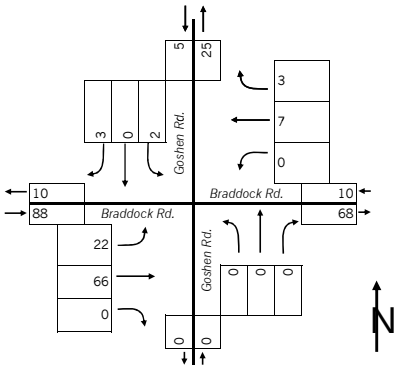

HS AM SYSTEM PEAK VOLUMES

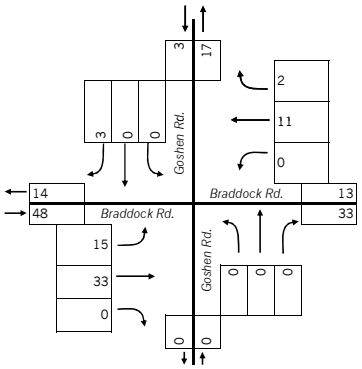

Gorove/Slade Associates

Project Name :	HS-7
Project # :	2110-013
Location	Loudoun County, VA
Data Source:	Gorove/Slade Associates

Date of Counts:	Thursday, November 19, 2009
Weather Conditions:	Light Rain

Intersection: **Braddock Road at Gum Spring Road**

AM PEAK

	Southbound				Westbound				Northbound				Eastbound			
Roadway:	**Gum Spring Rd.**				**Braddock Rd.**				**Gum Spring Rd.**				**Braddock Rd.**			
Movement:	Right	Thru	Left	Peds	Right	Thru	Left	Peds	Right	Thru	Left	Peds	Right	Thru	Left	Peds
6:00 AM to 6:15 AM	3	20	10	0	13	4	7	0	31	62	0	0	0	18	14	2
6:15 AM to 6:30 AM	1	25	10	0	4	7	8	0	43	63	1	0	0	17	5	0
6:30 AM to 6:45 AM	6	32	27	0	12	5	10	0	50	89	7	0	6	29	9	0
6:45 AM to 7:00 AM	9	34	33	0	9	7	9	0	47	79	5	0	4	28	20	1
7:00 AM to 7:15 AM	6	32	42	0	11	18	11	0	43	67	12	0	2	34	13	0
7:15 AM to 7:30 AM	9	25	50	0	24	27	17	0	42	52	6	0	6	69	14	0
7:30 AM to 7:45 AM	3	35	51	0	24	25	19	0	14	69	8	0	6	54	22	0
7:45 AM to 8:00 AM	8	28	39	0	31	15	17	0	36	70	7	0	4	61	9	1
8:00 AM to 8:15 AM	3	29	50	0	51	17	14	0	28	68	6	0	8	54	13	0
8:15 AM to 8:30 AM	4	27	63	0	59	13	18	0	28	57	2	0	5	64	16	0
8:30 AM to 8:45 AM	6	37	51	0	29	13	35	0	18	50	6	0	8	66	15	0
8:45 AM to 9:00 AM	7	44	43	0	24	26	15	0	32	50	6	0	4	58	11	0
9:00 AM to 9:15 AM	3	28	13	0	24	21	19	1	27	48	6	0	4	23	14	0
9:15 AM to 9:30 AM	4	26	15	0	14	14	12	0	21	28	3	0	4	25	6	0
9:30 AM to 9:45 AM																
9:45 AM to 10:00 AM																
10:00 AM to 10:15 AM																
10:15 AM to 10:30 AM																
10:30 AM to 10:45 AM																
10:45 AM to 11:00 AM																

COMMUTER PEAK HOUR

	Southbound				Westbound				Northbound				Eastbound			
Roadway:	**Gum Spring Rd.**				**Braddock Rd.**				**Gum Spring Rd.**				**Braddock Rd.**			
Movement:	Right	Thru	Left	Peds	Right	Thru	Left	Peds	Right	Thru	Left	Peds	Right	Thru	Left	Peds
AM INTERSECTION PEAK HOUR																
7:45 AM to 8:45 AM	23	117	190	0	130	84	67	0	120	259	27	0	24	238	58	1
AM SYSTEM PEAK HOUR																
7:30 AM to 8:30 AM	18	119	203	0	165	70	68	0	106	264	23	0	23	233	60	1

PEAK HOUR FACTORS

	Southbound				Westbound				Northbound				Eastbound			
	Gum Spring Rd.				**Braddock Rd.**				**Gum Spring Rd.**				**Braddock Rd.**			
	Right	Thru	Left	Peds	Right	Thru	Left	Peds	Right	Thru	Left	Peds	Right	Thru	Left	Peds
AM PEAK HOUR	0.72	0.79	0.75	N/A	0.55	1.24	0.48	N/A	0.83	0.93	0.96	N/A	0.75	0.90	0.91	N/A

SCHOOL PEAK HOUR

	Southbound				Westbound				Northbound				Eastbound			
Roadway:	**Gum Spring Rd.**				**Braddock Rd.**				**Gum Spring Rd.**				**Braddock Rd.**			
Movement:	Right	Thru	Left	Peds	Right	Thru	Left	Peds	Right	Thru	Left	Peds	Right	Thru	Left	Peds
ES AM SCHOOL PEAK HOUR																
7:00 AM to 8:00 AM	26	120	182	0	90	85	64	0	135	258	33	0	18	218	58	1
HS AM SCHOOL PEAK HOUR																
8:00 AM to 9:00 AM	20	137	207	0	163	69	82	0	106	225	20	0	25	242	55	0

PEAK HOUR FACTORS

	Southbound				Westbound				Northbound				Eastbound			
	Gum Spring Rd.				**Braddock Rd.**				**Gum Spring Rd.**				**Braddock Rd.**			
	Right	Thru	Left	**Approach**	Right	Thru	Left	**Approach**	Right	Thru	Left	**Approach**	Right	Thru	Left	**Approach**
ES AM SCHOOL PEAK HOUR																
7:00 AM to 8:00 AM	0.72	0.86	0.89	**0.92**	0.73	0.79	0.84	**0.88**	0.78	0.92	0.69	**0.87**	0.75	0.79	0.66	**0.83**
HS AM SCHOOL PEAK HOUR																
8:00 AM to 9:00 AM	0.71	0.78	0.82	**0.97**	0.69	0.66	0.59	**0.87**	0.83	0.83	0.83	**0.86**	0.78	0.92	0.86	**0.90**

AM INTERSECTION PEAK VOLUMES

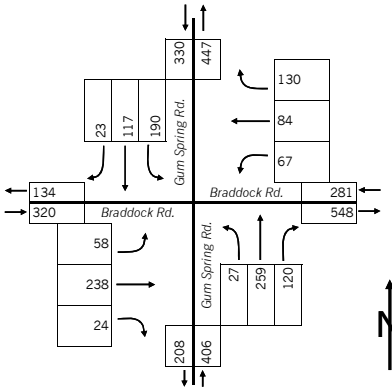

AM SYSTEM PEAK VOLUMES

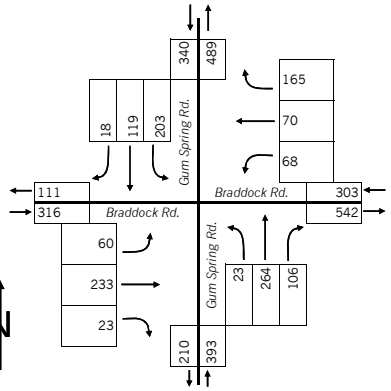

ES AM INTERSECTION PEAK VOLUMES

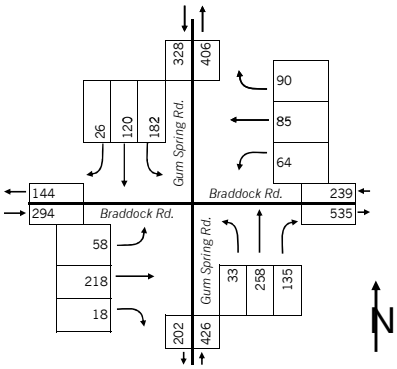

HS AM SYSTEM PEAK VOLUMES

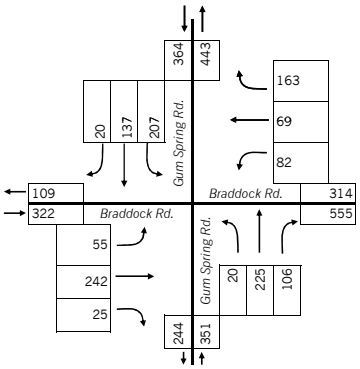

Gorove/Slade Associates

Project Name :	HS-7
Project # :	2110-013
Location	Loudoun County, VA
Data Source:	Gorove/Slade Associates

Date of Counts:	Thursday, November 19, 2009
Weather Conditions:	Light Rain

Intersection: **Goshen Road at Route 50 and Fleetwood Road**

AM PEAK

Direction:	Southbound				Westbound				Northbound				Eastbound			
Roadway:	**Fleetwood Rd.**				**Rte. 50**				**Goshen Rd.**				**Rte. 50**			
Movement:	Right	Thru	Left	Peds	Right	Thru	Left	Peds	Right	Thru	Left	Peds	Right	Thru	Left	Peds
6:00 AM to 6:15 AM	0	0	0	1	0	25	0	0	2	0	0	0	0	204	0	0
6:15 AM to 6:30 AM	0	0	0	0	0	32	3	0	2	0	0	0	3	311	0	0
6:30 AM to 6:45 AM	0	0	0	0	0	57	2	0	4	0	1	0	1	297	2	0
6:45 AM to 7:00 AM	1	0	1	0	1	43	4	0	4	1	0	0	0	276	2	0
7:00 AM to 7:15 AM	0	0	3	0	0	58	3	0	5	2	0	0	1	279	2	0
7:15 AM to 7:30 AM	0	1	0	0	3	72	1	0	5	4	0	0	0	287	4	0
7:30 AM to 7:45 AM	0	0	2	0	4	64	2	0	5	1	1	0	2	258	7	0
7:45 AM to 8:00 AM	0	0	0	0	5	103	4	0	1	7	1	0	1	223	1	0
8:00 AM to 8:15 AM	0	1	0	0	6	79	4	0	1	3	2	0	1	224	3	0
8:15 AM to 8:30 AM	0	0	1	0	1	86	2	0	8	2	0	0	0	213	2	0
8:30 AM to 8:45 AM	0	0	3	0	3	90	8	0	5	1	0	0	4	188	3	0
8:45 AM to 9:00 AM	0	0	0	0	1	83	5	0	10	2	1	0	3	177	1	0
9:00 AM to 9:15 AM	0	0	0	0	0	73	2	0	2	0	1	0	1	123	1	0
9:15 AM to 9:30 AM	0	0	0	0	1	58	3	0	2	1	0	0	1	114	0	0
9:30 AM to 9:45 AM																
9:45 AM to 10:00 AM																
10:00 AM to 10:15 AM																
10:15 AM to 10:30 AM																
10:30 AM to 10:45 AM																
10:45 AM to 11:00 AM																

COMMUTER PEAK HOUR

Direction:	Southbound				Westbound				Northbound				Eastbound			
Roadway:	**Fleetwood Rd.**				**Rte. 50**				**Goshen Rd.**				**Rte. 50**			
Movement:	Right	Thru	Left	Peds	Right	Thru	Left	Peds	Right	Thru	Left	Peds	Right	Thru	Left	Peds
AM INTERSECTION PEAK HOUR																
6:30 AM to 7:30 AM	0	2	2	0	18	318	11	0	12	15	4	0	4	992	15	0
AM SYSTEM PEAK HOUR																
7:30 AM to 8:30 AM	0	1	3	0	16	332	12	0	15	13	4	0	4	918	13	0

PEAK HOUR FACTORS

	Southbound				Westbound				Northbound				Eastbound			
	Fleetwood Rd.				**Rte. 50**				**Goshen Rd.**				**Rte. 50**			
	Right	Thru	Left	Peds	Right	Thru	Left	Peds	Right	Thru	Left	Peds	Right	Thru	Left	Peds
AM PEAK HOUR	0.00	0.50	0.17	N/A	1.50	1.10	0.69	N/A	0.60	0.94	1.00	N/A	1.00	0.84	0.94	N/A

SCHOOL PEAK HOUR

Direction:	Southbound				Westbound				Northbound				Eastbound			
Roadway:	**Fleetwood Rd.**				**Rte. 50**								**Rte. 50**			
Movement:	Right	Thru	Left	Peds	Right	Thru	Left	Peds	Right	Thru	Left	Peds	Right	Thru	Left	Peds
ES AM SCHOOL PEAK HOUR																
7:00 AM to 8:00 AM	0	1	5	0	12	297	10	0	16	14	2	0	4	1047	14	0
HS AM SCHOOL PEAK HOUR																
8:00 AM to 9:00 AM	0	1	4	0	11	338	19	0	24	8	3	0	8	802	9	0

PEAK HOUR FACTORS

	Southbound				Westbound				Northbound				Eastbound			
	Fleetwood Rd.				**Rte. 50**				**Goshen Rd.**				**Rte. 50**			
	Right	Thru	Left	**Approach**	Right	Thru	Left	**Approach**	Right	Thru	Left	**Approach**	Right	Thru	Left	**Approach**
ES AM SCHOOL PEAK HOUR																
7:00 AM to 8:00 AM	0.00	0.25	0.42	**0.50**	0.60	0.72	0.63	**0.71**	0.80	0.50	0.50	**0.89**	0.50	0.91	0.50	**0.91**
HS AM SCHOOL PEAK HOUR																
8:00 AM to 9:00 AM	0.00	0.25	0.33	**0.42**	0.46	0.94	0.59	**0.91**	0.60	0.67	0.38	**0.67**	0.50	0.90	0.75	**0.90**

AM INTERSECTION PEAK VOLUMES

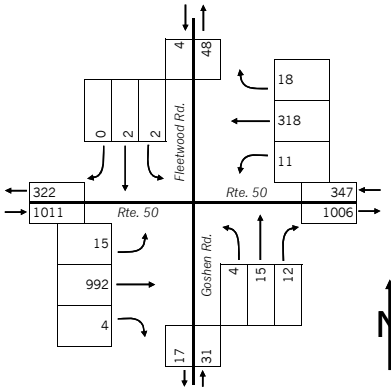

AM SYSTEM PEAK VOLUMES

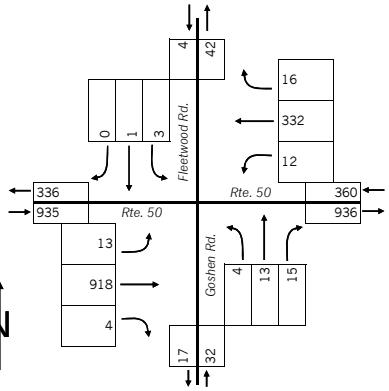

ES AM INTERSECTION PEAK VOLUMES

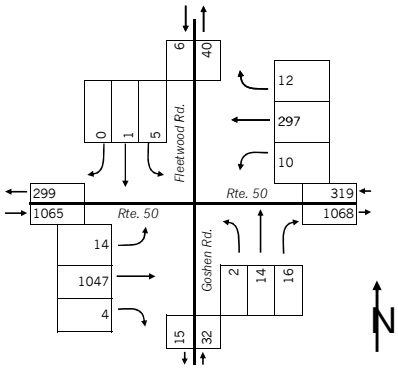

HS AM SYSTEM PEAK VOLUMES

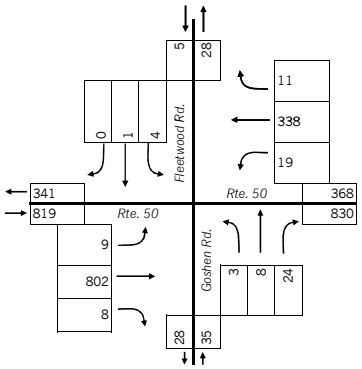

Gorove/Slade Associates

Project Name :	HS-7
Project # :	2110-013
Location	Loudoun County, VA
Data Source:	Gorove/Slade Associates

Date of Counts:	Thursday, November 19, 2009
Weather Conditions:	Light Rain

Intersection: **Tall Cedars Parkway at Gum Spring Road**

AM PEAK

	Southbound				Westbound				Northbound				Eastbound			
Roadway:	**Gum Spring Rd.**				**No Approach**				**Gum Spring Rd.**				**Tall Cedars Pky.**			
Movement:	Right	Thru	Left	Peds	Right	Thru	Left	Peds	Right	Thru	Left	Peds	Right	Thru	Left	Peds
6:00 AM to 6:15 AM	3	29	0	1	0	0	0	0	91	34	20	0	9	0	3	0
6:15 AM to 6:30 AM	2	37	0	0	0	0	0	0	77	42	8	0	3	0	5	0
6:30 AM to 6:45 AM	0	52	0	0	0	0	0	0	94	59	14	0	6	0	3	0
6:45 AM to 7:00 AM	8	63	0	0	0	0	0	0	104	62	22	0	13	0	2	0
7:00 AM to 7:15 AM	3	43	0	0	0	0	0	0	62	57	7	0	22	0	6	0
7:15 AM to 7:30 AM	16	56	0	0	0	0	0	0	75	54	24	0	16	0	5	0
7:30 AM to 7:45 AM	6	54	0	0	0	0	0	0	88	76	17	0	15	0	16	0
7:45 AM to 8:00 AM	3	66	0	0	0	0	0	0	97	76	18	0	12	0	11	0
8:00 AM to 8:15 AM	3	64	0	0	0	0	0	0	77	81	14	0	12	0	0	0
8:15 AM to 8:30 AM	1	73	0	0	0	0	0	0	86	70	6	2	16	0	4	0
8:30 AM to 8:45 AM	1	51	0	0	0	0	0	0	103	61	11	0	10	0	15	0
8:45 AM to 9:00 AM	6	72	0	0	0	0	0	0	82	54	4	0	17	0	4	0
9:00 AM to 9:15 AM	3	39	0	0	0	0	0	0	70	64	8	0	7	0	7	0
9:15 AM to 9:30 AM	8	59	0	0	0	0	0	0	58	50	8	0	7	0	5	0
9:30 AM to 9:45 AM																
9:45 AM to 10:00 AM																
10:00 AM to 10:15 AM																
10:15 AM to 10:30 AM																
10:30 AM to 10:45 AM																
10:45 AM to 11:00 AM																

COMMUTER PEAK HOUR

	Southbound				Westbound				Northbound				Eastbound			
Roadway:	**Gum Spring Rd.**				**No Approach**				**Gum Spring Rd.**				**Tall Cedars Pky.**			
Movement:	Right	Thru	Left	Peds	Right	Thru	Left	Peds	Right	Thru	Left	Peds	Right	Thru	Left	Peds
AM INTERSECTION PEAK HOUR																
7:30 AM to 8:30 AM	28	240	0	0	0	0	0	0	337	287	73	0	55	0	32	0
AM SYSTEM PEAK HOUR																
7:30 AM to 8:30 AM	13	257	0	0	0	0	0	0	348	303	55	2	55	0	31	0

PEAK HOUR FACTORS

	Southbound				Westbound				Northbound				Eastbound			
	Gum Spring Rd.				**No Approach**				**Gum Spring Rd.**				**Tall Cedars Pky.**			
	Right	Thru	Left	Peds	Right	Thru	Left	Peds	Right	Thru	Left	Peds	Right	Thru	Left	Peds
AM PEAK HOUR	1.17	0.82	0.00	N/A	0.00	0.00	0.00	N/A	0.87	0.89	1.01	N/A	0.86	0.00	0.50	N/A

SCHOOL PEAK HOUR

	Southbound				Westbound				Northbound				Eastbound			
Roadway:	**Gum Spring Rd.**				**No Approach**				**Gum Spring Rd.**				**Tall Cedars Pky.**			
Movement:	Right	Thru	Left	Peds	Right	Thru	Left	Peds	Right	Thru	Left	Peds	Right	Thru	Left	Peds
ES AM SCHOOL PEAK HOUR																
7:00 AM to 8:00 AM	28	219	0	0	0	0	0	0	322	263	66	0	65	0	38	0
HS AM SCHOOL PEAK HOUR																
8:00 AM to 9:00 AM	11	260	0	0	0	0	0	0	348	266	35	2	55	0	23	0

PEAK HOUR FACTORS

	Southbound				Westbound				Northbound				Eastbound			
	Gum Spring Rd.				**No Approach**				**Gum Spring Rd.**				**Tall Cedars Pky.**			
	Right	Thru	Left	**Approach**	Right	Thru	Left	**Approach**	Right	Thru	Left	**Approach**	Right	Thru	Left	**Approach**
ES AM SCHOOL PEAK HOUR																
7:00 AM to 8:00 AM	0.44	0.83	0.00	**0.86**	0.00	0.00	0.00	**0.00**	0.83	0.87	0.69	**0.85**	0.74	0.00	0.59	**0.83**
HS AM SCHOOL PEAK HOUR																
8:00 AM to 9:00 AM	0.46	0.89	0.00	**0.87**	0.00	0.00	0.00	**0.00**	0.84	0.82	0.63	**0.93**	0.81	0.00	0.38	**0.78**

AM INTERSECTION PEAK VOLUMES

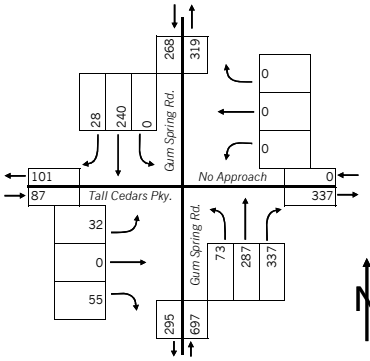

AM SYSTEM PEAK VOLUMES

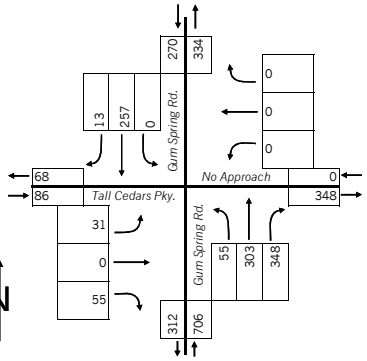

ES AM INTERSECTION PEAK VOLUMES

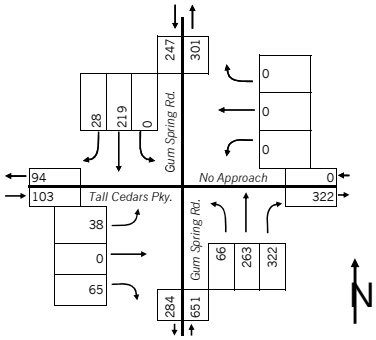

HS AM SYSTEM PEAK VOLUMES

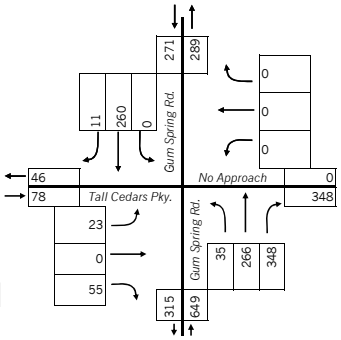

Gorove/Slade Associates

Project Name :	HS-7
Project # :	2110-013
Location	Loudoun County, VA
Data Source:	Gorove/Slade Associates

Date of Counts:	Thursday, November 19, 2009
Weather Conditions:	Light Rain

Intersection: **Goshen Road at Braddock Road**

PM PEAK																
Direction:	Southbound				Westbound				Northbound				Eastbound			
Roadway:	**Goshen Rd.**				**Braddock Rd.**				**Goshen Rd.**				**Braddock Rd.**			
Movement:	Right	Thru	Left	Peds	Right	Thru	Left	Peds	Right	Thru	Left	Peds	Right	Thru	Left	Peds
2:00 PM to 2:15 PM	1	0	0	0	1	7	0	0	0	0	0	0	0	6	0	0
2:15 PM to 2:30 PM	2	0	0	0	0	5	0	0	0	0	0	0	0	1	0	0
2:30 PM to 2:45 PM	0	0	0	0	0	6	0	0	0	0	0	0	0	1	2	0
2:45 PM to 3:00 PM	1	0	0	0	0	8	0	0	0	0	0	0	0	3	0	0
3:00 PM to 3:15 PM	1	0	0	0	1	7	0	0	0	0	0	0	0	6	1	0
3:15 PM to 3:30 PM	2	0	0	0	0	8	0	0	0	0	0	0	0	4	0	0
3:30 PM to 3:45 PM	2	0	0	0	0	4	0	0	0	0	0	0	0	5	1	0
3:45 PM to 4:00 PM	3	0	0	0	0	10	0	0	0	0	0	0	0	2	0	0
4:00 PM to 4:15 PM	4	0	0	0	0	8	0	0	0	0	0	0	0	2	1	0
4:15 PM to 4:30 PM	2	0	0	0	0	5	0	0	0	0	0	0	0	3	1	0
4:30 PM to 4:45 PM	4	0	1	0	0	9	0	0	0	0	0	0	0	5	1	0
4:45 PM to 5:00 PM	7	0	1	0	1	15	0	0	0	0	0	0	0	0	0	0
5:00 PM to 5:15 PM	4	0	1	0	0	11	0	0	0	0	0	0	0	2	0	0
5:15 PM to 5:30 PM	3	0	0	0	1	7	0	0	0	0	0	0	0	1	0	0
5:30 PM to 5:45 PM	3	0	2	0	0	2	0	0	0	0	0	0	0	3	0	0
5:45 PM to 6:00 PM	6	0	0	0	1	7	0	0	0	0	0	0	0	0	0	0
6:00 PM to 6:15 PM	2	0	0	0	0	4	0	0	0	0	0	0	0	1	0	0
6:15 PM to 6:30 PM	2	0	0	0	0	5	0	0	0	0	0	0	0	2	0	0
6:30 PM to 6:45 PM	2	0	0	0	0	4	0	0	0	0	0	0	0	1	0	0
6:45 PM to 7:00 PM	1	0	0	0	0	2	0	0	0	0	0	0	0	1	0	0

COMMUTER PEAK HOUR																
Direction:	Southbound				Westbound				Northbound				Eastbound			
Roadway:	**Goshen Rd.**				**Braddock Rd.**				**Goshen Rd.**				**Braddock Rd.**			
Movement:	Right	Thru	Left	Peds	Right	Thru	Left	Peds	Right	Thru	Left	Peds	Right	Thru	Left	Peds
PM INTERSECTION PEAK HOUR																
4:30 PM to 5:30 PM	18	0	3	0	2	42	0	0	0	0	0	0	0	8	1	0
PM SYSTEM PEAK HOUR																
4:30 PM to 5:30 PM	18	0	3	0	2	42	0	0	0	0	0	0	0	8	1	0

PEAK HOUR FACTORS	Southbound				Westbound				Northbound				Eastbound			
	Goshen Rd.				**Braddock Rd.**				**Goshen Rd.**				**Braddock Rd.**			
	Right	Thru	Left	Peds	Right	Thru	Left	Peds	Right	Thru	Left	Peds	Right	Thru	Left	Peds
PM PEAK HOUR	0.64	0.00	0.75	N/A	0.50	0.70	0.00	N/A	0.00	0.00	0.00	N/A	0.00	0.40	0.25	N/A

SCHOOL PEAK HOUR																
Direction:	Southbound				Westbound				Northbound				Eastbound			
Roadway:	**Goshen Rd.**				**Braddock Rd.**				**Goshen Rd.**				**Braddock Rd.**			
Movement:	Right	Thru	Left	Peds	Right	Thru	Left	Peds	Right	Thru	Left	Peds	Right	Thru	Left	Peds
ES PM SCHOOL PEAK HOUR																
2:15 PM to 3:15 PM	4	0	0	0	1	26	0	0	0	0	0	0	0	11	3	0
HS PM SCHOOL PEAK HOUR																
3:30 PM to 4:30 PM	11	0	0	0	0	27	0	0	0	0	0	0	0	12	3	0

PEAK HOUR FACTORS	Southbound				Westbound				Northbound				Eastbound			
	Goshen Rd.				**Braddock Rd.**				**Goshen Rd.**				**Braddock Rd.**			
	Right	Thru	Left	**Approach**	Right	Thru	Left	**Approach**	Right	Thru	Left	**Approach**	Right	Thru	Left	**Approach**
ES PM SCHOOL PEAK HOUR																
2:15 PM to 3:15 PM	0.50	0.00	0.00	**0.50**	0.25	0.81	0.00	**0.84**	0.00	0.00	0.00	**0.00**	0.00	0.46	0.38	**0.50**
HS PM SCHOOL PEAK HOUR																
3:30 PM to 4:30 PM	0.69	0.00	0.00	**0.69**	0.00	0.68	0.00	**0.68**	0.00	0.00	0.00	**0.00**	0.00	0.60	0.75	**0.63**

PM INTERSECTION PEAK VOLUMES

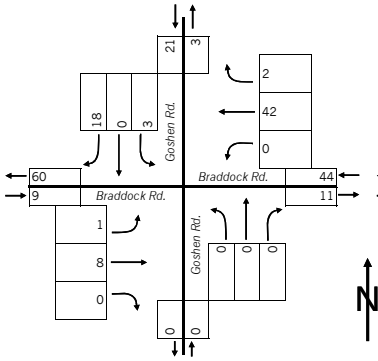

PM SYSTEM PEAK VOLUMES

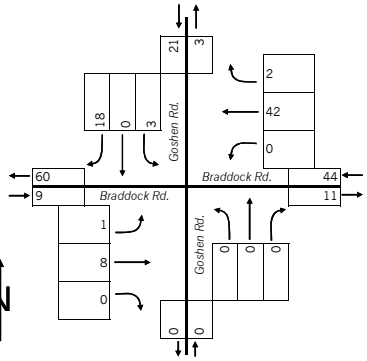

ES PM INTERSECTION PEAK VOLUMES

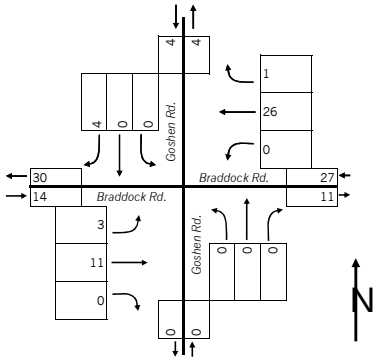

HS PM SYSTEM PEAK VOLUMES

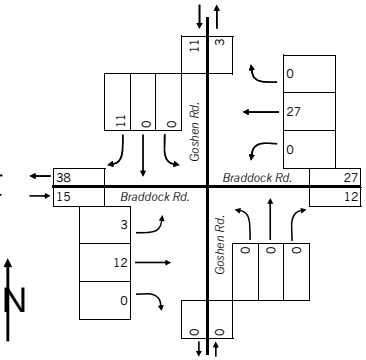

Gorove/Slade Associates

Project Name :	HS-7
Project # :	2110-013
Location	Loudoun County, VA
Data Source:	Gorove/Slade Associates

Date of Counts:	Thursday, November 19, 2009
Weather Conditions:	Light Rain

Intersection: **Braddock Road at Gum Spring Road**

PM PEAK																
Direction:	Southbound				Westbound				Northbound				Eastbound			
Roadway:	**Gum Spring Rd.**				**Braddock Rd.**				**Gum Spring Rd.**				**Braddock Rd.**			
Movement:	Right	Thru	Left	Peds	Right	Thru	Left	Peds	Right	Thru	Left	Peds	Right	Thru	Left	Peds
2:00 PM to 2:15 PM	9	55	15	0	15	13	20	3	10	29	3	0	8	20	12	0
2:15 PM to 2:30 PM	6	74	18	0	23	18	20	9	11	29	7	0	2	10	8	0
2:30 PM to 2:45 PM	3	49	11	1	21	33	18	4	13	27	5	0	6	14	14	0
2:45 PM to 3:00 PM	2	47	13	0	23	38	16	1	10	30	4	0	12	29	19	0
3:00 PM to 3:15 PM	8	49	9	0	11	18	26	0	11	36	2	0	11	14	9	0
3:15 PM to 3:30 PM	2	42	8	0	12	16	24	0	15	30	3	0	4	17	17	0
3:30 PM to 3:45 PM	2	49	17	0	10	18	17	4	12	33	4	0	8	16	16	0
3:45 PM to 4:00 PM	3	66	22	0	24	22	26	2	15	29	6	0	10	31	11	0
4:00 PM to 4:15 PM	4	63	17	0	25	24	33	2	17	22	5	0	7	14	13	0
4:15 PM to 4:30 PM	3	79	4	0	20	21	52	0	14	38	6	0	10	11	13	0
4:30 PM to 4:45 PM	2	65	19	0	10	22	68	1	18	46	5	0	9	18	5	0
4:45 PM to 5:00 PM	3	90	5	0	21	49	52	3	17	35	5	0	8	10	3	0
5:00 PM to 5:15 PM	1	72	13	0	23	34	35	2	15	37	3	0	5	18	5	0
5:15 PM to 5:30 PM	2	87	16	0	16	31	47	1	19	30	2	0	7	26	6	0
5:30 PM to 5:45 PM	5	58	42	0	17	20	31	0	23	37	3	0	4	16	2	0
5:45 PM to 6:00 PM	6	84	17	0	30	58	40	0	15	28	3	0	4	10	4	0
6:00 PM to 6:15 PM	3	45	13	0	20	28	32	8	19	33	5	0	5	17	16	0
6:15 PM to 6:30 PM	1	46	16	0	29	30	38	16	12	17	6	0	4	19	5	0
6:30 PM to 6:45 PM	6	85	17	0	35	50	47	0	14	16	3	0	2	15	8	0
6:45 PM to 7:00 PM	5	40	12	0	24	27	25	6	11	21	1	0	0	22	4	0

COMMUTER PEAK HOUR																
Direction:	Southbound				Westbound				Northbound				Eastbound			
Roadway:	**Gum Spring Rd.**				**Braddock Rd.**				**Gum Spring Rd.**				**Braddock Rd.**			
Movement:	Right	Thru	Left	Peds	Right	Thru	Left	Peds	Right	Thru	Left	Peds	Right	Thru	Left	Peds
PM INTERSECTION PEAK HOUR																
4:30 PM to 5:30 PM	8	314	53	0	70	136	202	7	69	148	15	0	29	72	19	0
PM SYSTEM PEAK HOUR																
4:30 PM to 5:30 PM	8	314	53	0	70	136	202	7	69	148	15	0	29	72	19	0

PEAK HOUR FACTORS	Southbound				Westbound				Northbound				Eastbound			
	Gum Spring Rd.				**Braddock Rd.**				**Gum Spring Rd.**				**Braddock Rd.**			
	Right	Thru	Left	Peds	Right	Thru	Left	Peds	Right	Thru	Left	Peds	Right	Thru	Left	Peds
PM PEAK HOUR	0.67	0.87	0.70	N/A	0.76	0.69	0.74	N/A	0.91	0.80	0.75	N/A	0.81	0.69	0.79	N/A

SCHOOL PEAK HOUR																
Direction:	Southbound				Westbound				Northbound				Eastbound			
Roadway:	**Gum Spring Rd.**				**Braddock Rd.**				**Gum Spring Rd.**				**Braddock Rd.**			
Movement:	Right	Thru	Left	Peds	Right	Thru	Left	Peds	Right	Thru	Left	Peds	Right	Thru	Left	Peds
ES PM SCHOOL PEAK HOUR																
2:15 PM to 3:15 PM	19	219	51	1	78	107	80	14	45	122	18	0	31	67	50	0
HS PM SCHOOL PEAK HOUR																
3:30 PM to 4:30 PM	12	257	60	0	79	85	128	8	58	122	21	0	35	72	53	0

PEAK HOUR FACTORS	Southbound				Westbound				Northbound				Eastbound			
	Gum Spring Rd.				**Braddock Rd.**				**Gum Spring Rd.**				**Braddock Rd.**			
	Right	Thru	Left	**Approach**	Right	Thru	Left	**Approach**	Right	Thru	Left	**Approach**	Right	Thru	Left	**Approach**
ES PM SCHOOL PEAK HOUR																
2:15 PM to 3:15 PM	0.59	0.74	0.71	**0.74**	0.85	0.70	0.77	**0.86**	0.87	0.85	0.64	**0.94**	0.65	0.58	0.66	**0.62**
HS PM SCHOOL PEAK HOUR																
3:30 PM to 4:30 PM	0.75	0.81	0.68	**0.90**	0.79	0.89	0.62	**0.78**	0.85	0.80	0.88	**0.87**	0.88	0.58	0.83	**0.77**

PM INTERSECTION PEAK VOLUMES

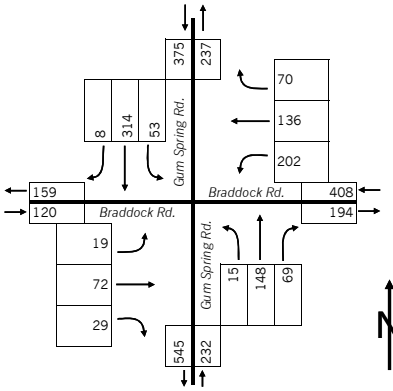

PM SYSTEM PEAK VOLUMES

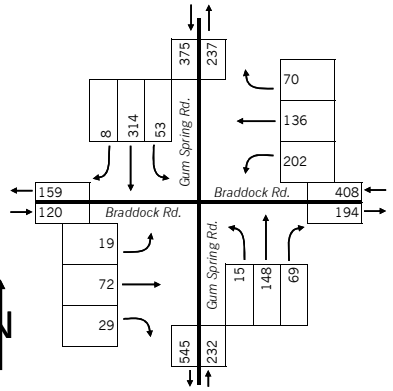

ES PM INTERSECTION PEAK VOLUMES

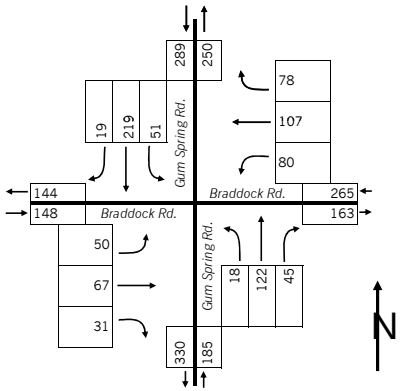

HS PM SYSTEM PEAK VOLUMES

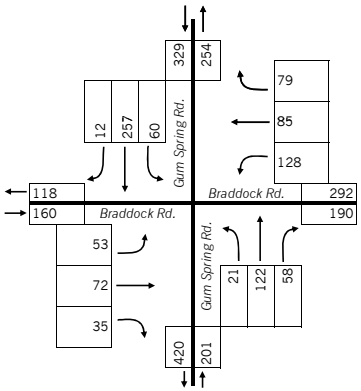

Gorove/Slade Associates

Project Name :	HS-7
Project # :	2110-013
Location	Loudoun County, VA
Data Source:	Gorove/Slade Associates

Date of Counts:	Thursday, November 19, 2009
Weather Conditions:	Light Rain

Intersection: **Goshen Road at Route 50 and Fleetwood Road**

PM PEAK																
Direction:	Southbound				Westbound				Northbound				Eastbound			
Roadway:	**Fleetwood Rd.**				**Rte. 50**				**Goshen Rd.**				**Rte. 50**			
Movement:	Right	Thru	Left	Peds	Right	Thru	Left	Peds	Right	Thru	Left	Peds	Right	Thru	Left	Peds
2:00 PM to 2:15 PM	1	0	1	0	2	99	3	0	2	0	0	0	0	87	0	0
2:15 PM to 2:30 PM	0	1	1	0	0	134	1	0	1	0	1	0	1	86	0	0
2:30 PM to 2:45 PM	1	0	0	0	0	158	2	0	2	0	0	0	0	67	2	0
2:45 PM to 3:00 PM	0	0	0	0	0	181	6	0	0	1	1	0	1	78	2	0
3:00 PM to 3:15 PM	1	2	0	0	2	179	2	0	2	0	0	0	1	79	0	0
3:15 PM to 3:30 PM	1	1	1	0	2	232	3	0	2	0	3	0	0	74	0	0
3:30 PM to 3:45 PM	1	2	0	0	0	231	0	0	2	1	1	0	1	75	0	0
3:45 PM to 4:00 PM	2	2	0	0	1	234	2	0	2	0	0	0	1	72	1	0
4:00 PM to 4:15 PM	1	2	1	0	2	271	6	0	4	0	0	0	2	64	0	0
4:15 PM to 4:30 PM	0	1	0	0	1	297	6	0	6	0	0	0	0	61	0	0
4:30 PM to 4:45 PM	0	2	1	0	0	272	4	0	0	1	2	0	0	78	0	0
4:45 PM to 5:00 PM	4	1	0	0	1	257	7	0	1	0	1	0	2	54	0	0
5:00 PM to 5:15 PM	1	1	0	0	4	252	3	0	0	0	0	0	0	89	1	0
5:15 PM to 5:30 PM	1	2	3	0	2	271	4	0	0	0	0	0	0	77	0	0
5:30 PM to 5:45 PM	1	3	0	0	1	239	4	0	0	0	0	0	0	62	0	0
5:45 PM to 6:00 PM	2	3	0	0	1	220	5	0	5	0	0	0	1	64	2	0
6:00 PM to 6:15 PM	2	1	1	0	1	196	2	0	1	1	4	0	1	55	0	0
6:15 PM to 6:30 PM	2	0	0	0	2	199	4	0	1	0	0	0	0	69	0	0
6:30 PM to 6:45 PM	3	1	1	0	1	194	4	0	1	0	0	0	0	54	0	0
6:45 PM to 7:00 PM	0	0	0	0	0	171	4	0	0	0	0	0	0	47	0	0

COMMUTER PEAK HOUR																
Direction:	Southbound				Westbound				Northbound				Eastbound			
Roadway:	**Fleetwood Rd.**				**Rte. 50**				**Goshen Rd.**				**Rte. 50**			
Movement:	Right	Thru	Left	Peds	Right	Thru	Left	Peds	Right	Thru	Left	Peds	Right	Thru	Left	Peds
PM INTERSECTION PEAK HOUR																
4:00 PM to 5:00 PM	5	6	2	0	4	1097	23	0	11	1	3	0	4	257	0	0
PM SYSTEM PEAK HOUR																
4:30 PM to 5:30 PM	6	6	4	0	7	1052	18	0	1	1	3	0	2	298	1	0

PEAK HOUR FACTORS	Southbound				Westbound				Northbound				Eastbound			
	Fleetwood Rd.				**Rte. 50**				**Goshen Rd.**				**Rte. 50**			
	Right	Thru	Left	Peds	Right	Thru	Left	Peds	Right	Thru	Left	Peds	Right	Thru	Left	Peds
PM PEAK HOUR	0.31	0.75	0.50	N/A	0.50	0.92	0.82	N/A	0.46	0.25	0.38	N/A	0.50	0.82	0.00	N/A

SCHOOL PEAK HOUR																
Direction:	Southbound				Westbound				Northbound				Eastbound			
Roadway:	**Fleetwood Rd.**				**Rte. 50**				**Goshen Rd.**				**Rte. 50**			
Movement:	Right	Thru	Left	Peds	Right	Thru	Left	Peds	Right	Thru	Left	Peds	Right	Thru	Left	Peds
ES PM SCHOOL PEAK HOUR																
2:15 PM to 3:15 PM	2	3	1	0	2	652	11	0	5	1	2	0	3	310	4	0
HS PM SCHOOL PEAK HOUR																
3:30 PM to 4:30 PM	4	7	1	0	4	1033	14	0	14	1	1	0	4	272	1	0

PEAK HOUR FACTORS	Southbound				Westbound				Northbound				Eastbound			
	Fleetwood Rd.				**Rte. 50**				**Goshen Rd.**				**Rte. 50**			
	Right	Thru	Left	**Approach**	Right	Thru	Left	**Approach**	Right	Thru	Left	**Approach**	Right	Thru	Left	**Approach**
ES PM SCHOOL PEAK HOUR																
2:15 PM to 3:15 PM	0.50	0.38	0.25	**0.50**	0.25	0.90	0.46	**0.89**	0.63	0.25	0.50	**1.00**	0.75	0.90	0.50	**0.91**
HS PM SCHOOL PEAK HOUR																
3:30 PM to 4:30 PM	0.50	0.88	0.25	**0.75**	0.50	0.87	0.58	**0.86**	0.58	0.25	0.25	**0.67**	0.50	0.91	0.25	**0.91**

PM INTERSECTION PEAK VOLUMES

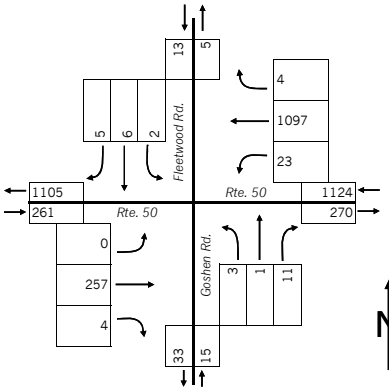

PM SYSTEM PEAK VOLUMES

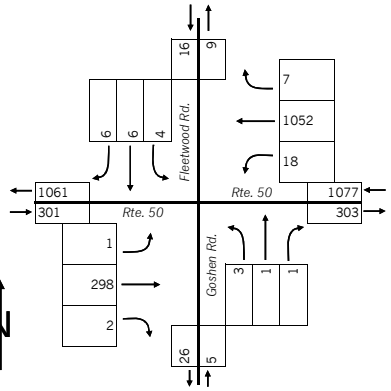

ES PM INTERSECTION PEAK VOLUMES

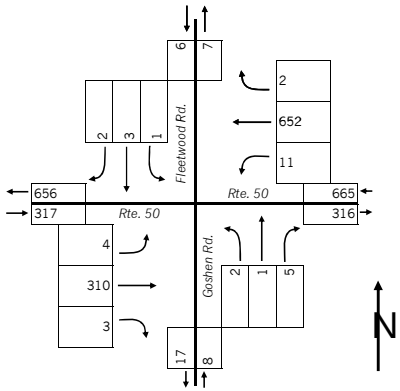

HS PM SYSTEM PEAK VOLUMES

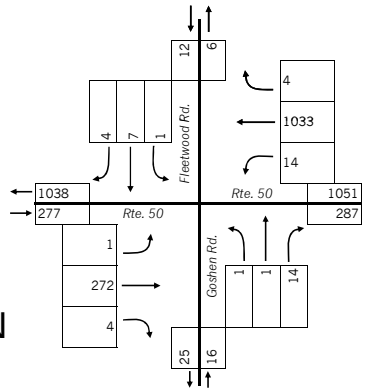

Gorove/Slade Associates

Project Name :	HS-7
Project # :	2110-013
Location	Loudoun County, VA
Data Source:	Gorove/Slade Associates

Date of Counts:	Thursday, November 19, 2009
Weather Conditions:	Light Rain

Intersection: **Tall Cedars Parkway at Gum Spring Road**

PM PEAK																
Direction:	Southbound				Westbound				Northbound				Eastbound			
Roadway:	**Gum Spring Rd.**				**No Approach**				**Gum Spring Rd.**				**Tall Cedars Pky.**			
Movement:	Right	Thru	Left	Peds	Right	Thru	Left	Peds	Right	Thru	Left	Peds	Right	Thru	Left	Peds
2:00 PM to 2:15 PM	8	90	0	1	0	0	0	0	21	25	11	0	16	0	4	0
2:15 PM to 2:30 PM	7	108	0	0	0	0	0	0	28	32	15	1	20	0	4	0
2:30 PM to 2:45 PM	14	100	0	0	0	0	0	0	34	25	7	0	10	0	4	0
2:45 PM to 3:00 PM	11	99	0	0	0	0	0	0	36	37	14	0	21	0	10	0
3:00 PM to 3:15 PM	10	118	0	0	0	0	0	0	33	51	13	0	16	0	3	0
3:15 PM to 3:30 PM	17	116	0	0	0	0	0	0	28	28	8	0	9	0	3	0
3:30 PM to 3:45 PM	10	115	0	0	0	0	0	0	36	39	10	0	8	0	8	0
3:45 PM to 4:00 PM	9	103	0	0	0	0	0	0	40	43	16	0	16	0	3	0
4:00 PM to 4:15 PM	13	135	0	0	0	0	0	0	26	41	14	0	21	0	2	0
4:15 PM to 4:30 PM	14	163	0	0	0	0	0	0	23	41	11	0	15	0	2	0
4:30 PM to 4:45 PM	31	167	0	0	0	0	0	0	27	33	9	0	19	0	8	0
4:45 PM to 5:00 PM	21	157	0	0	0	0	0	0	26	44	13	0	12	0	4	0
5:00 PM to 5:15 PM	26	170	0	0	0	0	0	0	33	27	18	0	25	0	2	0
5:15 PM to 5:30 PM	21	186	0	0	0	0	0	0	26	36	15	0	22	0	5	0
5:30 PM to 5:45 PM	21	201	0	0	0	0	0	0	16	38	17	0	20	0	3	0
5:45 PM to 6:00 PM	29	170	0	0	0	0	0	0	29	24	20	0	33	0	2	0
6:00 PM to 6:15 PM	34	175	0	0	0	0	0	0	21	46	18	0	14	0	8	0
6:15 PM to 6:30 PM	20	177	0	1	0	0	0	0	15	29	19	0	30	0	3	0
6:30 PM to 6:45 PM	17	184	0	0	0	0	0	0	19	27	13	0	31	0	6	0
6:45 PM to 7:00 PM	22	139	0	0	0	0	0	0	15	24	19	0	31	0	4	0
COMMUTER PEAK HOUR																
Direction:	Southbound				Westbound				Northbound				Eastbound			
Roadway:	**Gum Spring Rd.**				**No Approach**				**Gum Spring Rd.**				**Tall Cedars Pky.**			
Movement:	Right	Thru	Left	Peds	Right	Thru	Left	Peds	Right	Thru	Left	Peds	Right	Thru	Left	Peds
PM INTERSECTION PEAK HOUR																
5:15 PM to 6:15 PM	105	732	0	0	0	0	0	0	92	144	70	0	89	0	18	0
PM SYSTEM PEAK HOUR																
4:30 PM to 5:30 PM	99	680	0	0	0	0	0	0	112	140	55	0	78	0	19	0

PEAK HOUR FACTORS	Southbound				Westbound				Northbound				Eastbound			
	Gum Spring Rd.				**No Approach**				**Gum Spring Rd.**				**Tall Cedars Pky.**			
	Right	Thru	Left	Peds	Right	Thru	Left	Peds	Right	Thru	Left	Peds	Right	Thru	Left	Peds
PM PEAK HOUR	0.77	0.91	0.00	N/A	0.00	0.00	0.00	N/A	0.79	0.78	0.88	N/A	0.67	0.00	0.56	N/A

SCHOOL PEAK HOUR																
Direction:	Southbound				Westbound				Northbound				Eastbound			
Roadway:	**Gum Spring Rd.**				**No Approach**				**Gum Spring Rd.**				**Tall Cedars Pky.**			
Movement:	Right	Thru	Left	Peds	Right	Thru	Left	Peds	Right	Thru	Left	Peds	Right	Thru	Left	Peds
ES PM SCHOOL PEAK HOUR																
2:15 PM to 3:15 PM	42	425	0	0	0	0	0	0	131	145	49	1	67	0	21	0
HS PM SCHOOL PEAK HOUR																
3:30 PM to 4:30 PM	46	516	0	0	0	0	0	0	125	164	51	0	60	0	15	0

PEAK HOUR FACTORS	Southbound				Westbound				Northbound				Eastbound			
	Gum Spring Rd.				**No Approach**				**Gum Spring Rd.**				**Tall Cedars Pky.**			
	Right	Thru	Left	**Approach**	Right	Thru	Left	**Approach**	Right	Thru	Left	**Approach**	Right	Thru	Left	**Approach**
ES PM SCHOOL PEAK HOUR																
2:15 PM to 3:15 PM	0.75	0.90	0.00	**0.91**	0.00	0.00	0.00	**0.00**	0.91	0.71	0.82	**0.84**	0.80	0.00	0.53	**0.71**
HS PM SCHOOL PEAK HOUR																
3:30 PM to 4:30 PM	0.82	0.79	0.00	**0.79**	0.00	0.00	0.00	**0.00**	0.78	0.95	0.80	**0.86**	0.71	0.00	0.47	**0.82**

PM INTERSECTION PEAK VOLUMES

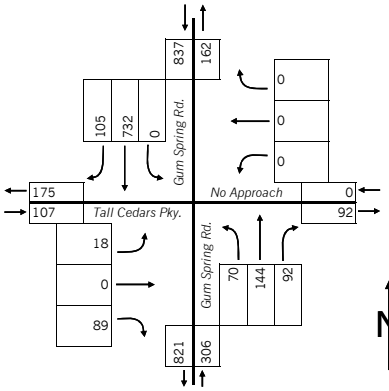

PM SYSTEM PEAK VOLUMES

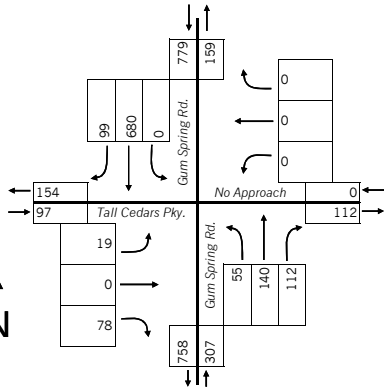

ES PM INTERSECTION PEAK VOLUMES

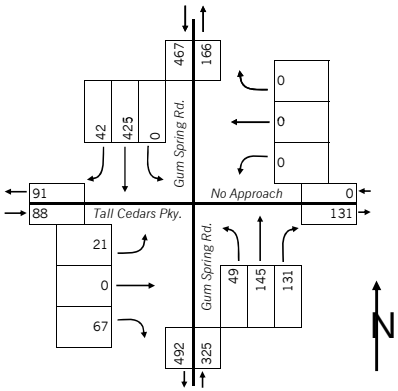

HS PM SYSTEM PEAK VOLUMES

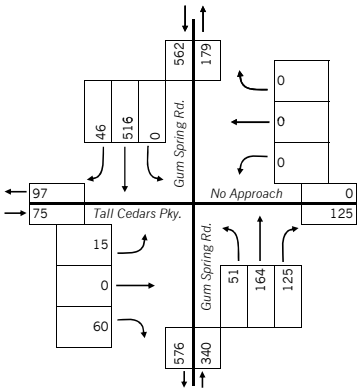

APPENDIX C

LEVEL OF SERVICE DEFINITIONS

LEVEL OF SERVICE DEFINITIONS

All capacity analyses are based on the procedures specified by the Transportation Research Board, Special Report 209: *Highway Capacity Manual (HCM),* 2000. Levels of service (LOS) range from A to F. A brief description of each level of service for signalized and unsignalized intersections is provided below.

Signalized Intersections: Level of service is based upon the traffic volume present in each lane on the roadway, the capacity of each lane at the intersection and the delay associated with each directional movement. The levels of service for signalized intersections are defined below:

- Level of Service A describes operations with very low average delay per vehicle, i.e., less than 10.0 seconds. This occurs when progression is extremely favorable, and most vehicles arrive during the green phase. Most vehicles do not stop. Short signal cycle lengths may also contribute to low delay.
- Level of Service B describes operations with average delay in the range of 10.1 to 20.0 seconds per vehicle. This generally occurs with good progression and/or short cycle lengths. More vehicles stop than for LOS A, causing higher levels of average delay.
- Level of Service C describes operations with delay in the range of 20.1 to 35.0 seconds per vehicle. These higher delays may result from fair progression and/or longer cycle lengths. Individual cycle failures may begin to appear at this level. The number of vehicles stopping is significant at this level although many still pass through the intersection without stopping. This is generally considered the lower end of the range of the acceptable level of service in rural areas.
- Level of Service D describes operations with delay in the range of 35.1 to 55.0 seconds per vehicle. At LOS D, the influence of congestion becomes more noticeable. Longer delays may result from some combination of unfavorable progression, long cycle lengths, and/or high traffic volumes as compared to the roadway capacity. Many vehicles are required to stop and the number of vehicles that do not have to stop declines. Individual signal cycle failures, where all waiting vehicles do not clear the intersection during a single green time, are noticeable. This is generally considered the lower end of the range of the acceptable level of service in urban areas.
- Level of Service E describes operations with delay in the range of 55.1 to 80.0 seconds per vehicle. These higher delay values generally indicate poor progression, long cycle lengths, and high traffic volumes. Individual cycle failures are frequent occurrences. LOS E has been set as the limit of acceptable conditions.
- Level of Service F describes operations with average delay in excess of 80.0 seconds per vehicle. This is considered to be unacceptable to most drivers. This condition often occurs with over-

saturation, i.e., when traffic arrives at a flow rate that exceeds the capacity of the intersection. It may also occur at high volumes with many individual cycle failures. Poor progression and long cycle lengths may also contribute to such delays.

Unsignalized Intersections: At an unsignalized intersection, the major street through traffic and right turns are assumed to operate unimpeded and therefore receive no level of service rating. The level of service for the minor street and the major street left turn traffic is dependent on the volume and capacity of the available lanes, and, the number and frequency of acceptable gaps in the major street traffic to make a conflicting turn. The level of service grade is provided for each conflicting movement at an unsignalized intersection and is based on the total average delay experienced by each vehicle. The delay includes the time it takes a vehicle to move from the back of a queue through the intersection.

The unsignalized intersection level of service analysis does not account for variations in driver behavior or the effects of nearby traffic signals. Therefore, the results from this analysis usually indicates worse levels of service than may be experienced in the field. The unsignalized intersection level of service descriptions are provided below:

- Level of Service A. Describes operations where there is very little to no conflicting traffic for a minor side street movement, i.e., an average total delay of less than 10.0 seconds per vehicle.
- Level of Service B. Describes operations with average total delay in the range of 10.1 to 15.0 seconds per vehicle.
- Level of Service C. Describes operations with average total delay in the range of 15.1 to 25.0 second per vehicle.
- Level of Service D. Describes operations with average total delay in the range of 25.1 to 35.0 seconds per vehicle.
- Level of Service E. Describes operations with average total delay in the range of 35.1 to 50.0 seconds per vehicle.
- Level of Service F. Describes operations with average total delay of 50 seconds per vehicle. LOS F exists when there are insufficient gaps of suitable size to allow a side street demand to cross safely through or enter a major street traffic stream. This level of service is generally evident from extremely long total delays experienced by side street traffic and by queuing on the minor approaches. It is important to note that LOS F may not always result in long queues but may result in adjustments to normal driver behavior.

APPENDIX D

INTERSECTION CAPACITY ANALYSIS RESULTS– EXISTING CONDITIONS (2009)

Movement	EBL	EBT	EBR	WBL	WBT	WBR	NBL	NBT	NBR	SBL	SBT	SBR
Lane Configurations												
Volume (veh/h)	9	802	8	19	338	11	3	8	24	4	1	0
Sign Control		Free			Free			Stop			Stop	
Grade		0%			0%			0%			0%	
Peak Hour Factor	0.90	0.90	0.90	0.91	0.91	0.91	0.67	0.67	0.67	0.42	0.42	0.42
Hourly flow rate (vph)	10	891	9	21	371	12	4	12	36	10	2	0
Pedestrians												
Lane Width (ft)												
Walking Speed (ft/s)												
Percent Blockage												
Right turn flare (veh)												
Median type		None			None							
Median storage veh)												
Upstream signal (ft)												
pX, platoon unblocked												
vC, conflicting volume	384			900			1140	1336	446	921	1333	186
vC1, stage 1 conf vol												
vC2, stage 2 conf vol												
vCu, unblocked vol	384			900			1140	1336	446	921	1333	186
tC, single (s)	4.1			4.1			7.5	6.5	6.9	7.5	6.5	6.9
tC, 2 stage (s)												
tF (s)	2.2			2.2			3.5	4.0	3.3	3.5	4.0	3.3
p0 queue free %	99			97			97	92	94	95	98	100
cM capacity (veh/h)	1172			751			150	147	560	193	147	825

Direction, Lane #	EB 1	EB 2	EB 3	EB 4	WB 1	WB 2	WB 3	WB 4	NB 1	SB 1
Volume Total	10	446	446	9	21	186	186	12	52	12
Volume Left	10	0	0	0	21	0	0	0	4	10
Volume Right	0	0	0	9	0	0	0	12	36	0
cSH	1172	1700	1700	1700	751	1700	1700	1700	298	181
Volume to Capacity	0.01	0.26	0.26	0.01	0.03	0.11	0.11	0.01	0.18	0.07
Queue Length 95th (ft)	1	0	0	0	2	0	0	0	16	5
Control Delay (s)	8.1	0.0	0.0	0.0	9.9	0.0	0.0	0.0	19.6	26.2
Lane LOS	A				A				C	D
Approach Delay (s)	0.1				0.5				19.6	26.2
Approach LOS									C	D

Intersection Summary				
Average Delay		1.2		
Intersection Capacity Utilization		32.2%	ICU Level of Service	A
Analysis Period (min)		15		

Movement	EBL	EBR	NBL	NBT	SBT	SBR
Lane Configurations						
Volume (veh/h)	23	55	35	266	260	11
Sign Control	Stop			Free	Free	
Grade	0%			0%	0%	
Peak Hour Factor	0.78	0.78	0.84	0.84	0.87	0.87
Hourly flow rate (vph)	29	71	42	317	299	13
Pedestrians						
Lane Width (ft)						
Walking Speed (ft/s)						
Percent Blockage						
Right turn flare (veh)						
Median type				None	None	
Median storage veh)						
Upstream signal (ft)						
pX, platoon unblocked						
vC, conflicting volume	699	299	299			
vC1, stage 1 conf vol						
vC2, stage 2 conf vol						
vCu, unblocked vol	699	299	299			
tC, single (s)	6.4	6.2	4.1			
tC, 2 stage (s)						
tF (s)	3.5	3.3	2.2			
p0 queue free %	92	90	97			
cM capacity (veh/h)	393	741	1262			

Direction, Lane #	EB 1	EB 2	NB 1	SB 1	SB 2
Volume Total	29	71	358	299	13
Volume Left	29	0	42	0	0
Volume Right	0	71	0	0	13
cSH	393	741	1262	1700	1700
Volume to Capacity	0.08	0.10	0.03	0.18	0.01
Queue Length 95th (ft)	6	8	3	0	0
Control Delay (s)	14.9	10.4	1.2	0.0	0.0
Lane LOS	B	B	A		
Approach Delay (s)	11.7		1.2	0.0	
Approach LOS	B				

Intersection Summary				
Average Delay		2.1		
Intersection Capacity Utilization		43.0%	ICU Level of Service	A
Analysis Period (min)		15		

Movement	EBL	EBT	EBR	WBL	WBT	WBR	NBL	NBT	NBR	SBL	SBT	SBR
Lane Configurations												
Sign Control		Stop			Stop			Stop			Stop	
Volume (vph)	55	242	25	82	69	163	20	225	106	207	137	20
Peak Hour Factor	0.90	0.90	0.90	0.87	0.87	0.87	0.86	0.86	0.86	0.97	0.97	0.97
Hourly flow rate (vph)	61	269	28	94	79	187	23	262	123	213	141	21

Direction, Lane #	EB 1	WB 1	NB 1	SB 1
Volume Total (vph)	358	361	408	375
Volume Left (vph)	61	94	23	213
Volume Right (vph)	28	187	123	21
Hadj (s)	0.02	-0.23	-0.14	0.11
Departure Headway (s)	9.3	9.1	9.2	9.3
Degree Utilization, x	0.93	0.91	1.04	0.97
Capacity (veh/h)	382	379	396	375
Control Delay (s)	60.5	57.1	88.3	70.4
Approach Delay (s)	60.5	57.1	88.3	70.4
Approach LOS	F	F	F	F

Intersection Summary				
Delay		69.7		
HCM Level of Service		F		
Intersection Capacity Utilization		78.0%	ICU Level of Service	D
Analysis Period (min)		15		

Movement	EBL	EBT	WBT	WBR	SBL	SBR
Lane Configurations						
Volume (veh/h)	15	33	11	2	0	3
Sign Control		Free	Free		Stop	
Grade		0%	0%		0%	
Peak Hour Factor	0.67	0.67	0.54	0.54	0.75	0.75
Hourly flow rate (vph)	22	49	20	4	0	4
Pedestrians						
Lane Width (ft)						
Walking Speed (ft/s)						
Percent Blockage						
Right turn flare (veh)						
Median type		None	None			
Median storage veh)						
Upstream signal (ft)						
pX, platoon unblocked						
vC, conflicting volume	20				116	22
vC1, stage 1 conf vol						
vC2, stage 2 conf vol						
vCu, unblocked vol	20				116	22
tC, single (s)	4.1				6.4	6.2
tC, 2 stage (s)						
tF (s)	2.2				3.5	3.3
p0 queue free %	99				100	100
cM capacity (veh/h)	1596				867	1055

Direction, Lane #	EB 1	WB 1	SB 1
Volume Total	72	24	4
Volume Left	22	0	0
Volume Right	0	4	4
cSH	1596	1700	1055
Volume to Capacity	0.01	0.01	0.00
Queue Length 95th (ft)	1	0	0
Control Delay (s)	2.3	0.0	8.4
Lane LOS	A		A
Approach Delay (s)	2.3	0.0	8.4
Approach LOS			A

Intersection Summary				
Average Delay		2.0		
Intersection Capacity Utilization		19.2%	ICU Level of Service	A
Analysis Period (min)		15		

Movement	EBL	EBT	EBR	WBL	WBT	WBR	NBL	NBT	NBR	SBL	SBT	SBR
Lane Configurations												
Volume (veh/h)	1	272	4	14	1033	4	1	1	14	1	7	4
Sign Control		Free			Free			Stop			Stop	
Grade		0%			0%			0%			0%	
Peak Hour Factor	0.91	0.91	0.91	0.86	0.86	0.86	0.67	0.67	0.67	0.75	0.75	0.75
Hourly flow rate (vph)	1	299	4	16	1201	5	1	1	21	1	9	5
Pedestrians												
Lane Width (ft)												
Walking Speed (ft/s)												
Percent Blockage												
Right turn flare (veh)												
Median type		None			None							
Median storage veh)												
Upstream signal (ft)												
pX, platoon unblocked												
vC, conflicting volume	1206			303			944	1539	149	1407	1539	601
vC1, stage 1 conf vol												
vC2, stage 2 conf vol												
vCu, unblocked vol	1206			303			944	1539	149	1407	1539	601
tC, single (s)	4.1			4.1			7.5	6.5	6.9	7.5	6.5	6.9
tC, 2 stage (s)												
tF (s)	2.2			2.2			3.5	4.0	3.3	3.5	4.0	3.3
p0 queue free %	100			99			99	99	98	99	92	99
cM capacity (veh/h)	574			1254			198	113	870	94	113	444

Direction, Lane #	EB 1	EB 2	EB 3	EB 4	WB 1	WB 2	WB 3	WB 4	NB 1	SB 1
Volume Total	1	149	149	4	16	601	601	5	24	16
Volume Left	1	0	0	0	16	0	0	0	1	1
Volume Right	0	0	0	4	0	0	0	5	21	5
cSH	574	1700	1700	1700	1254	1700	1700	1700	533	147
Volume to Capacity	0.00	0.09	0.09	0.00	0.01	0.35	0.35	0.00	0.04	0.11
Queue Length 95th (ft)	0	0	0	0	1	0	0	0	4	9
Control Delay (s)	11.3	0.0	0.0	0.0	7.9	0.0	0.0	0.0	12.1	32.5
Lane LOS	B				A				B	D
Approach Delay (s)	0.0				0.1				12.1	32.5
Approach LOS									B	D

Intersection Summary				
Average Delay		0.6		
Intersection Capacity Utilization		38.6%	ICU Level of Service	A
Analysis Period (min)		15		

Movement	EBL	EBR	NBL	NBT	SBT	SBR
Lane Configurations						
Volume (veh/h)	15	60	51	164	516	46
Sign Control	Stop			Free	Free	
Grade	0%			0%	0%	
Peak Hour Factor	0.82	0.82	0.86	0.86	0.79	0.79
Hourly flow rate (vph)	18	73	59	191	653	58
Pedestrians						
Lane Width (ft)						
Walking Speed (ft/s)						
Percent Blockage						
Right turn flare (veh)						
Median type				None	None	
Median storage veh)						
Upstream signal (ft)						
pX, platoon unblocked						
vC, conflicting volume	962	653	653			
vC1, stage 1 conf vol						
vC2, stage 2 conf vol						
vCu, unblocked vol	962	653	653			
tC, single (s)	6.4	6.2	4.1			
tC, 2 stage (s)						
tF (s)	3.5	3.3	2.2			
p0 queue free %	93	84	94			
cM capacity (veh/h)	266	467	934			

Direction, Lane #	EB 1	EB 2	NB 1	SB 1	SB 2
Volume Total	18	73	250	653	58
Volume Left	18	0	59	0	0
Volume Right	0	73	0	0	58
cSH	266	467	934	1700	1700
Volume to Capacity	0.07	0.16	0.06	0.38	0.03
Queue Length 95th (ft)	6	14	5	0	0
Control Delay (s)	19.5	14.1	2.7	0.0	0.0
Lane LOS	C	B	A		
Approach Delay (s)	15.2		2.7	0.0	
Approach LOS	C				

Intersection Summary				
Average Delay		2.0		
Intersection Capacity Utilization		51.9%	ICU Level of Service	A
Analysis Period (min)		15		

Movement	EBL	EBT	EBR	WBL	WBT	WBR	NBL	NBT	NBR	SBL	SBT	SBR
Lane Configurations												
Sign Control		Stop			Stop			Stop			Stop	
Volume (vph)	53	72	35	128	85	79	21	122	58	60	257	12
Peak Hour Factor	0.77	0.77	0.77	0.78	0.78	0.78	0.87	0.87	0.87	0.90	0.90	0.90
Hourly flow rate (vph)	69	94	45	164	109	101	24	140	67	67	286	13

Direction, Lane #	EB 1	WB 1	NB 1	SB 1
Volume Total (vph)	208	374	231	366
Volume Left (vph)	69	164	24	67
Volume Right (vph)	45	101	67	13
Hadj (s)	-0.03	-0.04	-0.12	0.05
Departure Headway (s)	6.8	6.4	6.6	6.4
Degree Utilization, x	0.39	0.66	0.43	0.65
Capacity (veh/h)	458	532	465	515
Control Delay (s)	14.1	20.9	14.4	20.8
Approach Delay (s)	14.1	20.9	14.4	20.8
Approach LOS	B	C	B	C

Intersection Summary				
Delay		18.4		
HCM Level of Service		C		
Intersection Capacity Utilization		58.2%	ICU Level of Service	B
Analysis Period (min)		15		

Movement	EBL	EBT	WBT	WBR	SBL	SBR
Lane Configurations						
Volume (veh/h)	3	12	27	0	0	11
Sign Control		Free	Free		Stop	
Grade		0%	0%		0%	
Peak Hour Factor	0.63	0.63	0.68	0.68	0.69	0.69
Hourly flow rate (vph)	5	19	40	0	0	16
Pedestrians						
Lane Width (ft)						
Walking Speed (ft/s)						
Percent Blockage						
Right turn flare (veh)						
Median type		None	None			
Median storage veh)						
Upstream signal (ft)						
pX, platoon unblocked						
vC, conflicting volume	40				68	40
vC1, stage 1 conf vol						
vC2, stage 2 conf vol						
vCu, unblocked vol	40				68	40
tC, single (s)	4.1				6.4	6.2
tC, 2 stage (s)						
tF (s)	2.2				3.5	3.3
p0 queue free %	100				100	98
cM capacity (veh/h)	1570				934	1032

Direction, Lane #	EB 1	WB 1	SB 1
Volume Total	24	40	16
Volume Left	5	0	0
Volume Right	0	0	16
cSH	1570	1700	1032
Volume to Capacity	0.00	0.02	0.02
Queue Length 95th (ft)	0	0	1
Control Delay (s)	1.5	0.0	8.5
Lane LOS	A		A
Approach Delay (s)	1.5	0.0	8.5
Approach LOS			A

Intersection Summary				
Average Delay		2.2		
Intersection Capacity Utilization		13.3%	ICU Level of Service	A
Analysis Period (min)		15		

Movement	EBL	EBT	EBR	WBL	WBT	WBR	NBL	NBT	NBR	SBL	SBT	SBR
Lane Configurations												
Volume (veh/h)	14	1047	4	10	297	12	2	14	16	5	1	0
Sign Control		Free			Free			Stop			Stop	
Grade		0%			0%			0%			0%	
Peak Hour Factor	0.91	0.91	0.91	0.71	0.71	0.71	0.89	0.89	0.89	0.50	0.50	0.50
Hourly flow rate (vph)	15	1151	4	14	418	17	2	16	18	10	2	0
Pedestrians												
Lane Width (ft)												
Walking Speed (ft/s)												
Percent Blockage												
Right turn flare (veh)												
Median type		None			None							
Median storage veh)												
Upstream signal (ft)												
pX, platoon unblocked												
vC, conflicting volume	435			1155			1420	1645	575	1078	1632	209
vC1, stage 1 conf vol												
vC2, stage 2 conf vol												
vCu, unblocked vol	435			1155			1420	1645	575	1078	1632	209
tC, single (s)	4.1			4.1			7.5	6.5	6.9	7.5	6.5	6.9
tC, 2 stage (s)												
tF (s)	2.2			2.2			3.5	4.0	3.3	3.5	4.0	3.3
p0 queue free %	99			98			98	83	96	93	98	100
cM capacity (veh/h)	1121			601			93	95	461	141	97	797

Direction, Lane #	EB 1	EB 2	EB 3	EB 4	WB 1	WB 2	WB 3	WB 4	NB 1	SB 1
Volume Total	15	575	575	4	14	209	209	17	36	12
Volume Left	15	0	0	0	14	0	0	0	2	10
Volume Right	0	0	0	4	0	0	0	17	18	0
cSH	1121	1700	1700	1700	601	1700	1700	1700	157	131
Volume to Capacity	0.01	0.34	0.34	0.00	0.02	0.12	0.12	0.01	0.23	0.09
Queue Length 95th (ft)	1	0	0	0	2	0	0	0	21	7
Control Delay (s)	8.3	0.0	0.0	0.0	11.1	0.0	0.0	0.0	34.6	35.2
Lane LOS	A				B				D	E
Approach Delay (s)	0.1				0.3				34.6	35.2
Approach LOS									D	E

Intersection Summary				
Average Delay		1.2		
Intersection Capacity Utilization		38.9%	ICU Level of Service	A
Analysis Period (min)		15		

Movement	EBL	EBR	NBL	NBT	SBT	SBR
Lane Configurations						
Volume (veh/h)	38	65	66	263	219	28
Sign Control	Stop			Free	Free	
Grade	0%			0%	0%	
Peak Hour Factor	0.83	0.83	0.85	0.85	0.86	0.86
Hourly flow rate (vph)	46	78	78	309	255	33
Pedestrians						
Lane Width (ft)						
Walking Speed (ft/s)						
Percent Blockage						
Right turn flare (veh)						
Median type				None	None	
Median storage veh)						
Upstream signal (ft)						
pX, platoon unblocked						
vC, conflicting volume	719	255	255			
vC1, stage 1 conf vol						
vC2, stage 2 conf vol						
vCu, unblocked vol	719	255	255			
tC, single (s)	6.4	6.2	4.1			
tC, 2 stage (s)						
tF (s)	3.5	3.3	2.2			
p0 queue free %	88	90	94			
cM capacity (veh/h)	372	784	1310			

Direction, Lane #	EB 1	EB 2	NB 1	SB 1	SB 2
Volume Total	46	78	387	255	33
Volume Left	46	0	78	0	0
Volume Right	0	78	0	0	33
cSH	372	784	1310	1700	1700
Volume to Capacity	0.12	0.10	0.06	0.15	0.02
Queue Length 95th (ft)	10	8	5	0	0
Control Delay (s)	16.0	10.1	2.0	0.0	0.0
Lane LOS	C	B	A		
Approach Delay (s)	12.3		2.0	0.0	
Approach LOS	B				

Intersection Summary				
Average Delay		2.9		
Intersection Capacity Utilization		42.4%	ICU Level of Service	A
Analysis Period (min)		15		

Movement	EBL	EBT	EBR	WBL	WBT	WBR	NBL	NBT	NBR	SBL	SBT	SBR
Lane Configurations												
Sign Control		Stop			Stop			Stop			Stop	
Volume (vph)	58	218	18	64	85	90	33	258	135	182	120	26
Peak Hour Factor	0.83	0.83	0.83	0.88	0.88	0.88	0.87	0.87	0.87	0.92	0.92	0.92
Hourly flow rate (vph)	70	263	22	73	97	102	38	297	155	198	130	28

Direction, Lane #	EB 1	WB 1	NB 1	SB 1
Volume Total (vph)	354	272	490	357
Volume Left (vph)	70	73	38	198
Volume Right (vph)	22	102	155	28
Hadj (s)	0.04	-0.14	-0.14	0.10
Departure Headway (s)	8.3	8.5	7.8	8.3
Degree Utilization, x	0.82	0.64	1.07	0.82
Capacity (veh/h)	420	394	457	412
Control Delay (s)	38.8	25.6	88.4	39.4
Approach Delay (s)	38.8	25.6	88.4	39.4
Approach LOS	E	D	F	E

Intersection Summary				
Delay		53.0		
HCM Level of Service		F		
Intersection Capacity Utilization	72.0%		ICU Level of Service	C
Analysis Period (min)		15		

Movement	EBL	EBT	WBT	WBR	SBL	SBR
Lane Configurations						
Volume (veh/h)	22	66	7	3	2	3
Sign Control		Free	Free		Stop	
Grade		0%	0%		0%	
Peak Hour Factor	0.88	0.88	0.31	0.31	0.63	0.63
Hourly flow rate (vph)	25	75	23	10	3	5
Pedestrians						
Lane Width (ft)						
Walking Speed (ft/s)						
Percent Blockage						
Right turn flare (veh)						
Median type		None	None			
Median storage veh)						
Upstream signal (ft)						
pX, platoon unblocked						
vC, conflicting volume	23				152	27
vC1, stage 1 conf vol						
vC2, stage 2 conf vol						
vCu, unblocked vol	23				152	27
tC, single (s)	4.1				6.4	6.2
tC, 2 stage (s)						
tF (s)	2.2				3.5	3.3
p0 queue free %	98				100	100
cM capacity (veh/h)	1593				826	1048

Direction, Lane #	EB 1	WB 1	SB 1
Volume Total	100	32	8
Volume Left	25	0	3
Volume Right	0	10	5
cSH	1593	1700	946
Volume to Capacity	0.02	0.02	0.01
Queue Length 95th (ft)	1	0	1
Control Delay (s)	1.9	0.0	8.8
Lane LOS	A		A
Approach Delay (s)	1.9	0.0	8.8
Approach LOS			A

Intersection Summary				
Average Delay		1.9		
Intersection Capacity Utilization		21.4%	ICU Level of Service	A
Analysis Period (min)		15		

Movement	EBL	EBT	EBR	WBL	WBT	WBR	NBL	NBT	NBR	SBL	SBT	SBR
Lane Configurations												
Volume (veh/h)	4	310	3	11	652	2	2	1	5	1	3	2
Sign Control		Free			Free			Stop			Stop	
Grade		0%			0%			0%			0%	
Peak Hour Factor	0.91	0.91	0.91	0.89	0.89	0.89	1.00	1.00	1.00	0.50	0.50	0.50
Hourly flow rate (vph)	4	341	3	12	733	2	2	1	5	2	6	4
Pedestrians												
Lane Width (ft)												
Walking Speed (ft/s)												
Percent Blockage												
Right turn flare (veh)												
Median type		None			None							
Median storage veh)												
Upstream signal (ft)												
pX, platoon unblocked												
vC, conflicting volume	735			344			747	1109	170	942	1110	366
vC1, stage 1 conf vol												
vC2, stage 2 conf vol												
vCu, unblocked vol	735			344			747	1109	170	942	1110	366
tC, single (s)	4.1			4.1			7.5	6.5	6.9	7.5	6.5	6.9
tC, 2 stage (s)												
tF (s)	2.2			2.2			3.5	4.0	3.3	3.5	4.0	3.3
p0 queue free %	99			99			99	100	99	99	97	99
cM capacity (veh/h)	866			1212			289	205	844	213	205	631

Direction, Lane #	EB 1	EB 2	EB 3	EB 4	WB 1	WB 2	WB 3	WB 4	NB 1	SB 1
Volume Total	4	170	170	3	12	366	366	2	8	12
Volume Left	4	0	0	0	12	0	0	0	2	2
Volume Right	0	0	0	3	0	0	0	2	5	4
cSH	866	1700	1700	1700	1212	1700	1700	1700	452	267
Volume to Capacity	0.01	0.10	0.10	0.00	0.01	0.22	0.22	0.00	0.02	0.05
Queue Length 95th (ft)	0	0	0	0	1	0	0	0	1	4
Control Delay (s)	9.2	0.0	0.0	0.0	8.0	0.0	0.0	0.0	13.1	19.1
Lane LOS	A				A				B	C
Approach Delay (s)	0.1				0.1				13.1	19.1
Approach LOS									B	C

Intersection Summary				
Average Delay		0.4		
Intersection Capacity Utilization		28.0%	ICU Level of Service	A
Analysis Period (min)		15		

Movement	EBL	EBR	NBL	NBT	SBT	SBR
Lane Configurations						
Volume (veh/h)	21	67	49	145	425	42
Sign Control	Stop			Free	Free	
Grade	0%			0%	0%	
Peak Hour Factor	0.71	0.71	0.84	0.84	0.91	0.91
Hourly flow rate (vph)	30	94	58	173	467	46
Pedestrians						
Lane Width (ft)						
Walking Speed (ft/s)						
Percent Blockage						
Right turn flare (veh)						
Median type				None	None	
Median storage veh)						
Upstream signal (ft)						
pX, platoon unblocked						
vC, conflicting volume	756	467	467			
vC1, stage 1 conf vol						
vC2, stage 2 conf vol						
vCu, unblocked vol	756	467	467			
tC, single (s)	6.4	6.2	4.1			
tC, 2 stage (s)						
tF (s)	3.5	3.3	2.2			
p0 queue free %	92	84	95			
cM capacity (veh/h)	356	596	1094			

Direction, Lane #	EB 1	EB 2	NB 1	SB 1	SB 2
Volume Total	30	94	231	467	46
Volume Left	30	0	58	0	0
Volume Right	0	94	0	0	46
cSH	356	596	1094	1700	1700
Volume to Capacity	0.08	0.16	0.05	0.27	0.03
Queue Length 95th (ft)	7	14	4	0	0
Control Delay (s)	16.0	12.2	2.5	0.0	0.0
Lane LOS	C	B	A		
Approach Delay (s)	13.1		2.5	0.0	
Approach LOS	B				

Intersection Summary				
Average Delay		2.5		
Intersection Capacity Utilization		46.0%	ICU Level of Service	A
Analysis Period (min)		15		

Movement	EBL	EBT	EBR	WBL	WBT	WBR	NBL	NBT	NBR	SBL	SBT	SBR
Lane Configurations												
Sign Control		Stop			Stop			Stop			Stop	
Volume (vph)	50	67	31	80	107	78	18	122	45	51	219	19
Peak Hour Factor	0.62	0.62	0.62	0.86	0.86	0.86	0.94	0.94	0.94	0.74	0.74	0.74
Hourly flow rate (vph)	81	108	50	93	124	91	19	130	48	69	296	26

Direction, Lane #	EB 1	WB 1	NB 1	SB 1
Volume Total (vph)	239	308	197	391
Volume Left (vph)	81	93	19	69
Volume Right (vph)	50	91	48	26
Hadj (s)	-0.02	-0.08	-0.09	0.03
Departure Headway (s)	6.5	6.3	6.5	6.2
Degree Utilization, x	0.43	0.54	0.35	0.67
Capacity (veh/h)	491	518	481	553
Control Delay (s)	14.3	16.3	13.0	20.7
Approach Delay (s)	14.3	16.3	13.0	20.7
Approach LOS	B	C	B	C

Intersection Summary				
Delay		16.8		
HCM Level of Service		C		
Intersection Capacity Utilization		50.8%	ICU Level of Service	A
Analysis Period (min)		15		

Movement	EBL	EBT	WBT	WBR	SBL	SBR
Lane Configurations						
Volume (veh/h)	3	11	26	1	0	4
Sign Control		Free	Free		Stop	
Grade		0%	0%		0%	
Peak Hour Factor	0.50	0.50	0.84	0.84	0.50	0.50
Hourly flow rate (vph)	6	22	31	1	0	8
Pedestrians						
Lane Width (ft)						
Walking Speed (ft/s)						
Percent Blockage						
Right turn flare (veh)						
Median type		None	None			
Median storage veh)						
Upstream signal (ft)						
pX, platoon unblocked						
vC, conflicting volume	31				66	32
vC1, stage 1 conf vol						
vC2, stage 2 conf vol						
vCu, unblocked vol	31				66	32
tC, single (s)	4.1				6.4	6.2
tC, 2 stage (s)						
tF (s)	2.2				3.5	3.3
p0 queue free %	100				100	99
cM capacity (veh/h)	1582				936	1042

Direction, Lane #	EB 1	WB 1	SB 1
Volume Total	28	32	8
Volume Left	6	0	0
Volume Right	0	1	8
cSH	1582	1700	1042
Volume to Capacity	0.00	0.02	0.01
Queue Length 95th (ft)	0	0	1
Control Delay (s)	1.6	0.0	8.5
Lane LOS	A		A
Approach Delay (s)	1.6	0.0	8.5
Approach LOS			A

Intersection Summary				
Average Delay		1.6		
Intersection Capacity Utilization		13.3%	ICU Level of Service	A
Analysis Period (min)		15		

Movement	EBL	EBT	EBR	WBL	WBT	WBR	NBL	NBT	NBR	SBL	SBT	SBR
Lane Configurations												
Volume (veh/h)	9	802	8	19	338	11	3	8	24	4	1	0
Sign Control		Free			Free			Stop			Stop	
Grade		0%			0%			0%			0%	
Peak Hour Factor	0.90	0.90	0.90	0.91	0.91	0.91	0.67	0.67	0.67	0.42	0.42	0.42
Hourly flow rate (vph)	10	891	9	21	371	12	4	12	36	10	2	0
Pedestrians												
Lane Width (ft)												
Walking Speed (ft/s)												
Percent Blockage												
Right turn flare (veh)												
Median type		None			None							
Median storage veh)												
Upstream signal (ft)												
pX, platoon unblocked												
vC, conflicting volume	384			900			1140	1336	446	921	1333	186
vC1, stage 1 conf vol												
vC2, stage 2 conf vol												
vCu, unblocked vol	384			900			1140	1336	446	921	1333	186
tC, single (s)	4.1			4.1			7.5	6.5	6.9	7.5	6.5	6.9
tC, 2 stage (s)												
tF (s)	2.2			2.2			3.5	4.0	3.3	3.5	4.0	3.3
p0 queue free %	99			97			97	92	94	95	98	100
cM capacity (veh/h)	1172			751			150	147	560	193	147	825

Direction, Lane #	EB 1	EB 2	EB 3	EB 4	WB 1	WB 2	WB 3	WB 4	NB 1	SB 1
Volume Total	10	446	446	9	21	186	186	12	52	12
Volume Left	10	0	0	0	21	0	0	0	4	10
Volume Right	0	0	0	9	0	0	0	12	36	0
cSH	1172	1700	1700	1700	751	1700	1700	1700	298	181
Volume to Capacity	0.01	0.26	0.26	0.01	0.03	0.11	0.11	0.01	0.18	0.07
Queue Length 95th (ft)	1	0	0	0	2	0	0	0	16	5
Control Delay (s)	8.1	0.0	0.0	0.0	9.9	0.0	0.0	0.0	19.6	26.2
Lane LOS	A				A				C	D
Approach Delay (s)	0.1				0.5				19.6	26.2
Approach LOS									C	D

Intersection Summary				
Average Delay		1.2		
Intersection Capacity Utilization		32.2%	ICU Level of Service	A
Analysis Period (min)		15		

Movement	EBL	EBR	NBL	NBT	SBT	SBR
Lane Configurations						
Volume (veh/h)	23	55	35	266	260	11
Sign Control	Stop			Free	Free	
Grade	0%			0%	0%	
Peak Hour Factor	0.78	0.78	0.84	0.84	0.87	0.87
Hourly flow rate (vph)	29	71	42	317	299	13
Pedestrians						
Lane Width (ft)						
Walking Speed (ft/s)						
Percent Blockage						
Right turn flare (veh)						
Median type				None	None	
Median storage veh)						
Upstream signal (ft)						
pX, platoon unblocked						
vC, conflicting volume	699	299	299			
vC1, stage 1 conf vol						
vC2, stage 2 conf vol						
vCu, unblocked vol	699	299	299			
tC, single (s)	6.4	6.2	4.1			
tC, 2 stage (s)						
tF (s)	3.5	3.3	2.2			
p0 queue free %	92	90	97			
cM capacity (veh/h)	393	741	1262			

Direction, Lane #	EB 1	EB 2	NB 1	SB 1	SB 2
Volume Total	29	71	358	299	13
Volume Left	29	0	42	0	0
Volume Right	0	71	0	0	13
cSH	393	741	1262	1700	1700
Volume to Capacity	0.08	0.10	0.03	0.18	0.01
Queue Length 95th (ft)	6	8	3	0	0
Control Delay (s)	14.9	10.4	1.2	0.0	0.0
Lane LOS	B	B	A		
Approach Delay (s)	11.7		1.2	0.0	
Approach LOS	B				

Intersection Summary				
Average Delay		2.1		
Intersection Capacity Utilization		43.0%	ICU Level of Service	A
Analysis Period (min)		15		

Movement	EBL	EBT	EBR	WBL	WBT	WBR	NBL	NBT	NBR	SBL	SBT	SBR
Lane Configurations												
Volume (vph)	55	242	25	82	69	163	20	225	106	207	137	20
Ideal Flow (vphpl)	1900	1900	1900	1900	1900	1900	1900	1900	1900	1900	1900	1900
Total Lost time (s)		7.0	7.0		7.0	7.0	7.0	7.0		7.0	7.0	7.0
Lane Util. Factor		1.00	1.00		1.00	1.00	1.00	0.95		1.00	0.95	1.00
Frt		1.00	0.85		1.00	0.85	1.00	0.95		1.00	1.00	0.85
Flt Protected		0.99	1.00		0.97	1.00	0.95	1.00		0.95	1.00	1.00
Satd. Flow (prot)		1846	1583		1813	1583	1770	3370		1770	3539	1583
Flt Permitted		0.99	1.00		0.97	1.00	0.66	1.00		0.32	1.00	1.00
Satd. Flow (perm)		1846	1583		1813	1583	1234	3370		595	3539	1583
Peak-hour factor, PHF	0.90	0.90	0.90	0.87	0.87	0.87	0.86	0.86	0.86	0.97	0.97	0.97
Adj. Flow (vph)	61	269	28	94	79	187	23	262	123	213	141	21
RTOR Reduction (vph)	0	0	10	0	0	134	0	49	0	0	0	10
Lane Group Flow (vph)	0	330	18	0	173	53	23	336	0	213	141	11
Turn Type	Split		pm+ov	Split		pm+ov	pm+pt			pm+pt		pm+ov
Protected Phases	4	4	5	8	8	1	5	2		1	6	4
Permitted Phases			4			8	2			6		6
Actuated Green, G (s)		21.4	23.5		13.7	26.3	19.7	17.6		37.2	28.1	49.5
Effective Green, g (s)		21.4	23.5		13.7	26.3	19.7	17.6		37.2	28.1	49.5
Actuated g/C Ratio		0.23	0.25		0.15	0.28	0.21	0.19		0.40	0.30	0.53
Clearance Time (s)		7.0	7.0		7.0	7.0	7.0	7.0		7.0	7.0	7.0
Vehicle Extension (s)		3.0	3.0		3.0	3.0	3.0	3.0		3.0	3.0	3.0
Lane Grp Cap (vph)		423	399		266	565	273	636		396	1066	959
v/s Ratio Prot		c0.18	0.00		c0.10	0.01	0.00	0.10		c0.07	0.04	0.00
v/s Ratio Perm			0.01			0.02	0.02			c0.14		0.00
v/c Ratio		0.78	0.05		0.65	0.09	0.08	0.53		0.54	0.13	0.01
Uniform Delay, d1		33.7	26.4		37.5	24.7	29.4	34.1		19.8	23.7	10.3
Progression Factor		1.00	1.00		1.00	1.00	1.00	1.00		1.00	1.00	1.00
Incremental Delay, d2		9.0	0.0		5.6	0.1	0.1	0.8		1.4	0.1	0.0
Delay (s)		42.8	26.5		43.1	24.8	29.5	34.9		21.2	23.8	10.3
Level of Service		D	C		D	C	C	C		C	C	B
Approach Delay (s)		41.5			33.6			34.6			21.6	
Approach LOS		D			C			C			C	

Intersection Summary			
HCM Average Control Delay	32.7	HCM Level of Service	C
HCM Volume to Capacity ratio	0.61		
Actuated Cycle Length (s)	93.3	Sum of lost time (s)	21.0
Intersection Capacity Utilization	68.4%	ICU Level of Service	C
Analysis Period (min)	15		
c Critical Lane Group			

Movement	EBL	EBT	WBT	WBR	SBL	SBR
Lane Configurations						
Volume (veh/h)	15	33	11	2	0	3
Sign Control		Free	Free		Stop	
Grade		0%	0%		0%	
Peak Hour Factor	0.67	0.67	0.54	0.54	0.75	0.75
Hourly flow rate (vph)	22	49	20	4	0	4
Pedestrians						
Lane Width (ft)						
Walking Speed (ft/s)						
Percent Blockage						
Right turn flare (veh)						
Median type		None	None			
Median storage veh)						
Upstream signal (ft)						
pX, platoon unblocked						
vC, conflicting volume	20				116	22
vC1, stage 1 conf vol						
vC2, stage 2 conf vol						
vCu, unblocked vol	20				116	22
tC, single (s)	4.1				6.4	6.2
tC, 2 stage (s)						
tF (s)	2.2				3.5	3.3
p0 queue free %	99				100	100
cM capacity (veh/h)	1596				867	1055

Direction, Lane #	EB 1	WB 1	SB 1
Volume Total	72	24	4
Volume Left	22	0	0
Volume Right	0	4	4
cSH	1596	1700	1055
Volume to Capacity	0.01	0.01	0.00
Queue Length 95th (ft)	1	0	0
Control Delay (s)	2.3	0.0	8.4
Lane LOS	A		A
Approach Delay (s)	2.3	0.0	8.4
Approach LOS			A

Intersection Summary			
Average Delay	2.0		
Intersection Capacity Utilization	19.2%	ICU Level of Service	A
Analysis Period (min)	15		

HCM Unsignalized Intersection Capacity Analysis
100: Route 50 & Goshen Road

LCPS (HS 7)
2009 Existing Mitigated

Movement	EBL	EBT	EBR	WBL	WBT	WBR	NBL	NBT	NBR	SBL	SBT	SBR
Lane Configurations												
Volume (veh/h)	1	272	4	14	1033	4	1	1	14	1	7	4
Sign Control		Free			Free			Stop			Stop	
Grade		0%			0%			0%			0%	
Peak Hour Factor	0.91	0.91	0.91	0.86	0.86	0.86	0.67	0.67	0.67	0.75	0.75	0.75
Hourly flow rate (vph)	1	299	4	16	1201	5	1	1	21	1	9	5
Pedestrians												
Lane Width (ft)												
Walking Speed (ft/s)												
Percent Blockage												
Right turn flare (veh)												
Median type		None			None							
Median storage veh)												
Upstream signal (ft)												
pX, platoon unblocked												
vC, conflicting volume	1206			303			944	1539	149	1407	1539	601
vC1, stage 1 conf vol												
vC2, stage 2 conf vol												
vCu, unblocked vol	1206			303			944	1539	149	1407	1539	601
tC, single (s)	4.1			4.1			7.5	6.5	6.9	7.5	6.5	6.9
tC, 2 stage (s)												
tF (s)	2.2			2.2			3.5	4.0	3.3	3.5	4.0	3.3
p0 queue free %	100			99			99	99	98	99	92	99
cM capacity (veh/h)	574			1254			198	113	870	94	113	444

Direction, Lane #	EB 1	EB 2	EB 3	EB 4	WB 1	WB 2	WB 3	WB 4	NB 1	SB 1
Volume Total	1	149	149	4	16	601	601	5	24	16
Volume Left	1	0	0	0	16	0	0	0	1	1
Volume Right	0	0	0	4	0	0	0	5	21	5
cSH	574	1700	1700	1700	1254	1700	1700	1700	533	147
Volume to Capacity	0.00	0.09	0.09	0.00	0.01	0.35	0.35	0.00	0.04	0.11
Queue Length 95th (ft)	0	0	0	0	1	0	0	0	4	9
Control Delay (s)	11.3	0.0	0.0	0.0	7.9	0.0	0.0	0.0	12.1	32.5
Lane LOS	B				A				B	D
Approach Delay (s)	0.0				0.1				12.1	32.5
Approach LOS									B	D

Intersection Summary				
Average Delay		0.6		
Intersection Capacity Utilization		38.6%	ICU Level of Service	A
Analysis Period (min)		15		

HCM Unsignalized Intersection Capacity Analysis
200: Tall Cedars Pkwy & Gum Spring Road

LCPS (HS 7)
2009 Existing Mitigated

Movement	EBL	EBR	NBL	NBT	SBT	SBR
Lane Configurations						
Volume (veh/h)	15	60	51	164	516	46
Sign Control	Stop			Free	Free	
Grade	0%			0%	0%	
Peak Hour Factor	0.82	0.82	0.86	0.86	0.79	0.79
Hourly flow rate (vph)	18	73	59	191	653	58
Pedestrians						
Lane Width (ft)						
Walking Speed (ft/s)						
Percent Blockage						
Right turn flare (veh)						
Median type				None	None	
Median storage veh)						
Upstream signal (ft)						
pX, platoon unblocked						
vC, conflicting volume	962	653	653			
vC1, stage 1 conf vol						
vC2, stage 2 conf vol						
vCu, unblocked vol	962	653	653			
tC, single (s)	6.4	6.2	4.1			
tC, 2 stage (s)						
tF (s)	3.5	3.3	2.2			
p0 queue free %	93	84	94			
cM capacity (veh/h)	266	467	934			

Direction, Lane #	EB 1	EB 2	NB 1	SB 1	SB 2
Volume Total	18	73	250	653	58
Volume Left	18	0	59	0	0
Volume Right	0	73	0	0	58
cSH	266	467	934	1700	1700
Volume to Capacity	0.07	0.16	0.06	0.38	0.03
Queue Length 95th (ft)	6	14	5	0	0
Control Delay (s)	19.5	14.1	2.7	0.0	0.0
Lane LOS	C	B	A		
Approach Delay (s)	15.2		2.7	0.0	
Approach LOS	C				

Intersection Summary				
Average Delay		2.0		
Intersection Capacity Utilization		51.9%	ICU Level of Service	A
Analysis Period (min)		15		

Movement	EBL	EBT	EBR	WBL	WBT	WBR	NBL	NBT	NBR	SBL	SBT	SBR
Lane Configurations												
Volume (vph)	53	72	35	128	85	79	21	122	58	60	257	12
Ideal Flow (vphpl)	1900	1900	1900	1900	1900	1900	1900	1900	1900	1900	1900	1900
Total Lost time (s)		7.0	7.0		7.0	7.0	7.0	7.0		7.0	7.0	7.0
Lane Util. Factor		1.00	1.00		1.00	1.00	1.00	0.95		1.00	0.95	1.00
Frt		1.00	0.85		1.00	0.85	1.00	0.95		1.00	1.00	0.85
Flt Protected		0.98	1.00		0.97	1.00	0.95	1.00		0.95	1.00	1.00
Satd. Flow (prot)		1824	1583		1808	1583	1770	3367		1770	3539	1583
Flt Permitted		0.98	1.00		0.97	1.00	0.58	1.00		0.53	1.00	1.00
Satd. Flow (perm)		1824	1583		1808	1583	1074	3367		997	3539	1583
Peak-hour factor, PHF	0.77	0.77	0.77	0.78	0.78	0.78	0.87	0.87	0.87	0.90	0.90	0.90
Adj. Flow (vph)	69	94	45	164	109	101	24	140	67	67	286	13
RTOR Reduction (vph)	0	0	31	0	0	71	0	54	0	0	0	8
Lane Group Flow (vph)	0	163	14	0	273	30	24	153	0	67	286	5
Turn Type	Split		pm+ov	Split		pm+ov	pm+pt			pm+pt		pm+ov
Protected Phases	4	4	5	8	8	1	5	2		1	6	4
Permitted Phases			4			8	2			6		6
Actuated Green, G (s)		12.5	15.7		17.2	22.4	15.5	12.3		19.5	14.3	26.8
Effective Green, g (s)		12.5	15.7		17.2	22.4	15.5	12.3		19.5	14.3	26.8
Actuated g/C Ratio		0.17	0.21		0.23	0.30	0.21	0.16		0.26	0.19	0.36
Clearance Time (s)		7.0	7.0		7.0	7.0	7.0	7.0		7.0	7.0	7.0
Vehicle Extension (s)		3.0	3.0		3.0	3.0	3.0	3.0		3.0	3.0	3.0
Lane Grp Cap (vph)		303	330		414	619	251	551		312	673	712
v/s Ratio Prot		c0.09	0.00		c0.15	0.00	0.00	0.05		c0.01	c0.08	0.00
v/s Ratio Perm			0.01			0.02	0.02			0.04		0.00
v/c Ratio		0.54	0.04		0.66	0.05	0.10	0.28		0.21	0.42	0.01
Uniform Delay, d1		28.7	23.8		26.3	18.8	24.0	27.6		21.5	26.8	15.6
Progression Factor		1.00	1.00		1.00	1.00	1.00	1.00		1.00	1.00	1.00
Incremental Delay, d2		1.8	0.1		3.8	0.0	0.2	0.3		0.3	0.4	0.0
Delay (s)		30.5	23.8		30.1	18.8	24.2	27.8		21.8	27.3	15.6
Level of Service		C	C		C	B	C	C		C	C	B
Approach Delay (s)		29.1			27.1			27.5			25.9	
Approach LOS		C			C			C			C	

Intersection Summary			
HCM Average Control Delay	27.1	HCM Level of Service	C
HCM Volume to Capacity ratio	0.47		
Actuated Cycle Length (s)	75.2	Sum of lost time (s)	21.0
Intersection Capacity Utilization	46.2%	ICU Level of Service	A
Analysis Period (min)	15		
c Critical Lane Group			

Movement	EBL	EBT	WBT	WBR	SBL	SBR
Lane Configurations						
Volume (veh/h)	3	12	27	0	0	11
Sign Control		Free	Free		Stop	
Grade		0%	0%		0%	
Peak Hour Factor	0.63	0.63	0.68	0.68	0.69	0.69
Hourly flow rate (vph)	5	19	40	0	0	16
Pedestrians						
Lane Width (ft)						
Walking Speed (ft/s)						
Percent Blockage						
Right turn flare (veh)						
Median type		None	None			
Median storage veh)						
Upstream signal (ft)						
pX, platoon unblocked						
vC, conflicting volume	40				68	40
vC1, stage 1 conf vol						
vC2, stage 2 conf vol						
vCu, unblocked vol	40				68	40
tC, single (s)	4.1				6.4	6.2
tC, 2 stage (s)						
tF (s)	2.2				3.5	3.3
p0 queue free %	100				100	98
cM capacity (veh/h)	1570				934	1032

Direction, Lane #	EB 1	WB 1	SB 1
Volume Total	24	40	16
Volume Left	5	0	0
Volume Right	0	0	16
cSH	1570	1700	1032
Volume to Capacity	0.00	0.02	0.02
Queue Length 95th (ft)	0	0	1
Control Delay (s)	1.5	0.0	8.5
Lane LOS	A		A
Approach Delay (s)	1.5	0.0	8.5
Approach LOS			A

Intersection Summary			
Average Delay	2.2		
Intersection Capacity Utilization	13.3%	ICU Level of Service	A
Analysis Period (min)	15		

Movement	EBL	EBT	EBR	WBL	WBT	WBR	NBL	NBT	NBR	SBL	SBT	SBR
Lane Configurations												
Volume (veh/h)	14	1047	4	10	297	12	2	14	16	5	1	0
Sign Control		Free			Free			Stop			Stop	
Grade		0%			0%			0%			0%	
Peak Hour Factor	0.91	0.91	0.91	0.71	0.71	0.71	0.89	0.89	0.89	0.50	0.50	0.50
Hourly flow rate (vph)	15	1151	4	14	418	17	2	16	18	10	2	0
Pedestrians												
Lane Width (ft)												
Walking Speed (ft/s)												
Percent Blockage												
Right turn flare (veh)												
Median type		None			None							
Median storage veh)												
Upstream signal (ft)												
pX, platoon unblocked												
vC, conflicting volume	435			1155			1420	1645	575	1078	1632	209
vC1, stage 1 conf vol												
vC2, stage 2 conf vol												
vCu, unblocked vol	435			1155			1420	1645	575	1078	1632	209
tC, single (s)	4.1			4.1			7.5	6.5	6.9	7.5	6.5	6.9
tC, 2 stage (s)												
tF (s)	2.2			2.2			3.5	4.0	3.3	3.5	4.0	3.3
p0 queue free %	99			98			98	83	96	93	98	100
cM capacity (veh/h)	1121			601			93	95	461	141	97	797

Direction, Lane #	EB 1	EB 2	EB 3	EB 4	WB 1	WB 2	WB 3	WB 4	NB 1	SB 1
Volume Total	15	575	575	4	14	209	209	17	36	12
Volume Left	15	0	0	0	14	0	0	0	2	10
Volume Right	0	0	0	4	0	0	0	17	18	0
cSH	1121	1700	1700	1700	601	1700	1700	1700	157	131
Volume to Capacity	0.01	0.34	0.34	0.00	0.02	0.12	0.12	0.01	0.23	0.09
Queue Length 95th (ft)	1	0	0	0	2	0	0	0	21	7
Control Delay (s)	8.3	0.0	0.0	0.0	11.1	0.0	0.0	0.0	34.6	35.2
Lane LOS	A				B				D	E
Approach Delay (s)	0.1				0.3				34.6	35.2
Approach LOS									D	E

Intersection Summary				
Average Delay		1.2		
Intersection Capacity Utilization		38.9%	ICU Level of Service	A
Analysis Period (min)		15		

Movement	EBL	EBR	NBL	NBT	SBT	SBR
Lane Configurations						
Volume (veh/h)	38	65	66	263	219	28
Sign Control	Stop			Free	Free	
Grade	0%			0%	0%	
Peak Hour Factor	0.83	0.83	0.85	0.85	0.86	0.86
Hourly flow rate (vph)	46	78	78	309	255	33
Pedestrians						
Lane Width (ft)						
Walking Speed (ft/s)						
Percent Blockage						
Right turn flare (veh)						
Median type				None	None	
Median storage veh)						
Upstream signal (ft)						
pX, platoon unblocked						
vC, conflicting volume	719	255	255			
vC1, stage 1 conf vol						
vC2, stage 2 conf vol						
vCu, unblocked vol	719	255	255			
tC, single (s)	6.4	6.2	4.1			
tC, 2 stage (s)						
tF (s)	3.5	3.3	2.2			
p0 queue free %	88	90	94			
cM capacity (veh/h)	372	784	1310			

Direction, Lane #	EB 1	EB 2	NB 1	SB 1	SB 2
Volume Total	46	78	387	255	33
Volume Left	46	0	78	0	0
Volume Right	0	78	0	0	33
cSH	372	784	1310	1700	1700
Volume to Capacity	0.12	0.10	0.06	0.15	0.02
Queue Length 95th (ft)	10	8	5	0	0
Control Delay (s)	16.0	10.1	2.0	0.0	0.0
Lane LOS	C	B	A		
Approach Delay (s)	12.3		2.0	0.0	
Approach LOS	B				

Intersection Summary				
Average Delay		2.9		
Intersection Capacity Utilization		42.4%	ICU Level of Service	A
Analysis Period (min)		15		

HCM Signalized Intersection Capacity Analysis
300: Braddock Road & Gum Spring Road

LCPS (HS 7)
2009 Existing Mitigated

Movement	EBL	EBT	EBR	WBL	WBT	WBR	NBL	NBT	NBR	SBL	SBT	SBR
Lane Configurations												
Volume (vph)	58	218	18	64	85	90	33	258	135	182	120	26
Ideal Flow (vphpl)	1900	1900	1900	1900	1900	1900	1900	1900	1900	1900	1900	1900
Total Lost time (s)		7.0	7.0		7.0	7.0	7.0	7.0		7.0	7.0	7.0
Lane Util. Factor		1.00	1.00		1.00	1.00	1.00	0.95		1.00	0.95	1.00
Frt		1.00	0.85		1.00	0.85	1.00	0.95		1.00	1.00	0.85
Flt Protected		0.99	1.00		0.98	1.00	0.95	1.00		0.95	1.00	1.00
Satd. Flow (prot)		1843	1583		1824	1583	1770	3357		1770	3539	1583
Flt Permitted		0.99	1.00		0.98	1.00	0.67	1.00		0.28	1.00	1.00
Satd. Flow (perm)		1843	1583		1824	1583	1247	3357		516	3539	1583
Peak-hour factor, PHF	0.83	0.83	0.83	0.88	0.88	0.88	0.87	0.87	0.87	0.92	0.92	0.92
Adj. Flow (vph)	70	263	22	73	97	102	38	297	155	198	130	28
RTOR Reduction (vph)	0	0	7	0	0	75	0	60	0	0	0	13
Lane Group Flow (vph)	0	333	15	0	170	27	38	392	0	198	130	15
Turn Type	Split		pm+ov	Split		pm+ov	pm+pt			pm+pt		pm+ov
Protected Phases	4	4	5	8	8	1	5	2		1	6	4
Permitted Phases			4			8	2			6		6
Actuated Green, G (s)		21.6	23.7		13.4	25.3	21.3	19.2		38.1	29.0	50.6
Effective Green, g (s)		21.6	23.7		13.4	25.3	21.3	19.2		38.1	29.0	50.6
Actuated g/C Ratio		0.23	0.25		0.14	0.27	0.23	0.20		0.40	0.31	0.54
Clearance Time (s)		7.0	7.0		7.0	7.0	7.0	7.0		7.0	7.0	7.0
Vehicle Extension (s)		3.0	3.0		3.0	3.0	3.0	3.0		3.0	3.0	3.0
Lane Grp Cap (vph)		423	399		260	543	294	685		368	1091	969
v/s Ratio Prot		c0.18	0.00		c0.09	0.01	0.00	0.12		c0.07	0.04	0.00
v/s Ratio Perm			0.01			0.01	0.03			c0.15		0.01
v/c Ratio		0.79	0.04		0.65	0.05	0.13	0.57		0.54	0.12	0.02
Uniform Delay, d1		34.1	26.6		38.2	25.5	28.8	33.7		19.6	23.4	10.1
Progression Factor		1.00	1.00		1.00	1.00	1.00	1.00		1.00	1.00	1.00
Incremental Delay, d2		9.4	0.0		5.8	0.0	0.2	1.2		1.5	0.0	0.0
Delay (s)		43.4	26.6		44.0	25.5	29.0	34.9		21.2	23.4	10.1
Level of Service		D	C		D	C	C	C		C	C	B
Approach Delay (s)		42.4			37.0			34.4			21.1	
Approach LOS		D			D			C			C	

Intersection Summary				
HCM Average Control Delay	33.6	HCM Level of Service	C	
HCM Volume to Capacity ratio	0.61			
Actuated Cycle Length (s)	94.1	Sum of lost time (s)	21.0	
Intersection Capacity Utilization	67.6%	ICU Level of Service	C	
Analysis Period (min)	15			
c Critical Lane Group				

HCM Unsignalized Intersection Capacity Analysis
400: Braddock Road & Goshen Road

LCPS (HS 7)
2009 Existing Mitigated

Movement	EBL	EBT	WBT	WBR	SBL	SBR
Lane Configurations						
Volume (veh/h)	22	66	7	3	2	3
Sign Control		Free	Free		Stop	
Grade		0%	0%		0%	
Peak Hour Factor	0.88	0.88	0.31	0.31	0.63	0.63
Hourly flow rate (vph)	25	75	23	10	3	5
Pedestrians						
Lane Width (ft)						
Walking Speed (ft/s)						
Percent Blockage						
Right turn flare (veh)						
Median type		None	None			
Median storage veh)						
Upstream signal (ft)						
pX, platoon unblocked						
vC, conflicting volume	23				152	27
vC1, stage 1 conf vol						
vC2, stage 2 conf vol						
vCu, unblocked vol	23				152	27
tC, single (s)	4.1				6.4	6.2
tC, 2 stage (s)						
tF (s)	2.2				3.5	3.3
p0 queue free %	98				100	100
cM capacity (veh/h)	1593				826	1048

Direction, Lane #	EB 1	WB 1	SB 1
Volume Total	100	32	8
Volume Left	25	0	3
Volume Right	0	10	5
cSH	1593	1700	946
Volume to Capacity	0.02	0.02	0.01
Queue Length 95th (ft)	1	0	1
Control Delay (s)	1.9	0.0	8.8
Lane LOS	A		A
Approach Delay (s)	1.9	0.0	8.8
Approach LOS			A

Intersection Summary			
Average Delay	1.9		
Intersection Capacity Utilization	21.4%	ICU Level of Service	A
Analysis Period (min)	15		

HCM Unsignalized Intersection Capacity Analysis
100: Route 50 & Goshen Road

LCPS (HS 7)
2009 Existing Mitigated

Movement	EBL	EBT	EBR	WBL	WBT	WBR	NBL	NBT	NBR	SBL	SBT	SBR
Lane Configurations												
Volume (veh/h)	4	310	3	11	652	2	2	1	5	1	3	2
Sign Control		Free			Free			Stop			Stop	
Grade		0%			0%			0%			0%	
Peak Hour Factor	0.91	0.91	0.91	0.89	0.89	0.89	1.00	1.00	1.00	0.50	0.50	0.50
Hourly flow rate (vph)	4	341	3	12	733	2	2	1	5	2	6	4
Pedestrians												
Lane Width (ft)												
Walking Speed (ft/s)												
Percent Blockage												
Right turn flare (veh)												
Median type		None			None							
Median storage veh)												
Upstream signal (ft)												
pX, platoon unblocked												
vC, conflicting volume	735			344			747	1109	170	942	1110	366
vC1, stage 1 conf vol												
vC2, stage 2 conf vol												
vCu, unblocked vol	735			344			747	1109	170	942	1110	366
tC, single (s)	4.1			4.1			7.5	6.5	6.9	7.5	6.5	6.9
tC, 2 stage (s)												
tF (s)	2.2			2.2			3.5	4.0	3.3	3.5	4.0	3.3
p0 queue free %	99			99			99	100	99	99	97	99
cM capacity (veh/h)	866			1212			289	205	844	213	205	631

Direction, Lane #	EB 1	EB 2	EB 3	EB 4	WB 1	WB 2	WB 3	WB 4	NB 1	SB 1
Volume Total	4	170	170	3	12	366	366	2	8	12
Volume Left	4	0	0	0	12	0	0	0	2	2
Volume Right	0	0	0	3	0	0	0	2	5	4
cSH	866	1700	1700	1700	1212	1700	1700	1700	452	267
Volume to Capacity	0.01	0.10	0.10	0.00	0.01	0.22	0.22	0.00	0.02	0.05
Queue Length 95th (ft)	0	0	0	0	1	0	0	0	1	4
Control Delay (s)	9.2	0.0	0.0	0.0	8.0	0.0	0.0	0.0	13.1	19.1
Lane LOS	A				A				B	C
Approach Delay (s)	0.1				0.1				13.1	19.1
Approach LOS									B	C

Intersection Summary				
Average Delay		0.4		
Intersection Capacity Utilization		28.0%	ICU Level of Service	A
Analysis Period (min)		15		

HCM Unsignalized Intersection Capacity Analysis
200: Tall Cedars Pkwy & Gum Spring Road

LCPS (HS 7)
2009 Existing Mitigated

Movement	EBL	EBR	NBL	NBT	SBT	SBR
Lane Configurations						
Volume (veh/h)	21	67	49	145	425	42
Sign Control	Stop			Free	Free	
Grade	0%			0%	0%	
Peak Hour Factor	0.71	0.71	0.84	0.84	0.91	0.91
Hourly flow rate (vph)	30	94	58	173	467	46
Pedestrians						
Lane Width (ft)						
Walking Speed (ft/s)						
Percent Blockage						
Right turn flare (veh)						
Median type				None	None	
Median storage veh)						
Upstream signal (ft)						
pX, platoon unblocked						
vC, conflicting volume	756	467	467			
vC1, stage 1 conf vol						
vC2, stage 2 conf vol						
vCu, unblocked vol	756	467	467			
tC, single (s)	6.4	6.2	4.1			
tC, 2 stage (s)						
tF (s)	3.5	3.3	2.2			
p0 queue free %	92	84	95			
cM capacity (veh/h)	356	596	1094			

Direction, Lane #	EB 1	EB 2	NB 1	SB 1	SB 2
Volume Total	30	94	231	467	46
Volume Left	30	0	58	0	0
Volume Right	0	94	0	0	46
cSH	356	596	1094	1700	1700
Volume to Capacity	0.08	0.16	0.05	0.27	0.03
Queue Length 95th (ft)	7	14	4	0	0
Control Delay (s)	16.0	12.2	2.5	0.0	0.0
Lane LOS	C	B	A		
Approach Delay (s)	13.1		2.5	0.0	
Approach LOS	B				

Intersection Summary				
Average Delay		2.5		
Intersection Capacity Utilization		46.0%	ICU Level of Service	A
Analysis Period (min)		15		

Movement	EBL	EBT	EBR	WBL	WBT	WBR	NBL	NBT	NBR	SBL	SBT	SBR
Lane Configurations												
Volume (vph)	50	67	31	80	107	78	18	122	45	51	219	19
Ideal Flow (vphpl)	1900	1900	1900	1900	1900	1900	1900	1900	1900	1900	1900	1900
Total Lost time (s)		7.0	7.0		7.0	7.0	7.0	7.0		7.0	7.0	7.0
Lane Util. Factor		1.00	1.00		1.00	1.00	1.00	0.95		1.00	0.95	1.00
Frt		1.00	0.85		1.00	0.85	1.00	0.96		1.00	1.00	0.85
Flt Protected		0.98	1.00		0.98	1.00	0.95	1.00		0.95	1.00	1.00
Satd. Flow (prot)		1824	1583		1824	1583	1770	3396		1770	3539	1583
Flt Permitted		0.98	1.00		0.98	1.00	0.57	1.00		0.55	1.00	1.00
Satd. Flow (perm)		1824	1583		1824	1583	1064	3396		1025	3539	1583
Peak-hour factor, PHF	0.62	0.62	0.62	0.86	0.86	0.86	0.94	0.94	0.94	0.74	0.74	0.74
Adj. Flow (vph)	81	108	50	93	124	91	19	130	48	69	296	26
RTOR Reduction (vph)	0	0	31	0	0	67	0	36	0	0	0	16
Lane Group Flow (vph)	0	189	19	0	217	24	19	142	0	69	296	10
Turn Type	Split		pm+ov	Split		pm+ov	pm+pt			pm+pt		pm+ov
Protected Phases	4	4	5	8	8	1	5	2		1	6	4
Permitted Phases			4			8	2			6		6
Actuated Green, G (s)		13.5	16.7		14.6	19.8	15.5	12.3		19.5	14.3	27.8
Effective Green, g (s)		13.5	16.7		14.6	19.8	15.5	12.3		19.5	14.3	27.8
Actuated g/C Ratio		0.18	0.23		0.20	0.27	0.21	0.17		0.26	0.19	0.38
Clearance Time (s)		7.0	7.0		7.0	7.0	7.0	7.0		7.0	7.0	7.0
Vehicle Extension (s)		3.0	3.0		3.0	3.0	3.0	3.0		3.0	3.0	3.0
Lane Grp Cap (vph)		335	359		362	576	255	568		324	688	748
v/s Ratio Prot		c0.10	0.00		c0.12	0.00	0.00	0.04		c0.02	c0.08	0.00
v/s Ratio Perm			0.01			0.01	0.01			0.04		0.00
v/c Ratio		0.56	0.05		0.60	0.04	0.07	0.25		0.21	0.43	0.01
Uniform Delay, d1		27.4	22.3		26.8	19.9	23.2	26.6		20.7	26.1	14.3
Progression Factor		1.00	1.00		1.00	1.00	1.00	1.00		1.00	1.00	1.00
Incremental Delay, d2		2.2	0.1		2.7	0.0	0.1	0.2		0.3	0.4	0.0
Delay (s)		29.5	22.3		29.5	19.9	23.3	26.9		21.0	26.5	14.3
Level of Service		C	C		C	B	C	C		C	C	B
Approach Delay (s)		28.0			26.7			26.5			24.7	
Approach LOS		C			C			C			C	

Intersection Summary				
HCM Average Control Delay	26.3	HCM Level of Service	C	
HCM Volume to Capacity ratio	0.45			
Actuated Cycle Length (s)	73.6	Sum of lost time (s)	21.0	
Intersection Capacity Utilization	43.6%	ICU Level of Service	A	
Analysis Period (min)	15			
c Critical Lane Group				

Movement	EBL	EBT	WBT	WBR	SBL	SBR
Lane Configurations						
Volume (veh/h)	3	11	26	1	0	4
Sign Control		Free	Free		Stop	
Grade		0%	0%		0%	
Peak Hour Factor	0.50	0.50	0.84	0.84	0.50	0.50
Hourly flow rate (vph)	6	22	31	1	0	8
Pedestrians						
Lane Width (ft)						
Walking Speed (ft/s)						
Percent Blockage						
Right turn flare (veh)						
Median type		None	None			
Median storage veh)						
Upstream signal (ft)						
pX, platoon unblocked						
vC, conflicting volume	31				66	32
vC1, stage 1 conf vol						
vC2, stage 2 conf vol						
vCu, unblocked vol	31				66	32
tC, single (s)	4.1				6.4	6.2
tC, 2 stage (s)						
tF (s)	2.2				3.5	3.3
p0 queue free %	100				100	99
cM capacity (veh/h)	1582				936	1042

Direction, Lane #	EB 1	WB 1	SB 1
Volume Total	28	32	8
Volume Left	6	0	0
Volume Right	0	1	8
cSH	1582	1700	1042
Volume to Capacity	0.00	0.02	0.01
Queue Length 95th (ft)	0	0	1
Control Delay (s)	1.6	0.0	8.5
Lane LOS	A		A
Approach Delay (s)	1.6	0.0	8.5
Approach LOS			A

Intersection Summary			
Average Delay	1.6		
Intersection Capacity Utilization	13.3%	ICU Level of Service	A
Analysis Period (min)	15		

APPENDIX E

VDOT'S HISTORICAL GROWTH DATA

Project #: 2110.013

Project Name: HS-7

Jurisdiction: Loudoun County, VA

Inherent Growth Rate

(Based on VDOT's AADT Historical Data)

Roadway Segment	From	To	2003 AADT	2004 AADT	2005 AADT	2006 AADT	2007 AADT	2008 AADT	Comparison 2006-2007	Comparison 2003-2008	Comparison 2007-2008	Comparison 2006-2008
Gum Spring Road	Braddock Road	Route 50	7100	7700	12000	12,000	13,000	9,600	8%	6%	-26%	-11%
Braddock Road	Goshen Road	Gum Spring Road	190	190	190	190	190	190	0%	0%	0%	0%
Route 50	US 15	Pinebrook Road	17000	19000	18000	18,000	20,000	15,000	11%	-2%	-25%	-9%
Goshen Road	Braddock Road	1.92 MN 53-620	340	300	740	740	740	740	0%	17%	0%	0%

APPENDIX F

APPROVED DEVELOPMENT TRIP GENERATION AND SITE VOLUMES (2012)

FUTURE VOLUME PROJECTIONS MEMORANDUM AND EMAIL CORRESPONDENCE

Table 1: 2012 FUTURE BACKGROUND TRIP GENERATION WORKSHEET

Land Use	ITE Code	Size	------ Weekday ------ AM Peak Hour In	AM Peak Hour Out	AM Peak Hour Total	PM Peak Hour In	PM Peak Hour Out	PM Peak Hour Total	Daily Total
Westport By-Right Property									
Single-Family Detached Housing	210	148 DU	29	85	114	97	56	153	1,492
Lenah Property									
Single-Family Detached Housing	210	57 DU	13	37	50	41	24	65	620
Stone Ridge									
Residential		222 DU	5	38	43	31	16	48	1,128
Retail/Ancellary Use		25,331 SF	108	86	194	50	52	102	1,114
Subtotal Stone Ridge Trips			113	124	237	81	68	149	2,241
Marrwood Property									
Single-Family Detached Housing	210	73 DU	15	46	61	52	29	81	779
C.D. Smith									
Single-Family Detached Housing	210	77 DU	16	47	63	54	30	84	765
Residential Condominium/Townhouse	230	107 DU	9	46	55	43	21	64	931
Subtotal C.D.Smith Trips		184 DU	25	92	117	97	51	148	1,696
Kirkpatrick Farms									
Single-Family Detached Housing	210	87 DU	18	53	71	60	35	95	915
Residential Condominium/Townhouse	220	12 DU	2	8	10	17	8	25	223
Subtotal Kirkpatrick Farms Trips		98 DU	20	61	81	77	43	120	1,138
Kirkpatrick Farms West									
Single-Family Detached Housing	210	95 DU	19	57	76	65	37	102	945
Single-Family Attached Housing	230	92 DU	8	40	48	38	18	56	800
Subtotal Kirkpatrick Farms West Trips		187 DU	27	97	124	103	55	158	1,745
Braddock Corner									
Single-Family Detached Housing	210	15 DU	5	15	20	13	7	20	182
Single-Family Attached Housing	230	31 DU	4	17	21	17	7	24	238
Subtotal Braddock Corner Trips		46	9	32	41	30	14	44	420
Greenfields Property									
Single-Family Detached Housing	210	125 DU	25	72	97	84	48	132	1,277
Gum Spring Village Center									
Subtotal Gum Spring Village Center Trips			68	57	125	141	140	280	2,631
Providence Glen									
Single-Family Detached Housing	210	20 DU	6	17	23	16	9	25	200
Single-Family Attached Housing	230	59 DU	6	28	34	26	13	39	513
Subtotal Providence Glen Trips		79	12	45	57	42	22	64	713
Braddock Crossing									
Single-Family Detached Housing	210	11 DU	5	13	18	10	5	15	137
Single-Family Attached Housing	230	25 DU	4	14	18	14	6	20	198
Subtotal Braddock Crossing Trips		36	9	27	36	24	10	35	335
Loudoun County Public School MS 5									
Middle School	522	1,350 Students	401	328	729	106	110	216	2,187
TOTAL FUTURE BACKGROUND TRIPS			**766**	**1,103**	**1,869**	**975**	**670**	**1,645**	**17,274**

2012 FB AM — **Braddock Road and Gum Spring Road**

	NB			SB			EB			WB		
	L	T	R	L	T	R	L	T	R	L	T	R
LCPS MS-5				28				100			82	23
Westport By-Right	0	0	0	0	0	3	10	9	0	0	3	0
Lenah Property	0	0	0	0	0	1	2	7	0	0	2	0
Braddock Crossing	0	0	0	0	0	0	1	4	0	0	2	0
Stoneridge Residential	0	0	0	1	1	1	0	0	0	0	0	0
Stoneridge Retail/Ancellary Uses	0	3	0	3	2	1	2	0	0	0	0	4
Marrwood Property							1	5			2	
C.D.Smith	2					4	16	39	6		11	
Kirkpatrick Farms	1	0	0	0	0	1	2	4	2	0	1	0
Kirkpatrick Farms West						3	13	22	1		6	
Braddock Corner		2		12	9	7	2					3
Providence Glen		1		11	5	7	2					3
Gum Spring Village Center	0	3	0	1	3	1	1	0	0	0	0	1
Greenfields Property	0	0	0	0	0	2	4	11	1	0	4	0
Total Trips (Commuter Peak)	**3**	**9**	**0**	**27**	**20**	**31**	**57**	**101**	**11**	**0**	**31**	**10**
Total Trips (ES Peak)	**3**	**8**	**0**	**26**	**19**	**29**	**54**	**96**	**10**	**0**	**30**	**10**
Total Trips (HS Peak)	**3**	**9**	**0**	**55**	**20**	**31**	**57**	**201**	**11**	**0**	**113**	**33**

2012 FB AM — **Braddock Road and Goshen Road**

	NB			SB			EB			WB		
	L	T	R	L	T	R	L	T	R	L	T	R
LCPS MS-5								100			82	
Westport By-Right	0	0	0	0	0	0	0	24	0	0	8	0
Lenah Property	0	0	0	0	0	0	0	12	0	0	8	0
Braddock Crossing	0	0	0	0	0	0	0	8	0	0	5	0
Stoneridge Residential	0	0	0	0	0	0	0	0	0	0	1	0
Stoneridge Retail/Ancellary Uses	0	0	0	0	0	0	0	2	0	0	1	0
Marrwood Property								11			4	
C.D.Smith								6			22	
Kirkpatrick Farms	0	0	0	0	0	0	0	1	0	0	2	0
Kirkpatrick Farms West								5			18	
Braddock Corner								1			6	
Providence Glen								1			4	
Gum Spring Village Center	0	0	0	0	0	0	0	1	0	0	1	0
Greenfields Property	0	0	0	0	0	0	0	9	0	0	4	0
Total Trips (Commuter Peak)	**0**	**0**	**0**	**0**	**0**	**0**	**0**	**80**	**0**	**0**	**84**	**0**
Total Trips (ES Peak)	**0**	**0**	**0**	**0**	**0**	**0**	**0**	**76**	**0**	**0**	**80**	**0**
Total Trips (HS Peak)	**0**	**0**	**0**	**0**	**0**	**0**	**0**	**180**	**0**	**0**	**166**	**0**

2012 FB AM — **Route 50 and Goshen Road**

	NB			SB			EB			WB		
	L	T	R	L	T	R	L	T	R	L	T	R
LCPS MS-5												
Westport By-Right	2	0	2	0	0	0	0	4	1	1	11	0
Lenah Property	0	0	0	0	0	0	0	7	0	0	3	0
Braddock Crossing	0	0	0	0	0	0	0	5	0	0	2	0
Stoneridge Residential	0	0	0	0	0	0	0	0	0	0	1	0
Stoneridge Retail/Ancellary Uses	0	0	0	0	0	0	0	2	0	0	2	0
Marrwood Property	7		11						2	4		
C.D.Smith								0			1	
Kirkpatrick Farms	0	0	0	0	0	0	0	0	0	0	0	0
Kirkpatrick Farms West												
Braddock Corner								0			1	
Providence Glen								1			3	
Gum Spring Village Center	0	0	0	0	0	0	0	0	0	0	1	0
Greenfields Property	0	0	0	0	0	0	0	1	0	0	0	0
Total Trips (Commuter Peak)	**9**	**0**	**13**	**0**	**0**	**0**	**0**	**21**	**3**	**5**	**25**	**0**
Total Trips (ES Peak)	**9**	**0**	**12**	**0**	**0**	**0**	**0**	**20**	**3**	**5**	**24**	**0**
Total Trips (HS Peak)	**9**	**0**	**13**	**0**	**0**	**0**	**0**	**21**	**3**	**5**	**25**	**0**

2012 FB AM — **Braddock Rd and North Star Blvd. (Rel Rt.659)**

	NB			SB			EB			WB		
	L	T	R	L	T	R	L	T	R	L	T	R
LCPS MS-5								100			82	
Westport By-Right				0	0	0		20			7	0
Lenah Property				0	0	0		9			3	0
Braddock Crossing				0	0	0	0	6	0	0	2	0
Stoneridge Residential				0	0	0		0			1	0
Stoneridge Retail/Ancellary Uses				0	0	0		2			1	0
Marrwood Property								6			2	
C.D.Smith				60	0	32	9					16
Kirkpatrick Farms				0	0	0		1			23	0
Kirkpatrick Farms West								5			18	
Braddock Corner								1			7	
Providence Glen								2			4	
Gum Spring Village Center	0	0	0	0	0	0	0	0	0	0	3	0
Greenfields Property				0	0	0		17			6	0
Total Trips (Commuter Peak)	**0**	**0**	**0**	**60**	**0**	**32**	**9**	**68**	**0**	**0**	**77**	**16**
Total Trips (ES Peak)	**0**	**0**	**0**	**57**	**0**	**31**	**9**	**65**	**0**	**0**	**73**	**15**
Total Trips (HS Peak)	**0**	**0**	**0**	**60**	**0**	**32**	**9**	**168**	**0**	**0**	**159**	**16**

2012 FB AM — **Gum Spring and Tall Cedars Pkwy**

	NB			SB			EB			WB		
	L	T	R	L	T	R	L	T	R	L	T	R
LCPS MS-5		23			28							
Westport By-Right	0		10	0	3	0	0	0	0	0	0	0
Lenah Property	0		2	0	1	0	0	0	0	0	0	0
Braddock Crossing	0	1	0	0	0	0	0	0	0	0	0	0
Stoneridge Residential	0		0	0	0	0	1	0	3	0	0	0
Stoneridge Retail/Ancellary Uses	5		0	0	0	6	5	0	6	0	0	0
Marrwood Property		0	1		0							
C.D.Smith		0	13		4							
Kirkpatrick Farms	0		2	0	1	0	0	0	0	0	0	0
Kirkpatrick Farms West		0	13		3							
Braddock Corner		1	7		2							
Providence Glen		0	15		4							
Gum Spring Village Center	0	6	0	0	1	0	0	0	0	0	0	0
Greenfields Property	0		4	0	2	0	0	0	0	0	0	0
Total Trips (Commuter Peak)	**6**	**8**	**68**	**0**	**21**	**6**	**6**	**0**	**9**	**0**	**0**	**0**
Total Trips (ES Peak)	**6**	**7**	**64**	**0**	**20**	**6**	**6**	**0**	**9**	**0**	**0**	**0**
Total Trips (HS Peak)	**6**	**31**	**68**	**0**	**49**	**6**	**6**	**0**	**9**	**0**	**0**	**0**

2012 FB PM — **Braddock Road and Gum Spring Road**

	NB			SB			EB			WB		
	L	T	R	L	T	R	L	T	R	L	T	R
LCPS MS-5				13				47			58	16
Westport By-Right	0	0	0	0	0	11	6	6	0	0	10	0
Lenah Property	0	0	0	0	0	3	1	4	0	0	8	0
Braddock Crossing	0	0	0	0	0	2	1	3	0	0	6	0
Stoneridge Residential	0	1	0	0	0	0	1	0	0	0	0	1
Stoneridge Retail/Ancellary Uses	0	1	0	2	1	2	1	0	0	0	0	2
Marrwood Property						1	1	3			6	
C.D.Smith	6					16	9	21	3		41	
Kirkpatrick Farms	2	0	0	0	0	2	1	2	1	0	4	0
Kirkpatrick Farms West	2					13	7	13	1		24	
Braddock Corner		10		7	5	4	7					14
Providence Glen		4		5	2	3	6					11
Gum Spring Village Center	0	6	0	1	6	2	2	0	0	0	0	1
Greenfields Property	2	0	0	0	0	5	3	7	1	0	13	0
Total Trips (Commuter Peak)	**12**	**22**	**0**	**15**	**15**	**63**	**46**	**59**	**6**	**0**	**112**	**29**
Total Trips (ES Peak)	**9**	**18**	**0**	**25**	**12**	**49**	**36**	**93**	**5**	**0**	**145**	**38**
Total Trips (HS Peak)	**10**	**20**	**0**	**13**	**13**	**55**	**40**	**51**	**5**	**0**	**97**	**25**

2012 FB PM — **Braddock Road and Goshen Road**

	NB			SB			EB			WB		
	L	T	R	L	T	R	L	T	R	L	T	R
LCPS MS-5								47			58	
Westport By-Right	0	0	0	0	0	0	0	14	0	0	25	0
Lenah Property	0	0	0	0	0	0	0	8	0	0	15	0
Braddock Crossing	0	0	0	0	0	0	0	6	0	0	9	0
Stoneridge Residential	0	0	0	0	0	0	0	1	0	0	0	0
Stoneridge Retail/Ancellary Uses	0	0	0	0	0	0	0	1	0	0	1	0
Marrwood Property								7			13	
C.D.Smith								24			12	
Kirkpatrick Farms	0	0	0	0	0	0	0	2	0	0	1	0
Kirkpatrick Farms West								19			10	
Braddock Corner								6			3	
Providence Glen								4			2	
Gum Spring Village Center	0	0	0	0	0	0	0	2	0	0	1	0
Greenfields Property	0	0	0	0	0	0	0	6	0	0	11	0
Total Trips (Commuter Peak)	**0**	**0**	**0**	**0**	**0**	**0**	**0**	**99**	**0**	**0**	**103**	**0**
Total Trips (ES Peak)	**0**	**0**	**0**	**0**	**0**	**0**	**0**	**124**	**0**	**0**	**138**	**0**
Total Trips (HS Peak)	**0**	**0**	**0**	**0**	**0**	**0**	**0**	**86**	**0**	**0**	**89**	**0**

2012 FB PM — **Route 50 and Goshen Road**

	NB			SB			EB			WB		
	L	T	R	L	T	R	L	T	R	L	T	R
LCPS MS-5												
Westport By-Right	1	0	1	0	0	0	0	11	2	2	5	0
Lenah Property	0	0	0	0	0	0	0	5	0	0	9	0
Braddock Crossing	0	0	0	0	0	0	0	3	0	0	6	0
Stoneridge Residential	0	0	0	0	0	0	0	1	0	0	0	0
Stoneridge Retail/Ancellary Uses	0	0	0	0	0	0	0	1	0	0	1	0
Marrwood Property	4		7						8	15		
C.D.Smith								1			0	
Kirkpatrick Farms	0	0	0	0	0	0	0	0	0	0	0	0
Kirkpatrick Farms West												
Braddock Corner								1			1	
Providence Glen								17			15	
Gum Spring Village Center	0	0	0	0	0	0	0	0	0	0	0	0
Greenfields Property	0	0	0	0	0	0	0	0	0	0	1	0
Total Trips (Commuter Peak)	**5**	**0**	**8**	**0**	**0**	**0**	**0**	**41**	**10**	**17**	**38**	**0**
Total Trips (ES Peak)	**4**	**0**	**6**	**0**	**0**	**0**	**0**	**32**	**8**	**13**	**30**	**0**
Total Trips (HS Peak)	**4**	**0**	**7**	**0**	**0**	**0**	**0**	**35**	**9**	**15**	**33**	**0**

2012 FB PM — **Braddock Rd and North Star Blvd. (Rel Rt.659)**

	NB			SB			EB			WB		
	L	T	R	L	T	R	L	T	R	L	T	R
LCPS MS-5								47			58	
Westport By-Right				0		0	0	12			21	0
Lenah Property				0		0	0	6			11	0
Braddock Crossing				0	0	0	0	4	0	0	7	0
Stoneridge Residential				0		0	0	1			0	0
Stoneridge Retail/Ancellary Uses				0		0	0	1			1	0
Marrwood Property								4			7	
C.D.Smith				33		17	34					63
Kirkpatrick Farms				0		0	0	2			1	0
Kirkpatrick Farms West								19			10	
Braddock Corner								7			4	
Providence Glen								6			2	
Gum Spring Village Center	0	0	0	0	0	0	0	8	0	0	4	0
Greenfields Property				0		0	0	11			20	0
Total Trips (Commuter Peak)	**0**	**0**	**0**	**33**	**0**	**17**	**34**	**80**	**0**	**0**	**88**	**63**
Total Trips (ES Peak)	**0**	**0**	**0**	**26**	**0**	**13**	**27**	**109**	**0**	**0**	**127**	**49**
Total Trips (HS Peak)	**0**	**0**	**0**	**29**	**0**	**15**	**30**	**70**	**0**	**0**	**77**	**55**

2012 FB PM — **Gum Spring and Tall Cedars Pkwy**

	NB			SB			EB			WB		
	L	T	R	L	T	R	L	T	R	L	T	R
LCPS MS-5		16			13							
Westport By-Right	0		6	0	11	0	0	0	0	0	0	0
Lenah Property	0		1	0	3	0	0	0	0	0	0	0
Braddock Crossing	0	1	0	0	2	0	0	0	0	0	0	0
Stoneridge Residential	3		0	0	0	1	1	0	1	0	0	0
Stoneridge Retail/Ancellary Uses	3		0	0	0	3	3	0	4	0	0	0
Marrwood Property		0	1		1							
C.D.Smith		0	7		14							
Kirkpatrick Farms	0		1	0	2	0	0	0	0	0	0	0
Kirkpatrick Farms West		0	7		13							
Braddock Corner		1	4		9							
Providence Glen		1	7		18							
Gum Spring Village Center	0	1	0	0	2	0	0	0	0	0	0	0
Greenfields Property	0		3	0	5	0	0	0	0	0	0	0
Total Trips (Commuter Peak)	**5**	**4**	**37**	**0**	**79**	**4**	**4**	**0**	**5**	**0**	**0**	**0**
Total Trips (ES Peak)	**4**	**19**	**29**	**0**	**74**	**3**	**3**	**0**	**4**	**0**	**0**	**0**
Total Trips (HS Peak)	**4**	**3**	**32**	**0**	**68**	**4**	**3**	**0**	**4**	**0**	**0**	**0**

Anushree Goradia

From: phillips, george [George.Phillips@loudoun.gov]
Sent: Monday, February 08, 2010 4:48 PM
To: Dabestani, Cina; Tushar Awar
Cc: Anushree Goradia; Mosurak, Lou
Subject: RE: HS-7 Scoping Meeting Follow Up (High School - Loudoun County)

Cina and Tushar- 2/8/10

We specifically recommend using the Loudoun Growth Summary in our FSM Traffic Scoping Guidelines so I am comfortable with the Loudoun County growth summary info plus the 2% inherent as well.

Thanks, George

From: Dabestani, Cina [mailto:Cina.Dabestani@VDOT.Virginia.gov]
Sent: Monday, February 08, 2010 8:56 AM
To: Tushar Awar; phillips, george
Cc: Anushree Goradia
Subject: RE: HS-7 Scoping Meeting Follow Up (High School - Loudoun County)

Tushar,

I am o.k. with this suggestion of yours.

--Cina

From: Tushar Awar [mailto:tushar.awar@goroveslade.com]
Sent: Monday, February 08, 2010 8:55 AM
To: Dabestani, Cina; phillips, george
Cc: Anushree Goradia
Subject: RE: HS-7 Scoping Meeting Follow Up (High School - Loudoun County)

Cina,

Thanks for your review. The growth rate generated by the background developments alone is 13.3% which is 2% higher than what the Loudoun County Growth Summary is suggesting (11.2%). We will include the 2% growth per year, but will adjust the background developments to match the Loudoun County Growth Summary. Is that ok?

We are not suggesting no growth at all, as that is not realistic. What we are suggesting is that the inherent growth (2% per year) and trips generated by the background developments match the Loudoun County Growth Summary projection of 11.2% per year.

-Tushar

Tushar A. Awar, P.E., PTOE
Project Manager
Gorove/Slade Associates, Inc.
p: 703-787-9595 ext. 109 | f: 703-787-9905

From: Dabestani, Cina [mailto:Cina.Dabestani@VDOT.Virginia.gov]
Sent: Monday, February 08, 2010 8:47 AM
To: Tushar Awar; phillips, george
Cc: Anushree Goradia
Subject: RE: HS-7 Scoping Meeting Follow Up (High School - Loudoun County)

Tushar,

A short time period of 2004-2009 when bottom has fallen out of the nation's economy which in turn shows no growth is not acceptable for such decision as NOT to add 2% background growth.

Therefore, no I disagree with your proposal of not including 2% growth per year.

--Cina

From: Tushar Awar [mailto:tushar.awar@goroveslade.com]
Sent: Friday, February 05, 2010 2:13 PM
To: Dabestani, Cina; phillips, george
Cc: Anushree Goradia
Subject: RE: HS-7 Scoping Meeting Follow Up (High School - Loudoun County)

George and Cina,

I wanted to follow up with you on the background assumptions for the proposed High School project in Loudoun County. Based on the background assumptions agreed to at the scoping meeting, we evaluated the future traffic projections along Route 620 (Braddock Road) and Route 659 (Gum Spring Road). However, the actual traffic counts comparison provided in the document shows that there has been no growth in traffic volumes along Route 620 and Route 659 (comparing 2004 and 2009 counts).

We have adjusted our background traffic assumptions to match with the Loudoun County's Growth Summary. Trips generated by the background developments exclusively show a growth rate higher than the Loudoun County Growth Summary projections. Hence, we request that an additional inherent growth rate of 2% per year should not be applied to these roads in order to avoid double counting and unrealistic projections. The attached document summarizes our findings.

Please review the attached document and let us know if you have any questions. Thanks for your help in reviewing this in advance.

Thanks,
Tushar

Tushar A. Awar, P.E., PTOE
Project Manager
Gorove/Slade Associates, Inc.
p: 703-787-9595 ext. 109 | f: 703-787-9905

From: Tushar Awar
Sent: Monday, December 07, 2009 9:50 AM
To: 'Dabestani, Cina'
Cc: Christopher M. Tacinelli; Anushree Goradia; 'phillips, george'; 'Raj, Arun A.'; Faghri, Arsalan
Subject: HS-7 Scoping Meeting Follow Up (High School - Loudoun County)

Cina,

We recently had a scoping meeting with VDOT and OTS for the proposed High School and Elementary School project in Loudoun County, VA. The proposed location is along existing Goshen Road in the Stoneridge area. At the scoping meeting, the background traffic assumptions were discussed. George Phillips represented OTS and provided his thoughts and recommendations for the assumptions. However, since VDOT Planning was not at the meeting, it was decided that information regarding background assumptions and inherent growth for the regional roads will be submitted electronically to OTS and VDOT Planning staff for review. Attached is the memorandum, which summarizes this information. Please review the attached document and let us know if you agree with the assumptions and if you have any comments or questions.

We'll greatly appreciate your feedback. Thanks.

-Tushar

Tushar A. Awar, P.E., PTOE
Project Manager

Gorove/Slade Associates, Inc.
Transportation, Traffic, and Parking
p: 703-787-9595 ext. 109 | f: 703-787-9905
3914 Centreville Road, Suite 330 | Chantilly, VA 20151
tushar.awar@goroveslade.com | www.goroveslade.com

Please consider the environment before printing this email. Thank you.

BACKGROUND TRAFFIC CALCULATIONS

The proposed HS 7 site is located along Goshen Road, west of Route 659 and north of Braddock Road. The primary study intersections identified in the scope are located along Braddock Road (Route 620) and Gum Spring Road (Route 659). A comparison of actual traffic counts conducted at the intersection of Route 659 and Route 620 was compiled from the year 2004 to 2009 (current). The assumptions presented in the Loudoun County Growth Summary were also evaluated. In addition, the growth rate based on trips generated by background developments assumed in the study was also evaluated. The findings are presented below:

- Based on actual field counts at the intersection of Route 659 and Route 620, there has been no change in the traffic volumes during the peak hours (AM and PM) at this intersection from 2004 to 2009. In fact, the volumes have slightly decreased (-0.1%). Please see **Table 1** for details.
- The Loudoun County growth summary shows an 11.2% increase per year from 2009 to 2015, based on household and employment trends. Please see **Table 2** for details.
- The trips generated by background developments included in the traffic study, show a 13.3% increase in traffic per year from 2009 to 2015. This does not include the inherent growth and is purely based on trips generated by background developments. Please see **Table 3** for details and the list of background assumptions (inside and outside the study area).

The table below summarizes the findings presented above:

Route 659 and Route 620 DATA SOURCE	ANNUAL GROWTH CALCULATIONS
ACTUAL FIELD COUNTS	-0.1%
LOUDOUN COUNTY GROWTH SUMMARY	11.2%
BACKGROUND DEVELOPMENTS	13.3%

The results presented in the table above show that there has been no change in traffic volume along Route 659 and Route 620. The trips generated by background developments project a higher annual growth rate than the Loudoun County Growth Summary assumptions. The original scoping document calls for, in addition to trips generated by the background developments, an inherent growth of 2% per year to be applied to Route 659 and Route 620. Based on the findings presented above, the trips generated by the background developments alone account for the traffic growth in the area at 13.3%, which is even higher than the Loudoun County Growth Summary projections. Hence, we request that the inherent growth assumption of 2% per year should not be applied to these roads in the TIA in order to avoid double counting and unrealistic projections.

Table 1

Table 1: Route 659 and Braddock Road - Actual Counted AM + PM Volumes Combined

	Traffic Counts - From TIA's Conducted in the Area (AMPH + PMPH)				
Traffic Study	2004	2007	2008	2009	% Growth Per Year **2004-2009**
Glasscock		3,001			
Dulles South Properties	2,503				
Greenfields Property/Lenah Property			2,377		
LCPS MS-5 Property			2,453		
HS-7				2,487	
Total Summary (Average)	**2,503**	3,001	2,415	**2,487**	**-0.1%**

Table 2

Table 2: Forecast Trends Per Loudoun County Growth Summary

	PROJECTED TREND - DULLES SUBAREA		
	Forecasts		Growth Per Year
	2009	2015	2009-2015
Housing Unit Trend for Dulles Sub-Area	12,871	18,623	6.4%
Employment Trend for Dulles Sub-Area	26,666	35,375	4.8%
Total			**11.2%**

Table 3

Table 3: Background Developments - Annual Growth

Existing **2009**	Background Traffic 2015	Total 2015	Annual Growth 2009-2015
2,487	2,764	5,251	**13.3%**

List of Background Developments:

Within the general Study Area:

1. Westport By-Right Property
2. Stone ridge
3. Marrwood Property
4. CD Smith
5. Kirkpatrick Farms West
6. Kirkpatrick Farms
7. Braddock Corner
8. Greenfields (By-right Density)

9. Greenfield Property
10. Gum Spring Village Center

Outside the general Study Area:

11. Providence Glen
12. LCPS MS
13. Arcola Center

Please see attached Map showing the location of background developments

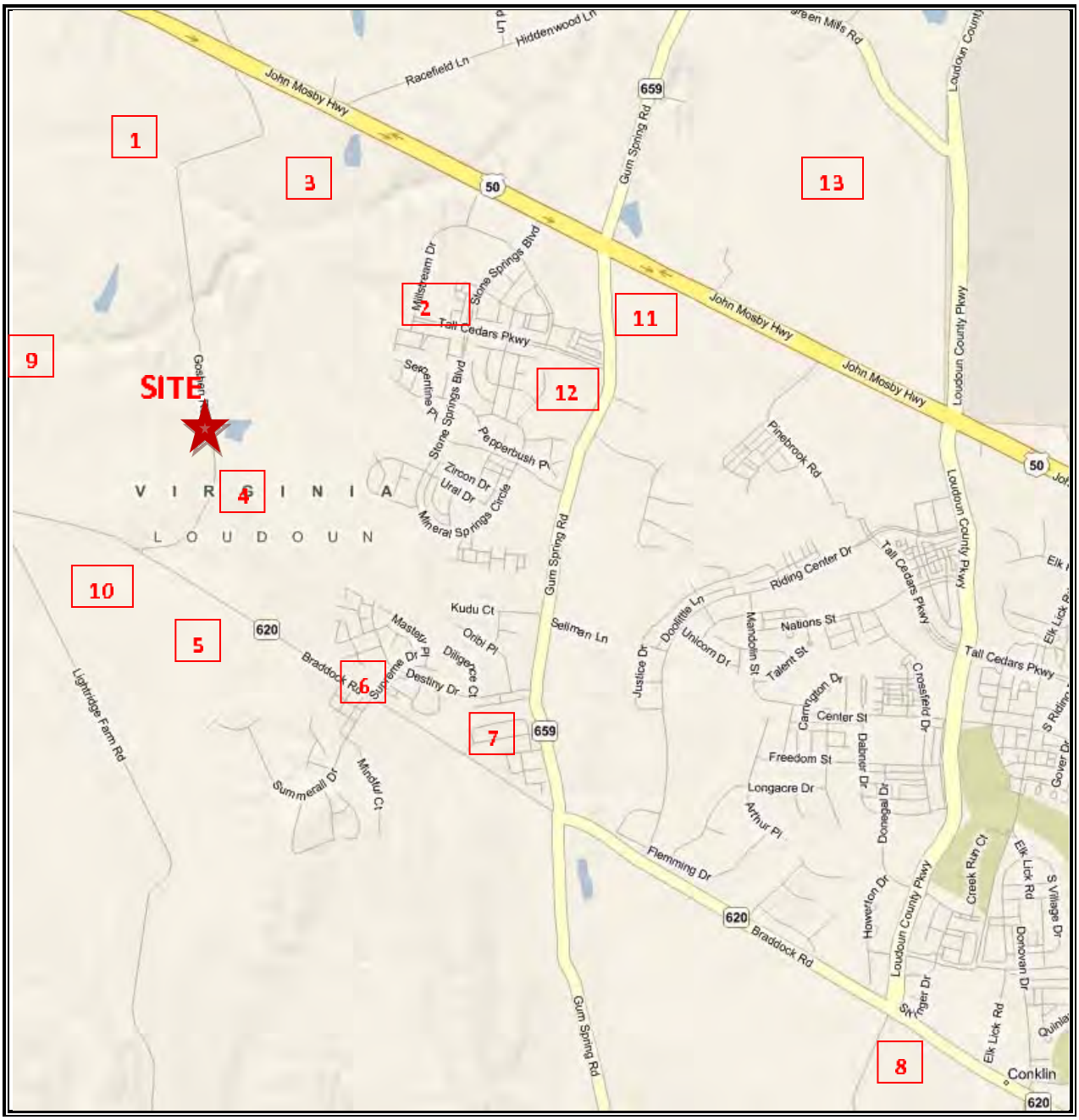

Background Development Location Map

1 Westport By-Right Property
2 Stone Ridge
3 Marrwood Property
4 CD Smith
5 Kirkpatrick Farms West
6 Kirkpatrick Farms
7 Braddock Corner
8 LCPS MS-5
9 Greenfields (By-right Density)
10 Greenfield Property
11 Gum Spring Village Center
12 Providence Glen
13 Arcola Center

APPENDIX G

INTERSECTION CAPACITY ANALYSIS RESULTS – FUTURE CONDITIONS WITHOUT PROPOSED DEVELOPMENT (2012)

Movement	EBL	EBT	EBR	WBL	WBT	WBR	NBL	NBT	NBR	SBL	SBT	SBR
Lane Configurations												
Volume (veh/h)	10	872	11	25	384	12	12	8	38	4	1	0
Sign Control		Free			Free			Stop			Stop	
Grade		0%			0%			0%			0%	
Peak Hour Factor	0.92	0.92	0.92	0.92	0.92	0.92	0.92	0.92	0.92	0.92	0.92	0.92
Hourly flow rate (vph)	11	948	12	27	417	13	13	9	41	4	1	0
Pedestrians												
Lane Width (ft)												
Walking Speed (ft/s)												
Percent Blockage												
Right turn flare (veh)												
Median type		None			None							
Median storage veh)												
Upstream signal (ft)												
pX, platoon unblocked												
vC, conflicting volume	430			960			1233	1454	474	1013	1453	209
vC1, stage 1 conf vol												
vC2, stage 2 conf vol												
vCu, unblocked vol	430			960			1233	1454	474	1013	1453	209
tC, single (s)	4.1			4.1			7.5	6.5	6.9	7.5	6.5	6.9
tC, 2 stage (s)												
tF (s)	2.2			2.2			3.5	4.0	3.3	3.5	4.0	3.3
p0 queue free %	99			96			90	93	92	97	99	100
cM capacity (veh/h)	1125			713			127	123	537	163	123	797

Direction, Lane #	EB 1	EB 2	EB 3	EB 4	WB 1	WB 2	WB 3	WB 4	NB 1	SB 1
Volume Total	11	474	474	12	27	209	209	13	63	5
Volume Left	11	0	0	0	27	0	0	0	13	4
Volume Right	0	0	0	12	0	0	0	13	41	0
cSH	1125	1700	1700	1700	713	1700	1700	1700	252	153
Volume to Capacity	0.01	0.28	0.28	0.01	0.04	0.12	0.12	0.01	0.25	0.04
Queue Length 95th (ft)	1	0	0	0	3	0	0	0	24	3
Control Delay (s)	8.2	0.0	0.0	0.0	10.3	0.0	0.0	0.0	24.0	29.4
Lane LOS	A				B				C	D
Approach Delay (s)	0.1				0.6				24.0	29.4
Approach LOS									C	D

Intersection Summary			
Average Delay		1.4	
Intersection Capacity Utilization		34.1%	ICU Level of Service
Analysis Period (min)		15	

Movement	EBL	EBR	NBL	NBT	SBT	SBR
Lane Configurations						
Volume (veh/h)	30	67	43	312	325	18
Sign Control	Stop			Free	Free	
Grade	0%			0%	0%	
Peak Hour Factor	0.92	0.92	0.92	0.92	0.92	0.92
Hourly flow rate (vph)	33	73	47	339	353	20
Pedestrians						
Lane Width (ft)						
Walking Speed (ft/s)						
Percent Blockage						
Right turn flare (veh)						
Median type				None	None	
Median storage veh)						
Upstream signal (ft)						
pX, platoon unblocked						
vC, conflicting volume	786	353	353			
vC1, stage 1 conf vol						
vC2, stage 2 conf vol						
vCu, unblocked vol	786	353	353			
tC, single (s)	6.4	6.2	4.1			
tC, 2 stage (s)						
tF (s)	3.5	3.3	2.2			
p0 queue free %	91	89	96			
cM capacity (veh/h)	347	690	1205			

Direction, Lane #	EB 1	EB 2	NB 1	SB 1	SB 2
Volume Total	33	73	386	353	20
Volume Left	33	0	47	0	0
Volume Right	0	73	0	0	20
cSH	347	690	1205	1700	1700
Volume to Capacity	0.09	0.11	0.04	0.21	0.01
Queue Length 95th (ft)	8	9	3	0	0
Control Delay (s)	16.4	10.8	1.3	0.0	0.0
Lane LOS	C	B	A		
Approach Delay (s)	12.6		1.3	0.0	
Approach LOS	B				

Intersection Summary			
Average Delay		2.1	
Intersection Capacity Utilization		49.2%	ICU Level of Service
Analysis Period (min)		15	

Movement	EBL	EBT	EBR	WBL	WBT	WBR	NBL	NBT	NBR	SBL	SBT	SBR
Lane Configurations												
Volume (vph)	115	459	38	87	186	206	24	248	112	275	165	52
Ideal Flow (vphpl)	1900	1900	1900	1900	1900	1900	1900	1900	1900	1900	1900	1900
Total Lost time (s)		7.0	7.0		7.0	7.0	7.0	7.0		7.0	7.0	7.0
Lane Util. Factor		1.00	1.00		1.00	1.00	1.00	0.95		1.00	0.95	1.00
Frt		1.00	0.85		1.00	0.85	1.00	0.95		1.00	1.00	0.85
Flt Protected		0.99	1.00		0.98	1.00	0.95	1.00		0.95	1.00	1.00
Satd. Flow (prot)		1844	1583		1833	1583	1770	3374		1770	3539	1583
Flt Permitted		0.99	1.00		0.98	1.00	0.64	1.00		0.27	1.00	1.00
Satd. Flow (perm)		1844	1583		1833	1583	1190	3374		495	3539	1583
Peak-hour factor, PHF	0.92	0.92	0.92	0.92	0.92	0.92	0.92	0.92	0.92	0.92	0.92	0.92
Adj. Flow (vph)	125	499	41	95	202	224	26	270	122	299	179	57
RTOR Reduction (vph)	0	0	7	0	0	156	0	48	0	0	0	26
Lane Group Flow (vph)	0	624	34	0	297	68	26	344	0	299	179	31
Turn Type	Split		pm+ov	Split		pm+ov	pm+pt			pm+pt		pm+ov
Protected Phases	4	4	5	8	8	1	5	2		1	6	4
Permitted Phases			4			8	2			6		6
Actuated Green, G (s)		30.0	33.2		18.0	32.8	20.2	17.0		38.8	28.6	58.6
Effective Green, g (s)		30.0	33.2		18.0	32.8	20.2	17.0		38.8	28.6	58.6
Actuated g/C Ratio		0.28	0.31		0.17	0.30	0.19	0.16		0.36	0.27	0.54
Clearance Time (s)		7.0	7.0		7.0	7.0	7.0	7.0		7.0	7.0	7.0
Vehicle Extension (s)		3.0	3.0		3.0	3.0	3.0	3.0		3.0	3.0	3.0
Lane Grp Cap (vph)		513	488		306	584	240	532		353	939	963
v/s Ratio Prot		c0.34	0.00		c0.16	0.02	0.00	0.10		c0.12	0.05	0.01
v/s Ratio Perm			0.02			0.03	0.02			c0.19		0.01
v/c Ratio		1.22	0.07		0.97	0.12	0.11	0.65		0.85	0.19	0.03
Uniform Delay, d1		38.9	26.4		44.6	27.1	36.1	42.6		27.5	30.6	11.4
Progression Factor		1.00	1.00		1.00	1.00	1.00	1.00		1.00	1.00	1.00
Incremental Delay, d2		114.2	0.1		43.3	0.1	0.2	2.7		16.9	0.1	0.0
Delay (s)		153.1	26.4		87.9	27.1	36.3	45.3		44.4	30.7	11.4
Level of Service		F	C		F	C	D	D		D	C	B
Approach Delay (s)		145.3			61.8			44.7			36.3	
Approach LOS		F			E			D			D	

Intersection Summary			
HCM Average Control Delay	78.0	HCM Level of Service	E
HCM Volume to Capacity ratio	0.97		
Actuated Cycle Length (s)	107.8	Sum of lost time (s)	21.0
Intersection Capacity Utilization	94.1%	ICU Level of Service	F
Analysis Period (min)	15		
c Critical Lane Group			

Movement	EBL	EBT	WBT	WBR	SBL	SBR
Lane Configurations						
Volume (veh/h)	15	228	204	2	0	3
Sign Control		Free	Free		Stop	
Grade		0%	0%		0%	
Peak Hour Factor	0.92	0.92	0.92	0.92	0.92	0.92
Hourly flow rate (vph)	16	248	222	2	0	3
Pedestrians						
Lane Width (ft)						
Walking Speed (ft/s)						
Percent Blockage						
Right turn flare (veh)						
Median type		None	None			
Median storage veh)						
Upstream signal (ft)						
pX, platoon unblocked						
vC, conflicting volume	222				503	223
vC1, stage 1 conf vol						
vC2, stage 2 conf vol						
vCu, unblocked vol	222				503	223
tC, single (s)	4.1				6.4	6.2
tC, 2 stage (s)						
tF (s)	2.2				3.5	3.3
p0 queue free %	99				100	100
cM capacity (veh/h)	1347				522	817

Direction, Lane #	EB 1	WB 1	SB 1
Volume Total	264	224	3
Volume Left	16	0	0
Volume Right	0	2	3
cSH	1347	1700	817
Volume to Capacity	0.01	0.13	0.00
Queue Length 95th (ft)	1	0	0
Control Delay (s)	0.6	0.0	9.4
Lane LOS	A		A
Approach Delay (s)	0.6	0.0	9.4
Approach LOS			A

Intersection Summary			
Average Delay	0.4		
Intersection Capacity Utilization	34.3%	ICU Level of Service	A
Analysis Period (min)	15		

Movement	EBL	EBT	WBT	WBR	SBL	SBR
Lane Configurations						
Volume (veh/h)	25	203	171	18	60	35
Sign Control		Free	Free		Stop	
Grade		0%	0%		0%	
Peak Hour Factor	0.92	0.92	0.92	0.92	0.92	0.92
Hourly flow rate (vph)	27	221	186	20	65	38
Pedestrians						
Lane Width (ft)						
Walking Speed (ft/s)						
Percent Blockage						
Right turn flare (veh)						
Median type		None	None			
Median storage veh)						
Upstream signal (ft)						
pX, platoon unblocked						
vC, conflicting volume	205				471	196
vC1, stage 1 conf vol						
vC2, stage 2 conf vol						
vCu, unblocked vol	205				471	196
tC, single (s)	4.1				6.4	6.2
tC, 2 stage (s)						
tF (s)	2.2				3.5	3.3
p0 queue free %	98				88	96
cM capacity (veh/h)	1366				541	846

Direction, Lane #	EB 1	WB 1	SB 1
Volume Total	248	205	103
Volume Left	27	0	65
Volume Right	0	20	38
cSH	1366	1700	623
Volume to Capacity	0.02	0.12	0.17
Queue Length 95th (ft)	2	0	15
Control Delay (s)	1.0	0.0	11.9
Lane LOS	A		B
Approach Delay (s)	1.0	0.0	11.9
Approach LOS			B

Intersection Summary			
Average Delay		2.7	
Intersection Capacity Utilization		37.6%	ICU Level of Service A
Analysis Period (min)		15	

Movement	EBL	EBT	EBR	WBL	WBT	WBR	NBL	NBT	NBR	SBL	SBT	SBR
Lane Configurations												
Volume (veh/h)	1	325	12	29	1129	4	5	1	22	1	7	4
Sign Control		Free			Free			Stop			Stop	
Grade		0%			0%			0%			0%	
Peak Hour Factor	0.92	0.92	0.92	0.92	0.92	0.92	0.92	0.92	0.92	0.92	0.92	0.92
Hourly flow rate (vph)	1	353	13	32	1227	4	5	1	24	1	8	4
Pedestrians												
Lane Width (ft)												
Walking Speed (ft/s)												
Percent Blockage												
Right turn flare (veh)												
Median type		None			None							
Median storage veh)												
Upstream signal (ft)												
pX, platoon unblocked												
vC, conflicting volume	1232			366			1040	1650	177	1493	1659	614
vC1, stage 1 conf vol												
vC2, stage 2 conf vol												
vCu, unblocked vol	1232			366			1040	1650	177	1493	1659	614
tC, single (s)	4.1			4.1			7.5	6.5	6.9	7.5	6.5	6.9
tC, 2 stage (s)												
tF (s)	2.2			2.2			3.5	4.0	3.3	3.5	4.0	3.3
p0 queue free %	100			97			97	99	97	99	92	99
cM capacity (veh/h)	562			1189			168	95	836	80	94	435

Direction, Lane #	EB 1	EB 2	EB 3	EB 4	WB 1	WB 2	WB 3	WB 4	NB 1	SB 1
Volume Total	1	177	177	13	32	614	614	4	30	13
Volume Left	1	0	0	0	32	0	0	0	5	1
Volume Right	0	0	0	13	0	0	0	4	24	4
cSH	562	1700	1700	1700	1189	1700	1700	1700	420	125
Volume to Capacity	0.00	0.10	0.10	0.01	0.03	0.36	0.36	0.00	0.07	0.10
Queue Length 95th (ft)	0	0	0	0	2	0	0	0	6	9
Control Delay (s)	11.4	0.0	0.0	0.0	8.1	0.0	0.0	0.0	14.2	37.2
Lane LOS	B				A				B	E
Approach Delay (s)	0.0				0.2				14.2	37.2
Approach LOS									B	E

Intersection Summary				
Average Delay		0.7		
Intersection Capacity Utilization		41.2%	ICU Level of Service	A
Analysis Period (min)		15		

Movement	EBL	EBR	NBL	NBT	SBT	SBR
Lane Configurations						
Volume (veh/h)	19	68	58	177	616	53
Sign Control	Stop			Free	Free	
Grade	0%			0%	0%	
Peak Hour Factor	0.92	0.92	0.92	0.92	0.92	0.92
Hourly flow rate (vph)	21	74	63	192	670	58
Pedestrians						
Lane Width (ft)						
Walking Speed (ft/s)						
Percent Blockage						
Right turn flare (veh)						
Median type				None	None	
Median storage veh)						
Upstream signal (ft)						
pX, platoon unblocked						
vC, conflicting volume	988	670	670			
vC1, stage 1 conf vol						
vC2, stage 2 conf vol						
vCu, unblocked vol	988	670	670			
tC, single (s)	6.4	6.2	4.1			
tC, 2 stage (s)						
tF (s)	3.5	3.3	2.2			
p0 queue free %	92	84	93			
cM capacity (veh/h)	255	457	921			

Direction, Lane #	EB 1	EB 2	NB 1	SB 1	SB 2
Volume Total	21	74	255	670	58
Volume Left	21	0	63	0	0
Volume Right	0	74	0	0	58
cSH	255	457	921	1700	1700
Volume to Capacity	0.08	0.16	0.07	0.39	0.03
Queue Length 95th (ft)	7	14	6	0	0
Control Delay (s)	20.3	14.4	2.8	0.0	0.0
Lane LOS	C	B	A		
Approach Delay (s)	15.7		2.8	0.0	
Approach LOS	C				

Intersection Summary				
Average Delay		2.0		
Intersection Capacity Utilization		58.3%	ICU Level of Service	B
Analysis Period (min)		15		

Movement	EBL	EBT	EBR	WBL	WBT	WBR	NBL	NBT	NBR	SBL	SBT	SBR
Lane Configurations												
Volume (vph)	96	128	42	136	187	109	32	149	62	77	286	68
Ideal Flow (vphpl)	1900	1900	1900	1900	1900	1900	1900	1900	1900	1900	1900	1900
Total Lost time (s)		7.0	7.0		7.0	7.0	7.0	7.0		7.0	7.0	7.0
Lane Util. Factor		1.00	1.00		1.00	1.00	1.00	0.95		1.00	0.95	1.00
Frt		1.00	0.85		1.00	0.85	1.00	0.96		1.00	1.00	0.85
Flt Protected		0.98	1.00		0.98	1.00	0.95	1.00		0.95	1.00	1.00
Satd. Flow (prot)		1824	1583		1824	1583	1770	3384		1770	3539	1583
Flt Permitted		0.98	1.00		0.98	1.00	0.56	1.00		0.52	1.00	1.00
Satd. Flow (perm)		1824	1583		1824	1583	1048	3384		972	3539	1583
Peak-hour factor, PHF	0.92	0.92	0.92	0.92	0.92	0.92	0.92	0.92	0.92	0.92	0.92	0.92
Adj. Flow (vph)	104	139	46	148	203	118	35	162	67	84	311	74
RTOR Reduction (vph)	0	0	20	0	0	79	0	43	0	0	0	46
Lane Group Flow (vph)	0	243	26	0	351	39	35	186	0	84	311	28
Turn Type	Split		pm+ov	Split		pm+ov	pm+pt			pm+pt		pm+ov
Protected Phases	4	4	5	8	8	1	5	2		1	6	4
Permitted Phases			4			8	2			6		6
Actuated Green, G (s)		16.4	21.0		21.9	28.8	18.4	13.8		23.0	16.1	32.5
Effective Green, g (s)		16.4	21.0		21.9	28.8	18.4	13.8		23.0	16.1	32.5
Actuated g/C Ratio		0.19	0.24		0.25	0.33	0.21	0.16		0.26	0.19	0.37
Clearance Time (s)		7.0	7.0		7.0	7.0	7.0	7.0		7.0	7.0	7.0
Vehicle Extension (s)		3.0	3.0		3.0	3.0	3.0	3.0		3.0	3.0	3.0
Lane Grp Cap (vph)		344	382		459	651	260	537		320	655	719
v/s Ratio Prot		c0.13	0.00		c0.19	0.00	0.01	0.05		c0.02	c0.09	0.01
v/s Ratio Perm			0.01			0.02	0.02			0.05		0.01
v/c Ratio		0.71	0.07		0.76	0.06	0.13	0.35		0.26	0.47	0.04
Uniform Delay, d1		33.0	25.4		30.2	19.9	27.6	32.6		24.7	31.7	17.3
Progression Factor		1.00	1.00		1.00	1.00	1.00	1.00		1.00	1.00	1.00
Incremental Delay, d2		6.5	0.1		7.4	0.0	0.2	0.4		0.4	0.5	0.0
Delay (s)		39.5	25.5		37.6	19.9	27.8	33.0		25.2	32.2	17.3
Level of Service		D	C		D	B	C	C		C	C	B
Approach Delay (s)		37.3			33.1			32.3			28.6	
Approach LOS		D			C			C			C	

Intersection Summary			
HCM Average Control Delay	32.4	HCM Level of Service	C
HCM Volume to Capacity ratio	0.57		
Actuated Cycle Length (s)	87.0	Sum of lost time (s)	21.0
Intersection Capacity Utilization	64.0%	ICU Level of Service	B
Analysis Period (min)	15		
c Critical Lane Group			

Movement	EBL	EBT	WBT	WBR	SBL	SBR
Lane Configurations						
Volume (veh/h)	15	116	131	2	0	3
Sign Control		Free	Free		Stop	
Grade		0%	0%		0%	
Peak Hour Factor	0.92	0.92	0.92	0.92	0.92	0.92
Hourly flow rate (vph)	16	126	142	2	0	3
Pedestrians						
Lane Width (ft)						
Walking Speed (ft/s)						
Percent Blockage						
Right turn flare (veh)						
Median type		None	None			
Median storage veh)						
Upstream signal (ft)						
pX, platoon unblocked						
vC, conflicting volume	142				302	143
vC1, stage 1 conf vol						
vC2, stage 2 conf vol						
vCu, unblocked vol	142				302	143
tC, single (s)	4.1				6.4	6.2
tC, 2 stage (s)						
tF (s)	2.2				3.5	3.3
p0 queue free %	99				100	100
cM capacity (veh/h)	1440				682	904

Direction, Lane #	EB 1	WB 1	SB 1
Volume Total	142	145	3
Volume Left	16	0	0
Volume Right	0	2	3
cSH	1440	1700	904
Volume to Capacity	0.01	0.09	0.00
Queue Length 95th (ft)	1	0	0
Control Delay (s)	0.9	0.0	9.0
Lane LOS	A		A
Approach Delay (s)	0.9	0.0	9.0
Approach LOS			A

Intersection Summary			
Average Delay	0.6		
Intersection Capacity Utilization	27.3%	ICU Level of Service	A
Analysis Period (min)	15		

Movement	EBL	EBT	WBT	WBR	SBL	SBR
Lane Configurations						
Volume (veh/h)	33	83	106	55	29	27
Sign Control		Free	Free		Stop	
Grade		0%	0%		0%	
Peak Hour Factor	0.92	0.92	0.92	0.92	0.92	0.92
Hourly flow rate (vph)	36	90	115	60	32	29
Pedestrians						
Lane Width (ft)						
Walking Speed (ft/s)						
Percent Blockage						
Right turn flare (veh)						
Median type		None	None			
Median storage veh)						
Upstream signal (ft)						
pX, platoon unblocked						
vC, conflicting volume	175				307	145
vC1, stage 1 conf vol						
vC2, stage 2 conf vol						
vCu, unblocked vol	175				307	145
tC, single (s)	4.1				6.4	6.2
tC, 2 stage (s)						
tF (s)	2.2				3.5	3.3
p0 queue free %	97				95	97
cM capacity (veh/h)	1401				668	902

Direction, Lane #	EB 1	WB 1	SB 1
Volume Total	126	175	61
Volume Left	36	0	32
Volume Right	0	60	29
cSH	1401	1700	763
Volume to Capacity	0.03	0.10	0.08
Queue Length 95th (ft)	2	0	6
Control Delay (s)	2.3	0.0	10.1
Lane LOS	A		B
Approach Delay (s)	2.3	0.0	10.1
Approach LOS			B

Intersection Summary			
Average Delay		2.5	
Intersection Capacity Utilization		28.5%	ICU Level of Service A
Analysis Period (min)		15	

Movement	EBL	EBT	EBR	WBL	WBT	WBR	NBL	NBT	NBR	SBL	SBT	SBR
Lane Configurations												
Volume (veh/h)	10	872	11	25	384	12	12	8	38	4	1	0
Sign Control		Free			Free			Stop			Stop	
Grade		0%			0%			0%			0%	
Peak Hour Factor	0.92	0.92	0.92	0.92	0.92	0.92	0.92	0.92	0.92	0.92	0.92	0.92
Hourly flow rate (vph)	11	948	12	27	417	13	13	9	41	4	1	0
Pedestrians												
Lane Width (ft)												
Walking Speed (ft/s)												
Percent Blockage												
Right turn flare (veh)												
Median type		None			None							
Median storage veh)												
Upstream signal (ft)												
pX, platoon unblocked												
vC, conflicting volume	430			960			1233	1454	474	1013	1453	209
vC1, stage 1 conf vol												
vC2, stage 2 conf vol												
vCu, unblocked vol	430			960			1233	1454	474	1013	1453	209
tC, single (s)	4.1			4.1			7.5	6.5	6.9	7.5	6.5	6.9
tC, 2 stage (s)												
tF (s)	2.2			2.2			3.5	4.0	3.3	3.5	4.0	3.3
p0 queue free %	99			96			90	93	92	97	99	100
cM capacity (veh/h)	1125			713			127	123	537	163	123	797

Direction, Lane #	EB 1	EB 2	EB 3	EB 4	WB 1	WB 2	WB 3	WB 4	NB 1	SB 1
Volume Total	11	474	474	12	27	209	209	13	63	5
Volume Left	11	0	0	0	27	0	0	0	13	4
Volume Right	0	0	0	12	0	0	0	13	41	0
cSH	1125	1700	1700	1700	713	1700	1700	1700	252	153
Volume to Capacity	0.01	0.28	0.28	0.01	0.04	0.12	0.12	0.01	0.25	0.04
Queue Length 95th (ft)	1	0	0	0	3	0	0	0	24	3
Control Delay (s)	8.2	0.0	0.0	0.0	10.3	0.0	0.0	0.0	24.0	29.4
Lane LOS	A				B				C	D
Approach Delay (s)	0.1				0.6				24.0	29.4
Approach LOS									C	D

Intersection Summary				
Average Delay		1.4		
Intersection Capacity Utilization		34.1%	ICU Level of Service	A
Analysis Period (min)		15		

Movement	EBL	EBR	NBL	NBT	SBT	SBR
Lane Configurations						
Volume (veh/h)	30	67	43	312	325	18
Sign Control	Stop			Free	Free	
Grade	0%			0%	0%	
Peak Hour Factor	0.92	0.92	0.92	0.92	0.92	0.92
Hourly flow rate (vph)	33	73	47	339	353	20
Pedestrians						
Lane Width (ft)						
Walking Speed (ft/s)						
Percent Blockage						
Right turn flare (veh)						
Median type				None	None	
Median storage veh)						
Upstream signal (ft)						
pX, platoon unblocked						
vC, conflicting volume	786	353	353			
vC1, stage 1 conf vol						
vC2, stage 2 conf vol						
vCu, unblocked vol	786	353	353			
tC, single (s)	6.4	6.2	4.1			
tC, 2 stage (s)						
tF (s)	3.5	3.3	2.2			
p0 queue free %	91	89	96			
cM capacity (veh/h)	347	690	1205			

Direction, Lane #	EB 1	EB 2	NB 1	SB 1	SB 2
Volume Total	33	73	386	353	20
Volume Left	33	0	47	0	0
Volume Right	0	73	0	0	20
cSH	347	690	1205	1700	1700
Volume to Capacity	0.09	0.11	0.04	0.21	0.01
Queue Length 95th (ft)	8	9	3	0	0
Control Delay (s)	16.4	10.8	1.3	0.0	0.0
Lane LOS	C	B	A		
Approach Delay (s)	12.6		1.3	0.0	
Approach LOS	B				

Intersection Summary				
Average Delay		2.1		
Intersection Capacity Utilization		49.2%	ICU Level of Service	A
Analysis Period (min)		15		

Movement	EBL	EBT	EBR	WBL	WBT	WBR	NBL	NBT	NBR	SBL	SBT	SBR
Lane Configurations												
Volume (vph)	115	459	38	87	186	206	24	248	112	275	165	52
Ideal Flow (vphpl)	1900	1900	1900	1900	1900	1900	1900	1900	1900	1900	1900	1900
Total Lost time (s)	7.0	7.0	7.0	7.0	7.0	7.0	7.0	7.0		7.0	7.0	7.0
Lane Util. Factor	1.00	1.00	1.00	1.00	1.00	1.00	1.00	0.95		1.00	0.95	1.00
Frt	1.00	1.00	0.85	1.00	1.00	0.85	1.00	0.95		1.00	1.00	0.85
Flt Protected	0.95	1.00	1.00	0.95	1.00	1.00	0.95	1.00		0.95	1.00	1.00
Satd. Flow (prot)	1770	1863	1583	1770	1863	1583	1770	3374		1770	3539	1583
Flt Permitted	0.56	1.00	1.00	0.23	1.00	1.00	0.64	1.00		0.30	1.00	1.00
Satd. Flow (perm)	1044	1863	1583	426	1863	1583	1190	3374		560	3539	1583
Peak-hour factor, PHF	0.92	0.92	0.92	0.92	0.92	0.92	0.92	0.92	0.92	0.92	0.92	0.92
Adj. Flow (vph)	125	499	41	95	202	224	26	270	122	299	179	57
RTOR Reduction (vph)	0	0	26	0	0	117	0	47	0	0	0	36
Lane Group Flow (vph)	125	499	15	95	202	107	26	345	0	299	179	21
Turn Type	pm+pt		pm+ov	pm+pt		pm+ov	pm+pt			pm+pt		pm+ov
Protected Phases	7	4	5	3	8	1	5	2		1	6	7
Permitted Phases	4		4	8		8	2			6		6
Actuated Green, G (s)	35.9	30.7	33.7	31.5	28.5	43.8	19.6	16.6		38.9	28.9	34.1
Effective Green, g (s)	35.9	30.7	33.7	31.5	28.5	43.8	19.6	16.6		38.9	28.9	34.1
Actuated g/C Ratio	0.38	0.33	0.36	0.34	0.30	0.47	0.21	0.18		0.42	0.31	0.36
Clearance Time (s)	7.0	7.0	7.0	7.0	7.0	7.0	7.0	7.0		7.0	7.0	7.0
Vehicle Extension (s)	3.0	3.0	3.0	3.0	3.0	3.0	3.0	3.0		3.0	3.0	3.0
Lane Grp Cap (vph)	441	611	688	186	567	859	268	598		431	1093	695
v/s Ratio Prot	0.02	c0.27	0.00	c0.02	0.11	0.02	0.00	0.10		c0.11	0.05	0.00
v/s Ratio Perm	0.09		0.01	0.15		0.05	0.02			c0.18		0.01
v/c Ratio	0.28	0.82	0.02	0.51	0.36	0.12	0.10	0.58		0.69	0.16	0.03
Uniform Delay, d1	19.2	28.9	19.3	24.8	25.4	14.1	29.7	35.3		20.0	23.6	19.1
Progression Factor	1.00	1.00	1.00	1.00	1.00	1.00	1.00	1.00		1.00	1.00	1.00
Incremental Delay, d2	0.4	8.3	0.0	2.4	0.4	0.1	0.2	1.4		4.8	0.1	0.0
Delay (s)	19.6	37.2	19.3	27.1	25.8	14.1	29.8	36.6		24.8	23.6	19.1
Level of Service	B	D	B	C	C	B	C	D		C	C	B
Approach Delay (s)		32.8			21.0			36.2			23.8	
Approach LOS		C			C			D			C	

Intersection Summary				
HCM Average Control Delay	28.3	HCM Level of Service	C	
HCM Volume to Capacity ratio	0.65			
Actuated Cycle Length (s)	93.6	Sum of lost time (s)	14.0	
Intersection Capacity Utilization	78.0%	ICU Level of Service	D	
Analysis Period (min)	15			
c Critical Lane Group				

Movement	EBL	EBT	WBT	WBR	SBL	SBR
Lane Configurations						
Volume (veh/h)	15	228	204	2	0	3
Sign Control		Free	Free		Stop	
Grade		0%	0%		0%	
Peak Hour Factor	0.92	0.92	0.92	0.92	0.92	0.92
Hourly flow rate (vph)	16	248	222	2	0	3
Pedestrians						
Lane Width (ft)						
Walking Speed (ft/s)						
Percent Blockage						
Right turn flare (veh)						
Median type		None	None			
Median storage veh)						
Upstream signal (ft)						
pX, platoon unblocked						
vC, conflicting volume	222				503	223
vC1, stage 1 conf vol						
vC2, stage 2 conf vol						
vCu, unblocked vol	222				503	223
tC, single (s)	4.1				6.4	6.2
tC, 2 stage (s)						
tF (s)	2.2				3.5	3.3
p0 queue free %	99				100	100
cM capacity (veh/h)	1347				522	817

Direction, Lane #	EB 1	WB 1	SB 1
Volume Total	264	224	3
Volume Left	16	0	0
Volume Right	0	2	3
cSH	1347	1700	817
Volume to Capacity	0.01	0.13	0.00
Queue Length 95th (ft)	1	0	0
Control Delay (s)	0.6	0.0	9.4
Lane LOS	A		A
Approach Delay (s)	0.6	0.0	9.4
Approach LOS			A

Intersection Summary			
Average Delay	0.4		
Intersection Capacity Utilization	34.3%	ICU Level of Service	A
Analysis Period (min)	15		

Movement	EBL	EBT	WBT	WBR	SBL	SBR
Lane Configurations						
Volume (veh/h)	25	203	171	18	60	35
Sign Control		Free	Free		Stop	
Grade		0%	0%		0%	
Peak Hour Factor	0.92	0.92	0.92	0.92	0.92	0.92
Hourly flow rate (vph)	27	221	186	20	65	38
Pedestrians						
Lane Width (ft)						
Walking Speed (ft/s)						
Percent Blockage						
Right turn flare (veh)						
Median type		None	None			
Median storage veh)						
Upstream signal (ft)						
pX, platoon unblocked						
vC, conflicting volume	205				471	196
vC1, stage 1 conf vol						
vC2, stage 2 conf vol						
vCu, unblocked vol	205				471	196
tC, single (s)	4.1				6.4	6.2
tC, 2 stage (s)						
tF (s)	2.2				3.5	3.3
p0 queue free %	98				88	96
cM capacity (veh/h)	1366				541	846

Direction, Lane #	EB 1	WB 1	SB 1
Volume Total	248	205	103
Volume Left	27	0	65
Volume Right	0	20	38
cSH	1366	1700	623
Volume to Capacity	0.02	0.12	0.17
Queue Length 95th (ft)	2	0	15
Control Delay (s)	1.0	0.0	11.9
Lane LOS	A		B
Approach Delay (s)	1.0	0.0	11.9
Approach LOS			B

Intersection Summary			
Average Delay		2.7	
Intersection Capacity Utilization		37.6%	ICU Level of Service A
Analysis Period (min)		15	

Movement	EBL	EBT	EBR	WBL	WBT	WBR	NBL	NBT	NBR	SBL	SBT	SBR
Lane Configurations												
Volume (veh/h)	1	325	12	29	1129	4	5	1	22	1	7	4
Sign Control		Free			Free			Stop			Stop	
Grade		0%			0%			0%			0%	
Peak Hour Factor	0.92	0.92	0.92	0.92	0.92	0.92	0.92	0.92	0.92	0.92	0.92	0.92
Hourly flow rate (vph)	1	353	13	32	1227	4	5	1	24	1	8	4
Pedestrians												
Lane Width (ft)												
Walking Speed (ft/s)												
Percent Blockage												
Right turn flare (veh)												
Median type		None			None							
Median storage veh)												
Upstream signal (ft)												
pX, platoon unblocked												
vC, conflicting volume	1232			366			1040	1650	177	1493	1659	614
vC1, stage 1 conf vol												
vC2, stage 2 conf vol												
vCu, unblocked vol	1232			366			1040	1650	177	1493	1659	614
tC, single (s)	4.1			4.1			7.5	6.5	6.9	7.5	6.5	6.9
tC, 2 stage (s)												
tF (s)	2.2			2.2			3.5	4.0	3.3	3.5	4.0	3.3
p0 queue free %	100			97			97	99	97	99	92	99
cM capacity (veh/h)	562			1189			168	95	836	80	94	435

Direction, Lane #	EB 1	EB 2	EB 3	EB 4	WB 1	WB 2	WB 3	WB 4	NB 1	SB 1
Volume Total	1	177	177	13	32	614	614	4	30	13
Volume Left	1	0	0	0	32	0	0	0	5	1
Volume Right	0	0	0	13	0	0	0	4	24	4
cSH	562	1700	1700	1700	1189	1700	1700	1700	420	125
Volume to Capacity	0.00	0.10	0.10	0.01	0.03	0.36	0.36	0.00	0.07	0.10
Queue Length 95th (ft)	0	0	0	0	2	0	0	0	6	9
Control Delay (s)	11.4	0.0	0.0	0.0	8.1	0.0	0.0	0.0	14.2	37.2
Lane LOS	B				A				B	E
Approach Delay (s)	0.0				0.2				14.2	37.2
Approach LOS									B	E

Intersection Summary				
Average Delay		0.7		
Intersection Capacity Utilization		41.2%	ICU Level of Service	A
Analysis Period (min)		15		

Movement	EBL	EBR	NBL	NBT	SBT	SBR
Lane Configurations						
Volume (veh/h)	19	68	58	177	616	53
Sign Control	Stop			Free	Free	
Grade	0%			0%	0%	
Peak Hour Factor	0.92	0.92	0.92	0.92	0.92	0.92
Hourly flow rate (vph)	21	74	63	192	670	58
Pedestrians						
Lane Width (ft)						
Walking Speed (ft/s)						
Percent Blockage						
Right turn flare (veh)						
Median type				None	None	
Median storage veh)						
Upstream signal (ft)						
pX, platoon unblocked						
vC, conflicting volume	988	670	670			
vC1, stage 1 conf vol						
vC2, stage 2 conf vol						
vCu, unblocked vol	988	670	670			
tC, single (s)	6.4	6.2	4.1			
tC, 2 stage (s)						
tF (s)	3.5	3.3	2.2			
p0 queue free %	92	84	93			
cM capacity (veh/h)	255	457	921			

Direction, Lane #	EB 1	EB 2	NB 1	SB 1	SB 2
Volume Total	21	74	255	670	58
Volume Left	21	0	63	0	0
Volume Right	0	74	0	0	58
cSH	255	457	921	1700	1700
Volume to Capacity	0.08	0.16	0.07	0.39	0.03
Queue Length 95th (ft)	7	14	6	0	0
Control Delay (s)	20.3	14.4	2.8	0.0	0.0
Lane LOS	C	B	A		
Approach Delay (s)	15.7		2.8	0.0	
Approach LOS	C				

Intersection Summary				
Average Delay		2.0		
Intersection Capacity Utilization		58.3%	ICU Level of Service	B
Analysis Period (min)		15		

Movement	EBL	EBT	EBR	WBL	WBT	WBR	NBL	NBT	NBR	SBL	SBT	SBR
Lane Configurations												
Volume (vph)	96	128	42	136	187	109	32	149	62	77	286	68
Ideal Flow (vphpl)	1900	1900	1900	1900	1900	1900	1900	1900	1900	1900	1900	1900
Total Lost time (s)	7.0	7.0	7.0	7.0	7.0	7.0	7.0	7.0		7.0	7.0	7.0
Lane Util. Factor	1.00	1.00	1.00	1.00	1.00	1.00	1.00	0.95		1.00	0.95	1.00
Frt	1.00	1.00	0.85	1.00	1.00	0.85	1.00	0.96		1.00	1.00	0.85
Flt Protected	0.95	1.00	1.00	0.95	1.00	1.00	0.95	1.00		0.95	1.00	1.00
Satd. Flow (prot)	1770	1863	1583	1770	1863	1583	1770	3384		1770	3539	1583
Flt Permitted	0.63	1.00	1.00	0.57	1.00	1.00	0.56	1.00		0.44	1.00	1.00
Satd. Flow (perm)	1174	1863	1583	1068	1863	1583	1048	3384		822	3539	1583
Peak-hour factor, PHF	0.92	0.92	0.92	0.92	0.92	0.92	0.92	0.92	0.92	0.92	0.92	0.92
Adj. Flow (vph)	104	139	46	148	203	118	35	162	67	84	311	74
RTOR Reduction (vph)	0	0	35	0	0	79	0	43	0	0	0	51
Lane Group Flow (vph)	104	139	11	148	203	39	35	186	0	84	311	23
Turn Type	pm+pt		pm+ov	pm+pt		pm+ov	pm+pt			pm+pt		pm+ov
Protected Phases	7	4	5	3	8	1	5	2		1	6	7
Permitted Phases	4		4	8		8	2			6		6
Actuated Green, G (s)	20.0	13.3	16.4	24.4	15.5	22.7	13.9	10.8		22.1	14.9	21.6
Effective Green, g (s)	20.0	13.3	16.4	24.4	15.5	22.7	13.9	10.8		22.1	14.9	21.6
Actuated g/C Ratio	0.29	0.20	0.24	0.36	0.23	0.33	0.20	0.16		0.32	0.22	0.32
Clearance Time (s)	7.0	7.0	7.0	7.0	7.0	7.0	7.0	7.0		7.0	7.0	7.0
Vehicle Extension (s)	3.0	3.0	3.0	3.0	3.0	3.0	3.0	3.0		3.0	3.0	3.0
Lane Grp Cap (vph)	403	363	543	474	423	689	246	536		366	773	664
v/s Ratio Prot	0.03	0.07	0.00	c0.04	c0.11	0.01	0.01	0.05		c0.02	c0.09	0.00
v/s Ratio Perm	0.05		0.01	0.07		0.02	0.02			0.05		0.01
v/c Ratio	0.26	0.38	0.02	0.31	0.48	0.06	0.14	0.35		0.23	0.40	0.04
Uniform Delay, d1	18.1	23.9	19.8	15.4	22.9	15.5	22.1	25.6		16.5	22.8	16.1
Progression Factor	1.00	1.00	1.00	1.00	1.00	1.00	1.00	1.00		1.00	1.00	1.00
Incremental Delay, d2	0.3	0.7	0.0	0.4	0.9	0.0	0.3	0.4		0.3	0.3	0.0
Delay (s)	18.4	24.6	19.8	15.8	23.7	15.5	22.3	26.0		16.8	23.2	16.1
Level of Service	B	C	B	B	C	B	C	C		B	C	B
Approach Delay (s)		21.6			19.1			25.5			20.9	
Approach LOS		C			B			C			C	

Intersection Summary				
HCM Average Control Delay	21.3	HCM Level of Service	C	
HCM Volume to Capacity ratio	0.38			
Actuated Cycle Length (s)	68.2	Sum of lost time (s)	21.0	
Intersection Capacity Utilization	49.7%	ICU Level of Service	A	
Analysis Period (min)	15			
c Critical Lane Group				

Movement	EBL	EBT	WBT	WBR	SBL	SBR
Lane Configurations						
Volume (veh/h)	15	116	131	2	0	3
Sign Control		Free	Free		Stop	
Grade		0%	0%		0%	
Peak Hour Factor	0.92	0.92	0.92	0.92	0.92	0.92
Hourly flow rate (vph)	16	126	142	2	0	3
Pedestrians						
Lane Width (ft)						
Walking Speed (ft/s)						
Percent Blockage						
Right turn flare (veh)						
Median type		None	None			
Median storage veh)						
Upstream signal (ft)						
pX, platoon unblocked						
vC, conflicting volume	142				302	143
vC1, stage 1 conf vol						
vC2, stage 2 conf vol						
vCu, unblocked vol	142				302	143
tC, single (s)	4.1				6.4	6.2
tC, 2 stage (s)						
tF (s)	2.2				3.5	3.3
p0 queue free %	99				100	100
cM capacity (veh/h)	1440				682	904

Direction, Lane #	EB 1	WB 1	SB 1
Volume Total	142	145	3
Volume Left	16	0	0
Volume Right	0	2	3
cSH	1440	1700	904
Volume to Capacity	0.01	0.09	0.00
Queue Length 95th (ft)	1	0	0
Control Delay (s)	0.9	0.0	9.0
Lane LOS	A		A
Approach Delay (s)	0.9	0.0	9.0
Approach LOS			A

Intersection Summary			
Average Delay	0.6		
Intersection Capacity Utilization	27.3%	ICU Level of Service	A
Analysis Period (min)	15		

Movement	EBL	EBT	WBT	WBR	SBL	SBR
Lane Configurations						
Volume (veh/h)	33	83	106	55	29	27
Sign Control		Free	Free		Stop	
Grade		0%	0%		0%	
Peak Hour Factor	0.92	0.92	0.92	0.92	0.92	0.92
Hourly flow rate (vph)	36	90	115	60	32	29
Pedestrians						
Lane Width (ft)						
Walking Speed (ft/s)						
Percent Blockage						
Right turn flare (veh)						
Median type		None	None			
Median storage veh)						
Upstream signal (ft)						
pX, platoon unblocked						
vC, conflicting volume	175				307	145
vC1, stage 1 conf vol						
vC2, stage 2 conf vol						
vCu, unblocked vol	175				307	145
tC, single (s)	4.1				6.4	6.2
tC, 2 stage (s)						
tF (s)	2.2				3.5	3.3
p0 queue free %	97				95	97
cM capacity (veh/h)	1401				668	902

Direction, Lane #	EB 1	WB 1	SB 1
Volume Total	126	175	61
Volume Left	36	0	32
Volume Right	0	60	29
cSH	1401	1700	763
Volume to Capacity	0.03	0.10	0.08
Queue Length 95th (ft)	2	0	6
Control Delay (s)	2.3	0.0	10.1
Lane LOS	A		B
Approach Delay (s)	2.3	0.0	10.1
Approach LOS			B

Intersection Summary			
Average Delay		2.5	
Intersection Capacity Utilization		28.5%	ICU Level of Service A
Analysis Period (min)		15	

APPENDIX H

DIRECTION OF APPROACH PROJECTION ESTIMATES AND CALCULATIONS

TRANSPORTATION STUDY AREA (PURE FEED)
MS-5 / HS-7 AND MERCER MS / FREEDOM HS

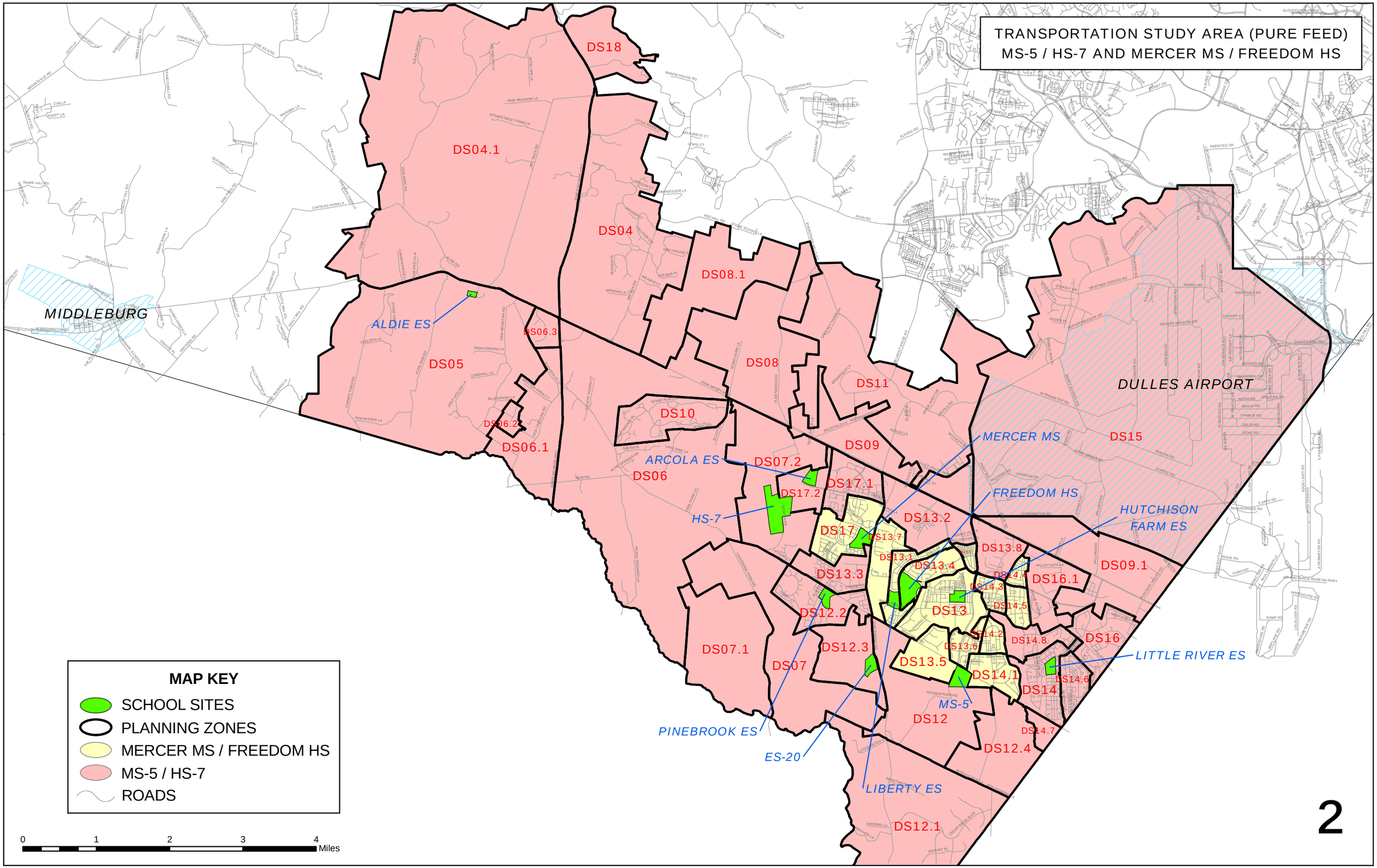

Prepared by LCPS Department of Planning and Legislative Services November 2009

HIGH SCHOOL DOA ESTIMATION FOR 2012-2013 (PURE FEED)

		Direction of Approach for each Zone														Traffic Generated from Each Zone														
DS Zones	Students	NB Stone Springs then WB TC Pkwy	SB Stone Springs then WB TC Pkwy	SB Route 15	NB Gum Spring Rd (South of Braddock)	SB Rel Rt. 659	EB Route 50 then SB Rt 15	EB Route 50	WB Route 50	EB Braddock	WB Braddock (West of Gum Spring)	WB Braddock (east of Gum Spring)	SB Fleetwood/ Goshen	NB Lightridge Farm	EB Destiny Dr then SB Gum Spring	NB Stone Springs then WB TC Pkwy	SB Stone Springs then WB TC Pkwy	SB Route 15	NB Gum Spring Rd (South of Braddock)	SB Rel Rt. 659	EB Route 50 then SB Rt 15	EB Route 50	WB Route 50	EB Braddock	WB Braddock (West of Gum Spring)	WB Braddock (east of Gum Spring)	SB Fleetwood/ Goshen	NB Lightridge Farm	EB Destiny Dr then SB Gum Spring	TOTAL
DS04	20			50%				50%								0	0	10	0	0	0	10	0	0	0	0	0	0	0	20
DS04.1	13						100%									0	0	0	0	0	13	0	0	0	0	0	0	0	0	13
DS05	12						100%									0	0	0	0	0	12	0	0	0	0	0	0	0	0	12
DS06	47									100%						0	0	0	0	0	0	0	0	47	0	0	0	0	0	47
DS06.1	2									100%						0	0	0	0	0	0	0	0	2	0	0	0	0	0	2
DS06.2	1									100%						0	0	0	0	0	0	0	0	1	0	0	0	0	0	1
DS06.3	1						100%									0	0	0	0	0	1	0	0	0	0	0	0	0	0	1
DS07	1													100%		0	0	0	0	0	0	0	0	0	0	0	0	1	0	1
DS07.1	0															0	0	0	0	0	0	0	0	0	0	0	0	0	0	0
DS07.2	0															0	0	0	0	0	0	0	0	0	0	0	0	0	0	0
DS08	6							20%					80%			0	0	0	0	0	0	1	0	0	0	0	5	0	0	6
DS08.1	0															0	0	0	0	0	0	0	0	0	0	0	0	0	0	0
DS09	5					50%			50%							0	0	0	0	3	0	0	3	0	0	0	0	0	0	5
DS09.1	1								100%							0	0	0	0	0	0	0	1	0	0	0	0	0	0	1
DS10	96							25%		75%						0	0	0	0	0	0	24	0	72	0	0	0	0	0	96
DS11	5					50%			50%							0	0	0	0	3	0	0	3	0	0	0	0	0	0	5
DS12	1				50%							50%				0	0	0	1	0	0	0	0	0	0	1	0	0	0	1
DS12.1	50				50%							50%				0	0	0	25	0	0	0	0	0	0	25	0	0	0	50
DS12.2	119										100%					0	0	0	0	0	0	0	0	0	119	0	0	0	0	119
DS12.3	0															0	0	0	0	0	0	0	0	0	0	0	0	0	0	0
DS12.4	0															0	0	0	0	0	0	0	0	0	0	0	0	0	0	0
DS13.2	20								75%			25%				0	0	0	0	0	0	0	15	0	0	5	0	0	0	20
DS13.3	85										50%				50%	0	0	0	0	0	0	0	0	0	43	0	0	0	43	85
DS13.8	46								75%			25%				0	0	0	0	0	0	0	35	0	0	12	0	0	0	46
DS14	279											100%				0	0	0	0	0	0	0	0	0	0	279	0	0	0	279
DS14.6	142											100%				0	0	0	0	0	0	0	0	0	0	142	0	0	0	142
DS14.7	0															0	0	0	0	0	0	0	0	0	0	0	0	0	0	0
DS14.8	54											100%				0	0	0	0	0	0	0	0	0	0	54	0	0	0	54
DS15	52								100%							0	0	0	0	0	0	0	52	0	0	0	0	0	0	52
DS16	102											100%				0	0	0	0	0	0	0	0	0	0	102	0	0	0	102
DS16.1	26								75%			25%				0	0	0	0	0	0	0	20	0	0	7	0	0	0	26
DS17.1	99	30%	70%													30	69	0	0	0	0	0	0	0	0	0	0	0	0	99
DS17.2	0															0	0	0	0	0	0	0	0	0	0	0	0	0	0	0
DS18	0															0	0	0	0	0	0	0	0	0	0	0	0	0	0	0
Total	**1285**															30	69	10	26	5	26	35	127	122	162	626	5	1	43	1285
OVERALL DOA ESTIMATED																**2%**	**5%**	**1%**	**2%**	**0%**	**2%**	**3%**	**10%**	**9%**	**13%**	**49%**	**0%**	**0%**	**3%**	**100%**

TRANSPORTATION STUDY AREA
MERCER MS / MS-5

DS18
DS04.1
DS04
DS08.1
DS06.3
DS05
DS08
DS11
DS10
DS06.2
DS06.1
DS09
DS06
DS07.2
DS17.1
DS17.2
DS13.2
DS17
DS13.7
DS13.1
DS13.8
DS13.4
DS13.3
DS14.4
DS16.1
DS09.1
DS14.3
DS13
DS14.5
DS12.2
DS14.2
DS13.6
DS14.8
DS16
DS07.1
DS12.3
DS07
DS13.5
DS14.1
DS14.6
DS14
DS12
DS14.7
DS12.4
DS12.1
DS15

MIDDLEBURG
DULLES AIRPORT

ALDIE ES
ARCOLA ES
HS-7
MERCER MS
FREEDOM HS
HUTCHISON FARM ES
LITTLE RIVER ES
MS-5
PINEBROOK ES
ES-20
LIBERTY ES

MAP KEY

- SCHOOL SITES
- PLANNING ZONES
- MERCER MS
- MS-5
- ROADS

0 1 2 3 4 Miles

2

Prepared by LCPS Department of Planning and Legislative Services November 2009

HIGH SCHOOL DOA ESTIMATION FOR 2012-2013 (FREEDOM HS/HS-7) (Mixed Feed)

		Direction of Approach for each Zone														Traffic Generated from Each Zone														
DS Zones	Students	NB Stone Springs then WB TC Pkwy	SB Stone Springs then WB TC Pkwy	SB Route 15	NB Gum Spring Rd (South of Braddock)	SB Rel Rt. 659	EB Route 50 then SB Rt 15	EB Route 50	WB Route 50	EB Braddock	WB Braddock (West of Gum Spring)	WB Braddock (East of Gum Spring)	SB Fleetwood/ Goshen	NB Lightridge Farm	EB Destiny Dr then SB Gum Spring	NB Stone Springs then WB TC Pkwy	SB Stone Springs then WB TC Pkwy	SB Route 15	NB Gum Spring Rd (South of Braddock)	SB Rel Rt. 659	EB Route 50 then SB Rt 15	EB Route 50	WB Route 50	EB Braddock	WB Braddock (West of Gum Spring)	WB Braddock (East of Gum Spring)	SB Fleetwood/ Goshen	NB Lightridge Farm	EB Destiny Dr then SB Gum Spring	TOTAL
DS04	20			50%				50%								0	0	10	0	0	0	10	0	0	0	0	0	0	0	20
DS04.1	13						100%									0	0	0	0	0	13	0	0	0	0	0	0	0	0	13
DS05	12						100%									0	0	0	0	0	12	0	0	0	0	0	0	0	0	12
DS06	47									100%						0	0	0	0	0	0	0	0	47	0	0	0	0	0	47
DS06.1	2									100%						0	0	0	0	0	0	0	0	2	0	0	0	0	0	2
DS06.2	1									100%						0	0	0	0	0	0	0	0	1	0	0	0	0	0	1
DS06.3	1						100%									0	0	0	0	0	1	0	0	0	0	0	0	0	0	1
DS07	1													100%		0	0	0	0	0	0	0	0	0	0	0	0	1	0	1
DS07.1	0															0	0	0	0	0	0	0	0	0	0	0	0	0	0	0
DS07.2	0															0	0	0	0	0	0	0	0	0	0	0	0	0	0	0
DS08	6							20%					80%			0	0	0	0	0	0	1	0	0	0	0	5	0	0	6
DS08.1	0															0	0	0	0	0	0	0	0	0	0	0	0	0	0	0
DS09	5					50%			50%							0	0	0	0	3	0	0	3	0	0	0	0	0	0	5
DS09.1	1								100%							0	0	0	0	0	0	0	1	0	0	0	0	0	0	1
DS10	96							25%		75%						0	0	0	0	0	0	24	0	72	0	0	0	0	0	96
DS11	5					50%			50%							0	0	0	0	3	0	0	3	0	0	0	0	0	0	5
DS12	1				50%							50%				0	0	0	1	0	0	0	0	0	0	1	0	0	0	1
DS12.1	50				50%							50%				0	0	0	25	0	0	0	0	0	0	25	0	0	0	50
DS12.2	119										100%					0	0	0	0	0	0	0	0	0	119	0	0	0	0	119
DS12.3	0															0	0	0	0	0	0	0	0	0	0	0	0	0	0	0
DS12.4	0															0	0	0	0	0	0	0	0	0	0	0	0	0	0	0
DS13.3	85										50%				50%	0	0	0	0	0	0	0	0	0	43	0	0	0	43	85
DS13.8	46								75%			25%				0	0	0	0	0	0	0	35	0	0	12	0	0	0	46
DS13.9	50								75%			25%				0	0	0	0	0	0	0	38	0	0	13	0	0	0	50
DS14.4	57								75%			25%				0	0	0	0	0	0	0	43	0	0	14	0	0	0	57
DS14.7	0															0	0	0	0	0	0	0	0	0	0	0	0	0	0	0
DS15	52								100%							0	0	0	0	0	0	0	52	0	0	0	0	0	0	52
DS16	102											100%				0	0	0	0	0	0	0	0	0	0	102	0	0	0	102
DS16.1	26								75%			25%				0	0	0	0	0	0	0	20	0	0	7	0	0	0	26
DS17	122	100%														122	0	0	0	0	0	0	0	0	0	0	0	0	0	122
DS17.1	99	30%	70%													30	69	0	0	0	0	0	0	0	0	0	0	0	0	99
DS17.2	0															0	0	0	0	0	0	0	0	0	0	0	0	0	0	0
DS18	0															0	0	0	0	0	0	0	0	0	0	0	0	0	0	0
Total	**1019**															152	69	10	26	5	26	35	192	122	162	172	5	1	43	1019
OVERALL DOA ESTIMATED																**15%**	**7%**	**1%**	**3%**	**0%**	**3%**	**3%**	**19%**	**12%**	**16%**	**17%**	**0%**	**0%**	**4%**	**100%**

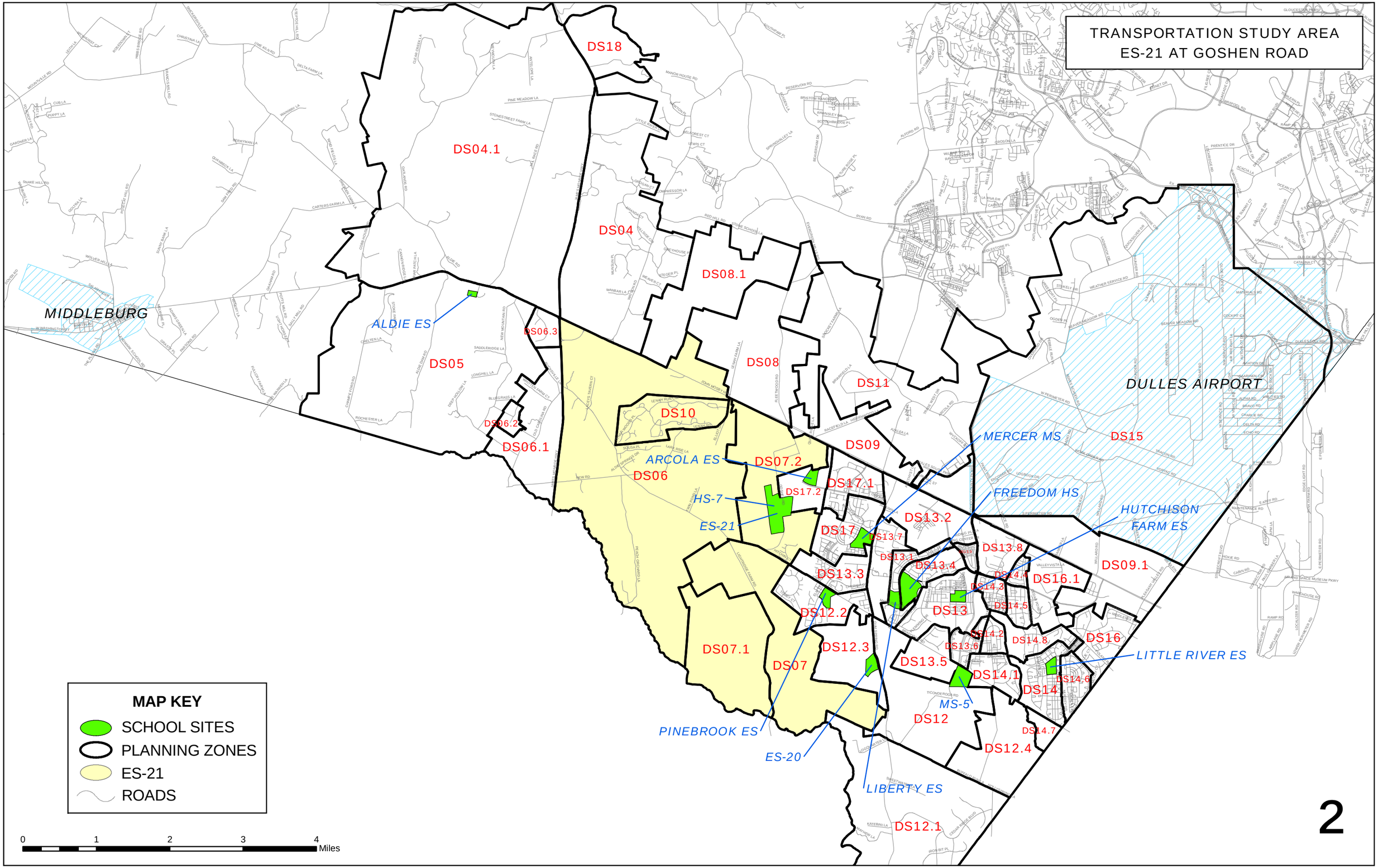

Prepared by LCPS Department of Planning and Legislative Services November 2009

ELEMENTARY SCHOOL DOA ESTIMATION FOR 2015-2016										
		Direction of Approach for each Zone				Traffic Generated from Each Zone				
DS Zones	Students	EB Route 50	SB Goshen	EB Braddock	NB Lightridge Farm	EB Route 50	SB Goshen	EB Braddock	NB Lightridge Farm	TOTAL
DS06	55			100%		0	0	55	0	55
DS07	64				100%	0	0	0	64	64
DS07.1	29				100%	0	0	0	29	29
DS07.2	34		80%	20%		0	27	7	0	34
DS10	149	25%		75%		37	0	112	0	149
Total	**331**					37	27	174	93	331
OVERALL DOA ESTIMATED						**11%**	**8%**	**52%**	**28%**	**100%**

APPENDIX I-1

INTERSECTION CAPACITY ANALYSIS RESULTS– FUTURE CONDITIONS WITH PROPOSED DEVELOPMENT (2012) – ALTERNATIVE 1

Movement	EBL	EBT	EBR	WBL	WBT	WBR	NBL	NBT	NBR	SBL	SBT	SBR
Lane Configurations												
Volume (veh/h)	10	872	47	82	384	12	29	8	65	4	1	0
Sign Control		Free			Free			Stop			Stop	
Grade		0%			0%			0%			0%	
Peak Hour Factor	0.92	0.92	0.92	0.92	0.92	0.92	0.92	0.92	0.92	0.92	0.92	0.92
Hourly flow rate (vph)	11	948	51	89	417	13	32	9	71	4	1	0
Pedestrians												
Lane Width (ft)												
Walking Speed (ft/s)												
Percent Blockage												
Right turn flare (veh)												
Median type		None			None							
Median storage veh)												
Upstream signal (ft)												
pX, platoon unblocked												
vC, conflicting volume	430			999			1357	1578	474	1166	1616	209
vC1, stage 1 conf vol												
vC2, stage 2 conf vol												
vCu, unblocked vol	430			999			1357	1578	474	1166	1616	209
tC, single (s)	4.1			4.2			7.6	6.5	7.0	7.5	6.5	6.9
tC, 2 stage (s)												
tF (s)	2.2			2.2			3.5	4.0	3.3	3.5	4.0	3.3
p0 queue free %	99			87			67	91	87	96	99	100
cM capacity (veh/h)	1125			677			94	93	534	107	88	797

Direction, Lane #	EB 1	EB 2	EB 3	EB 4	WB 1	WB 2	WB 3	WB 4	NB 1	SB 1
Volume Total	11	474	474	51	89	209	209	13	111	5
Volume Left	11	0	0	0	89	0	0	0	32	4
Volume Right	0	0	0	51	0	0	0	13	71	0
cSH	1125	1700	1700	1700	677	1700	1700	1700	198	103
Volume to Capacity	0.01	0.28	0.28	0.03	0.13	0.12	0.12	0.01	0.56	0.05
Queue Length 95th (ft)	1	0	0	0	11	0	0	0	75	4
Control Delay (s)	8.2	0.0	0.0	0.0	11.1	0.0	0.0	0.0	44.1	41.9
Lane LOS	A				B				E	E
Approach Delay (s)	0.1				1.9				44.1	41.9
Approach LOS									E	E

Intersection Summary				
Average Delay		3.8		
Intersection Capacity Utilization		44.4%	ICU Level of Service	A
Analysis Period (min)		15		

Movement	EBL	EBR	NBL	NBT	SBT	SBR
Lane Configurations						
Volume (veh/h)	40	67	43	312	325	39
Sign Control	Stop			Free	Free	
Grade	0%			0%	0%	
Peak Hour Factor	0.92	0.92	0.92	0.92	0.92	0.92
Hourly flow rate (vph)	43	73	47	339	353	42
Pedestrians						
Lane Width (ft)						
Walking Speed (ft/s)						
Percent Blockage						
Right turn flare (veh)						
Median type				None	None	
Median storage veh)						
Upstream signal (ft)						
pX, platoon unblocked						
vC, conflicting volume	786	353	353			
vC1, stage 1 conf vol						
vC2, stage 2 conf vol						
vCu, unblocked vol	786	353	353			
tC, single (s)	6.4	6.2	4.1			
tC, 2 stage (s)						
tF (s)	3.5	3.3	2.2			
p0 queue free %	87	89	96			
cM capacity (veh/h)	343	690	1205			

Direction, Lane #	EB 1	EB 2	NB 1	SB 1	SB 2
Volume Total	43	73	386	353	42
Volume Left	43	0	47	0	0
Volume Right	0	73	0	0	42
cSH	343	690	1205	1700	1700
Volume to Capacity	0.13	0.11	0.04	0.21	0.02
Queue Length 95th (ft)	11	9	3	0	0
Control Delay (s)	17.0	10.8	1.3	0.0	0.0
Lane LOS	C	B	A		
Approach Delay (s)	13.1		1.3	0.0	
Approach LOS	B				

Intersection Summary				
Average Delay		2.3		
Intersection Capacity Utilization		49.2%	ICU Level of Service	A
Analysis Period (min)		15		

HCM Signalized Intersection Capacity Analysis
300: Braddock Road & Gum Spring Road

LCPS (HS 7)
2012 Total Future

Movement	EBL	EBT	EBR	WBL	WBT	WBR	NBL	NBT	NBR	SBL	SBT	SBR
Lane Configurations												
Volume (vph)	125	500	45	87	274	206	39	248	112	275	165	73
Ideal Flow (vphpl)	1900	1900	1900	1900	1900	1900	1900	1900	1900	1900	1900	1900
Total Lost time (s)	7.0	7.0	7.0	7.0	7.0	7.0	7.0	7.0		7.0	7.0	7.0
Lane Util. Factor	1.00	1.00	1.00	1.00	1.00	1.00	1.00	0.95		1.00	0.95	1.00
Frt	1.00	1.00	0.85	1.00	1.00	0.85	1.00	0.95		1.00	1.00	0.85
Flt Protected	0.95	1.00	1.00	0.95	1.00	1.00	0.95	1.00		0.95	1.00	1.00
Satd. Flow (prot)	1770	1863	1583	1770	1863	1583	1752	3374		1770	3539	1583
Flt Permitted	0.44	1.00	1.00	0.19	1.00	1.00	0.64	1.00		0.29	1.00	1.00
Satd. Flow (perm)	812	1863	1583	359	1863	1583	1179	3374		547	3539	1583
Peak-hour factor, PHF	0.92	0.92	0.92	0.92	0.92	0.92	0.92	0.92	0.92	0.92	0.92	0.92
Adj. Flow (vph)	136	543	49	95	298	224	42	270	122	299	179	79
RTOR Reduction (vph)	0	0	31	0	0	104	0	47	0	0	0	51
Lane Group Flow (vph)	136	543	18	95	298	120	42	345	0	299	179	28
Heavy Vehicles (%)	2%	2%	2%	2%	2%	2%	3%	2%	2%	2%	2%	2%
Turn Type	pm+pt		pm+ov	pm+pt		pm+ov	pm+pt			pm+pt		pm+ov
Protected Phases	7	4	5	3	8	1	5	2		1	6	7
Permitted Phases	4		4	8		8	2			6		6
Actuated Green, G (s)	38.5	33.3	36.3	34.1	31.1	46.6	19.7	16.7		39.2	29.2	34.4
Effective Green, g (s)	38.5	33.3	36.3	34.1	31.1	46.6	19.7	16.7		39.2	29.2	34.4
Actuated g/C Ratio	0.40	0.35	0.38	0.35	0.32	0.48	0.20	0.17		0.41	0.30	0.36
Clearance Time (s)	7.0	7.0	7.0	7.0	7.0	7.0	7.0	7.0		7.0	7.0	7.0
Vehicle Extension (s)	3.0	3.0	3.0	3.0	3.0	3.0	3.0	3.0		3.0	3.0	3.0
Lane Grp Cap (vph)	376	643	710	171	600	879	259	584		419	1071	679
v/s Ratio Prot	c0.02	c0.29	0.00	0.02	0.16	0.02	0.01	0.10		c0.11	0.05	0.00
v/s Ratio Perm	0.12		0.01	0.18		0.05	0.03			c0.18		0.02
v/c Ratio	0.36	0.84	0.03	0.56	0.50	0.14	0.16	0.59		0.71	0.17	0.04
Uniform Delay, d1	19.3	29.2	19.0	25.3	26.4	13.8	31.3	36.8		21.3	24.7	20.3
Progression Factor	1.00	1.00	1.00	1.00	1.00	1.00	1.00	1.00		1.00	1.00	1.00
Incremental Delay, d2	0.6	9.9	0.0	3.9	0.6	0.1	0.3	1.6		5.7	0.1	0.0
Delay (s)	19.9	39.1	19.0	29.1	27.0	13.9	31.6	38.4		27.0	24.8	20.3
Level of Service	B	D	B	C	C	B	C	D		C	C	C
Approach Delay (s)		34.2			22.6			37.7			25.3	
Approach LOS		C			C			D			C	

Intersection Summary			
HCM Average Control Delay	29.7	HCM Level of Service	C
HCM Volume to Capacity ratio	0.68		
Actuated Cycle Length (s)	96.5	Sum of lost time (s)	14.0
Intersection Capacity Utilization	80.1%	ICU Level of Service	D
Analysis Period (min)	15		

c Critical Lane Group

HCM Unsignalized Intersection Capacity Analysis
600: Road A & North Star Blvd.

LCPS (HS 7)
2012 Total Future

Movement	EBL	EBR	NBL	NBT	SBT	SBR
Lane Configurations						
Sign Control	Stop			Stop	Stop	
Volume (vph)	10	13	27	65	136	21
Peak Hour Factor	0.92	0.92	0.92	0.92	0.92	0.92
Hourly flow rate (vph)	11	14	29	71	148	23

Direction, Lane #	EB 1	EB 2	NB 1	NB 2	SB 1	SB 2
Volume Total (vph)	11	14	29	71	148	23
Volume Left (vph)	11	0	29	0	0	0
Volume Right (vph)	0	14	0	0	0	23
Hadj (s)	1.35	-0.31	1.50	0.03	0.03	0.44
Departure Headway (s)	6.5	4.8	6.2	4.7	4.7	5.1
Degree Utilization, x	0.02	0.02	0.05	0.09	0.19	0.03
Capacity (veh/h)	526	702	569	745	752	693
Control Delay (s)	8.4	6.7	8.3	7.0	7.6	7.1
Approach Delay (s)	7.5		7.4		7.5	
Approach LOS	A		A		A	

Intersection Summary			
Delay	7.5		
HCM Level of Service	A		
Intersection Capacity Utilization	23.8%	ICU Level of Service	A
Analysis Period (min)	15		

Movement	EBL	EBR	NBL	NBT	SBT	SBR
Lane Configurations						
Sign Control	Stop			Stop	Stop	
Volume (vph)	62	113	241	30	16	133
Peak Hour Factor	0.92	0.92	0.92	0.92	0.92	0.92
Hourly flow rate (vph)	67	123	262	33	17	145

Direction, Lane #	EB 1	EB 2	NB 1	NB 2	SB 1	SB 2
Volume Total (vph)	67	123	262	33	17	145
Volume Left (vph)	67	0	262	0	0	0
Volume Right (vph)	0	123	0	0	0	145
Hadj (s)	0.53	-0.67	0.53	0.90	0.32	-0.67
Departure Headway (s)	6.2	5.0	5.7	6.1	5.7	4.7
Degree Utilization, x	0.12	0.17	0.42	0.06	0.03	0.19
Capacity (veh/h)	544	672	613	570	602	732
Control Delay (s)	8.8	7.8	11.5	8.2	7.6	7.6
Approach Delay (s)	8.1		11.2		7.6	
Approach LOS	A		B		A	

Intersection Summary			
Delay	9.4		
HCM Level of Service	A		
Intersection Capacity Utilization	30.1%	ICU Level of Service	A
Analysis Period (min)	15		

Movement	EBL	EBT	WBT	WBR	SBL	SBR
Lane Configurations						
Volume (veh/h)	87	203	171	224	156	64
Sign Control		Free	Free		Stop	
Grade		0%	0%		0%	
Peak Hour Factor	0.92	0.92	0.92	0.92	0.92	0.92
Hourly flow rate (vph)	95	221	186	243	170	70
Pedestrians						
Lane Width (ft)						
Walking Speed (ft/s)						
Percent Blockage						
Right turn flare (veh)						
Median type		None	None			
Median storage veh)						
Upstream signal (ft)						
pX, platoon unblocked						
vC, conflicting volume	429				717	308
vC1, stage 1 conf vol						
vC2, stage 2 conf vol						
vCu, unblocked vol	429				717	308
tC, single (s)	4.1				6.4	6.2
tC, 2 stage (s)						
tF (s)	2.2				3.5	3.3
p0 queue free %	92				53	91
cM capacity (veh/h)	1114				362	732

Direction, Lane #	EB 1	WB 1	SB 1
Volume Total	315	429	239
Volume Left	95	0	170
Volume Right	0	243	70
cSH	1114	1700	425
Volume to Capacity	0.08	0.25	0.56
Queue Length 95th (ft)	7	0	84
Control Delay (s)	3.1	0.0	23.8
Lane LOS	A		C
Approach Delay (s)	3.1	0.0	23.8
Approach LOS			C

Intersection Summary			
Average Delay	6.8		
Intersection Capacity Utilization	60.8%	ICU Level of Service	B
Analysis Period (min)	15		

Movement	EBL	EBT	EBR	WBL	WBT	WBR	NBL	NBT	NBR	SBL	SBT	SBR
Lane Configurations												
Volume (veh/h)	1	325	24	48	1129	4	29	1	60	1	7	4
Sign Control		Free			Free			Stop			Stop	
Grade		0%			0%			0%			0%	
Peak Hour Factor	0.92	0.92	0.92	0.92	0.92	0.92	0.92	0.92	0.92	0.92	0.92	0.92
Hourly flow rate (vph)	1	353	26	52	1227	4	32	1	65	1	8	4
Pedestrians												
Lane Width (ft)												
Walking Speed (ft/s)												
Percent Blockage												
Right turn flare (veh)												
Median type		None			None							
Median storage veh)												
Upstream signal (ft)												
pX, platoon unblocked												
vC, conflicting volume	1232			379			1082	1691	177	1576	1713	614
vC1, stage 1 conf vol												
vC2, stage 2 conf vol												
vCu, unblocked vol	1232			379			1082	1691	177	1576	1713	614
tC, single (s)	4.1			4.2			7.6	6.5	7.0	7.5	6.5	6.9
tC, 2 stage (s)												
tF (s)	2.2			2.2			3.6	4.0	3.3	3.5	4.0	3.3
p0 queue free %	100			96			79	99	92	98	91	99
cM capacity (veh/h)	562			1161			147	88	827	65	85	435

Direction, Lane #	EB 1	EB 2	EB 3	EB 4	WB 1	WB 2	WB 3	WB 4	NB 1	SB 1
Volume Total	1	177	177	26	52	614	614	4	98	13
Volume Left	1	0	0	0	52	0	0	0	32	1
Volume Right	0	0	0	26	0	0	0	4	65	4
cSH	562	1700	1700	1700	1161	1700	1700	1700	321	113
Volume to Capacity	0.00	0.10	0.10	0.02	0.04	0.36	0.36	0.00	0.31	0.12
Queue Length 95th (ft)	0	0	0	0	4	0	0	0	32	10
Control Delay (s)	11.4	0.0	0.0	0.0	8.2	0.0	0.0	0.0	21.1	41.2
Lane LOS	B				A				C	E
Approach Delay (s)	0.0				0.3				21.1	41.2
Approach LOS									C	E

Intersection Summary				
Average Delay		1.7		
Intersection Capacity Utilization		56.6%	ICU Level of Service	B
Analysis Period (min)		15		

Movement	EBL	EBR	NBL	NBT	SBT	SBR
Lane Configurations						
Volume (veh/h)	33	68	58	177	616	60
Sign Control	Stop			Free	Free	
Grade	0%			0%	0%	
Peak Hour Factor	0.92	0.92	0.92	0.92	0.92	0.92
Hourly flow rate (vph)	36	74	63	192	670	65
Pedestrians						
Lane Width (ft)						
Walking Speed (ft/s)						
Percent Blockage						
Right turn flare (veh)						
Median type				None	None	
Median storage veh)						
Upstream signal (ft)						
pX, platoon unblocked						
vC, conflicting volume	988	670	670			
vC1, stage 1 conf vol						
vC2, stage 2 conf vol						
vCu, unblocked vol	988	670	670			
tC, single (s)	6.5	6.2	4.1			
tC, 2 stage (s)						
tF (s)	3.6	3.3	2.2			
p0 queue free %	86	84	93			
cM capacity (veh/h)	248	457	921			

Direction, Lane #	EB 1	EB 2	NB 1	SB 1	SB 2
Volume Total	36	74	255	670	65
Volume Left	36	0	63	0	0
Volume Right	0	74	0	0	65
cSH	248	457	921	1700	1700
Volume to Capacity	0.14	0.16	0.07	0.39	0.04
Queue Length 95th (ft)	12	14	6	0	0
Control Delay (s)	22.0	14.4	2.8	0.0	0.0
Lane LOS	C	B	A		
Approach Delay (s)	16.9		2.8	0.0	
Approach LOS	C				

Intersection Summary				
Average Delay		2.3		
Intersection Capacity Utilization		58.3%	ICU Level of Service	B
Analysis Period (min)		15		

HCM Signalized Intersection Capacity Analysis
300: Braddock Road & Gum Spring Road

LCPS (HS 7)
2012 Total Future

Movement	EBL	EBT	EBR	WBL	WBT	WBR	NBL	NBT	NBR	SBL	SBT	SBR
Lane Configurations												
Volume (vph)	110	187	52	136	216	109	37	149	62	77	286	75
Ideal Flow (vphpl)	1900	1900	1900	1900	1900	1900	1900	1900	1900	1900	1900	1900
Total Lost time (s)	7.0	7.0	7.0	7.0	7.0	7.0	7.0	7.0		7.0	7.0	7.0
Lane Util. Factor	1.00	1.00	1.00	1.00	1.00	1.00	1.00	0.95		1.00	0.95	1.00
Frt	1.00	1.00	0.85	1.00	1.00	0.85	1.00	0.96		1.00	1.00	0.85
Flt Protected	0.95	1.00	1.00	0.95	1.00	1.00	0.95	1.00		0.95	1.00	1.00
Satd. Flow (prot)	1770	1845	1583	1770	1863	1583	1770	3384		1770	3539	1583
Flt Permitted	0.57	1.00	1.00	0.62	1.00	1.00	0.56	1.00		0.44	1.00	1.00
Satd. Flow (perm)	1063	1845	1583	1149	1863	1583	1048	3384		817	3539	1583
Peak-hour factor, PHF	0.92	0.92	0.92	0.92	0.92	0.92	0.92	0.92	0.92	0.92	0.92	0.92
Adj. Flow (vph)	120	203	57	148	235	118	40	162	67	84	311	82
RTOR Reduction (vph)	0	0	43	0	0	82	0	43	0	0	0	54
Lane Group Flow (vph)	120	203	14	148	235	36	40	186	0	84	311	28
Heavy Vehicles (%)	2%	3%	2%	2%	2%	2%	2%	2%	2%	2%	2%	2%
Turn Type	pm+pt		pm+ov	pm+pt		pm+ov	pm+pt			pm+pt		pm+ov
Protected Phases	7	4	5	3	8	1	5	2		1	6	7
Permitted Phases	4		4	8		8	2			6		6
Actuated Green, G (s)	22.1	13.5	16.6	22.7	13.8	21.1	13.9	10.8		22.3	15.0	23.6
Effective Green, g (s)	22.1	13.5	16.6	22.7	13.8	21.1	13.9	10.8		22.3	15.0	23.6
Actuated g/C Ratio	0.32	0.20	0.24	0.33	0.20	0.31	0.20	0.16		0.33	0.22	0.34
Clearance Time (s)	7.0	7.0	7.0	7.0	7.0	7.0	7.0	7.0		7.0	7.0	7.0
Vehicle Extension (s)	3.0	3.0	3.0	3.0	3.0	3.0	3.0	3.0		3.0	3.0	3.0
Lane Grp Cap (vph)	432	364	545	461	375	649	245	534		368	775	707
v/s Ratio Prot	0.03	0.11	0.00	c0.04	c0.13	0.01	0.01	0.05		c0.02	c0.09	0.01
v/s Ratio Perm	0.05		0.01	0.06		0.02	0.03			0.05		0.01
v/c Ratio	0.28	0.56	0.03	0.32	0.63	0.06	0.16	0.35		0.23	0.40	0.04
Uniform Delay, d1	16.9	24.8	19.8	16.7	25.0	16.7	22.3	25.7		16.5	22.9	14.9
Progression Factor	1.00	1.00	1.00	1.00	1.00	1.00	1.00	1.00		1.00	1.00	1.00
Incremental Delay, d2	0.4	1.9	0.0	0.4	3.3	0.0	0.3	0.4		0.3	0.3	0.0
Delay (s)	17.2	26.7	19.8	17.1	28.3	16.7	22.6	26.1		16.8	23.2	14.9
Level of Service	B	C	B	B	C	B	C	C		B	C	B
Approach Delay (s)		22.6			22.2			25.6			20.7	
Approach LOS		C			C			C			C	

Intersection Summary			
HCM Average Control Delay	22.4	HCM Level of Service	C
HCM Volume to Capacity ratio	0.40		
Actuated Cycle Length (s)	68.5	Sum of lost time (s)	21.0
Intersection Capacity Utilization	52.0%	ICU Level of Service	A
Analysis Period (min)	15		

c Critical Lane Group

HCM Unsignalized Intersection Capacity Analysis
600: Road A & North Star Blvd.

LCPS (HS 7)
2012 Total Future

Movement	EBL	EBR	NBL	NBT	SBT	SBR
Lane Configurations						
Sign Control	Stop			Stop	Stop	
Volume (vph)	14	18	9	92	46	7
Peak Hour Factor	0.92	0.92	0.92	0.92	0.92	0.92
Hourly flow rate (vph)	15	20	10	100	50	8

Direction, Lane #	EB 1	EB 2	NB 1	NB 2	SB 1	SB 2
Volume Total (vph)	15	20	10	100	50	8
Volume Left (vph)	15	0	10	0	0	0
Volume Right (vph)	0	20	0	0	0	8
Hadj (s)	2.20	0.81	1.06	0.03	0.03	0.51
Departure Headway (s)	7.1	5.7	5.7	4.7	4.7	5.2
Degree Utilization, x	0.03	0.03	0.02	0.13	0.07	0.01
Capacity (veh/h)	488	608	616	752	751	676
Control Delay (s)	9.1	7.7	7.6	7.2	6.9	7.1
Approach Delay (s)	8.3		7.2		6.9	
Approach LOS	A		A		A	

Intersection Summary			
Delay	7.3		
HCM Level of Service	A		
Intersection Capacity Utilization	17.2%	ICU Level of Service	A
Analysis Period (min)	15		

Movement	EBL	EBR	NBL	NBT	SBT	SBR
Lane Configurations						
Sign Control	Stop			Stop	Stop	
Volume (vph)	90	163	81	11	19	45
Peak Hour Factor	0.92	0.92	0.92	0.92	0.92	0.92
Hourly flow rate (vph)	98	177	88	12	21	49

Direction, Lane #	EB 1	EB 2	NB 1	NB 2	SB 1	SB 2
Volume Total (vph)	98	177	88	12	21	49
Volume Left (vph)	98	0	88	0	0	0
Volume Right (vph)	0	177	0	0	0	49
Hadj (s)	0.53	-0.67	0.53	0.46	1.43	-0.67
Departure Headway (s)	5.5	4.3	5.8	5.7	6.7	4.6
Degree Utilization, x	0.15	0.21	0.14	0.02	0.04	0.06
Capacity (veh/h)	629	809	596	600	509	735
Control Delay (s)	8.2	7.2	8.5	7.6	8.8	6.7
Approach Delay (s)	7.6		8.4		7.3	
Approach LOS	A		A		A	

Intersection Summary			
Delay	7.7		
HCM Level of Service	A		
Intersection Capacity Utilization	22.8%	ICU Level of Service	A
Analysis Period (min)	15		

Movement	EBL	EBT	WBT	WBR	SBL	SBR
Lane Configurations						
Volume (veh/h)	54	83	106	124	169	69
Sign Control		Free	Free		Stop	
Grade		0%	0%		0%	
Peak Hour Factor	0.92	0.92	0.92	0.92	0.92	0.92
Hourly flow rate (vph)	59	90	115	135	184	75
Pedestrians						
Lane Width (ft)						
Walking Speed (ft/s)						
Percent Blockage						
Right turn flare (veh)						
Median type		None	None			
Median storage veh)						
Upstream signal (ft)						
pX, platoon unblocked						
vC, conflicting volume	250				390	183
vC1, stage 1 conf vol						
vC2, stage 2 conf vol						
vCu, unblocked vol	250				390	183
tC, single (s)	4.1				6.5	6.3
tC, 2 stage (s)						
tF (s)	2.2				3.6	3.4
p0 queue free %	96				68	91
cM capacity (veh/h)	1316				577	850

Direction, Lane #	EB 1	WB 1	SB 1
Volume Total	149	250	259
Volume Left	59	0	184
Volume Right	0	135	75
cSH	1316	1700	636
Volume to Capacity	0.04	0.15	0.41
Queue Length 95th (ft)	3	0	49
Control Delay (s)	3.3	0.0	14.5
Lane LOS	A		B
Approach Delay (s)	3.3	0.0	14.5
Approach LOS			B

Intersection Summary			
Average Delay	6.4		
Intersection Capacity Utilization	44.1%	ICU Level of Service	A
Analysis Period (min)	15		

HCM Unsignalized Intersection Capacity Analysis
100: Route 50 & Goshen Road

LCPS (HS 7)
2012 Total Future

Movement	EBL	EBT	EBR	WBL	WBT	WBR	NBL	NBT	NBR	SBL	SBT	SBR
Lane Configurations												
Volume (veh/h)	10	872	47	82	384	12	29	8	65	4	1	0
Sign Control		Free			Free			Stop			Stop	
Grade		0%			0%			0%			0%	
Peak Hour Factor	0.92	0.92	0.92	0.92	0.92	0.92	0.92	0.92	0.92	0.92	0.92	0.92
Hourly flow rate (vph)	11	948	51	89	417	13	32	9	71	4	1	0
Pedestrians												
Lane Width (ft)												
Walking Speed (ft/s)												
Percent Blockage												
Right turn flare (veh)												
Median type		None			None							
Median storage veh)												
Upstream signal (ft)												
pX, platoon unblocked												
vC, conflicting volume	430			999			1357	1578	474	1166	1616	209
vC1, stage 1 conf vol												
vC2, stage 2 conf vol												
vCu, unblocked vol	430			999			1357	1578	474	1166	1616	209
tC, single (s)	4.1			4.2			7.6	6.5	7.0	7.5	6.5	6.9
tC, 2 stage (s)												
tF (s)	2.2			2.2			3.5	4.0	3.3	3.5	4.0	3.3
p0 queue free %	99			87			67	91	87	96	99	100
cM capacity (veh/h)	1125			677			94	93	534	107	88	797

Direction, Lane #	EB 1	EB 2	EB 3	EB 4	WB 1	WB 2	WB 3	WB 4	NB 1	SB 1
Volume Total	11	474	474	51	89	209	209	13	111	5
Volume Left	11	0	0	0	89	0	0	0	32	4
Volume Right	0	0	0	51	0	0	0	13	71	0
cSH	1125	1700	1700	1700	677	1700	1700	1700	198	103
Volume to Capacity	0.01	0.28	0.28	0.03	0.13	0.12	0.12	0.01	0.56	0.05
Queue Length 95th (ft)	1	0	0	0	11	0	0	0	75	4
Control Delay (s)	8.2	0.0	0.0	0.0	11.1	0.0	0.0	0.0	44.1	41.9
Lane LOS	A				B				E	E
Approach Delay (s)	0.1				1.9				44.1	41.9
Approach LOS									E	E

Intersection Summary				
Average Delay		3.8		
Intersection Capacity Utilization	44.4%	ICU Level of Service	A	
Analysis Period (min)		15		

HCM Unsignalized Intersection Capacity Analysis
200: Tall Cedars Pkwy & Gum Spring Road

LCPS (HS 7)
2012 Total Future

Movement	EBL	EBR	NBL	NBT	SBT	SBR
Lane Configurations						
Volume (veh/h)	40	67	43	312	325	39
Sign Control	Stop			Free	Free	
Grade	0%			0%	0%	
Peak Hour Factor	0.92	0.92	0.92	0.92	0.92	0.92
Hourly flow rate (vph)	43	73	47	339	353	42
Pedestrians						
Lane Width (ft)						
Walking Speed (ft/s)						
Percent Blockage						
Right turn flare (veh)						
Median type				None	None	
Median storage veh)						
Upstream signal (ft)						
pX, platoon unblocked						
vC, conflicting volume	786	353	353			
vC1, stage 1 conf vol						
vC2, stage 2 conf vol						
vCu, unblocked vol	786	353	353			
tC, single (s)	6.4	6.2	4.1			
tC, 2 stage (s)						
tF (s)	3.5	3.3	2.2			
p0 queue free %	87	89	96			
cM capacity (veh/h)	343	690	1205			

Direction, Lane #	EB 1	EB 2	NB 1	SB 1	SB 2
Volume Total	43	73	386	353	42
Volume Left	43	0	47	0	0
Volume Right	0	73	0	0	42
cSH	343	690	1205	1700	1700
Volume to Capacity	0.13	0.11	0.04	0.21	0.02
Queue Length 95th (ft)	11	9	3	0	0
Control Delay (s)	17.0	10.8	1.3	0.0	0.0
Lane LOS	C	B	A		
Approach Delay (s)	13.1		1.3	0.0	
Approach LOS	B				

Intersection Summary				
Average Delay		2.3		
Intersection Capacity Utilization	49.2%	ICU Level of Service	A	
Analysis Period (min)		15		

HCM Signalized Intersection Capacity Analysis
300: Braddock Road & Gum Spring Road

LCPS (HS 7)
2012 Total Future

Movement	EBL	EBT	EBR	WBL	WBT	WBR	NBL	NBT	NBR	SBL	SBT	SBR
Lane Configurations												
Volume (vph)	125	500	45	87	274	206	39	248	112	275	165	73
Ideal Flow (vphpl)	1900	1900	1900	1900	1900	1900	1900	1900	1900	1900	1900	1900
Total Lost time (s)	7.0	7.0	7.0	7.0	7.0	7.0	7.0	7.0		7.0	7.0	7.0
Lane Util. Factor	1.00	1.00	1.00	1.00	1.00	1.00	1.00	0.95		1.00	0.95	1.00
Frt	1.00	1.00	0.85	1.00	1.00	0.85	1.00	0.95		1.00	1.00	0.85
Flt Protected	0.95	1.00	1.00	0.95	1.00	1.00	0.95	1.00		0.95	1.00	1.00
Satd. Flow (prot)	1770	1863	1583	1770	1863	1583	1752	3374		1770	3539	1583
Flt Permitted	0.44	1.00	1.00	0.19	1.00	1.00	0.64	1.00		0.29	1.00	1.00
Satd. Flow (perm)	812	1863	1583	359	1863	1583	1179	3374		547	3539	1583
Peak-hour factor, PHF	0.92	0.92	0.92	0.92	0.92	0.92	0.92	0.92	0.92	0.92	0.92	0.92
Adj. Flow (vph)	136	543	49	95	298	224	42	270	122	299	179	79
RTOR Reduction (vph)	0	0	31	0	0	104	0	47	0	0	0	51
Lane Group Flow (vph)	136	543	18	95	298	120	42	345	0	299	179	28
Heavy Vehicles (%)	2%	2%	2%	2%	2%	2%	3%	2%	2%	2%	2%	2%
Turn Type	pm+pt		pm+ov	pm+pt		pm+ov	pm+pt			pm+pt		pm+ov
Protected Phases	7	4	5	3	8	1	5	2		1	6	7
Permitted Phases	4		4	8		8	2			6		6
Actuated Green, G (s)	38.5	33.3	36.3	34.1	31.1	46.6	19.7	16.7		39.2	29.2	34.4
Effective Green, g (s)	38.5	33.3	36.3	34.1	31.1	46.6	19.7	16.7		39.2	29.2	34.4
Actuated g/C Ratio	0.40	0.35	0.38	0.35	0.32	0.48	0.20	0.17		0.41	0.30	0.36
Clearance Time (s)	7.0	7.0	7.0	7.0	7.0	7.0	7.0	7.0		7.0	7.0	7.0
Vehicle Extension (s)	3.0	3.0	3.0	3.0	3.0	3.0	3.0	3.0		3.0	3.0	3.0
Lane Grp Cap (vph)	376	643	710	171	600	879	259	584		419	1071	679
v/s Ratio Prot	c0.02	c0.29	0.00	0.02	0.16	0.02	0.01	0.10		c0.11	0.05	0.00
v/s Ratio Perm	0.12		0.01	0.18		0.05	0.03			c0.18		0.02
v/c Ratio	0.36	0.84	0.03	0.56	0.50	0.14	0.16	0.59		0.71	0.17	0.04
Uniform Delay, d1	19.3	29.2	19.0	25.3	26.4	13.8	31.3	36.8		21.3	24.7	20.3
Progression Factor	1.00	1.00	1.00	1.00	1.00	1.00	1.00	1.00		1.00	1.00	1.00
Incremental Delay, d2	0.6	9.9	0.0	3.9	0.6	0.1	0.3	1.6		5.7	0.1	0.0
Delay (s)	19.9	39.1	19.0	29.1	27.0	13.9	31.6	38.4		27.0	24.8	20.3
Level of Service	B	D	B	C	C	B	C	D		C	C	C
Approach Delay (s)		34.2			22.6			37.7			25.3	
Approach LOS		C			C			D			C	

Intersection Summary			
HCM Average Control Delay	29.7	HCM Level of Service	C
HCM Volume to Capacity ratio	0.68		
Actuated Cycle Length (s)	96.5	Sum of lost time (s)	14.0
Intersection Capacity Utilization	80.1%	ICU Level of Service	D
Analysis Period (min)	15		

c Critical Lane Group

HCM Unsignalized Intersection Capacity Analysis
600: Road A & North Star Blvd.

LCPS (HS 7)
2012 Total Future

Movement	EBL	EBR	NBL	NBT	SBT	SBR
Lane Configurations						
Sign Control	Stop			Stop	Stop	
Volume (vph)	10	13	27	65	136	21
Peak Hour Factor	0.92	0.92	0.92	0.92	0.92	0.92
Hourly flow rate (vph)	11	14	29	71	148	23

Direction, Lane #	EB 1	EB 2	NB 1	NB 2	SB 1	SB 2
Volume Total (vph)	11	14	29	71	148	23
Volume Left (vph)	11	0	29	0	0	0
Volume Right (vph)	0	14	0	0	0	23
Hadj (s)	1.35	-0.31	1.50	0.03	0.03	0.44
Departure Headway (s)	6.5	4.8	6.2	4.7	4.7	5.1
Degree Utilization, x	0.02	0.02	0.05	0.09	0.19	0.03
Capacity (veh/h)	526	702	569	745	752	693
Control Delay (s)	8.4	6.7	8.3	7.0	7.6	7.1
Approach Delay (s)	7.5		7.4		7.5	
Approach LOS	A		A		A	

Intersection Summary			
Delay	7.5		
HCM Level of Service	A		
Intersection Capacity Utilization	23.8%	ICU Level of Service	A
Analysis Period (min)	15		

Movement	EBL	EBR	NBL	NBT	SBT	SBR
Lane Configurations						
Sign Control	Stop			Stop	Stop	
Volume (vph)	62	113	241	30	16	133
Peak Hour Factor	0.92	0.92	0.92	0.92	0.92	0.92
Hourly flow rate (vph)	67	123	262	33	17	145

Direction, Lane #	EB 1	EB 2	NB 1	NB 2	SB 1	SB 2
Volume Total (vph)	67	123	262	33	17	145
Volume Left (vph)	67	0	262	0	0	0
Volume Right (vph)	0	123	0	0	0	145
Hadj (s)	0.53	-0.67	0.53	0.90	0.32	-0.67
Departure Headway (s)	6.2	5.0	5.7	6.1	5.7	4.7
Degree Utilization, x	0.12	0.17	0.42	0.06	0.03	0.19
Capacity (veh/h)	544	672	613	570	602	732
Control Delay (s)	8.8	7.8	11.5	8.2	7.6	7.6
Approach Delay (s)	8.1		11.2		7.6	
Approach LOS	A		B		A	

Intersection Summary			
Delay	9.4		
HCM Level of Service	A		
Intersection Capacity Utilization	30.1%	ICU Level of Service	A
Analysis Period (min)	15		

Movement	EBL	EBT	WBT	WBR	SBL	SBR
Lane Configurations						
Volume (veh/h)	87	203	171	224	156	64
Sign Control		Free	Free		Stop	
Grade		0%	0%		0%	
Peak Hour Factor	0.92	0.92	0.92	0.92	0.92	0.92
Hourly flow rate (vph)	95	221	186	243	170	70
Pedestrians						
Lane Width (ft)						
Walking Speed (ft/s)						
Percent Blockage						
Right turn flare (veh)						12
Median type		None	None			
Median storage veh)						
Upstream signal (ft)						
pX, platoon unblocked						
vC, conflicting volume	429				596	186
vC1, stage 1 conf vol						
vC2, stage 2 conf vol						
vCu, unblocked vol	429				596	186
tC, single (s)	4.1				6.4	6.2
tC, 2 stage (s)						
tF (s)	2.2				3.5	3.3
p0 queue free %	92				60	92
cM capacity (veh/h)	1114				427	856

Direction, Lane #	EB 1	WB 1	WB 2	SB 1
Volume Total	315	186	243	239
Volume Left	95	0	0	170
Volume Right	0	0	243	70
cSH	1114	1700	1700	602
Volume to Capacity	0.08	0.11	0.14	0.40
Queue Length 95th (ft)	7	0	0	47
Control Delay (s)	3.1	0.0	0.0	16.2
Lane LOS	A			C
Approach Delay (s)	3.1	0.0		16.2
Approach LOS				C

Intersection Summary			
Average Delay	4.9		
Intersection Capacity Utilization	43.1%	ICU Level of Service	A
Analysis Period (min)	15		

Movement	EBL	EBT	EBR	WBL	WBT	WBR	NBL	NBT	NBR	SBL	SBT	SBR
Lane Configurations												
Volume (veh/h)	1	325	24	48	1129	4	29	1	60	1	7	4
Sign Control		Free			Free			Stop			Stop	
Grade		0%			0%			0%			0%	
Peak Hour Factor	0.92	0.92	0.92	0.92	0.92	0.92	0.92	0.92	0.92	0.92	0.92	0.92
Hourly flow rate (vph)	1	353	26	52	1227	4	32	1	65	1	8	4
Pedestrians												
Lane Width (ft)												
Walking Speed (ft/s)												
Percent Blockage												
Right turn flare (veh)												
Median type		None			None							
Median storage veh)												
Upstream signal (ft)												
pX, platoon unblocked												
vC, conflicting volume	1232			379			1082	1691	177	1576	1713	614
vC1, stage 1 conf vol												
vC2, stage 2 conf vol												
vCu, unblocked vol	1232			379			1082	1691	177	1576	1713	614
tC, single (s)	4.1			4.2			7.6	6.5	7.0	7.5	6.5	6.9
tC, 2 stage (s)												
tF (s)	2.2			2.2			3.6	4.0	3.3	3.5	4.0	3.3
p0 queue free %	100			96			79	99	92	98	91	99
cM capacity (veh/h)	562			1161			147	88	827	65	85	435

Direction, Lane #	EB 1	EB 2	EB 3	EB 4	WB 1	WB 2	WB 3	WB 4	NB 1	SB 1
Volume Total	1	177	177	26	52	614	614	4	98	13
Volume Left	1	0	0	0	52	0	0	0	32	1
Volume Right	0	0	0	26	0	0	0	4	65	4
cSH	562	1700	1700	1700	1161	1700	1700	1700	321	113
Volume to Capacity	0.00	0.10	0.10	0.02	0.04	0.36	0.36	0.00	0.31	0.12
Queue Length 95th (ft)	0	0	0	0	4	0	0	0	32	10
Control Delay (s)	11.4	0.0	0.0	0.0	8.2	0.0	0.0	0.0	21.1	41.2
Lane LOS	B				A				C	E
Approach Delay (s)	0.0				0.3				21.1	41.2
Approach LOS									C	E

Intersection Summary				
Average Delay		1.7		
Intersection Capacity Utilization		56.6%	ICU Level of Service	B
Analysis Period (min)		15		

Movement	EBL	EBR	NBL	NBT	SBT	SBR
Lane Configurations						
Volume (veh/h)	33	68	58	177	616	60
Sign Control	Stop			Free	Free	
Grade	0%			0%	0%	
Peak Hour Factor	0.92	0.92	0.92	0.92	0.92	0.92
Hourly flow rate (vph)	36	74	63	192	670	65
Pedestrians						
Lane Width (ft)						
Walking Speed (ft/s)						
Percent Blockage						
Right turn flare (veh)						
Median type				None	None	
Median storage veh)						
Upstream signal (ft)						
pX, platoon unblocked						
vC, conflicting volume	988	670	670			
vC1, stage 1 conf vol						
vC2, stage 2 conf vol						
vCu, unblocked vol	988	670	670			
tC, single (s)	6.5	6.2	4.1			
tC, 2 stage (s)						
tF (s)	3.6	3.3	2.2			
p0 queue free %	86	84	93			
cM capacity (veh/h)	248	457	921			

Direction, Lane #	EB 1	EB 2	NB 1	SB 1	SB 2
Volume Total	36	74	255	670	65
Volume Left	36	0	63	0	0
Volume Right	0	74	0	0	65
cSH	248	457	921	1700	1700
Volume to Capacity	0.14	0.16	0.07	0.39	0.04
Queue Length 95th (ft)	12	14	6	0	0
Control Delay (s)	22.0	14.4	2.8	0.0	0.0
Lane LOS	C	B	A		
Approach Delay (s)	16.9		2.8	0.0	
Approach LOS	C				

Intersection Summary				
Average Delay		2.3		
Intersection Capacity Utilization		58.3%	ICU Level of Service	B
Analysis Period (min)		15		

Movement	EBL	EBT	EBR	WBL	WBT	WBR	NBL	NBT	NBR	SBL	SBT	SBR
Lane Configurations												
Volume (vph)	110	187	52	136	216	109	37	149	62	77	286	75
Ideal Flow (vphpl)	1900	1900	1900	1900	1900	1900	1900	1900	1900	1900	1900	1900
Total Lost time (s)	7.0	7.0	7.0	7.0	7.0	7.0	7.0	7.0		7.0	7.0	7.0
Lane Util. Factor	1.00	1.00	1.00	1.00	1.00	1.00	1.00	0.95		1.00	0.95	1.00
Frt	1.00	1.00	0.85	1.00	1.00	0.85	1.00	0.96		1.00	1.00	0.85
Flt Protected	0.95	1.00	1.00	0.95	1.00	1.00	0.95	1.00		0.95	1.00	1.00
Satd. Flow (prot)	1770	1845	1583	1770	1863	1583	1770	3384		1770	3539	1583
Flt Permitted	0.57	1.00	1.00	0.62	1.00	1.00	0.56	1.00		0.44	1.00	1.00
Satd. Flow (perm)	1063	1845	1583	1149	1863	1583	1048	3384		817	3539	1583
Peak-hour factor, PHF	0.92	0.92	0.92	0.92	0.92	0.92	0.92	0.92	0.92	0.92	0.92	0.92
Adj. Flow (vph)	120	203	57	148	235	118	40	162	67	84	311	82
RTOR Reduction (vph)	0	0	43	0	0	82	0	43	0	0	0	54
Lane Group Flow (vph)	120	203	14	148	235	36	40	186	0	84	311	28
Heavy Vehicles (%)	2%	3%	2%	2%	2%	2%	2%	2%	2%	2%	2%	2%
Turn Type	pm+pt		pm+ov	pm+pt		pm+ov	pm+pt			pm+pt		pm+ov
Protected Phases	7	4	5	3	8	1	5	2		1	6	7
Permitted Phases	4		4	8		8	2			6		6
Actuated Green, G (s)	22.1	13.5	16.6	22.7	13.8	21.1	13.9	10.8		22.3	15.0	23.6
Effective Green, g (s)	22.1	13.5	16.6	22.7	13.8	21.1	13.9	10.8		22.3	15.0	23.6
Actuated g/C Ratio	0.32	0.20	0.24	0.33	0.20	0.31	0.20	0.16		0.33	0.22	0.34
Clearance Time (s)	7.0	7.0	7.0	7.0	7.0	7.0	7.0	7.0		7.0	7.0	7.0
Vehicle Extension (s)	3.0	3.0	3.0	3.0	3.0	3.0	3.0	3.0		3.0	3.0	3.0
Lane Grp Cap (vph)	432	364	545	461	375	649	245	534		368	775	707
v/s Ratio Prot	0.03	0.11	0.00	c0.04	c0.13	0.01	0.01	0.05		c0.02	c0.09	0.01
v/s Ratio Perm	0.05		0.01	0.06		0.02	0.03			0.05		0.01
v/c Ratio	0.28	0.56	0.03	0.32	0.63	0.06	0.16	0.35		0.23	0.40	0.04
Uniform Delay, d1	16.9	24.8	19.8	16.7	25.0	16.7	22.3	25.7		16.5	22.9	14.9
Progression Factor	1.00	1.00	1.00	1.00	1.00	1.00	1.00	1.00		1.00	1.00	1.00
Incremental Delay, d2	0.4	1.9	0.0	0.4	3.3	0.0	0.3	0.4		0.3	0.3	0.0
Delay (s)	17.2	26.7	19.8	17.1	28.3	16.7	22.6	26.1		16.8	23.2	14.9
Level of Service	B	C	B	B	C	B	C	C		B	C	B
Approach Delay (s)		22.6			22.2			25.6			20.7	
Approach LOS		C			C			C			C	

Intersection Summary			
HCM Average Control Delay	22.4	HCM Level of Service	C
HCM Volume to Capacity ratio	0.40		
Actuated Cycle Length (s)	68.5	Sum of lost time (s)	21.0
Intersection Capacity Utilization	52.0%	ICU Level of Service	A
Analysis Period (min)	15		

c Critical Lane Group

Movement	EBL	EBR	NBL	NBT	SBT	SBR
Lane Configurations						
Sign Control	Stop			Stop	Stop	
Volume (vph)	14	18	9	92	46	7
Peak Hour Factor	0.92	0.92	0.92	0.92	0.92	0.92
Hourly flow rate (vph)	15	20	10	100	50	8

Direction, Lane #	EB 1	EB 2	NB 1	NB 2	SB 1	SB 2
Volume Total (vph)	15	20	10	100	50	8
Volume Left (vph)	15	0	10	0	0	0
Volume Right (vph)	0	20	0	0	0	8
Hadj (s)	2.20	0.81	1.06	0.03	0.03	0.51
Departure Headway (s)	7.1	5.7	5.7	4.7	4.7	5.2
Degree Utilization, x	0.03	0.03	0.02	0.13	0.07	0.01
Capacity (veh/h)	488	608	616	752	751	676
Control Delay (s)	9.1	7.7	7.6	7.2	6.9	7.1
Approach Delay (s)	8.3		7.2		6.9	
Approach LOS	A		A		A	

Intersection Summary			
Delay	7.3		
HCM Level of Service	A		
Intersection Capacity Utilization	17.2%	ICU Level of Service	A
Analysis Period (min)	15		

Movement	EBL	EBR	NBL	NBT	SBT	SBR
Lane Configurations						
Sign Control	Stop			Stop	Stop	
Volume (vph)	90	163	81	11	19	45
Peak Hour Factor	0.92	0.92	0.92	0.92	0.92	0.92
Hourly flow rate (vph)	98	177	88	12	21	49

Direction, Lane #	EB 1	EB 2	NB 1	NB 2	SB 1	SB 2
Volume Total (vph)	98	177	88	12	21	49
Volume Left (vph)	98	0	88	0	0	0
Volume Right (vph)	0	177	0	0	0	49
Hadj (s)	0.53	-0.67	0.53	0.46	1.43	-0.67
Departure Headway (s)	5.5	4.3	5.8	5.7	6.7	4.6
Degree Utilization, x	0.15	0.21	0.14	0.02	0.04	0.06
Capacity (veh/h)	629	809	596	600	509	735
Control Delay (s)	8.2	7.2	8.5	7.6	8.8	6.7
Approach Delay (s)	7.6		8.4		7.3	
Approach LOS	A		A		A	

Intersection Summary			
Delay	7.7		
HCM Level of Service	A		
Intersection Capacity Utilization	22.8%	ICU Level of Service	A
Analysis Period (min)	15		

Movement	EBL	EBT	WBT	WBR	SBL	SBR
Lane Configurations						
Volume (veh/h)	54	83	106	124	169	69
Sign Control		Free	Free		Stop	
Grade		0%	0%		0%	
Peak Hour Factor	0.92	0.92	0.92	0.92	0.92	0.92
Hourly flow rate (vph)	59	90	115	135	184	75
Pedestrians						
Lane Width (ft)						
Walking Speed (ft/s)						
Percent Blockage						
Right turn flare (veh)						12
Median type		None	None			
Median storage veh)						
Upstream signal (ft)						
pX, platoon unblocked						
vC, conflicting volume	250				323	115
vC1, stage 1 conf vol						
vC2, stage 2 conf vol						
vCu, unblocked vol	250				323	115
tC, single (s)	4.1				6.5	6.3
tC, 2 stage (s)						
tF (s)	2.2				3.6	3.4
p0 queue free %	96				71	92
cM capacity (veh/h)	1316				631	926

Direction, Lane #	EB 1	WB 1	WB 2	SB 1
Volume Total	149	115	135	259
Volume Left	59	0	0	184
Volume Right	0	0	135	75
cSH	1316	1700	1700	889
Volume to Capacity	0.04	0.07	0.08	0.29
Queue Length 95th (ft)	3	0	0	30
Control Delay (s)	3.3	0.0	0.0	11.9
Lane LOS	A			B
Approach Delay (s)	3.3	0.0		11.9
Approach LOS				B

Intersection Summary			
Average Delay	5.4		
Intersection Capacity Utilization	30.1%	ICU Level of Service	A
Analysis Period (min)	15		

APPENDIX I-2

INTERSECTION CAPACITY ANALYSIS RESULTS– FUTURE CONDITIONS WITH PROPOSED DEVELOPMENT (2012) – ALTERNATIVE 2

Movement	EBL	EBT	EBR	WBL	WBT	WBR	NBL	NBT	NBR	SBL	SBT	SBR
Lane Configurations												
Volume (veh/h)	10	872	42	55	384	12	26	8	52	4	1	0
Sign Control		Free			Free			Stop			Stop	
Grade		0%			0%			0%			0%	
Peak Hour Factor	0.92	0.92	0.92	0.92	0.92	0.92	0.92	0.92	0.92	0.92	0.92	0.92
Hourly flow rate (vph)	11	948	46	60	417	13	28	9	57	4	1	0
Pedestrians												
Lane Width (ft)												
Walking Speed (ft/s)												
Percent Blockage												
Right turn flare (veh)												
Median type		None			None							
Median storage veh)												
Upstream signal (ft)												
pX, platoon unblocked												
vC, conflicting volume	430			993			1298	1520	474	1093	1552	209
vC1, stage 1 conf vol												
vC2, stage 2 conf vol												
vCu, unblocked vol	430			993			1298	1520	474	1093	1552	209
tC, single (s)	4.1			4.2			7.6	6.5	6.9	7.5	6.5	6.9
tC, 2 stage (s)												
tF (s)	2.2			2.2			3.5	4.0	3.3	3.5	4.0	3.3
p0 queue free %	99			91			74	92	89	97	99	100
cM capacity (veh/h)	1125			680			107	106	537	131	102	797

Direction, Lane #	EB 1	EB 2	EB 3	EB 4	WB 1	WB 2	WB 3	WB 4	NB 1	SB 1
Volume Total	11	474	474	46	60	209	209	13	93	5
Volume Left	11	0	0	0	60	0	0	0	28	4
Volume Right	0	0	0	46	0	0	0	13	57	0
cSH	1125	1700	1700	1700	680	1700	1700	1700	208	124
Volume to Capacity	0.01	0.28	0.28	0.03	0.09	0.12	0.12	0.01	0.45	0.04
Queue Length 95th (ft)	1	0	0	0	7	0	0	0	53	3
Control Delay (s)	8.2	0.0	0.0	0.0	10.8	0.0	0.0	0.0	35.8	35.4
Lane LOS	A				B				E	E
Approach Delay (s)	0.1				1.3				35.8	35.4
Approach LOS									E	E

Intersection Summary				
Average Delay		2.7		
Intersection Capacity Utilization		42.3%	ICU Level of Service	A
Analysis Period (min)		15		

Movement	EBL	EBR	NBL	NBT	SBT	SBR
Lane Configurations						
Volume (veh/h)	35	67	43	312	325	29
Sign Control	Stop			Free	Free	
Grade	0%			0%	0%	
Peak Hour Factor	0.92	0.92	0.92	0.92	0.92	0.92
Hourly flow rate (vph)	38	73	47	339	353	32
Pedestrians						
Lane Width (ft)						
Walking Speed (ft/s)						
Percent Blockage						
Right turn flare (veh)						
Median type				None	None	
Median storage veh)						
Upstream signal (ft)						
pX, platoon unblocked						
vC, conflicting volume	786	353	353			
vC1, stage 1 conf vol						
vC2, stage 2 conf vol						
vCu, unblocked vol	786	353	353			
tC, single (s)	6.4	6.2	4.1			
tC, 2 stage (s)						
tF (s)	3.5	3.3	2.2			
p0 queue free %	89	89	96			
cM capacity (veh/h)	347	690	1205			

Direction, Lane #	EB 1	EB 2	NB 1	SB 1	SB 2
Volume Total	38	73	386	353	32
Volume Left	38	0	47	0	0
Volume Right	0	73	0	0	32
cSH	347	690	1205	1700	1700
Volume to Capacity	0.11	0.11	0.04	0.21	0.02
Queue Length 95th (ft)	9	9	3	0	0
Control Delay (s)	16.6	10.8	1.3	0.0	0.0
Lane LOS	C	B	A		
Approach Delay (s)	12.8		1.3	0.0	
Approach LOS	B				

Intersection Summary				
Average Delay		2.2		
Intersection Capacity Utilization		49.2%	ICU Level of Service	A
Analysis Period (min)		15		

HCM Signalized Intersection Capacity Analysis
300: Braddock Road & Gum Spring Road

LCPS (HS 7)
2012 Total Future

Movement	EBL	EBT	EBR	WBL	WBT	WBR	NBL	NBT	NBR	SBL	SBT	SBR
Lane Configurations												
Volume (vph)	122	577	43	87	438	206	34	248	112	275	165	67
Ideal Flow (vphpl)	1900	1900	1900	1900	1900	1900	1900	1900	1900	1900	1900	1900
Total Lost time (s)	7.0	7.0	7.0	7.0	7.0	7.0	7.0	7.0		7.0	7.0	7.0
Lane Util. Factor	1.00	1.00	1.00	1.00	1.00	1.00	1.00	0.95		1.00	0.95	1.00
Frt	1.00	1.00	0.85	1.00	1.00	0.85	1.00	0.95		1.00	1.00	0.85
Flt Protected	0.95	1.00	1.00	0.95	1.00	1.00	0.95	1.00		0.95	1.00	1.00
Satd. Flow (prot)	1770	1845	1583	1770	1863	1583	1770	3374		1770	3539	1583
Flt Permitted	0.25	1.00	1.00	0.13	1.00	1.00	0.64	1.00		0.28	1.00	1.00
Satd. Flow (perm)	468	1845	1583	249	1863	1583	1190	3374		525	3539	1583
Peak-hour factor, PHF	0.92	0.92	0.92	0.92	0.92	0.92	0.92	0.92	0.92	0.92	0.92	0.92
Adj. Flow (vph)	133	627	47	95	476	224	37	270	122	299	179	73
RTOR Reduction (vph)	0	0	28	0	0	85	0	47	0	0	0	48
Lane Group Flow (vph)	133	627	19	95	476	139	37	345	0	299	179	25
Heavy Vehicles (%)	2%	3%	2%	2%	2%	2%	2%	2%	2%	2%	2%	2%
Turn Type	pm+pt		pm+ov	pm+pt		pm+ov	pm+pt			pm+pt		pm+ov
Protected Phases	7	4	5	3	8	1	5	2		1	6	7
Permitted Phases	4		4	8		8	2			6		6
Actuated Green, G (s)	43.8	38.7	41.7	39.6	36.6	52.5	20.2	17.2		40.1	30.1	35.2
Effective Green, g (s)	43.8	38.7	41.7	39.6	36.6	52.5	20.2	17.2		40.1	30.1	35.2
Actuated g/C Ratio	0.43	0.38	0.41	0.39	0.36	0.51	0.20	0.17		0.39	0.29	0.34
Clearance Time (s)	7.0	7.0	7.0	7.0	7.0	7.0	7.0	7.0		7.0	7.0	7.0
Vehicle Extension (s)	3.0	3.0	3.0	3.0	3.0	3.0	3.0	3.0		3.0	3.0	3.0
Lane Grp Cap (vph)	264	695	750	140	663	916	251	565		397	1036	650
v/s Ratio Prot	c0.02	c0.34	0.00	0.02	0.26	0.02	0.00	0.10		c0.12	0.05	0.00
v/s Ratio Perm	0.19		0.01	0.24		0.06	0.02			c0.18		0.01
v/c Ratio	0.50	0.90	0.03	0.68	0.72	0.15	0.15	0.61		0.75	0.17	0.04
Uniform Delay, d1	20.3	30.3	18.3	26.9	28.6	13.3	33.9	39.7		23.9	27.1	22.5
Progression Factor	1.00	1.00	1.00	1.00	1.00	1.00	1.00	1.00		1.00	1.00	1.00
Incremental Delay, d2	1.5	15.0	0.0	12.3	3.7	0.1	0.3	1.9		7.9	0.1	0.0
Delay (s)	21.9	45.2	18.4	39.2	32.4	13.4	34.2	41.6		31.8	27.2	22.5
Level of Service	C	D	B	D	C	B	C	D		C	C	C
Approach Delay (s)		39.8			27.8			40.9			29.0	
Approach LOS		D			C			D			C	

Intersection Summary			
HCM Average Control Delay	34.0	HCM Level of Service	C
HCM Volume to Capacity ratio	0.74		
Actuated Cycle Length (s)	102.8	Sum of lost time (s)	14.0
Intersection Capacity Utilization	84.2%	ICU Level of Service	E
Analysis Period (min)	15		

c Critical Lane Group

HCM Unsignalized Intersection Capacity Analysis
600: Road A & North Star Blvd.

LCPS (HS 7)
2012 Total Future

Movement	EBL	EBR	NBL	NBT	SBT	SBR
Lane Configurations						
Sign Control	Stop			Stop	Stop	
Volume (vph)	4	19	40	26	52	9
Peak Hour Factor	0.92	0.92	0.92	0.92	0.92	0.92
Hourly flow rate (vph)	4	21	43	28	57	10

Direction, Lane #	EB 1	EB 2	NB 1	NB 2	SB 1	SB 2
Volume Total (vph)	4	21	43	28	57	10
Volume Left (vph)	4	0	43	0	0	0
Volume Right (vph)	0	21	0	0	0	10
Hadj (s)	1.35	-0.16	1.49	0.03	0.03	0.63
Departure Headway (s)	6.2	4.7	6.1	4.6	4.7	5.3
Degree Utilization, x	0.01	0.03	0.07	0.04	0.07	0.01
Capacity (veh/h)	557	738	579	759	765	672
Control Delay (s)	8.0	6.6	8.4	6.6	6.8	7.1
Approach Delay (s)	6.9		7.7		6.9	
Approach LOS	A		A		A	

Intersection Summary			
Delay	7.2		
HCM Level of Service	A		
Intersection Capacity Utilization	18.9%	ICU Level of Service	A
Analysis Period (min)	15		

Movement	EBL	EBR	NBL	NBT	SBT	SBR
Lane Configurations						
Sign Control	Stop			Stop	Stop	
Volume (vph)	23	167	357	43	22	49
Peak Hour Factor	0.92	0.92	0.92	0.92	0.92	0.92
Hourly flow rate (vph)	25	182	388	47	24	53

Direction, Lane #	EB 1	EB 2	NB 1	NB 2	SB 1	SB 2
Volume Total (vph)	25	182	388	47	24	53
Volume Left (vph)	25	0	388	0	0	0
Volume Right (vph)	0	182	0	0	0	53
Hadj (s)	0.53	-0.67	0.53	0.90	0.46	-0.67
Departure Headway (s)	6.4	5.2	5.7	6.1	6.0	4.9
Degree Utilization, x	0.04	0.26	0.61	0.08	0.04	0.07
Capacity (veh/h)	526	648	612	574	562	690
Control Delay (s)	8.5	8.8	16.1	8.4	8.1	7.1
Approach Delay (s)	8.8		15.3		7.4	
Approach LOS	A		C		A	

Intersection Summary			
Delay	12.6		
HCM Level of Service	B		
Intersection Capacity Utilization	36.4%	ICU Level of Service	A
Analysis Period (min)	15		

Movement	EBL	EBT	WBT	WBR	SBL	SBR
Lane Configurations						
Volume (veh/h)	71	203	171	368	224	57
Sign Control		Free	Free		Stop	
Grade		0%	0%		0%	
Peak Hour Factor	0.92	0.92	0.92	0.92	0.92	0.92
Hourly flow rate (vph)	77	221	186	400	243	62
Pedestrians						
Lane Width (ft)						
Walking Speed (ft/s)						
Percent Blockage						
Right turn flare (veh)						
Median type		None	None			
Median storage veh)						
Upstream signal (ft)						
pX, platoon unblocked						
vC, conflicting volume	586				761	386
vC1, stage 1 conf vol						
vC2, stage 2 conf vol						
vCu, unblocked vol	586				761	386
tC, single (s)	4.1				6.4	6.2
tC, 2 stage (s)						
tF (s)	2.2				3.5	3.3
p0 queue free %	92				29	91
cM capacity (veh/h)	979				344	662

Direction, Lane #	EB 1	WB 1	SB 1
Volume Total	298	586	305
Volume Left	77	0	243
Volume Right	0	400	62
cSH	979	1700	381
Volume to Capacity	0.08	0.34	0.80
Queue Length 95th (ft)	6	0	174
Control Delay (s)	2.9	0.0	43.3
Lane LOS	A		E
Approach Delay (s)	2.9	0.0	43.3
Approach LOS			E

Intersection Summary			
Average Delay	11.8		
Intersection Capacity Utilization	72.1%	ICU Level of Service	C
Analysis Period (min)	15		

Movement	EBL	EBT	EBR	WBL	WBT	WBR	NBL	NBT	NBR	SBL	SBT	SBR
Lane Configurations												
Volume (veh/h)	1	325	22	39	1129	4	26	1	42	1	7	4
Sign Control		Free			Free			Stop			Stop	
Grade		0%			0%			0%			0%	
Peak Hour Factor	0.92	0.92	0.92	0.92	0.92	0.92	0.92	0.92	0.92	0.92	0.92	0.92
Hourly flow rate (vph)	1	353	24	42	1227	4	28	1	46	1	8	4
Pedestrians												
Lane Width (ft)												
Walking Speed (ft/s)												
Percent Blockage												
Right turn flare (veh)												
Median type		None			None							
Median storage veh)												
Upstream signal (ft)												
pX, platoon unblocked												
vC, conflicting volume	1232			377			1062	1672	177	1537	1691	614
vC1, stage 1 conf vol												
vC2, stage 2 conf vol												
vCu, unblocked vol	1232			377			1062	1672	177	1537	1691	614
tC, single (s)	4.1			4.2			7.7	6.5	7.0	7.5	6.5	6.9
tC, 2 stage (s)												
tF (s)	2.2			2.2			3.6	4.0	3.3	3.5	4.0	3.3
p0 queue free %	100			96			81	99	94	98	91	99
cM capacity (veh/h)	562			1171			153	91	827	72	89	435

Direction, Lane #	EB 1	EB 2	EB 3	EB 4	WB 1	WB 2	WB 3	WB 4	NB 1	SB 1
Volume Total	1	177	177	24	42	614	614	4	75	13
Volume Left	1	0	0	0	42	0	0	0	28	1
Volume Right	0	0	0	24	0	0	0	4	46	4
cSH	562	1700	1700	1700	1171	1700	1700	1700	297	118
Volume to Capacity	0.00	0.10	0.10	0.01	0.04	0.36	0.36	0.00	0.25	0.11
Queue Length 95th (ft)	0	0	0	0	3	0	0	0	24	9
Control Delay (s)	11.4	0.0	0.0	0.0	8.2	0.0	0.0	0.0	21.1	39.4
Lane LOS	B				A				C	E
Approach Delay (s)	0.0				0.3				21.1	39.4
Approach LOS									C	E

Intersection Summary				
Average Delay		1.4		
Intersection Capacity Utilization		49.8%	ICU Level of Service	A
Analysis Period (min)		15		

Movement	EBL	EBR	NBL	NBT	SBT	SBR
Lane Configurations						
Volume (veh/h)	26	68	58	177	616	57
Sign Control	Stop			Free	Free	
Grade	0%			0%	0%	
Peak Hour Factor	0.92	0.92	0.92	0.92	0.92	0.92
Hourly flow rate (vph)	28	74	63	192	670	62
Pedestrians						
Lane Width (ft)						
Walking Speed (ft/s)						
Percent Blockage						
Right turn flare (veh)						
Median type				None	None	
Median storage veh)						
Upstream signal (ft)						
pX, platoon unblocked						
vC, conflicting volume	988	670	670			
vC1, stage 1 conf vol						
vC2, stage 2 conf vol						
vCu, unblocked vol	988	670	670			
tC, single (s)	6.4	6.2	4.1			
tC, 2 stage (s)						
tF (s)	3.5	3.3	2.2			
p0 queue free %	89	84	93			
cM capacity (veh/h)	253	457	921			

Direction, Lane #	EB 1	EB 2	NB 1	SB 1	SB 2
Volume Total	28	74	255	670	62
Volume Left	28	0	63	0	0
Volume Right	0	74	0	0	62
cSH	253	457	921	1700	1700
Volume to Capacity	0.11	0.16	0.07	0.39	0.04
Queue Length 95th (ft)	9	14	6	0	0
Control Delay (s)	21.0	14.4	2.8	0.0	0.0
Lane LOS	C	B	A		
Approach Delay (s)	16.2		2.8	0.0	
Approach LOS	C				

Intersection Summary				
Average Delay		2.2		
Intersection Capacity Utilization		58.3%	ICU Level of Service	B
Analysis Period (min)		15		

Movement	EBL	EBT	EBR	WBL	WBT	WBR	NBL	NBT	NBR	SBL	SBT	SBR
Lane Configurations												
Volume (vph)	106	299	49	136	272	109	35	149	62	77	286	73
Ideal Flow (vphpl)	1900	1900	1900	1900	1900	1900	1900	1900	1900	1900	1900	1900
Total Lost time (s)	7.0	7.0	7.0	7.0	7.0	7.0	7.0	7.0		7.0	7.0	7.0
Lane Util. Factor	1.00	1.00	1.00	1.00	1.00	1.00	1.00	0.95		1.00	0.95	1.00
Frt	1.00	1.00	0.85	1.00	1.00	0.85	1.00	0.96		1.00	1.00	0.85
Flt Protected	0.95	1.00	1.00	0.95	1.00	1.00	0.95	1.00		0.95	1.00	1.00
Satd. Flow (prot)	1770	1810	1583	1770	1863	1583	1770	3384		1770	3539	1583
Flt Permitted	0.47	1.00	1.00	0.39	1.00	1.00	0.56	1.00		0.44	1.00	1.00
Satd. Flow (perm)	881	1810	1583	728	1863	1583	1048	3384		822	3539	1583
Peak-hour factor, PHF	0.92	0.92	0.92	0.92	0.92	0.92	0.92	0.92	0.92	0.92	0.92	0.92
Adj. Flow (vph)	115	325	53	148	296	118	38	162	67	84	311	79
RTOR Reduction (vph)	0	0	38	0	0	76	0	43	0	0	0	53
Lane Group Flow (vph)	115	325	15	148	296	42	38	186	0	84	311	26
Heavy Vehicles (%)	2%	5%	2%	2%	2%	2%	2%	2%	2%	2%	2%	2%
Turn Type	pm+pt		pm+ov	pm+pt		pm+ov	pm+pt			pm+pt		pm+ov
Protected Phases	7	4	5	3	8	1	5	2		1	6	7
Permitted Phases	4		4	8		8	2			6		6
Actuated Green, G (s)	26.8	18.3	21.4	27.8	18.8	26.2	14.4	11.3		23.0	15.6	24.1
Effective Green, g (s)	26.8	18.3	21.4	27.8	18.8	26.2	14.4	11.3		23.0	15.6	24.1
Actuated g/C Ratio	0.36	0.25	0.29	0.38	0.25	0.35	0.19	0.15		0.31	0.21	0.33
Clearance Time (s)	7.0	7.0	7.0	7.0	7.0	7.0	7.0	7.0		7.0	7.0	7.0
Vehicle Extension (s)	3.0	3.0	3.0	3.0	3.0	3.0	3.0	3.0		3.0	3.0	3.0
Lane Grp Cap (vph)	421	448	608	400	473	710	234	517		350	746	665
v/s Ratio Prot	0.03	c0.18	0.00	c0.04	0.16	0.01	0.01	0.05		c0.02	c0.09	0.00
v/s Ratio Perm	0.07		0.01	0.09		0.02	0.02			0.05		0.01
v/c Ratio	0.27	0.73	0.03	0.37	0.63	0.06	0.16	0.36		0.24	0.42	0.04
Uniform Delay, d1	16.2	25.5	18.8	16.0	24.5	15.8	24.5	28.1		18.6	25.3	17.0
Progression Factor	1.00	1.00	1.00	1.00	1.00	1.00	1.00	1.00		1.00	1.00	1.00
Incremental Delay, d2	0.4	5.8	0.0	0.6	2.6	0.0	0.3	0.4		0.4	0.4	0.0
Delay (s)	16.5	31.3	18.8	16.6	27.1	15.8	24.9	28.5		18.9	25.6	17.1
Level of Service	B	C	B	B	C	B	C	C		B	C	B
Approach Delay (s)		26.5			21.9			28.0			23.0	
Approach LOS		C			C			C			C	

Intersection Summary			
HCM Average Control Delay	24.4	HCM Level of Service	C
HCM Volume to Capacity ratio	0.54		
Actuated Cycle Length (s)	74.0	Sum of lost time (s)	28.0
Intersection Capacity Utilization	57.8%	ICU Level of Service	B
Analysis Period (min)	15		

c Critical Lane Group

Movement	EBL	EBR	NBL	NBT	SBT	SBR
Lane Configurations						
Sign Control	Stop			Stop	Stop	
Volume (vph)	6	27	13	35	17	3
Peak Hour Factor	0.92	0.92	0.92	0.92	0.92	0.92
Hourly flow rate (vph)	7	29	14	38	18	3

Direction, Lane #	EB 1	EB 2	NB 1	NB 2	SB 1	SB 2
Volume Total (vph)	7	29	14	38	18	3
Volume Left (vph)	7	0	14	0	0	0
Volume Right (vph)	0	29	0	0	0	3
Hadj (s)	2.20	0.75	1.35	0.03	0.03	0.44
Departure Headway (s)	6.9	5.4	6.0	4.7	4.7	5.1
Degree Utilization, x	0.01	0.04	0.02	0.05	0.02	0.00
Capacity (veh/h)	507	647	590	756	759	692
Control Delay (s)	8.8	7.5	7.9	6.7	6.6	6.9
Approach Delay (s)	7.7		7.0		6.6	
Approach LOS	A		A		A	

Intersection Summary			
Delay	7.2		
HCM Level of Service	A		
Intersection Capacity Utilization	17.4%	ICU Level of Service	A
Analysis Period (min)	15		

Movement	EBL	EBR	NBL	NBT	SBT	SBR
Lane Configurations						
Sign Control	Stop			Stop	Stop	
Volume (vph)	33	242	120	15	28	16
Peak Hour Factor	0.92	0.92	0.92	0.92	0.92	0.92
Hourly flow rate (vph)	36	263	130	16	30	17

Direction, Lane #	EB 1	EB 2	NB 1	NB 2	SB 1	SB 2
Volume Total (vph)	36	263	130	16	30	17
Volume Left (vph)	36	0	130	0	0	0
Volume Right (vph)	0	263	0	0	0	17
Hadj (s)	0.53	-0.67	0.53	0.68	1.39	-0.67
Departure Headway (s)	5.6	4.4	5.8	6.0	6.8	4.7
Degree Utilization, x	0.06	0.32	0.21	0.03	0.06	0.02
Capacity (veh/h)	616	792	593	574	501	711
Control Delay (s)	7.7	8.2	9.1	7.9	9.0	6.6
Approach Delay (s)	8.2		9.0		8.1	
Approach LOS	A		A		A	

Intersection Summary			
Delay	8.4		
HCM Level of Service	A		
Intersection Capacity Utilization	25.0%	ICU Level of Service	A
Analysis Period (min)	15		

Movement	EBL	EBT	WBT	WBR	SBL	SBR
Lane Configurations						
Volume (veh/h)	49	83	106	173	266	58
Sign Control		Free	Free		Stop	
Grade		0%	0%		0%	
Peak Hour Factor	0.92	0.92	0.92	0.92	0.92	0.92
Hourly flow rate (vph)	53	90	115	188	289	63
Pedestrians						
Lane Width (ft)						
Walking Speed (ft/s)						
Percent Blockage						
Right turn flare (veh)						
Median type		None	None			
Median storage veh)						
Upstream signal (ft)						
pX, platoon unblocked						
vC, conflicting volume	303				406	209
vC1, stage 1 conf vol						
vC2, stage 2 conf vol						
vCu, unblocked vol	303				406	209
tC, single (s)	4.1				6.5	6.2
tC, 2 stage (s)						
tF (s)	2.2				3.6	3.3
p0 queue free %	96				49	92
cM capacity (veh/h)	1258				565	824

Direction, Lane #	EB 1	WB 1	SB 1
Volume Total	143	303	352
Volume Left	53	0	289
Volume Right	0	188	63
cSH	1258	1700	598
Volume to Capacity	0.04	0.18	0.59
Queue Length 95th (ft)	3	0	95
Control Delay (s)	3.2	0.0	19.3
Lane LOS	A		C
Approach Delay (s)	3.2	0.0	19.3
Approach LOS			C

Intersection Summary			
Average Delay	9.1		
Intersection Capacity Utilization	51.5%	ICU Level of Service	A
Analysis Period (min)	15		

Movement	EBL	EBT	EBR	WBL	WBT	WBR	NBL	NBT	NBR	SBL	SBT	SBR
Lane Configurations												
Volume (veh/h)	10	872	42	55	384	12	26	8	52	4	1	0
Sign Control		Free			Free			Stop			Stop	
Grade		0%			0%			0%			0%	
Peak Hour Factor	0.92	0.92	0.92	0.92	0.92	0.92	0.92	0.92	0.92	0.92	0.92	0.92
Hourly flow rate (vph)	11	948	46	60	417	13	28	9	57	4	1	0
Pedestrians												
Lane Width (ft)												
Walking Speed (ft/s)												
Percent Blockage												
Right turn flare (veh)												
Median type		None			None							
Median storage veh)												
Upstream signal (ft)												
pX, platoon unblocked												
vC, conflicting volume	430			993			1298	1520	474	1093	1552	209
vC1, stage 1 conf vol												
vC2, stage 2 conf vol												
vCu, unblocked vol	430			993			1298	1520	474	1093	1552	209
tC, single (s)	4.1			4.2			7.6	6.5	6.9	7.5	6.5	6.9
tC, 2 stage (s)												
tF (s)	2.2			2.2			3.5	4.0	3.3	3.5	4.0	3.3
p0 queue free %	99			91			74	92	89	97	99	100
cM capacity (veh/h)	1125			680			107	106	537	131	102	797

Direction, Lane #	EB 1	EB 2	EB 3	EB 4	WB 1	WB 2	WB 3	WB 4	NB 1	SB 1
Volume Total	11	474	474	46	60	209	209	13	93	5
Volume Left	11	0	0	0	60	0	0	0	28	4
Volume Right	0	0	0	46	0	0	0	13	57	0
cSH	1125	1700	1700	1700	680	1700	1700	1700	208	124
Volume to Capacity	0.01	0.28	0.28	0.03	0.09	0.12	0.12	0.01	0.45	0.04
Queue Length 95th (ft)	1	0	0	0	7	0	0	0	53	3
Control Delay (s)	8.2	0.0	0.0	0.0	10.8	0.0	0.0	0.0	35.8	35.4
Lane LOS	A				B				E	E
Approach Delay (s)	0.1				1.3				35.8	35.4
Approach LOS									E	E

Intersection Summary				
Average Delay		2.7		
Intersection Capacity Utilization		42.3%	ICU Level of Service	A
Analysis Period (min)		15		

Movement	EBL	EBR	NBL	NBT	SBT	SBR
Lane Configurations						
Volume (veh/h)	35	67	43	312	325	29
Sign Control	Stop			Free	Free	
Grade	0%			0%	0%	
Peak Hour Factor	0.92	0.92	0.92	0.92	0.92	0.92
Hourly flow rate (vph)	38	73	47	339	353	32
Pedestrians						
Lane Width (ft)						
Walking Speed (ft/s)						
Percent Blockage						
Right turn flare (veh)						
Median type				None	None	
Median storage veh)						
Upstream signal (ft)						
pX, platoon unblocked						
vC, conflicting volume	786	353	353			
vC1, stage 1 conf vol						
vC2, stage 2 conf vol						
vCu, unblocked vol	786	353	353			
tC, single (s)	6.4	6.2	4.1			
tC, 2 stage (s)						
tF (s)	3.5	3.3	2.2			
p0 queue free %	89	89	96			
cM capacity (veh/h)	347	690	1205			

Direction, Lane #	EB 1	EB 2	NB 1	SB 1	SB 2
Volume Total	38	73	386	353	32
Volume Left	38	0	47	0	0
Volume Right	0	73	0	0	32
cSH	347	690	1205	1700	1700
Volume to Capacity	0.11	0.11	0.04	0.21	0.02
Queue Length 95th (ft)	9	9	3	0	0
Control Delay (s)	16.6	10.8	1.3	0.0	0.0
Lane LOS	C	B	A		
Approach Delay (s)	12.8		1.3	0.0	
Approach LOS	B				

Intersection Summary				
Average Delay		2.2		
Intersection Capacity Utilization		49.2%	ICU Level of Service	A
Analysis Period (min)		15		

HCM Signalized Intersection Capacity Analysis
300: Braddock Road & Gum Spring Road

LCPS (HS 7)
2012 Total Future

Movement	EBL	EBT	EBR	WBL	WBT	WBR	NBL	NBT	NBR	SBL	SBT	SBR
Lane Configurations												
Volume (vph)	122	577	43	87	438	206	34	248	112	275	165	67
Ideal Flow (vphpl)	1900	1900	1900	1900	1900	1900	1900	1900	1900	1900	1900	1900
Total Lost time (s)	7.0	7.0	7.0	7.0	7.0	7.0	7.0	7.0		7.0	7.0	7.0
Lane Util. Factor	1.00	1.00	1.00	1.00	1.00	1.00	1.00	0.95		1.00	0.95	1.00
Frt	1.00	1.00	0.85	1.00	1.00	0.85	1.00	0.95		1.00	1.00	0.85
Flt Protected	0.95	1.00	1.00	0.95	1.00	1.00	0.95	1.00		0.95	1.00	1.00
Satd. Flow (prot)	1770	1845	1583	1770	1863	1583	1770	3374		1770	3539	1583
Flt Permitted	0.25	1.00	1.00	0.13	1.00	1.00	0.64	1.00		0.28	1.00	1.00
Satd. Flow (perm)	468	1845	1583	249	1863	1583	1190	3374		525	3539	1583
Peak-hour factor, PHF	0.92	0.92	0.92	0.92	0.92	0.92	0.92	0.92	0.92	0.92	0.92	0.92
Adj. Flow (vph)	133	627	47	95	476	224	37	270	122	299	179	73
RTOR Reduction (vph)	0	0	28	0	0	85	0	47	0	0	0	48
Lane Group Flow (vph)	133	627	19	95	476	139	37	345	0	299	179	25
Heavy Vehicles (%)	2%	3%	2%	2%	2%	2%	2%	2%	2%	2%	2%	2%
Turn Type	pm+pt		pm+ov	pm+pt		pm+ov	pm+pt			pm+pt		pm+ov
Protected Phases	7	4	5	3	8	1	5	2		1	6	7
Permitted Phases	4		4	8		8	2			6		6
Actuated Green, G (s)	43.8	38.7	41.7	39.6	36.6	52.5	20.2	17.2		40.1	30.1	35.2
Effective Green, g (s)	43.8	38.7	41.7	39.6	36.6	52.5	20.2	17.2		40.1	30.1	35.2
Actuated g/C Ratio	0.43	0.38	0.41	0.39	0.36	0.51	0.20	0.17		0.39	0.29	0.34
Clearance Time (s)	7.0	7.0	7.0	7.0	7.0	7.0	7.0	7.0		7.0	7.0	7.0
Vehicle Extension (s)	3.0	3.0	3.0	3.0	3.0	3.0	3.0	3.0		3.0	3.0	3.0
Lane Grp Cap (vph)	264	695	750	140	663	916	251	565		397	1036	650
v/s Ratio Prot	c0.02	c0.34	0.00	0.02	0.26	0.02	0.00	0.10		c0.12	0.05	0.00
v/s Ratio Perm	0.19		0.01	0.24		0.06	0.02			c0.18		0.01
v/c Ratio	0.50	0.90	0.03	0.68	0.72	0.15	0.15	0.61		0.75	0.17	0.04
Uniform Delay, d1	20.3	30.3	18.3	26.9	28.6	13.3	33.9	39.7		23.9	27.1	22.5
Progression Factor	1.00	1.00	1.00	1.00	1.00	1.00	1.00	1.00		1.00	1.00	1.00
Incremental Delay, d2	1.5	15.0	0.0	12.3	3.7	0.1	0.3	1.9		7.9	0.1	0.0
Delay (s)	21.9	45.2	18.4	39.2	32.4	13.4	34.2	41.6		31.8	27.2	22.5
Level of Service	C	D	B	D	C	B	C	D		C	C	C
Approach Delay (s)		39.8			27.8			40.9			29.0	
Approach LOS		D			C			D			C	

Intersection Summary			
HCM Average Control Delay	34.0	HCM Level of Service	C
HCM Volume to Capacity ratio	0.74		
Actuated Cycle Length (s)	102.8	Sum of lost time (s)	14.0
Intersection Capacity Utilization	84.2%	ICU Level of Service	E
Analysis Period (min)	15		

c Critical Lane Group

HCM Unsignalized Intersection Capacity Analysis
600: Road A & North Star Blvd.

LCPS (HS 7)
2012 Total Future

Movement	EBL	EBR	NBL	NBT	SBT	SBR
Lane Configurations						
Sign Control	Stop			Stop	Stop	
Volume (vph)	4	19	40	26	52	9
Peak Hour Factor	0.92	0.92	0.92	0.92	0.92	0.92
Hourly flow rate (vph)	4	21	43	28	57	10

Direction, Lane #	EB 1	EB 2	NB 1	NB 2	SB 1	SB 2
Volume Total (vph)	4	21	43	28	57	10
Volume Left (vph)	4	0	43	0	0	0
Volume Right (vph)	0	21	0	0	0	10
Hadj (s)	1.35	-0.16	1.49	0.03	0.03	0.63
Departure Headway (s)	6.2	4.7	6.1	4.6	4.7	5.3
Degree Utilization, x	0.01	0.03	0.07	0.04	0.07	0.01
Capacity (veh/h)	557	738	579	759	765	672
Control Delay (s)	8.0	6.6	8.4	6.6	6.8	7.1
Approach Delay (s)	6.9		7.7		6.9	
Approach LOS	A		A		A	

Intersection Summary			
Delay	7.2		
HCM Level of Service	A		
Intersection Capacity Utilization	18.9%	ICU Level of Service	A
Analysis Period (min)	15		

Movement	EBL	EBR	NBL	NBT	SBT	SBR
Lane Configurations						
Sign Control	Stop			Stop	Stop	
Volume (vph)	23	167	357	43	22	49
Peak Hour Factor	0.92	0.92	0.92	0.92	0.92	0.92
Hourly flow rate (vph)	25	182	388	47	24	53

Direction, Lane #	EB 1	EB 2	NB 1	NB 2	SB 1	SB 2
Volume Total (vph)	25	182	388	47	24	53
Volume Left (vph)	25	0	388	0	0	0
Volume Right (vph)	0	182	0	0	0	53
Hadj (s)	0.53	-0.67	0.53	0.90	0.46	-0.67
Departure Headway (s)	6.4	5.2	5.7	6.1	6.0	4.9
Degree Utilization, x	0.04	0.26	0.61	0.08	0.04	0.07
Capacity (veh/h)	526	648	612	574	562	690
Control Delay (s)	8.5	8.8	16.1	8.4	8.1	7.1
Approach Delay (s)	8.8		15.3		7.4	
Approach LOS	A		C		A	

Intersection Summary			
Delay	12.6		
HCM Level of Service	B		
Intersection Capacity Utilization	36.4%	ICU Level of Service	A
Analysis Period (min)	15		

Movement	EBL	EBT	WBT	WBR	SBL	SBR
Lane Configurations						
Volume (veh/h)	71	203	171	368	224	57
Sign Control		Free	Free		Stop	
Grade		0%	0%		0%	
Peak Hour Factor	0.92	0.92	0.92	0.92	0.92	0.92
Hourly flow rate (vph)	77	221	186	400	243	62
Pedestrians						
Lane Width (ft)						
Walking Speed (ft/s)						
Percent Blockage						
Right turn flare (veh)						12
Median type		None	None			
Median storage veh)						
Upstream signal (ft)						
pX, platoon unblocked						
vC, conflicting volume	586				561	186
vC1, stage 1 conf vol						
vC2, stage 2 conf vol						
vCu, unblocked vol	586				561	186
tC, single (s)	4.1				6.4	6.2
tC, 2 stage (s)						
tF (s)	2.2				3.5	3.3
p0 queue free %	92				46	93
cM capacity (veh/h)	979				450	856

Direction, Lane #	EB 1	WB 1	WB 2	SB 1
Volume Total	298	186	400	305
Volume Left	77	0	0	243
Volume Right	0	0	400	62
cSH	979	1700	1700	565
Volume to Capacity	0.08	0.11	0.24	0.54
Queue Length 95th (ft)	6	0	0	80
Control Delay (s)	2.9	0.0	0.0	19.5
Lane LOS	A			C
Approach Delay (s)	2.9	0.0		19.5
Approach LOS				C

Intersection Summary			
Average Delay	5.7		
Intersection Capacity Utilization	46.0%	ICU Level of Service	A
Analysis Period (min)	15		

Movement	EBL	EBT	EBR	WBL	WBT	WBR	NBL	NBT	NBR	SBL	SBT	SBR
Lane Configurations												
Volume (veh/h)	1	325	22	39	1129	4	26	1	42	1	7	4
Sign Control		Free			Free			Stop			Stop	
Grade		0%			0%			0%			0%	
Peak Hour Factor	0.92	0.92	0.92	0.92	0.92	0.92	0.92	0.92	0.92	0.92	0.92	0.92
Hourly flow rate (vph)	1	353	24	42	1227	4	28	1	46	1	8	4
Pedestrians												
Lane Width (ft)												
Walking Speed (ft/s)												
Percent Blockage												
Right turn flare (veh)												
Median type		None			None							
Median storage veh)												
Upstream signal (ft)												
pX, platoon unblocked												
vC, conflicting volume	1232			377			1062	1672	177	1537	1691	614
vC1, stage 1 conf vol												
vC2, stage 2 conf vol												
vCu, unblocked vol	1232			377			1062	1672	177	1537	1691	614
tC, single (s)	4.1			4.2			7.7	6.5	7.0	7.5	6.5	6.9
tC, 2 stage (s)												
tF (s)	2.2			2.2			3.6	4.0	3.3	3.5	4.0	3.3
p0 queue free %	100			96			81	99	94	98	91	99
cM capacity (veh/h)	562			1171			153	91	827	72	89	435

Direction, Lane #	EB 1	EB 2	EB 3	EB 4	WB 1	WB 2	WB 3	WB 4	NB 1	SB 1
Volume Total	1	177	177	24	42	614	614	4	75	13
Volume Left	1	0	0	0	42	0	0	0	28	1
Volume Right	0	0	0	24	0	0	0	4	46	4
cSH	562	1700	1700	1700	1171	1700	1700	1700	297	118
Volume to Capacity	0.00	0.10	0.10	0.01	0.04	0.36	0.36	0.00	0.25	0.11
Queue Length 95th (ft)	0	0	0	0	3	0	0	0	24	9
Control Delay (s)	11.4	0.0	0.0	0.0	8.2	0.0	0.0	0.0	21.1	39.4
Lane LOS	B				A				C	E
Approach Delay (s)	0.0				0.3				21.1	39.4
Approach LOS									C	E

Intersection Summary				
Average Delay		1.4		
Intersection Capacity Utilization		49.8%	ICU Level of Service	A
Analysis Period (min)		15		

Movement	EBL	EBR	NBL	NBT	SBT	SBR
Lane Configurations						
Volume (veh/h)	26	68	58	177	616	57
Sign Control	Stop			Free	Free	
Grade	0%			0%	0%	
Peak Hour Factor	0.92	0.92	0.92	0.92	0.92	0.92
Hourly flow rate (vph)	28	74	63	192	670	62
Pedestrians						
Lane Width (ft)						
Walking Speed (ft/s)						
Percent Blockage						
Right turn flare (veh)						
Median type				None	None	
Median storage veh)						
Upstream signal (ft)						
pX, platoon unblocked						
vC, conflicting volume	988	670	670			
vC1, stage 1 conf vol						
vC2, stage 2 conf vol						
vCu, unblocked vol	988	670	670			
tC, single (s)	6.4	6.2	4.1			
tC, 2 stage (s)						
tF (s)	3.5	3.3	2.2			
p0 queue free %	89	84	93			
cM capacity (veh/h)	253	457	921			

Direction, Lane #	EB 1	EB 2	NB 1	SB 1	SB 2
Volume Total	28	74	255	670	62
Volume Left	28	0	63	0	0
Volume Right	0	74	0	0	62
cSH	253	457	921	1700	1700
Volume to Capacity	0.11	0.16	0.07	0.39	0.04
Queue Length 95th (ft)	9	14	6	0	0
Control Delay (s)	21.0	14.4	2.8	0.0	0.0
Lane LOS	C	B	A		
Approach Delay (s)	16.2		2.8	0.0	
Approach LOS	C				

Intersection Summary				
Average Delay		2.2		
Intersection Capacity Utilization		58.3%	ICU Level of Service	B
Analysis Period (min)		15		

HCM Signalized Intersection Capacity Analysis
300: Braddock Road & Gum Spring Road

LCPS (HS 7)
2012 Total Future

Movement	EBL	EBT	EBR	WBL	WBT	WBR	NBL	NBT	NBR	SBL	SBT	SBR
Lane Configurations												
Volume (vph)	106	299	49	136	272	109	35	149	62	77	286	73
Ideal Flow (vphpl)	1900	1900	1900	1900	1900	1900	1900	1900	1900	1900	1900	1900
Total Lost time (s)	7.0	7.0	7.0	7.0	7.0	7.0	7.0	7.0		7.0	7.0	7.0
Lane Util. Factor	1.00	1.00	1.00	1.00	1.00	1.00	1.00	0.95		1.00	0.95	1.00
Frt	1.00	1.00	0.85	1.00	1.00	0.85	1.00	0.96		1.00	1.00	0.85
Flt Protected	0.95	1.00	1.00	0.95	1.00	1.00	0.95	1.00		0.95	1.00	1.00
Satd. Flow (prot)	1770	1810	1583	1770	1863	1583	1770	3384		1770	3539	1583
Flt Permitted	0.47	1.00	1.00	0.39	1.00	1.00	0.56	1.00		0.44	1.00	1.00
Satd. Flow (perm)	881	1810	1583	728	1863	1583	1048	3384		822	3539	1583
Peak-hour factor, PHF	0.92	0.92	0.92	0.92	0.92	0.92	0.92	0.92	0.92	0.92	0.92	0.92
Adj. Flow (vph)	115	325	53	148	296	118	38	162	67	84	311	79
RTOR Reduction (vph)	0	0	38	0	0	76	0	43	0	0	0	53
Lane Group Flow (vph)	115	325	15	148	296	42	38	186	0	84	311	26
Heavy Vehicles (%)	2%	5%	2%	2%	2%	2%	2%	2%	2%	2%	2%	2%
Turn Type	pm+pt		pm+ov	pm+pt		pm+ov	pm+pt			pm+pt		pm+ov
Protected Phases	7	4	5	3	8	1	5	2		1	6	7
Permitted Phases	4		4	8		8	2			6		6
Actuated Green, G (s)	26.8	18.3	21.4	27.8	18.8	26.2	14.4	11.3		23.0	15.6	24.1
Effective Green, g (s)	26.8	18.3	21.4	27.8	18.8	26.2	14.4	11.3		23.0	15.6	24.1
Actuated g/C Ratio	0.36	0.25	0.29	0.38	0.25	0.35	0.19	0.15		0.31	0.21	0.33
Clearance Time (s)	7.0	7.0	7.0	7.0	7.0	7.0	7.0	7.0		7.0	7.0	7.0
Vehicle Extension (s)	3.0	3.0	3.0	3.0	3.0	3.0	3.0	3.0		3.0	3.0	3.0
Lane Grp Cap (vph)	421	448	608	400	473	710	234	517		350	746	665
v/s Ratio Prot	0.03	c0.18	0.00	c0.04	0.16	0.01	0.01	0.05		c0.02	c0.09	0.00
v/s Ratio Perm	0.07		0.01	0.09		0.02	0.02			0.05		0.01
v/c Ratio	0.27	0.73	0.03	0.37	0.63	0.06	0.16	0.36		0.24	0.42	0.04
Uniform Delay, d1	16.2	25.5	18.8	16.0	24.5	15.8	24.5	28.1		18.6	25.3	17.0
Progression Factor	1.00	1.00	1.00	1.00	1.00	1.00	1.00	1.00		1.00	1.00	1.00
Incremental Delay, d2	0.4	5.8	0.0	0.6	2.6	0.0	0.3	0.4		0.4	0.4	0.0
Delay (s)	16.5	31.3	18.8	16.6	27.1	15.8	24.9	28.5		18.9	25.6	17.1
Level of Service	B	C	B	B	C	B	C	C		B	C	B
Approach Delay (s)		26.5			21.9			28.0			23.0	
Approach LOS		C			C			C			C	

Intersection Summary			
HCM Average Control Delay	24.4	HCM Level of Service	C
HCM Volume to Capacity ratio	0.54		
Actuated Cycle Length (s)	74.0	Sum of lost time (s)	28.0
Intersection Capacity Utilization	57.8%	ICU Level of Service	B
Analysis Period (min)	15		

c Critical Lane Group

HCM Unsignalized Intersection Capacity Analysis
600: Road A & North Star Blvd.

LCPS (HS 7)
2012 Total Future

Movement	EBL	EBR	NBL	NBT	SBT	SBR
Lane Configurations						
Sign Control	Stop			Stop	Stop	
Volume (vph)	6	27	13	35	17	3
Peak Hour Factor	0.92	0.92	0.92	0.92	0.92	0.92
Hourly flow rate (vph)	7	29	14	38	18	3

Direction, Lane #	EB 1	EB 2	NB 1	NB 2	SB 1	SB 2
Volume Total (vph)	7	29	14	38	18	3
Volume Left (vph)	7	0	14	0	0	0
Volume Right (vph)	0	29	0	0	0	3
Hadj (s)	2.20	0.75	1.35	0.03	0.03	0.44
Departure Headway (s)	6.9	5.4	6.0	4.7	4.7	5.1
Degree Utilization, x	0.01	0.04	0.02	0.05	0.02	0.00
Capacity (veh/h)	507	647	590	756	759	692
Control Delay (s)	8.8	7.5	7.9	6.7	6.6	6.9
Approach Delay (s)	7.7		7.0		6.6	
Approach LOS	A		A		A	

Intersection Summary			
Delay	7.2		
HCM Level of Service	A		
Intersection Capacity Utilization	17.4%	ICU Level of Service	A
Analysis Period (min)	15		

Movement	EBL	EBR	NBL	NBT	SBT	SBR
Lane Configurations						
Sign Control	Stop			Stop	Stop	
Volume (vph)	33	242	120	15	28	16
Peak Hour Factor	0.92	0.92	0.92	0.92	0.92	0.92
Hourly flow rate (vph)	36	263	130	16	30	17

Direction, Lane #	EB 1	EB 2	NB 1	NB 2	SB 1	SB 2
Volume Total (vph)	36	263	130	16	30	17
Volume Left (vph)	36	0	130	0	0	0
Volume Right (vph)	0	263	0	0	0	17
Hadj (s)	0.53	-0.67	0.53	0.68	1.39	-0.67
Departure Headway (s)	5.6	4.4	5.8	6.0	6.8	4.7
Degree Utilization, x	0.06	0.32	0.21	0.03	0.06	0.02
Capacity (veh/h)	616	792	593	574	501	711
Control Delay (s)	7.7	8.2	9.1	7.9	9.0	6.6
Approach Delay (s)	8.2		9.0		8.1	
Approach LOS	A		A		A	

Intersection Summary			
Delay	8.4		
HCM Level of Service	A		
Intersection Capacity Utilization	25.0%	ICU Level of Service	A
Analysis Period (min)	15		

Movement	EBL	EBT	WBT	WBR	SBL	SBR
Lane Configurations						
Volume (veh/h)	49	83	106	173	266	58
Sign Control		Free	Free		Stop	
Grade		0%	0%		0%	
Peak Hour Factor	0.92	0.92	0.92	0.92	0.92	0.92
Hourly flow rate (vph)	53	90	115	188	289	63
Pedestrians						
Lane Width (ft)						
Walking Speed (ft/s)						
Percent Blockage						
Right turn flare (veh)						12
Median type		None	None			
Median storage veh)						
Upstream signal (ft)						
pX, platoon unblocked						
vC, conflicting volume	303				312	115
vC1, stage 1 conf vol						
vC2, stage 2 conf vol						
vCu, unblocked vol	303				312	115
tC, single (s)	4.1				6.5	6.2
tC, 2 stage (s)						
tF (s)	2.2				3.6	3.3
p0 queue free %	96				55	93
cM capacity (veh/h)	1258				640	929

Direction, Lane #	EB 1	WB 1	WB 2	SB 1
Volume Total	143	115	188	352
Volume Left	53	0	0	289
Volume Right	0	0	188	63
cSH	1258	1700	1700	780
Volume to Capacity	0.04	0.07	0.11	0.45
Queue Length 95th (ft)	3	0	0	59
Control Delay (s)	3.2	0.0	0.0	14.1
Lane LOS	A			B
Approach Delay (s)	3.2	0.0		14.1
Approach LOS				B

Intersection Summary			
Average Delay	6.8		
Intersection Capacity Utilization	35.1%	ICU Level of Service	A
Analysis Period (min)	15		

APPENDIX J

APPROVED DEVELOPMENT TRIP GENERATION AND SITE VOLUMES (2015)

Table 1: 2015 FUTURE BACKGROUND TRIP GENERATION WORKSHEET

Land Use	ITE Code	Size	------ Weekday ------ AM Peak Hour In	AM Peak Hour Out	AM Peak Hour Total	PM Peak Hour In	PM Peak Hour Out	PM Peak Hour Total	Daily Total
Westport By-Right Property									
Single-Family Detached Housing	210	345 DU	63	188	251	207	120	327	3,249
Lenah Property									
Single-Family Detached Housing	210	132 DU	26	76	102	87	51	138	2,555
Stone Ridge									
Residential		516 DU	12	88	100	73	38	111	2,622
Retail/Ancellary Use		58,910 SF	251	200	452	116	120	236	2,590
Subtotal Stone Ridge Trips			263	289	552	189	158	347	5,212
Marrwood Property									
Single-Family Detached Housing	210	73 DU	15	46	61	52	29	81	779
C.D. Smith									
Single-Family Detached Housing	210	77 DU	16	47	63	54	30	84	765
Residential Condominium/Townhouse	230	107 DU	9	46	55	43	21	64	931
Subtotal C.D.Smith Trips		184 DU	25	92	117	97	51	148	1,696
Kirkpatrick Farms									
Single-Family Detached Housing	210	202 DU	38	113	151	128	74	202	1,986
Residential Condominium/Townhouse	220	27 DU	4	15	19	15	6	21	211
Subtotal Kirkpatrick Farms Trips		229 DU	42	128	170	143	80	223	2,197
Kirkpatrick Farms West									
Single-Family Detached Housing	210	95 DU	19	57	76	65	37	102	945
Single-Family Attached Housing	230	92 DU	8	40	48	38	18	56	800
Subtotal Kirkpatrick Farms West Trips		187 DU	27	97	124	103	55	158	1,745
Braddock Corner									
Single-Family Detached Housing	210	15 DU	5	15	20	13	7	20	182
Single-Family Attached Housing	230	31 DU	4	17	21	17	7	24	238
Subtotal Braddock Corner Trips		46	9	32	41	30	14	44	420
Greenfields Property									
Single-Family Detached Housing	210	290 DU	54	159	213	177	103	280	2,770
Gum Spring Village Center									
Subtotal Gum Spring Village Center Trips			158	132	291	327	325	652	6,118
Providence Glen									
Single-Family Detached Housing	210	20 DU	6	17	23	16	9	25	200
Single-Family Attached Housing	230	59 DU	6	28	34	26	13	39	513
Subtotal Providence Glen Trips		79	12	45	57	42	22	64	713
Braddock Crossing									
Single-Family Detached Housing	210	25 DU	7	20	27	20	11	31	291
Single-Family Attached Housing	230	58 DU	6	28	34	26	13	39	404
Subtotal Braddock Crossing Trips		83	13	48	61	46	24	70	695
Loudoun County Public School MS 5									
Middle School	522	1,350 Students	401	328	729	106	110	216	2,187
TOTAL FUTURE BACKGROUND TRIPS			**1,108**	**1,660**	**2,769**	**1,606**	**1,142**	**2,748**	**30,336**

2015 FB AM — **Braddock Road and Gum Spring Road**

	NB			SB			EB			WB		
	L	T	R	L	T	R	L	T	R	L	T	R
LCPS MS-5				28				100			82	23
Westport By-Right	0	0	0	0	0	8	24	22	0	0	7	0
Lenah Property	0	0	0	0	0	2	5	16	0	0	5	0
Braddock Crossing	0	0	0	0	0	1	3	9	0	0	4	0
Stoneridge Residential	0	0	0	2	3	2	0	0	0	0	0	0
Stoneridge Retail/Ancellary Uses	0	6	0	7	5	3	4	0	0	0	0	8
Marrwood Property	0	0	0	0	0	0	1	5	0	0	2	0
C.D.Smith	2	0	0	0	0	4	16	39	6	0	11	0
Kirkpatrick Farms	2	0	0	0	0	1	4	10	6	0	3	0
Kirkpatrick Farms West	0	0	0	0	0	3	13	22	1	0	6	0
Braddock Corner	0	2	0	12	9	7	2	0	0	0	0	3
Providence Glen	0	1	0	11	5	7	2	0	0	0	0	3
Gum Spring Village Center	0	7	0	1	6	2	2	0	0	0	0	1
Greenfields Property	1	0	0	0	0	4	10	25	3	0	9	0
Arcola Center	0	22	0	17	9	5	11	0	0	0	0	40
Total Trips (Commuter Peak)	**5**	**38**	**0**	**50**	**37**	**48**	**98**	**148**	**16**	**0**	**47**	**56**
Total Trips (ES Peak)	**5**	**36**	**0**	**48**	**35**	**46**	**93**	**141**	**15**	**0**	**45**	**53**
Total Trips (HS Peak)	**5**	**38**	**0**	**78**	**37**	**48**	**98**	**248**	**16**	**0**	**129**	**79**

2015 FB AM — **Braddock Road and Goshen Road**

	NB			SB			EB			WB		
	L	T	R	L	T	R	L	T	R	L	T	R
LCPS MS-5								100			82	
Westport By-Right	0	0	0	0	0	0	0	55	0	0	18	0
Lenah Property	0	0	0	0	0	0	0	28	0	0	18	0
Braddock Crossing	0	0	0	0	0	0	0	19	0	0	12	0
Stoneridge Residential	0	0	0	0	0	0	0	0	0	0	2	0
Stoneridge Retail/Ancellary Uses	0	0	0	0	0	0	0	4	0	0	3	0
Marrwood Property	0	0	0	0	0	0	0	11	0	0	4	0
C.D.Smith	0	0	0	0	0	0	0	6	0	0	22	0
Kirkpatrick Farms	0	0	0	0	0	0	0	1	0	0	5	0
Kirkpatrick Farms West	0	0	0	0	0	0	0	5	0	0	18	0
Braddock Corner	0	0	0	0	0	0	0	1	0	0	6	0
Providence Glen	0	0	0	0	0	0	0	1	0	0	4	0
Gum Spring Village Center	0	0	0	0	0	0	0	2	0	0	2	0
Greenfields Property	0	0	0	0	0	0	0	21	0	0	9	0
Arcola Center	0	0	0	0	0	0	0	11	0	0	5	0
Total Trips (Commuter Peak)	**0**	**0**	**0**	**0**	**0**	**0**	**0**	**165**	**0**	**0**	**128**	**0**
Total Trips (ES Peak)	**0**	**0**	**0**	**0**	**0**	**0**	**0**	**157**	**0**	**0**	**121**	**0**
Total Trips (HS Peak)	**0**	**0**	**0**	**0**	**0**	**0**	**0**	**265**	**0**	**0**	**210**	**0**

2015 FB AM — **Route 50 and Goshen Road**

	NB			SB			EB			WB		
	L	T	R	L	T	R	L	T	R	L	T	R
LCPS MS-5												
Westport By-Right	24	0	12	0	0	0	0	2	8	24	6	0
Lenah Property	0	0	0	0	0	0	0	17	0	0	6	0
Braddock Crossing	0	0	0	0	0	0	0	12	0	0	4	0
Stoneridge Residential	0	0	0	0	0	0	0	0	0	0	2	0
Stoneridge Retail/Ancellary Uses	0	0	0	0	0	0	0	6	0	0	4	0
Marrwood Property	7	0	11	0	0	0	0	0	2	4	0	0
C.D.Smith	0	0	0	0	0	0	0	0	0	0	1	0
Kirkpatrick Farms	0	0	0	0	0	0	0	0	0	0	0	0
Kirkpatrick Farms West	0	0	0	0	0	0	0	0	0	0	0	0
Braddock Corner	0	0	0	0	0	0	0	0	0	0	1	0
Providence Glen	0	0	0	0	0	0	0	1	0	0	3	0
Gum Spring Village Center	0	0	0	0	0	0	0	3	0	0	3	0
Greenfields Property	0	0	0	0	0	0	0	1	0	0	0	0
Arcola Center	0	0	0	0	0	0	0	60	0	0	25	0
Total Trips (Commuter Peak)	**31**	**0**	**23**	**0**	**0**	**0**	**0**	**103**	**10**	**28**	**57**	**0**
Total Trips (ES Peak)	**29**	**0**	**22**	**0**	**0**	**0**	**0**	**98**	**9**	**26**	**54**	**0**
Total Trips (HS Peak)	**31**	**0**	**23**	**0**	**0**	**0**	**0**	**103**	**10**	**28**	**57**	**0**

2015 FB AM — **Braddock Rd and North Star Blvd. (Rel Rt.659)**

	NB			SB			EB			WB		
	L	T	R	L	T	R	L	T	R	L	T	R
LCPS MS-5								100			82	
Westport By-Right	0	0	0	0	0	0	0	46	0	0	15	0
Lenah Property	0	0	0	0	0	0	0	21	0	0	7	0
Braddock Crossing								14			5	
Stoneridge Residential	0	0	0	0	0	0	0	0	0	0	2	0
Stoneridge Retail/Ancellary Uses	0	0	0	0	0	0	0	4	0	0	3	0
Marrwood Property	0	0	0	0	0	0	0	6	0	0	2	0
C.D.Smith	0	0	0	60	0	32	9	0	0	0	0	16
Kirkpatrick Farms	0	0	0	0	0	0	0	1	0	0	5	0
Kirkpatrick Farms West	0	0	0	0	0	0	0	5	0	0	18	0
Braddock Corner	0	0	0	0	0	0	0	1	0	0	7	0
Providence Glen	0	0	0	0	0	0	0	2	0	0	4	0
Gum Spring Village Center	0	0	0	0	0	0	0	2	0	0	2	0
Greenfields Property	0	0	0	0	0	0	0	38	0	0	13	0
Arcola Center	0	0	0	0	0	0	0	11	0	0	5	0
Total Trips (Commuter Peak)	**0**	**0**	**0**	**60**	**0**	**33**	**9**	**153**	**0**	**0**	**89**	**16**
Total Trips (ES Peak)	**0**	**0**	**0**	**57**	**0**	**31**	**9**	**145**	**0**	**0**	**84**	**15**
Total Trips (HS Peak)	**0**	**0**	**0**	**60**	**0**	**33**	**9**	**253**	**0**	**0**	**171**	**16**

2015 FB AM — **Gum Spring and Tall Cedars Pkwy**

	NB			SB			EB			WB		
	L	T	R	L	T	R	L	T	R	L	T	R
LCPS MS-5		23			28							
Westport By-Right	0	24	0	0	8	0	0	0	0	0	0	0
Lenah Property	0	5	0	0	2	0	0	0	0	0	0	0
Braddock Crossing		3			1							
Stoneridge Residential	1	0	0	0	0	0	3	0	7	0	0	0
Stoneridge Retail/Ancellary Uses	13	0	0	0	0	15	12	0	15	0	0	0
Marrwood Property	0	1	0	0	0	0	0	0	0	0	0	0
C.D.Smith	0	13	0	0	4	0	0	0	0	0	0	0
Kirkpatrick Farms	0	4	0	0	1	0	0	0	0	0	0	0
Kirkpatrick Farms West	0	13	0	0	3	0	0	0	0	0	0	0
Braddock Corner	0	8	0	0	2	0	0	0	0	0	0	0
Providence Glen	0	15	0	0	4	0	0	0	0	0	0	0
Gum Spring Village Center	0	4	0	0	9	0	0	0	0	0	0	0
Greenfields Property	0	10	0	0	4	0	0	0	0	0	0	0
Arcola Center	0	72	0	0	31	0	0	0	0	0	0	0
Total Trips (Commuter Peak)	**14**	**172**	**0**	**0**	**68**	**15**	**15**	**0**	**22**	**0**	**0**	**0**
Total Trips (ES Peak)	**13**	**163**	**0**	**0**	**65**	**14**	**14**	**0**	**21**	**0**	**0**	**0**
Total Trips (HS Peak)	**14**	**195**	**0**	**0**	**96**	**15**	**15**	**0**	**22**	**0**	**0**	**0**

2015 FB PM **Braddock Road and Gum Spring Road**

	NB			SB			EB			WB		
	L	T	R	L	T	R	L	T	R	L	T	R
LCPS MS-5				13				47			58	16
Westport By-Right	0	0	0	0	0	25	14	13	0	0	23	0
Lenah Property	0	0	0	0	0	6	3	10	0	0	19	0
Braddock Crossing	0	0	0	0	0	4	2	7	0	0	13	0
Stoneridge Residential	0	2	0	1	1	1	2	0	0	0	0	2
Stoneridge Retail/Ancellary Uses	0	3	0	4	3	4	2	0	0	0	0	4
Marrwood Property	0	0	0	0	0	1	1	3	0	0	6	0
C.D.Smith	6	0	0	0	0	16	9	21	3	0	41	0
Kirkpatrick Farms	6	0	0	0	0	4	2	6	3	0	10	0
Kirkpatrick Farms West	2	0	0	0	0	13	7	13	1	0	24	0
Braddock Corner	0	10	0	7	5	4	7	0	0	0	0	14
Providence Glen	0	4	0	5	2	3	6	0	0	0	0	11
Gum Spring Village Center	0	15	0	3	15	5	5	0	0	0	0	3
Greenfields Property	4	0	0	0	0	12	7	16	2	0	30	0
Arcola Center	0	20	0	55	30	15	10	0	0	0	0	36
Total Trips (Commuter Peak)	**17**	**53**	**0**	**75**	**56**	**112**	**76**	**89**	**9**	**0**	**165**	**70**
Total Trips (ES Peak)	**14**	**42**	**0**	**71**	**43**	**88**	**59**	**116**	**7**	**0**	**187**	**70**
Total Trips (HS Peak)	**15**	**46**	**0**	**65**	**49**	**98**	**66**	**77**	**8**	**0**	**144**	**61**

2015 FB PM **Braddock Road and Goshen Road**

	NB			SB			EB			WB		
	L	T	R	L	T	R	L	T	R	L	T	R
LCPS MS-5								47			58	
Westport By-Right	0	0	0	0	0	0	0	33	0	0	57	0
Lenah Property	0	0	0	0	0	0	0	18	0	0	34	0
Braddock Crossing	0	0	0	0	0	0	0	13	0	0	22	0
Stoneridge Residential	0	0	0	0	0	0	0	2	0	0	1	0
Stoneridge Retail/Ancellary Uses	0	0	0	0	0	0	0	2	0	0	2	0
Marrwood Property	0	0	0	0	0	0	0	7	0	0	13	0
C.D.Smith	0	0	0	0	0	0	0	24	0	0	12	0
Kirkpatrick Farms	0	0	0	0	0	0	0	4	0	0	2	0
Kirkpatrick Farms West	0	0	0	0	0	0	0	19	0	0	10	0
Braddock Corner	0	0	0	0	0	0	0	6	0	0	3	0
Providence Glen	0	0	0	0	0	0	0	4	0	0	2	0
Gum Spring Village Center	0	0	0	0	0	0	0	5	0	0	5	0
Greenfields Property	0	0	0	0	0	0	0	15	0	0	26	0
Arcola Center	0	0	0	0	0	0	0	10	0	0	15	0
Total Trips (Commuter Peak)	**0**	**0**	**0**	**0**	**0**	**0**	**0**	**161**	**0**	**0**	**204**	**0**
Total Trips (ES Peak)	**0**	**0**	**0**	**0**	**0**	**0**	**0**	**173**	**0**	**0**	**217**	**0**
Total Trips (HS Peak)	**0**	**0**	**0**	**0**	**0**	**0**	**0**	**140**	**0**	**0**	**177**	**0**

2015 FB PM **Route 50 and Goshen Road**

	NB			SB			EB			WB		
	L	T	R	L	T	R	L	T	R	L	T	R
LCPS MS-5												
Westport By-Right	14	0	25	0	0	0	0	6	25	14	3	0
Lenah Property	0	0	0	0	0	0	0	11	0	0	21	0
Braddock Crossing	0	0	0	0	0	0	0	7	0	0	13	0
Stoneridge Residential	0	0	0	0	0	0	0	2	0	0	1	0
Stoneridge Retail/Ancellary Uses	0	0	0	0	0	0	0	3	0	0	3	0
Marrwood Property	4	0	7	0	0	0	0	0	8	15	0	0
C.D.Smith	0	0	0	0	0	0	0	1	0	0	0	0
Kirkpatrick Farms	0	0	0	0	0	0	0	0	0	0	0	0
Kirkpatrick Farms West	0	0	0	0	0	0	0	0	0	0	0	0
Braddock Corner	0	0	0	0	0	0	0	1	0	0	1	0
Providence Glen	0	0	0	0	0	0	0	17	0	0	15	0
Gum Spring Village Center	0	0	0	0	0	0	0	7	0	0	7	0
Greenfields Property	0	0	0	0	0	0	0	1	0	0	2	0
Arcola Center	0	0	0	0	0	0	0	54	0	0	83	0
Total Trips (Commuter Peak)	**18**	**0**	**32**	**0**	**0**	**0**	**0**	**110**	**33**	**29**	**148**	**0**
Total Trips (ES Peak)	**14**	**0**	**25**	**0**	**0**	**0**	**0**	**86**	**25**	**22**	**116**	**0**
Total Trips (HS Peak)	**15**	**0**	**27**	**0**	**0**	**0**	**0**	**96**	**28**	**25**	**129**	**0**

2015 FB PM **Braddock Rd and North Star Blvd. (Rel Rt.659)**

	NB			SB			EB			WB		
	L	T	R	L	T	R	L	T	R	L	T	R
LCPS MS-5								47			58	
Westport By-Right	0	0	0	0	0	0	0	27	0	0	48	0
Lenah Property	0	0	0	0	0	0	0	14	0	0	25	0
Braddock Crossing								9			17	
Stoneridge Residential	0	0	0	0	0	0	0	2	0	0	1	0
Stoneridge Retail/Ancellary Uses	0	0	0	0	0	0	0	2	0	0	2	0
Marrwood Property	0	0	0	0	0	0	0	4	0	0	7	0
C.D.Smith	0	0	0	33	0	17	34	0	0	0	0	63
Kirkpatrick Farms	0	0	0	0	0	0	0	4	0	0	2	0
Kirkpatrick Farms West	0	0	0	0	0	0	0	19	0	0	10	0
Braddock Corner	0	0	0	0	0	0	0	7	0	0	4	0
Providence Glen	0	0	0	0	0	0	0	6	0	0	2	0
Gum Spring Village Center	0	0	0	0	0	0	0	5	0	0	5	0
Greenfields Property	0	0	0	0	0	0	0	25	0	0	46	0
Arcola Center	0	0	0	0	0	0	0	10	0	0	15	0
Total Trips (Commuter Peak)	**0**	**0**	**0**	**33**	**0**	**17**	**34**	**134**	**0**	**0**	**184**	**63**
Total Trips (ES Peak)	**0**	**0**	**0**	**26**	**0**	**14**	**27**	**151**	**0**	**0**	**202**	**49**
Total Trips (HS Peak)	**0**	**0**	**0**	**29**	**0**	**15**	**30**	**116**	**0**	**0**	**160**	**55**

2015 FB PM **Gum Spring and Tall Cedars Pkwy**

	NB			SB			EB			WB		
	L	T	R	L	T	R	L	T	R	L	T	R
LCPS MS-5		16			13							
Westport By-Right	0	14	0	0	25	0	0	0	0	0	0	0
Lenah Property	0	3	0	0	6	0	0	0	0	0	0	0
Braddock Crossing		2			4							
Stoneridge Residential	6	0	0	0	0	3	1	0	3	0	0	0
Stoneridge Retail/Ancellary Uses	6	0	0	0	0	7	7	0	9	0	0	0
Marrwood Property	0	1	0	0	1	0	0	0	0	0	0	0
C.D.Smith	0	7	0	0	14	0	0	0	0	0	0	0
Kirkpatrick Farms	0	2	0	0	4	0	0	0	0	0	0	0
Kirkpatrick Farms West	0	7	0	0	13	0	0	0	0	0	0	0
Braddock Corner	0	5	0	0	9	0	0	0	0	0	0	0
Providence Glen	0	8	0	0	18	0	0	0	0	0	0	0
Gum Spring Village Center	0	8	0	0	22	0	0	0	0	0	0	0
Greenfields Property	0	7	0	0	12	0	0	0	0	0	0	0
Arcola Center	0	65	0	0	100	0	0	0	0	0	0	0
Total Trips (Commuter Peak)	**12**	**129**	**0**	**0**	**228**	**10**	**8**	**0**	**12**	**0**	**0**	**0**
Total Trips (ES Peak)	**9**	**117**	**0**	**0**	**191**	**8**	**7**	**0**	**9**	**0**	**0**	**0**
Total Trips (HS Peak)	**10**	**112**	**0**	**0**	**199**	**8**	**7**	**0**	**10**	**0**	**0**	**0**

APPENDIX K-1

INTERSECTION CAPACITY ANALYSIS RESULTS– FUTURE CONDITIONS WITHOUT PROPOSED DEVELOPMENT (2015) – HS PEAK, ALTERNATIVE 1

HCM Signalized Intersection Capacity Analysis
100: Route 50 & Goshen Road

LCPS (HS 7)
2015 Future Background

Movement	EBL	EBT	EBR	WBL	WBT	WBR	NBL	NBT	NBR	SBL	SBT	SBR
Lane Configurations												
Volume (vph)	10	1006	55	88	438	12	51	9	77	5	1	0
Ideal Flow (vphpl)	1900	1900	1900	1900	1900	1900	1900	1900	1900	1900	1900	1900
Total Lost time (s)	7.0	7.0	7.0	7.0	7.0	7.0		7.0			7.0	
Lane Util. Factor	1.00	0.95	1.00	1.00	0.95	1.00		1.00			1.00	
Frt	1.00	1.00	0.85	1.00	1.00	0.85		0.92			1.00	
Flt Protected	0.95	1.00	1.00	0.95	1.00	1.00		0.98			0.96	
Satd. Flow (prot)	1770	3505	1583	1770	3343	1583		1690			1788	
Flt Permitted	0.95	1.00	1.00	0.95	1.00	1.00		0.88			0.82	
Satd. Flow (perm)	1770	3505	1583	1770	3343	1583		1507			1523	
Peak-hour factor, PHF	0.92	0.92	0.92	0.92	0.92	0.92	0.92	0.92	0.92	0.92	0.92	0.92
Adj. Flow (vph)	11	1093	60	96	476	13	55	10	84	5	1	0
RTOR Reduction (vph)	0	0	30	0	0	5	0	25	0	0	0	0
Lane Group Flow (vph)	11	1093	30	96	476	8	0	124	0	0	6	0
Heavy Vehicles (%)	2%	3%	2%	2%	8%	2%	2%	2%	2%	2%	2%	2%
Turn Type	Prot		Perm	Prot		Perm	Perm			Perm		
Protected Phases	5	2		1	6			8			4	
Permitted Phases			2			6	8			4		
Actuated Green, G (s)	1.2	40.2	40.2	10.3	49.3	49.3		12.4			12.4	
Effective Green, g (s)	1.2	40.2	40.2	10.3	49.3	49.3		12.4			12.4	
Actuated g/C Ratio	0.01	0.48	0.48	0.12	0.59	0.59		0.15			0.15	
Clearance Time (s)	7.0	7.0	7.0	7.0	7.0	7.0		7.0			7.0	
Vehicle Extension (s)	3.0	3.0	3.0	3.0	3.0	3.0		3.0			3.0	
Lane Grp Cap (vph)	25	1679	758	217	1964	930		223			225	
v/s Ratio Prot	0.01	c0.31		c0.05	0.14							
v/s Ratio Perm			0.02			0.00		c0.08			0.00	
v/c Ratio	0.44	0.65	0.04	0.44	0.24	0.01		0.56			0.03	
Uniform Delay, d1	41.0	16.5	11.6	34.1	8.3	7.2		33.2			30.6	
Progression Factor	1.00	1.00	1.00	1.00	1.00	1.00		1.00			1.00	
Incremental Delay, d2	11.9	0.9	0.0	1.4	0.1	0.0		3.0			0.0	
Delay (s)	52.9	17.5	11.6	35.6	8.4	7.2		36.2			30.6	
Level of Service	D	B	B	D	A	A		D			C	
Approach Delay (s)		17.5			12.8			36.2			30.6	
Approach LOS		B			B			D			C	

Intersection Summary			
HCM Average Control Delay	17.6	HCM Level of Service	B
HCM Volume to Capacity ratio	0.60		
Actuated Cycle Length (s)	83.9	Sum of lost time (s)	21.0
Intersection Capacity Utilization	57.8%	ICU Level of Service	B
Analysis Period (min)	15		

c Critical Lane Group

HCM Unsignalized Intersection Capacity Analysis
200: Tall Cedars Pkwy & West Spine Road

LCPS (HS 7)
2015 Future Background

Movement	EBL	EBR	NBL	NBT	SBT	SBR
Lane Configurations						
Volume (veh/h)	51	84	53	886	390	48
Sign Control	Stop			Free	Free	
Grade	0%			0%	0%	
Peak Hour Factor	0.92	0.92	0.92	0.92	0.92	0.92
Hourly flow rate (vph)	55	91	58	963	424	52
Pedestrians						
Lane Width (ft)						
Walking Speed (ft/s)						
Percent Blockage						
Right turn flare (veh)						
Median type				None	None	
Median storage veh)						
Upstream signal (ft)						
pX, platoon unblocked						
vC, conflicting volume	1021	212	424			
vC1, stage 1 conf vol						
vC2, stage 2 conf vol						
vCu, unblocked vol	1021	212	424			
tC, single (s)	6.8	6.9	4.1			
tC, 2 stage (s)						
tF (s)	3.5	3.3	2.2			
p0 queue free %	75	88	95			
cM capacity (veh/h)	221	793	1132			

Direction, Lane #	EB 1	EB 2	NB 1	NB 2	SB 1	SB 2	SB 3
Volume Total	55	91	379	642	212	212	52
Volume Left	55	0	58	0	0	0	0
Volume Right	0	91	0	0	0	0	52
cSH	221	793	1132	1700	1700	1700	1700
Volume to Capacity	0.25	0.12	0.05	0.38	0.12	0.12	0.03
Queue Length 95th (ft)	24	10	4	0	0	0	0
Control Delay (s)	26.7	10.1	1.7	0.0	0.0	0.0	0.0
Lane LOS	D	B	A				
Approach Delay (s)	16.4		0.6		0.0		
Approach LOS	C						

Intersection Summary			
Average Delay	1.9		
Intersection Capacity Utilization	50.1%	ICU Level of Service	A
Analysis Period (min)	15		

HCM Signalized Intersection Capacity Analysis
300: Braddock Road & Gum Spring Road

LCPS (HS 7)
2015 Future Background

Movement	EBL	EBT	EBR	WBL	WBT	WBR	NBL	NBT	NBR	SBL	SBT	SBR
Lane Configurations												
Volume (vph)	170	564	51	92	296	263	43	291	119	311	191	92
Ideal Flow (vphpl)	1900	1900	1900	1900	1900	1900	1900	1900	1900	1900	1900	1900
Total Lost time (s)	7.0	7.0	7.0	7.0	7.0	7.0	7.0	7.0		7.0	7.0	7.0
Lane Util. Factor	1.00	1.00	1.00	1.00	1.00	1.00	1.00	0.95		1.00	0.95	1.00
Frt	1.00	1.00	0.85	1.00	1.00	0.85	1.00	0.96		1.00	1.00	0.85
Flt Protected	0.95	1.00	1.00	0.95	1.00	1.00	0.95	1.00		0.95	1.00	1.00
Satd. Flow (prot)	1770	1863	1583	1770	1863	1583	1770	3385		1770	3539	1583
Flt Permitted	0.43	1.00	1.00	0.12	1.00	1.00	0.62	1.00		0.24	1.00	1.00
Satd. Flow (perm)	802	1863	1583	217	1863	1583	1157	3385		449	3539	1583
Peak-hour factor, PHF	0.92	0.92	0.92	0.92	0.92	0.92	0.92	0.92	0.92	0.92	0.92	0.92
Adj. Flow (vph)	185	613	55	100	322	286	47	316	129	338	208	100
RTOR Reduction (vph)	0	0	34	0	0	70	0	40	0	0	0	65
Lane Group Flow (vph)	185	613	21	100	322	216	47	405	0	338	208	35
Turn Type	pm+pt		pm+ov	pm+pt		pm+ov	pm+pt			pm+pt		pm+ov
Protected Phases	7	4	5	3	8	1	5	2		1	6	7
Permitted Phases	4		4	8		8	2			6		6
Actuated Green, G (s)	42.3	37.2	40.3	40.1	36.1	52.8	21.2	18.1		41.8	31.7	36.8
Effective Green, g (s)	42.3	37.2	40.3	40.1	36.1	52.8	21.2	18.1		41.8	31.7	36.8
Actuated g/C Ratio	0.41	0.36	0.39	0.39	0.35	0.51	0.20	0.17		0.40	0.30	0.35
Clearance Time (s)	7.0	7.0	7.0	7.0	7.0	7.0	7.0	7.0		7.0	7.0	7.0
Vehicle Extension (s)	3.0	3.0	3.0	3.0	3.0	3.0	3.0	3.0		3.0	3.0	3.0
Lane Grp Cap (vph)	374	666	720	143	647	910	254	589		393	1079	667
v/s Ratio Prot	0.02	c0.33	0.00	c0.03	0.17	0.04	0.01	0.12		c0.14	0.06	0.00
v/s Ratio Perm	0.18		0.01	0.24		0.10	0.03			c0.21		0.02
v/c Ratio	0.49	0.92	0.03	0.70	0.50	0.24	0.19	0.69		0.86	0.19	0.05
Uniform Delay, d1	22.9	32.0	19.7	24.6	26.8	14.3	33.9	40.3		24.2	26.7	22.1
Progression Factor	1.00	1.00	1.00	1.00	1.00	1.00	1.00	1.00		1.00	1.00	1.00
Incremental Delay, d2	1.0	18.1	0.0	13.9	0.6	0.1	0.4	3.3		17.2	0.1	0.0
Delay (s)	24.0	50.1	19.8	38.5	27.4	14.5	34.2	43.6		41.4	26.8	22.2
Level of Service	C	D	B	D	C	B	C	D		D	C	C
Approach Delay (s)		42.5			23.7			42.7			33.7	
Approach LOS		D			C			D			C	

Intersection Summary			
HCM Average Control Delay	35.5	HCM Level of Service	D
HCM Volume to Capacity ratio	0.78		
Actuated Cycle Length (s)	104.0	Sum of lost time (s)	14.0
Intersection Capacity Utilization	87.2%	ICU Level of Service	E
Analysis Period (min)	15		
c Critical Lane Group			

HCM Unsignalized Intersection Capacity Analysis
600: Road A & North Star Blvd.

LCPS (HS 7)
2015 Future Background

Movement	EBL	EBR	NBL	NBT	SBT	SBR
Lane Configurations						
Sign Control	Stop			Stop	Stop	
Volume (vph)	10	13	27	68	139	21
Peak Hour Factor	0.92	0.92	0.92	0.92	0.92	0.92
Hourly flow rate (vph)	11	14	29	74	151	23

Direction, Lane #	EB 1	EB 2	NB 1	NB 2	SB 1	SB 2
Volume Total (vph)	11	14	29	74	151	23
Volume Left (vph)	11	0	29	0	0	0
Volume Right (vph)	0	14	0	0	0	23
Hadj (s)	0.84	-0.56	0.82	0.03	0.03	-0.36
Departure Headway (s)	6.0	4.6	5.5	4.7	4.7	4.3
Degree Utilization, x	0.02	0.02	0.04	0.10	0.20	0.03
Capacity (veh/h)	568	738	640	747	753	822
Control Delay (s)	7.9	6.5	7.6	7.0	7.6	6.2
Approach Delay (s)	7.1		7.2		7.4	
Approach LOS	A		A		A	

Intersection Summary			
Delay	7.3		
HCM Level of Service	A		
Intersection Capacity Utilization	24.0%	ICU Level of Service	A
Analysis Period (min)	15		

Movement	EBL	EBR	NBL	NBT	SBT	SBR
Lane Configurations						
Sign Control	Stop			Stop	Stop	
Volume (vph)	62	113	241	39	25	133
Peak Hour Factor	0.92	0.92	0.92	0.92	0.92	0.92
Hourly flow rate (vph)	67	123	262	42	27	145

Direction, Lane #	EB 1	EB 2	NB 1	NB 2	SB 1	SB 2
Volume Total (vph)	67	123	262	42	27	145
Volume Left (vph)	67	0	262	0	0	0
Volume Right (vph)	0	123	0	0	0	145
Hadj (s)	0.53	-0.67	0.53	0.20	0.10	-0.67
Departure Headway (s)	6.2	5.0	5.7	5.4	5.5	4.7
Degree Utilization, x	0.12	0.17	0.42	0.06	0.04	0.19
Capacity (veh/h)	541	667	612	641	624	731
Control Delay (s)	8.8	7.8	11.6	7.6	7.5	7.6
Approach Delay (s)	8.2		11.0		7.6	
Approach LOS	A		B		A	

Intersection Summary			
Delay	9.3		
HCM Level of Service	A		
Intersection Capacity Utilization	30.1%	ICU Level of Service	A
Analysis Period (min)	15		

Movement	EBL	EBT	WBT	WBR	SBL	SBR
Lane Configurations						
Volume (veh/h)	88	290	183	224	156	65
Sign Control		Free	Free		Stop	
Grade		0%	0%		0%	
Peak Hour Factor	0.92	0.92	0.92	0.92	0.92	0.92
Hourly flow rate (vph)	96	315	199	243	170	71
Pedestrians						
Lane Width (ft)						
Walking Speed (ft/s)						
Percent Blockage						
Right turn flare (veh)						12
Median type		None	None			
Median storage veh)						
Upstream signal (ft)						
pX, platoon unblocked						
vC, conflicting volume	442				705	199
vC1, stage 1 conf vol						
vC2, stage 2 conf vol						
vCu, unblocked vol	442				705	199
tC, single (s)	4.1				6.4	6.2
tC, 2 stage (s)						
tF (s)	2.2				3.5	3.3
p0 queue free %	91				54	92
cM capacity (veh/h)	1118				368	842

Direction, Lane #	EB 1	WB 1	WB 2	SB 1
Volume Total	411	199	243	240
Volume Left	96	0	0	170
Volume Right	0	0	243	71
cSH	1118	1700	1700	521
Volume to Capacity	0.09	0.12	0.14	0.46
Queue Length 95th (ft)	7	0	0	60
Control Delay (s)	2.7	0.0	0.0	19.0
Lane LOS	A			C
Approach Delay (s)	2.7	0.0		19.0
Approach LOS				C

Intersection Summary			
Average Delay	5.2		
Intersection Capacity Utilization	48.4%	ICU Level of Service	A
Analysis Period (min)	15		

Movement	EBL	EBT	EBR	WBL	WBT	WBR	NBL	NBT	NBR	SBL	SBT	SBR
Lane Configurations												
Volume (vph)	1	402	45	60	1293	5	40	1	81	1	8	5
Ideal Flow (vphpl)	1900	1900	1900	1900	1900	1900	1900	1900	1900	1900	1900	1900
Total Lost time (s)	7.0	7.0	7.0	7.0	7.0	7.0		7.0			7.0	
Lane Util. Factor	1.00	0.95	1.00	1.00	0.95	1.00		1.00			1.00	
Frt	1.00	1.00	0.85	1.00	1.00	0.85		0.91			0.95	
Flt Protected	0.95	1.00	1.00	0.95	1.00	1.00		0.98			1.00	
Satd. Flow (prot)	1770	3505	1583	1770	3343	1583		1668			1773	
Flt Permitted	0.95	1.00	1.00	0.95	1.00	1.00		0.89			0.97	
Satd. Flow (perm)	1770	3505	1583	1770	3343	1583		1501			1730	
Peak-hour factor, PHF	0.92	0.92	0.92	0.92	0.92	0.92	0.92	0.92	0.92	0.92	0.92	0.92
Adj. Flow (vph)	1	437	49	65	1405	5	43	1	88	1	9	5
RTOR Reduction (vph)	0	0	27	0	0	1	0	38	0	0	4	0
Lane Group Flow (vph)	1	437	22	65	1405	4	0	94	0	0	11	0
Heavy Vehicles (%)	2%	3%	2%	2%	8%	2%	2%	2%	2%	2%	2%	2%
Turn Type	Prot		Perm	Prot		Perm	Perm			Perm		
Protected Phases	5	2		1	6			8			4	
Permitted Phases			2			6	8			4		
Actuated Green, G (s)	0.7	31.0	31.0	7.1	37.4	37.4		10.6			10.6	
Effective Green, g (s)	0.7	31.0	31.0	7.1	37.4	37.4		10.6			10.6	
Actuated g/C Ratio	0.01	0.44	0.44	0.10	0.54	0.54		0.15			0.15	
Clearance Time (s)	7.0	7.0	7.0	7.0	7.0	7.0		7.0			7.0	
Vehicle Extension (s)	3.0	3.0	3.0	3.0	3.0	3.0		3.0			3.0	
Lane Grp Cap (vph)	18	1559	704	180	1794	849		228			263	
v/s Ratio Prot	0.00	0.12		c0.04	c0.42							
v/s Ratio Perm			0.01			0.00		c0.06			0.01	
v/c Ratio	0.06	0.28	0.03	0.36	0.78	0.00		0.41			0.04	
Uniform Delay, d1	34.2	12.3	10.9	29.2	12.9	7.5		26.7			25.2	
Progression Factor	1.00	1.00	1.00	1.00	1.00	1.00		1.00			1.00	
Incremental Delay, d2	1.3	0.1	0.0	1.2	2.3	0.0		1.2			0.1	
Delay (s)	35.5	12.4	10.9	30.4	15.2	7.5		27.9			25.3	
Level of Service	D	B	B	C	B	A		C			C	
Approach Delay (s)		12.3			15.9			27.9			25.3	
Approach LOS		B			B			C			C	

Intersection Summary			
HCM Average Control Delay	15.9	HCM Level of Service	B
HCM Volume to Capacity ratio	0.73		
Actuated Cycle Length (s)	69.7	Sum of lost time (s)	21.0
Intersection Capacity Utilization	70.5%	ICU Level of Service	C
Analysis Period (min)	15		

c Critical Lane Group

Movement	EBL	EBR	NBL	NBT	SBT	SBR
Lane Configurations						
Volume (veh/h)	38	78	67	437	780	67
Sign Control	Stop			Free	Free	
Grade	0%			0%	0%	
Peak Hour Factor	0.92	0.92	0.92	0.92	0.92	0.92
Hourly flow rate (vph)	41	85	73	475	848	73
Pedestrians						
Lane Width (ft)						
Walking Speed (ft/s)						
Percent Blockage						
Right turn flare (veh)						
Median type				None	None	
Median storage veh)						
Upstream signal (ft)						
pX, platoon unblocked						
vC, conflicting volume	1231	424	848			
vC1, stage 1 conf vol						
vC2, stage 2 conf vol						
vCu, unblocked vol	1231	424	848			
tC, single (s)	6.9	6.9	4.1			
tC, 2 stage (s)						
tF (s)	3.5	3.3	2.2			
p0 queue free %	73	85	91			
cM capacity (veh/h)	153	579	785			

Direction, Lane #	EB 1	EB 2	NB 1	NB 2	SB 1	SB 2	SB 3
Volume Total	41	85	231	317	424	424	73
Volume Left	41	0	73	0	0	0	0
Volume Right	0	85	0	0	0	0	73
cSH	153	579	785	1700	1700	1700	1700
Volume to Capacity	0.27	0.15	0.09	0.19	0.25	0.25	0.04
Queue Length 95th (ft)	26	13	8	0	0	0	0
Control Delay (s)	37.1	12.3	3.9	0.0	0.0	0.0	0.0
Lane LOS	E	B	A				
Approach Delay (s)	20.4		1.6		0.0		
Approach LOS	C						

Intersection Summary			
Average Delay	2.2		
Intersection Capacity Utilization	48.9%	ICU Level of Service	A
Analysis Period (min)	15		

Movement	EBL	EBT	EBR	WBL	WBT	WBR	NBL	NBT	NBR	SBL	SBT	SBR
Lane Configurations												
Volume (vph)	140	217	57	144	269	150	44	183	65	133	338	119
Ideal Flow (vphpl)	1900	1900	1900	1900	1900	1900	1900	1900	1900	1900	1900	1900
Total Lost time (s)	7.0	7.0	7.0	7.0	7.0	7.0	7.0	7.0		7.0	7.0	7.0
Lane Util. Factor	1.00	1.00	1.00	1.00	1.00	1.00	1.00	0.95		1.00	0.95	1.00
Frt	1.00	1.00	0.85	1.00	1.00	0.85	1.00	0.96		1.00	1.00	0.85
Flt Protected	0.95	1.00	1.00	0.95	1.00	1.00	0.95	1.00		0.95	1.00	1.00
Satd. Flow (prot)	1770	1863	1583	1770	1863	1583	1770	3400		1770	3539	1583
Flt Permitted	0.42	1.00	1.00	0.57	1.00	1.00	0.53	1.00		0.42	1.00	1.00
Satd. Flow (perm)	787	1863	1583	1059	1863	1583	993	3400		784	3539	1583
Peak-hour factor, PHF	0.92	0.92	0.92	0.92	0.92	0.92	0.92	0.92	0.92	0.92	0.92	0.92
Adj. Flow (vph)	152	236	62	157	292	163	48	199	71	145	367	129
RTOR Reduction (vph)	0	0	45	0	0	109	0	34	0	0	0	83
Lane Group Flow (vph)	152	236	17	157	292	54	48	236	0	145	367	46
Turn Type	pm+pt		pm+ov	pm+pt		pm+ov	pm+pt			pm+pt		pm+ov
Protected Phases	7	4	5	3	8	1	5	2		1	6	7
Permitted Phases	4		4	8		8	2			6		6
Actuated Green, G (s)	27.3	17.4	20.5	26.3	16.9	24.8	15.4	12.3		25.0	17.1	27.0
Effective Green, g (s)	27.3	17.4	20.5	26.3	16.9	24.8	15.4	12.3		25.0	17.1	27.0
Actuated g/C Ratio	0.36	0.23	0.27	0.35	0.23	0.33	0.21	0.16		0.33	0.23	0.36
Clearance Time (s)	7.0	7.0	7.0	7.0	7.0	7.0	7.0	7.0		7.0	7.0	7.0
Vehicle Extension (s)	3.0	3.0	3.0	3.0	3.0	3.0	3.0	3.0		3.0	3.0	3.0
Lane Grp Cap (vph)	416	432	580	460	420	671	236	558		365	807	718
v/s Ratio Prot	c0.05	0.13	0.00	0.04	c0.16	0.01	0.01	0.07		c0.04	c0.10	0.01
v/s Ratio Perm	0.08		0.01	0.08		0.03	0.03			0.09		0.02
v/c Ratio	0.37	0.55	0.03	0.34	0.70	0.08	0.20	0.42		0.40	0.45	0.06
Uniform Delay, d1	16.8	25.3	20.0	17.4	26.7	17.3	24.3	28.2		18.3	24.9	15.7
Progression Factor	1.00	1.00	1.00	1.00	1.00	1.00	1.00	1.00		1.00	1.00	1.00
Incremental Delay, d2	0.5	1.4	0.0	0.4	4.9	0.1	0.4	0.5		0.7	0.4	0.0
Delay (s)	17.3	26.7	20.0	17.8	31.6	17.3	24.8	28.7		19.0	25.3	15.8
Level of Service	B	C	B	B	C	B	C	C		B	C	B
Approach Delay (s)		22.6			24.3			28.1			22.0	
Approach LOS		C			C			C			C	

Intersection Summary			
HCM Average Control Delay	23.8	HCM Level of Service	C
HCM Volume to Capacity ratio	0.56		
Actuated Cycle Length (s)	75.0	Sum of lost time (s)	28.0
Intersection Capacity Utilization	59.8%	ICU Level of Service	B
Analysis Period (min)	15		
c Critical Lane Group			

Movement	EBL	EBR	NBL	NBT	SBT	SBR
Lane Configurations						
Sign Control	Stop			Stop	Stop	
Volume (vph)	14	18	9	94	48	7
Peak Hour Factor	0.92	0.92	0.92	0.92	0.92	0.92
Hourly flow rate (vph)	15	20	10	102	52	8

Direction, Lane #	EB 1	EB 2	NB 1	NB 2	SB 1	SB 2
Volume Total (vph)	15	20	10	102	52	8
Volume Left (vph)	15	0	10	0	0	0
Volume Right (vph)	0	20	0	0	0	8
Hadj (s)	0.99	-0.22	0.69	0.03	0.03	-0.34
Departure Headway (s)	5.9	4.7	5.3	4.7	4.7	4.3
Degree Utilization, x	0.02	0.03	0.01	0.13	0.07	0.01
Capacity (veh/h)	584	736	662	755	755	811
Control Delay (s)	7.8	6.6	7.2	7.2	6.9	6.2
Approach Delay (s)	7.1		7.2		6.8	
Approach LOS	A		A		A	

Intersection Summary			
Delay	7.1		
HCM Level of Service	A		
Intersection Capacity Utilization	17.2%	ICU Level of Service	A
Analysis Period (min)	15		

Movement	EBL	EBR	NBL	NBT	SBT	SBR
Lane Configurations						
Sign Control	Stop			Stop	Stop	
Volume (vph)	90	163	81	13	21	45
Peak Hour Factor	0.92	0.92	0.92	0.92	0.92	0.92
Hourly flow rate (vph)	98	177	88	14	23	49

Direction, Lane #	EB 1	EB 2	NB 1	NB 2	SB 1	SB 2
Volume Total (vph)	98	177	88	14	23	49
Volume Left (vph)	98	0	88	0	0	0
Volume Right (vph)	0	177	0	0	0	49
Hadj (s)	0.53	-0.67	0.53	0.20	0.39	-0.67
Departure Headway (s)	5.5	4.3	5.8	5.4	5.7	4.6
Degree Utilization, x	0.15	0.21	0.14	0.02	0.04	0.06
Capacity (veh/h)	630	809	596	628	599	735
Control Delay (s)	8.2	7.2	8.5	7.4	7.7	6.7
Approach Delay (s)	7.6		8.4		7.0	
Approach LOS	A		A		A	

Intersection Summary			
Delay	7.7		
HCM Level of Service	A		
Intersection Capacity Utilization	22.8%	ICU Level of Service	A
Analysis Period (min)	15		

Movement	EBL	EBT	WBT	WBR	SBL	SBR
Lane Configurations						
Volume (veh/h)	54	130	190	124	169	69
Sign Control		Free	Free		Stop	
Grade		0%	0%		0%	
Peak Hour Factor	0.92	0.92	0.92	0.92	0.92	0.92
Hourly flow rate (vph)	59	141	207	135	184	75
Pedestrians						
Lane Width (ft)						
Walking Speed (ft/s)						
Percent Blockage						
Right turn flare (veh)						12
Median type		None	None			
Median storage veh)						
Upstream signal (ft)						
pX, platoon unblocked						
vC, conflicting volume	341				465	207
vC1, stage 1 conf vol						
vC2, stage 2 conf vol						
vCu, unblocked vol	341				465	207
tC, single (s)	4.1				6.4	6.2
tC, 2 stage (s)						
tF (s)	2.2				3.5	3.3
p0 queue free %	95				65	91
cM capacity (veh/h)	1218				529	834

Direction, Lane #	EB 1	EB 2	WB 1	WB 2	SB 1
Volume Total	59	141	207	135	259
Volume Left	59	0	0	0	184
Volume Right	0	0	0	135	75
cSH	1218	1700	1700	1700	745
Volume to Capacity	0.05	0.08	0.12	0.08	0.35
Queue Length 95th (ft)	4	0	0	0	39
Control Delay (s)	8.1	0.0	0.0	0.0	13.8
Lane LOS	A				B
Approach Delay (s)	2.4		0.0		13.8
Approach LOS					B

Intersection Summary			
Average Delay	5.0		
Intersection Capacity Utilization	32.7%	ICU Level of Service	A
Analysis Period (min)	15		

Movement	EBL	EBT	EBR	WBL	WBT	WBR	NBL	NBT	NBR	SBL	SBT	SBR
Lane Configurations												
Volume (vph)	10	1006	55	88	438	12	51	9	77	5	1	0
Ideal Flow (vphpl)	1900	1900	1900	1900	1900	1900	1900	1900	1900	1900	1900	1900
Total Lost time (s)	7.0	7.0	7.0	7.0	7.0	7.0		7.0			7.0	
Lane Util. Factor	1.00	0.95	1.00	1.00	0.95	1.00		1.00			1.00	
Frt	1.00	1.00	0.85	1.00	1.00	0.85		0.92			1.00	
Flt Protected	0.95	1.00	1.00	0.95	1.00	1.00		0.98			0.96	
Satd. Flow (prot)	1770	3505	1583	1770	3343	1583		1690			1788	
Flt Permitted	0.95	1.00	1.00	0.95	1.00	1.00		0.88			0.82	
Satd. Flow (perm)	1770	3505	1583	1770	3343	1583		1507			1523	
Peak-hour factor, PHF	0.92	0.92	0.92	0.92	0.92	0.92	0.92	0.92	0.92	0.92	0.92	0.92
Adj. Flow (vph)	11	1093	60	96	476	13	55	10	84	5	1	0
RTOR Reduction (vph)	0	0	30	0	0	5	0	25	0	0	0	0
Lane Group Flow (vph)	11	1093	30	96	476	8	0	124	0	0	6	0
Heavy Vehicles (%)	2%	3%	2%	2%	8%	2%	2%	2%	2%	2%	2%	2%
Turn Type	Prot		Perm	Prot		Perm	Perm			Perm		
Protected Phases	5	2		1	6			8			4	
Permitted Phases			2			6	8			4		
Actuated Green, G (s)	1.2	40.2	40.2	10.3	49.3	49.3		12.4			12.4	
Effective Green, g (s)	1.2	40.2	40.2	10.3	49.3	49.3		12.4			12.4	
Actuated g/C Ratio	0.01	0.48	0.48	0.12	0.59	0.59		0.15			0.15	
Clearance Time (s)	7.0	7.0	7.0	7.0	7.0	7.0		7.0			7.0	
Vehicle Extension (s)	3.0	3.0	3.0	3.0	3.0	3.0		3.0			3.0	
Lane Grp Cap (vph)	25	1679	758	217	1964	930		223			225	
v/s Ratio Prot	0.01	c0.31		c0.05	0.14							
v/s Ratio Perm			0.02			0.00		c0.08			0.00	
v/c Ratio	0.44	0.65	0.04	0.44	0.24	0.01		0.56			0.03	
Uniform Delay, d1	41.0	16.5	11.6	34.1	8.3	7.2		33.2			30.6	
Progression Factor	1.00	1.00	1.00	1.00	1.00	1.00		1.00			1.00	
Incremental Delay, d2	11.9	0.9	0.0	1.4	0.1	0.0		3.0			0.0	
Delay (s)	52.9	17.5	11.6	35.6	8.4	7.2		36.2			30.6	
Level of Service	D	B	B	D	A	A		D			C	
Approach Delay (s)		17.5			12.8			36.2			30.6	
Approach LOS		B			B			D			C	

Intersection Summary			
HCM Average Control Delay	17.6	HCM Level of Service	B
HCM Volume to Capacity ratio	0.60		
Actuated Cycle Length (s)	83.9	Sum of lost time (s)	21.0
Intersection Capacity Utilization	57.8%	ICU Level of Service	B
Analysis Period (min)	15		

c Critical Lane Group

Movement	EBL	EBR	NBL	NBT	SBT	SBR
Lane Configurations						
Volume (veh/h)	51	84	53	886	390	48
Sign Control	Stop			Free	Free	
Grade	0%			0%	0%	
Peak Hour Factor	0.92	0.92	0.92	0.92	0.92	0.92
Hourly flow rate (vph)	55	91	58	963	424	52
Pedestrians						
Lane Width (ft)						
Walking Speed (ft/s)						
Percent Blockage						
Right turn flare (veh)						
Median type				None	None	
Median storage veh)						
Upstream signal (ft)						
pX, platoon unblocked						
vC, conflicting volume	1021	212	424			
vC1, stage 1 conf vol						
vC2, stage 2 conf vol						
vCu, unblocked vol	1021	212	424			
tC, single (s)	6.8	6.9	4.1			
tC, 2 stage (s)						
tF (s)	3.5	3.3	2.2			
p0 queue free %	75	88	95			
cM capacity (veh/h)	221	793	1132			

Direction, Lane #	EB 1	EB 2	NB 1	NB 2	SB 1	SB 2	SB 3
Volume Total	55	91	379	642	212	212	52
Volume Left	55	0	58	0	0	0	0
Volume Right	0	91	0	0	0	0	52
cSH	221	793	1132	1700	1700	1700	1700
Volume to Capacity	0.25	0.12	0.05	0.38	0.12	0.12	0.03
Queue Length 95th (ft)	24	10	4	0	0	0	0
Control Delay (s)	26.7	10.1	1.7	0.0	0.0	0.0	0.0
Lane LOS	D	B	A				
Approach Delay (s)	16.4		0.6		0.0		
Approach LOS	C						

Intersection Summary			
Average Delay	1.9		
Intersection Capacity Utilization	50.1%	ICU Level of Service	A
Analysis Period (min)	15		

Movement	EBL	EBT	EBR	WBL	WBT	WBR	NBL	NBT	NBR	SBL	SBT	SBR
Lane Configurations												
Volume (vph)	170	564	51	92	296	263	43	291	119	311	191	92
Ideal Flow (vphpl)	1900	1900	1900	1900	1900	1900	1900	1900	1900	1900	1900	1900
Total Lost time (s)	7.0	7.0	7.0	7.0	7.0	7.0	7.0	7.0		7.0	7.0	7.0
Lane Util. Factor	1.00	1.00	1.00	1.00	1.00	1.00	1.00	0.95		1.00	0.95	1.00
Frt	1.00	1.00	0.85	1.00	1.00	0.85	1.00	0.96		1.00	1.00	0.85
Flt Protected	0.95	1.00	1.00	0.95	1.00	1.00	0.95	1.00		0.95	1.00	1.00
Satd. Flow (prot)	1770	1863	1583	1770	1863	1583	1770	3385		1770	3539	1583
Flt Permitted	0.43	1.00	1.00	0.12	1.00	1.00	0.62	1.00		0.24	1.00	1.00
Satd. Flow (perm)	802	1863	1583	217	1863	1583	1157	3385		449	3539	1583
Peak-hour factor, PHF	0.92	0.92	0.92	0.92	0.92	0.92	0.92	0.92	0.92	0.92	0.92	0.92
Adj. Flow (vph)	185	613	55	100	322	286	47	316	129	338	208	100
RTOR Reduction (vph)	0	0	34	0	0	70	0	40	0	0	0	65
Lane Group Flow (vph)	185	613	21	100	322	216	47	405	0	338	208	35
Turn Type	pm+pt		pm+ov	pm+pt		pm+ov	pm+pt			pm+pt		pm+ov
Protected Phases	7	4	5	3	8	1	5	2		1	6	7
Permitted Phases	4		4	8		8	2			6		6
Actuated Green, G (s)	42.3	37.2	40.3	40.1	36.1	52.8	21.2	18.1		41.8	31.7	36.8
Effective Green, g (s)	42.3	37.2	40.3	40.1	36.1	52.8	21.2	18.1		41.8	31.7	36.8
Actuated g/C Ratio	0.41	0.36	0.39	0.39	0.35	0.51	0.20	0.17		0.40	0.30	0.35
Clearance Time (s)	7.0	7.0	7.0	7.0	7.0	7.0	7.0	7.0		7.0	7.0	7.0
Vehicle Extension (s)	3.0	3.0	3.0	3.0	3.0	3.0	3.0	3.0		3.0	3.0	3.0
Lane Grp Cap (vph)	374	666	720	143	647	910	254	589		393	1079	667
v/s Ratio Prot	0.02	c0.33	0.00	c0.03	0.17	0.04	0.01	0.12		c0.14	0.06	0.00
v/s Ratio Perm	0.18		0.01	0.24		0.10	0.03			c0.21		0.02
v/c Ratio	0.49	0.92	0.03	0.70	0.50	0.24	0.19	0.69		0.86	0.19	0.05
Uniform Delay, d1	22.9	32.0	19.7	24.6	26.8	14.3	33.9	40.3		24.2	26.7	22.1
Progression Factor	1.00	1.00	1.00	1.00	1.00	1.00	1.00	1.00		1.00	1.00	1.00
Incremental Delay, d2	1.0	18.1	0.0	13.9	0.6	0.1	0.4	3.3		17.2	0.1	0.0
Delay (s)	24.0	50.1	19.8	38.5	27.4	14.5	34.2	43.6		41.4	26.8	22.2
Level of Service	C	D	B	D	C	B	C	D		D	C	C
Approach Delay (s)		42.5			23.7			42.7			33.7	
Approach LOS		D			C			D			C	

Intersection Summary			
HCM Average Control Delay	35.5	HCM Level of Service	D
HCM Volume to Capacity ratio	0.78		
Actuated Cycle Length (s)	104.0	Sum of lost time (s)	14.0
Intersection Capacity Utilization	87.2%	ICU Level of Service	E
Analysis Period (min)	15		
c Critical Lane Group			

Movement	EBL	EBR	NBL	NBT	SBT	SBR
Lane Configurations						
Sign Control	Stop			Stop	Stop	
Volume (vph)	10	13	27	68	139	21
Peak Hour Factor	0.92	0.92	0.92	0.92	0.92	0.92
Hourly flow rate (vph)	11	14	29	74	151	23

Direction, Lane #	EB 1	EB 2	NB 1	NB 2	SB 1	SB 2
Volume Total (vph)	11	14	29	74	151	23
Volume Left (vph)	11	0	29	0	0	0
Volume Right (vph)	0	14	0	0	0	23
Hadj (s)	0.84	-0.56	0.82	0.03	0.03	-0.36
Departure Headway (s)	6.0	4.6	5.5	4.7	4.7	4.3
Degree Utilization, x	0.02	0.02	0.04	0.10	0.20	0.03
Capacity (veh/h)	568	738	640	747	753	822
Control Delay (s)	7.9	6.5	7.6	7.0	7.6	6.2
Approach Delay (s)	7.1		7.2		7.4	
Approach LOS	A		A		A	

Intersection Summary			
Delay	7.3		
HCM Level of Service	A		
Intersection Capacity Utilization	24.0%	ICU Level of Service	A
Analysis Period (min)	15		

Movement	EBL	EBR	NBL	NBT	SBT	SBR
Lane Configurations						
Sign Control	Stop			Stop	Stop	
Volume (vph)	62	113	241	39	25	133
Peak Hour Factor	0.92	0.92	0.92	0.92	0.92	0.92
Hourly flow rate (vph)	67	123	262	42	27	145

Direction, Lane #	EB 1	EB 2	NB 1	NB 2	SB 1	SB 2
Volume Total (vph)	67	123	262	42	27	145
Volume Left (vph)	67	0	262	0	0	0
Volume Right (vph)	0	123	0	0	0	145
Hadj (s)	0.53	-0.67	0.53	0.20	0.10	-0.67
Departure Headway (s)	6.2	5.0	5.7	5.4	5.5	4.7
Degree Utilization, x	0.12	0.17	0.42	0.06	0.04	0.19
Capacity (veh/h)	541	667	612	641	624	731
Control Delay (s)	8.8	7.8	11.6	7.6	7.5	7.6
Approach Delay (s)	8.2		11.0		7.6	
Approach LOS	A		B		A	

Intersection Summary			
Delay	9.3		
HCM Level of Service	A		
Intersection Capacity Utilization	30.1%	ICU Level of Service	A
Analysis Period (min)	15		

Movement	EBL	EBT	WBT	WBR	SBL	SBR
Lane Configurations						
Volume (veh/h)	88	290	183	224	156	65
Sign Control		Free	Free		Stop	
Grade		0%	0%		0%	
Peak Hour Factor	0.92	0.92	0.92	0.92	0.92	0.92
Hourly flow rate (vph)	96	315	199	243	170	71
Pedestrians						
Lane Width (ft)						
Walking Speed (ft/s)						
Percent Blockage						
Right turn flare (veh)						12
Median type		None	None			
Median storage veh)						
Upstream signal (ft)						
pX, platoon unblocked						
vC, conflicting volume	442				705	199
vC1, stage 1 conf vol						
vC2, stage 2 conf vol						
vCu, unblocked vol	442				705	199
tC, single (s)	4.1				6.4	6.2
tC, 2 stage (s)						
tF (s)	2.2				3.5	3.3
p0 queue free %	91				54	92
cM capacity (veh/h)	1118				368	842

Direction, Lane #	EB 1	WB 1	WB 2	SB 1
Volume Total	411	199	243	240
Volume Left	96	0	0	170
Volume Right	0	0	243	71
cSH	1118	1700	1700	521
Volume to Capacity	0.09	0.12	0.14	0.46
Queue Length 95th (ft)	7	0	0	60
Control Delay (s)	2.7	0.0	0.0	19.0
Lane LOS	A			C
Approach Delay (s)	2.7	0.0		19.0
Approach LOS				C

Intersection Summary			
Average Delay	5.2		
Intersection Capacity Utilization	48.4%	ICU Level of Service	A
Analysis Period (min)	15		

HCM Signalized Intersection Capacity Analysis
100: Route 50 & Goshen Road

LCPS (HS 7)
2015 Future Background

Movement	EBL	EBT	EBR	WBL	WBT	WBR	NBL	NBT	NBR	SBL	SBT	SBR
Lane Configurations												
Volume (vph)	1	402	45	60	1293	5	40	1	81	1	8	5
Ideal Flow (vphpl)	1900	1900	1900	1900	1900	1900	1900	1900	1900	1900	1900	1900
Total Lost time (s)	7.0	7.0	7.0	7.0	7.0	7.0		7.0			7.0	
Lane Util. Factor	1.00	0.95	1.00	1.00	0.95	1.00		1.00			1.00	
Frt	1.00	1.00	0.85	1.00	1.00	0.85		0.91			0.95	
Flt Protected	0.95	1.00	1.00	0.95	1.00	1.00		0.98			1.00	
Satd. Flow (prot)	1770	3505	1583	1770	3343	1583		1668			1773	
Flt Permitted	0.95	1.00	1.00	0.95	1.00	1.00		0.89			0.97	
Satd. Flow (perm)	1770	3505	1583	1770	3343	1583		1501			1730	
Peak-hour factor, PHF	0.92	0.92	0.92	0.92	0.92	0.92	0.92	0.92	0.92	0.92	0.92	0.92
Adj. Flow (vph)	1	437	49	65	1405	5	43	1	88	1	9	5
RTOR Reduction (vph)	0	0	27	0	0	1	0	38	0	0	4	0
Lane Group Flow (vph)	1	437	22	65	1405	4	0	94	0	0	11	0
Heavy Vehicles (%)	2%	3%	2%	2%	8%	2%	2%	2%	2%	2%	2%	2%
Turn Type	Prot		Perm	Prot		Perm	Perm			Perm		
Protected Phases	5	2		1	6			8			4	
Permitted Phases			2			6	8			4		
Actuated Green, G (s)	0.7	31.0	31.0	7.1	37.4	37.4		10.6			10.6	
Effective Green, g (s)	0.7	31.0	31.0	7.1	37.4	37.4		10.6			10.6	
Actuated g/C Ratio	0.01	0.44	0.44	0.10	0.54	0.54		0.15			0.15	
Clearance Time (s)	7.0	7.0	7.0	7.0	7.0	7.0		7.0			7.0	
Vehicle Extension (s)	3.0	3.0	3.0	3.0	3.0	3.0		3.0			3.0	
Lane Grp Cap (vph)	18	1559	704	180	1794	849		228			263	
v/s Ratio Prot	0.00	0.12		c0.04	c0.42							
v/s Ratio Perm			0.01			0.00		c0.06			0.01	
v/c Ratio	0.06	0.28	0.03	0.36	0.78	0.00		0.41			0.04	
Uniform Delay, d1	34.2	12.3	10.9	29.2	12.9	7.5		26.7			25.2	
Progression Factor	1.00	1.00	1.00	1.00	1.00	1.00		1.00			1.00	
Incremental Delay, d2	1.3	0.1	0.0	1.2	2.3	0.0		1.2			0.1	
Delay (s)	35.5	12.4	10.9	30.4	15.2	7.5		27.9			25.3	
Level of Service	D	B	B	C	B	A		C			C	
Approach Delay (s)		12.3			15.9			27.9			25.3	
Approach LOS		B			B			C			C	

Intersection Summary			
HCM Average Control Delay	15.9	HCM Level of Service	B
HCM Volume to Capacity ratio	0.73		
Actuated Cycle Length (s)	69.7	Sum of lost time (s)	21.0
Intersection Capacity Utilization	70.5%	ICU Level of Service	C
Analysis Period (min)	15		

c Critical Lane Group

HCM Unsignalized Intersection Capacity Analysis
200: Tall Cedars Pkwy & West Spine Road

LCPS (HS 7)
2015 Future Background

Movement	EBL	EBR	NBL	NBT	SBT	SBR
Lane Configurations						
Volume (veh/h)	38	78	67	437	780	67
Sign Control	Stop			Free	Free	
Grade	0%			0%	0%	
Peak Hour Factor	0.92	0.92	0.92	0.92	0.92	0.92
Hourly flow rate (vph)	41	85	73	475	848	73
Pedestrians						
Lane Width (ft)						
Walking Speed (ft/s)						
Percent Blockage						
Right turn flare (veh)						
Median type				None	None	
Median storage veh)						
Upstream signal (ft)						
pX, platoon unblocked						
vC, conflicting volume	1231	424	848			
vC1, stage 1 conf vol						
vC2, stage 2 conf vol						
vCu, unblocked vol	1231	424	848			
tC, single (s)	6.9	6.9	4.1			
tC, 2 stage (s)						
tF (s)	3.5	3.3	2.2			
p0 queue free %	73	85	91			
cM capacity (veh/h)	153	579	785			

Direction, Lane #	EB 1	EB 2	NB 1	NB 2	SB 1	SB 2	SB 3
Volume Total	41	85	231	317	424	424	73
Volume Left	41	0	73	0	0	0	0
Volume Right	0	85	0	0	0	0	73
cSH	153	579	785	1700	1700	1700	1700
Volume to Capacity	0.27	0.15	0.09	0.19	0.25	0.25	0.04
Queue Length 95th (ft)	26	13	8	0	0	0	0
Control Delay (s)	37.1	12.3	3.9	0.0	0.0	0.0	0.0
Lane LOS	E	B	A				
Approach Delay (s)	20.4		1.6		0.0		
Approach LOS	C						

Intersection Summary			
Average Delay	2.2		
Intersection Capacity Utilization	48.9%	ICU Level of Service	A
Analysis Period (min)	15		

Movement	EBL	EBT	EBR	WBL	WBT	WBR	NBL	NBT	NBR	SBL	SBT	SBR
Lane Configurations												
Volume (vph)	140	217	57	144	269	150	44	183	65	133	338	119
Ideal Flow (vphpl)	1900	1900	1900	1900	1900	1900	1900	1900	1900	1900	1900	1900
Total Lost time (s)	7.0	7.0	7.0	7.0	7.0	7.0	7.0	7.0		7.0	7.0	7.0
Lane Util. Factor	1.00	1.00	1.00	1.00	1.00	1.00	1.00	0.95		1.00	0.95	1.00
Frt	1.00	1.00	0.85	1.00	1.00	0.85	1.00	0.96		1.00	1.00	0.85
Flt Protected	0.95	1.00	1.00	0.95	1.00	1.00	0.95	1.00		0.95	1.00	1.00
Satd. Flow (prot)	1770	1863	1583	1770	1863	1583	1770	3400		1770	3539	1583
Flt Permitted	0.42	1.00	1.00	0.57	1.00	1.00	0.53	1.00		0.42	1.00	1.00
Satd. Flow (perm)	787	1863	1583	1059	1863	1583	993	3400		784	3539	1583
Peak-hour factor, PHF	0.92	0.92	0.92	0.92	0.92	0.92	0.92	0.92	0.92	0.92	0.92	0.92
Adj. Flow (vph)	152	236	62	157	292	163	48	199	71	145	367	129
RTOR Reduction (vph)	0	0	45	0	0	109	0	34	0	0	0	83
Lane Group Flow (vph)	152	236	17	157	292	54	48	236	0	145	367	46
Turn Type	pm+pt		pm+ov	pm+pt		pm+ov	pm+pt			pm+pt		pm+ov
Protected Phases	7	4	5	3	8	1	5	2		1	6	7
Permitted Phases	4		4	8		8	2			6		6
Actuated Green, G (s)	27.3	17.4	20.5	26.3	16.9	24.8	15.4	12.3		25.0	17.1	27.0
Effective Green, g (s)	27.3	17.4	20.5	26.3	16.9	24.8	15.4	12.3		25.0	17.1	27.0
Actuated g/C Ratio	0.36	0.23	0.27	0.35	0.23	0.33	0.21	0.16		0.33	0.23	0.36
Clearance Time (s)	7.0	7.0	7.0	7.0	7.0	7.0	7.0	7.0		7.0	7.0	7.0
Vehicle Extension (s)	3.0	3.0	3.0	3.0	3.0	3.0	3.0	3.0		3.0	3.0	3.0
Lane Grp Cap (vph)	416	432	580	460	420	671	236	558		365	807	718
v/s Ratio Prot	c0.05	0.13	0.00	0.04	c0.16	0.01	0.01	0.07		c0.04	c0.10	0.01
v/s Ratio Perm	0.08		0.01	0.08		0.03	0.03			0.09		0.02
v/c Ratio	0.37	0.55	0.03	0.34	0.70	0.08	0.20	0.42		0.40	0.45	0.06
Uniform Delay, d1	16.8	25.3	20.0	17.4	26.7	17.3	24.3	28.2		18.3	24.9	15.7
Progression Factor	1.00	1.00	1.00	1.00	1.00	1.00	1.00	1.00		1.00	1.00	1.00
Incremental Delay, d2	0.5	1.4	0.0	0.4	4.9	0.1	0.4	0.5		0.7	0.4	0.0
Delay (s)	17.3	26.7	20.0	17.8	31.6	17.3	24.8	28.7		19.0	25.3	15.8
Level of Service	B	C	B	B	C	B	C	C		B	C	B
Approach Delay (s)		22.6			24.3			28.1			22.0	
Approach LOS		C			C			C			C	

Intersection Summary			
HCM Average Control Delay	23.8	HCM Level of Service	C
HCM Volume to Capacity ratio	0.56		
Actuated Cycle Length (s)	75.0	Sum of lost time (s)	28.0
Intersection Capacity Utilization	59.8%	ICU Level of Service	B
Analysis Period (min)	15		
c Critical Lane Group			

Movement	EBL	EBR	NBL	NBT	SBT	SBR
Lane Configurations						
Sign Control	Stop			Stop	Stop	
Volume (vph)	14	18	9	94	48	7
Peak Hour Factor	0.92	0.92	0.92	0.92	0.92	0.92
Hourly flow rate (vph)	15	20	10	102	52	8

Direction, Lane #	EB 1	EB 2	NB 1	NB 2	SB 1	SB 2
Volume Total (vph)	15	20	10	102	52	8
Volume Left (vph)	15	0	10	0	0	0
Volume Right (vph)	0	20	0	0	0	8
Hadj (s)	0.99	-0.22	0.69	0.03	0.03	-0.34
Departure Headway (s)	5.9	4.7	5.3	4.7	4.7	4.3
Degree Utilization, x	0.02	0.03	0.01	0.13	0.07	0.01
Capacity (veh/h)	584	736	662	755	755	811
Control Delay (s)	7.8	6.6	7.2	7.2	6.9	6.2
Approach Delay (s)	7.1		7.2		6.8	
Approach LOS	A		A		A	

Intersection Summary			
Delay	7.1		
HCM Level of Service	A		
Intersection Capacity Utilization	17.2%	ICU Level of Service	A
Analysis Period (min)	15		

Movement	EBL	EBR	NBL	NBT	SBT	SBR
Lane Configurations						
Sign Control	Stop			Stop	Stop	
Volume (vph)	90	163	81	13	21	45
Peak Hour Factor	0.92	0.92	0.92	0.92	0.92	0.92
Hourly flow rate (vph)	98	177	88	14	23	49

Direction, Lane #	EB 1	EB 2	NB 1	NB 2	SB 1	SB 2
Volume Total (vph)	98	177	88	14	23	49
Volume Left (vph)	98	0	88	0	0	0
Volume Right (vph)	0	177	0	0	0	49
Hadj (s)	0.53	-0.67	0.53	0.20	0.39	-0.67
Departure Headway (s)	5.5	4.3	5.8	5.4	5.7	4.6
Degree Utilization, x	0.15	0.21	0.14	0.02	0.04	0.06
Capacity (veh/h)	630	809	596	628	599	735
Control Delay (s)	8.2	7.2	8.5	7.4	7.7	6.7
Approach Delay (s)	7.6		8.4		7.0	
Approach LOS	A		A		A	

Intersection Summary			
Delay	7.7		
HCM Level of Service	A		
Intersection Capacity Utilization	22.8%	ICU Level of Service	A
Analysis Period (min)	15		

Movement	EBL	EBT	WBT	WBR	SBL	SBR
Lane Configurations						
Volume (veh/h)	54	130	190	124	169	69
Sign Control		Free	Free		Stop	
Grade		0%	0%		0%	
Peak Hour Factor	0.92	0.92	0.92	0.92	0.92	0.92
Hourly flow rate (vph)	59	141	207	135	184	75
Pedestrians						
Lane Width (ft)						
Walking Speed (ft/s)						
Percent Blockage						
Right turn flare (veh)						12
Median type		None	None			
Median storage veh)						
Upstream signal (ft)						
pX, platoon unblocked						
vC, conflicting volume	341				465	207
vC1, stage 1 conf vol						
vC2, stage 2 conf vol						
vCu, unblocked vol	341				465	207
tC, single (s)	4.1				6.4	6.2
tC, 2 stage (s)						
tF (s)	2.2				3.5	3.3
p0 queue free %	95				65	91
cM capacity (veh/h)	1218				529	834

Direction, Lane #	EB 1	WB 1	WB 2	SB 1
Volume Total	200	207	135	259
Volume Left	59	0	0	184
Volume Right	0	0	135	75
cSH	1218	1700	1700	745
Volume to Capacity	0.05	0.12	0.08	0.35
Queue Length 95th (ft)	4	0	0	39
Control Delay (s)	2.7	0.0	0.0	13.8
Lane LOS	A			B
Approach Delay (s)	2.7	0.0		13.8
Approach LOS				B

Intersection Summary			
Average Delay	5.1		
Intersection Capacity Utilization	39.2%	ICU Level of Service	A
Analysis Period (min)	15		

APPENDIX K-2

INTERSECTION CAPACITY ANALYSIS RESULTS– FUTURE CONDITIONS WITHOUT PROPOSED DEVELOPMENT (2015) – HS PEAK ALTERNATIVE 2

Movement	EBL	EBT	EBR	WBL	WBT	WBR	NBL	NBT	NBR	SBL	SBT	SBR
Lane Configurations												
Volume (vph)	10	1006	50	61	438	12	48	9	64	5	1	0
Ideal Flow (vphpl)	1900	1900	1900	1900	1900	1900	1900	1900	1900	1900	1900	1900
Total Lost time (s)	7.0	7.0	7.0	7.0	7.0	7.0		7.0			7.0	
Lane Util. Factor	1.00	0.95	1.00	1.00	0.95	1.00		1.00			1.00	
Frt	1.00	1.00	0.85	1.00	1.00	0.85		0.93			1.00	
Flt Protected	0.95	1.00	1.00	0.95	1.00	1.00		0.98			0.96	
Satd. Flow (prot)	1770	3505	1583	1770	3343	1583		1696			1788	
Flt Permitted	0.95	1.00	1.00	0.95	1.00	1.00		0.87			0.75	
Satd. Flow (perm)	1770	3505	1583	1770	3343	1583		1502			1406	
Peak-hour factor, PHF	0.92	0.92	0.92	0.92	0.92	0.92	0.92	0.92	0.92	0.92	0.92	0.92
Adj. Flow (vph)	11	1093	54	66	476	13	52	10	70	5	1	0
RTOR Reduction (vph)	0	0	27	0	0	6	0	22	0	0	0	0
Lane Group Flow (vph)	11	1093	27	66	476	7	0	110	0	0	6	0
Heavy Vehicles (%)	2%	3%	2%	2%	8%	2%	2%	2%	2%	2%	2%	2%
Turn Type	Prot		Perm	Prot		Perm	Perm			Perm		
Protected Phases	5	2		1	6			8			4	
Permitted Phases			2			6	8			4		
Actuated Green, G (s)	1.1	37.3	37.3	6.7	42.9	42.9		11.2			11.2	
Effective Green, g (s)	1.1	37.3	37.3	6.7	42.9	42.9		11.2			11.2	
Actuated g/C Ratio	0.01	0.49	0.49	0.09	0.56	0.56		0.15			0.15	
Clearance Time (s)	7.0	7.0	7.0	7.0	7.0	7.0		7.0			7.0	
Vehicle Extension (s)	3.0	3.0	3.0	3.0	3.0	3.0		3.0			3.0	
Lane Grp Cap (vph)	26	1716	775	156	1882	891		221			207	
v/s Ratio Prot	0.01	c0.31		c0.04	c0.14							
v/s Ratio Perm			0.02			0.00		c0.07			0.00	
v/c Ratio	0.42	0.64	0.04	0.42	0.25	0.01		0.50			0.03	
Uniform Delay, d1	37.2	14.4	10.1	32.9	8.5	7.3		29.9			27.8	
Progression Factor	1.00	1.00	1.00	1.00	1.00	1.00		1.00			1.00	
Incremental Delay, d2	10.7	0.8	0.0	1.8	0.1	0.0		1.8			0.1	
Delay (s)	48.0	15.2	10.1	34.8	8.6	7.3		31.7			27.9	
Level of Service	D	B	B	C	A	A		C			C	
Approach Delay (s)		15.3			11.6			31.7			27.9	
Approach LOS		B			B			C			C	

Intersection Summary			
HCM Average Control Delay	15.4	HCM Level of Service	B
HCM Volume to Capacity ratio	0.67		
Actuated Cycle Length (s)	76.2	Sum of lost time (s)	28.0
Intersection Capacity Utilization	55.4%	ICU Level of Service	B
Analysis Period (min)	15		

c Critical Lane Group

Movement	EBL	EBR	NBL	NBT	SBT	SBR
Lane Configurations						
Volume (veh/h)	46	84	53	886	390	38
Sign Control	Stop			Free	Free	
Grade	0%			0%	0%	
Peak Hour Factor	0.92	0.92	0.92	0.92	0.92	0.92
Hourly flow rate (vph)	50	91	58	963	424	41
Pedestrians						
Lane Width (ft)						
Walking Speed (ft/s)						
Percent Blockage						
Right turn flare (veh)						
Median type				None	None	
Median storage veh)						
Upstream signal (ft)						
pX, platoon unblocked						
vC, conflicting volume	1021	212	424			
vC1, stage 1 conf vol						
vC2, stage 2 conf vol						
vCu, unblocked vol	1021	212	424			
tC, single (s)	6.8	6.9	4.1			
tC, 2 stage (s)						
tF (s)	3.5	3.3	2.2			
p0 queue free %	77	88	95			
cM capacity (veh/h)	221	793	1132			

Direction, Lane #	EB 1	EB 2	NB 1	NB 2	SB 1	SB 2	SB 3
Volume Total	50	91	379	642	212	212	41
Volume Left	50	0	58	0	0	0	0
Volume Right	0	91	0	0	0	0	41
cSH	221	793	1132	1700	1700	1700	1700
Volume to Capacity	0.23	0.12	0.05	0.38	0.12	0.12	0.02
Queue Length 95th (ft)	21	10	4	0	0	0	0
Control Delay (s)	26.0	10.1	1.7	0.0	0.0	0.0	0.0
Lane LOS	D	B	A				
Approach Delay (s)	15.8		0.6		0.0		
Approach LOS	C						

Intersection Summary			
Average Delay	1.8		
Intersection Capacity Utilization	50.1%	ICU Level of Service	A
Analysis Period (min)	15		

Movement	EBL	EBT	EBR	WBL	WBT	WBR	NBL	NBT	NBR	SBL	SBT	SBR
Lane Configurations												
Volume (vph)	167	641	49	92	460	263	38	291	119	311	191	86
Ideal Flow (vphpl)	1900	1900	1900	1900	1900	1900	1900	1900	1900	1900	1900	1900
Total Lost time (s)	7.0	7.0	7.0	7.0	7.0	7.0	7.0	7.0		7.0	7.0	7.0
Lane Util. Factor	1.00	1.00	1.00	1.00	1.00	1.00	1.00	0.95		1.00	0.95	1.00
Frt	1.00	1.00	0.85	1.00	1.00	0.85	1.00	0.96		1.00	1.00	0.85
Flt Protected	0.95	1.00	1.00	0.95	1.00	1.00	0.95	1.00		0.95	1.00	1.00
Satd. Flow (prot)	1770	1863	1583	1770	1863	1583	1770	3385		1770	3539	1583
Flt Permitted	0.25	1.00	1.00	0.10	1.00	1.00	0.62	1.00		0.23	1.00	1.00
Satd. Flow (perm)	460	1863	1583	183	1863	1583	1157	3385		427	3539	1583
Peak-hour factor, PHF	0.92	0.92	0.92	0.92	0.92	0.92	0.92	0.92	0.92	0.92	0.92	0.92
Adj. Flow (vph)	182	697	53	100	500	286	41	316	129	338	208	93
RTOR Reduction (vph)	0	0	31	0	0	55	0	41	0	0	0	61
Lane Group Flow (vph)	182	697	22	100	500	231	41	404	0	338	208	32
Turn Type	pm+pt		pm+ov	pm+pt		pm+ov	pm+pt			pm+pt		pm+ov
Protected Phases	7	4	5	3	8	1	5	2		1	6	7
Permitted Phases	4		4	8		8	2			6		6
Actuated Green, G (s)	46.7	41.7	44.9	44.7	40.7	57.7	21.5	18.3		42.3	32.1	37.1
Effective Green, g (s)	46.7	41.7	44.9	44.7	40.7	57.7	21.5	18.3		42.3	32.1	37.1
Actuated g/C Ratio	0.43	0.38	0.41	0.41	0.37	0.53	0.20	0.17		0.39	0.29	0.34
Clearance Time (s)	7.0	7.0	7.0	7.0	7.0	7.0	7.0	7.0		7.0	7.0	7.0
Vehicle Extension (s)	3.0	3.0	3.0	3.0	3.0	3.0	3.0	3.0		3.0	3.0	3.0
Lane Grp Cap (vph)	257	713	754	133	696	940	246	568		375	1042	640
v/s Ratio Prot	c0.03	c0.37	0.00	0.03	0.27	0.04	0.00	0.12		c0.14	0.06	0.00
v/s Ratio Perm	0.27		0.01	0.28		0.11	0.03			c0.21		0.02
v/c Ratio	0.71	0.98	0.03	0.75	0.72	0.25	0.17	0.71		0.90	0.20	0.05
Uniform Delay, d1	26.8	33.2	19.1	26.1	29.2	13.9	36.0	42.9		26.6	28.8	24.1
Progression Factor	1.00	1.00	1.00	1.00	1.00	1.00	1.00	1.00		1.00	1.00	1.00
Incremental Delay, d2	8.6	27.9	0.0	21.0	3.6	0.1	0.3	4.2		23.9	0.1	0.0
Delay (s)	35.4	61.0	19.1	47.1	32.8	14.0	36.3	47.1		50.5	28.9	24.2
Level of Service	D	E	B	D	C	B	D	D		D	C	C
Approach Delay (s)		53.7			28.4			46.1			39.6	
Approach LOS		D			C			D			D	

Intersection Summary			
HCM Average Control Delay	41.8	HCM Level of Service	D
HCM Volume to Capacity ratio	0.84		
Actuated Cycle Length (s)	109.0	Sum of lost time (s)	14.0
Intersection Capacity Utilization	91.2%	ICU Level of Service	F
Analysis Period (min)	15		
c Critical Lane Group			

Movement	EBL	EBR	NBL	NBT	SBT	SBR
Lane Configurations						
Sign Control	Stop			Stop	Stop	
Volume (vph)	4	19	40	29	55	9
Peak Hour Factor	0.92	0.92	0.92	0.92	0.92	0.92
Hourly flow rate (vph)	4	21	43	32	60	10

Direction, Lane #	EB 1	EB 2	NB 1	NB 2	SB 1	SB 2
Volume Total (vph)	4	21	43	32	60	10
Volume Left (vph)	4	0	43	0	0	0
Volume Right (vph)	0	21	0	0	0	10
Hadj (s)	0.93	-0.55	0.81	0.03	0.03	-0.33
Departure Headway (s)	5.8	4.3	5.4	4.6	4.7	4.3
Degree Utilization, x	0.01	0.02	0.07	0.04	0.08	0.01
Capacity (veh/h)	608	804	652	760	766	821
Control Delay (s)	7.6	6.2	7.6	6.6	6.8	6.1
Approach Delay (s)	6.4		7.2		6.7	
Approach LOS	A		A		A	

Intersection Summary			
Delay	6.9		
HCM Level of Service	A		
Intersection Capacity Utilization	18.9%	ICU Level of Service	A
Analysis Period (min)	15		

Movement	EBL	EBR	NBL	NBT	SBT	SBR
Lane Configurations						
Sign Control	Stop			Stop	Stop	
Volume (vph)	23	167	357	52	31	49
Peak Hour Factor	0.92	0.92	0.92	0.92	0.92	0.92
Hourly flow rate (vph)	25	182	388	57	34	53

Direction, Lane #	EB 1	EB 2	NB 1	NB 2	SB 1	SB 2
Volume Total (vph)	25	182	388	57	34	53
Volume Left (vph)	25	0	388	0	0	0
Volume Right (vph)	0	182	0	0	0	53
Hadj (s)	0.53	-0.67	0.53	0.22	0.10	-0.67
Departure Headway (s)	6.4	5.2	5.7	5.4	5.7	4.9
Degree Utilization, x	0.04	0.26	0.61	0.08	0.05	0.07
Capacity (veh/h)	523	644	611	644	596	689
Control Delay (s)	8.5	8.8	16.2	7.7	7.8	7.1
Approach Delay (s)	8.8		15.1		7.4	
Approach LOS	A		C		A	

Intersection Summary			
Delay	12.4		
HCM Level of Service	B		
Intersection Capacity Utilization	36.4%	ICU Level of Service	A
Analysis Period (min)	15		

Movement	EBL	EBT	WBT	WBR	SBL	SBR
Lane Configurations						
Volume (veh/h)	72	290	183	368	224	58
Sign Control		Free	Free		Stop	
Grade		0%	0%		0%	
Peak Hour Factor	0.92	0.92	0.92	0.92	0.92	0.92
Hourly flow rate (vph)	78	315	199	400	243	63
Pedestrians						
Lane Width (ft)						
Walking Speed (ft/s)						
Percent Blockage						
Right turn flare (veh)						12
Median type		None	None			
Median storage veh)						
Upstream signal (ft)						
pX, platoon unblocked						
vC, conflicting volume	599				671	199
vC1, stage 1 conf vol						
vC2, stage 2 conf vol						
vCu, unblocked vol	599				671	199
tC, single (s)	4.1				6.4	6.2
tC, 2 stage (s)						
tF (s)	2.2				3.5	3.3
p0 queue free %	92				37	93
cM capacity (veh/h)	978				388	842

Direction, Lane #	EB 1	EB 2	WB 1	WB 2	SB 1
Volume Total	78	315	199	400	307
Volume Left	78	0	0	0	243
Volume Right	0	0	0	400	63
cSH	978	1700	1700	1700	489
Volume to Capacity	0.08	0.19	0.12	0.24	0.63
Queue Length 95th (ft)	7	0	0	0	106
Control Delay (s)	9.0	0.0	0.0	0.0	24.7
Lane LOS	A				C
Approach Delay (s)	1.8		0.0		24.7
Approach LOS					C

Intersection Summary			
Average Delay	6.4		
Intersection Capacity Utilization	36.0%	ICU Level of Service	A
Analysis Period (min)	15		

HCM Signalized Intersection Capacity Analysis
100: Route 50 & Goshen Road

LCPS (HS 7)
2015 Future Background

Movement	EBL	EBT	EBR	WBL	WBT	WBR	NBL	NBT	NBR	SBL	SBT	SBR
Lane Configurations												
Volume (vph)	1	402	43	51	1293	5	37	1	63	1	8	5
Ideal Flow (vphpl)	1900	1900	1900	1900	1900	1900	1900	1900	1900	1900	1900	1900
Total Lost time (s)	7.0	7.0	7.0	7.0	7.0	7.0		7.0			7.0	
Lane Util. Factor	1.00	0.95	1.00	1.00	0.95	1.00		1.00			1.00	
Frt	1.00	1.00	0.85	1.00	1.00	0.85		0.92			0.95	
Flt Protected	0.95	1.00	1.00	0.95	1.00	1.00		0.98			1.00	
Satd. Flow (prot)	1770	3505	1583	1770	3343	1583		1663			1773	
Flt Permitted	0.95	1.00	1.00	0.95	1.00	1.00		0.87			0.97	
Satd. Flow (perm)	1770	3505	1583	1770	3343	1583		1478			1730	
Peak-hour factor, PHF	0.92	0.92	0.92	0.92	0.92	0.92	0.92	0.92	0.92	0.92	0.92	0.92
Adj. Flow (vph)	1	437	47	55	1405	5	40	1	68	1	9	5
RTOR Reduction (vph)	0	0	25	0	0	1	0	33	0	0	4	0
Lane Group Flow (vph)	1	437	22	55	1405	4	0	76	0	0	11	0
Heavy Vehicles (%)	2%	3%	2%	2%	8%	2%	4%	2%	2%	2%	2%	2%
Turn Type	Prot		Perm	Prot		Perm	Perm			Perm		
Protected Phases	5	2		1	6			8			4	
Permitted Phases			2			6	8			4		
Actuated Green, G (s)	0.7	32.2	32.2	4.9	36.4	36.4		9.8			9.8	
Effective Green, g (s)	0.7	32.2	32.2	4.9	36.4	36.4		9.8			9.8	
Actuated g/C Ratio	0.01	0.47	0.47	0.07	0.54	0.54		0.14			0.14	
Clearance Time (s)	7.0	7.0	7.0	7.0	7.0	7.0		7.0			7.0	
Vehicle Extension (s)	3.0	3.0	3.0	3.0	3.0	3.0		3.0			3.0	
Lane Grp Cap (vph)	18	1662	751	128	1792	849		213			250	
v/s Ratio Prot	0.00	0.12		c0.03	c0.42							
v/s Ratio Perm			0.01			0.00		c0.05			0.01	
v/c Ratio	0.06	0.26	0.03	0.43	0.78	0.00		0.36			0.04	
Uniform Delay, d1	33.3	10.7	9.5	30.2	12.6	7.3		26.2			25.0	
Progression Factor	1.00	1.00	1.00	1.00	1.00	1.00		1.00			1.00	
Incremental Delay, d2	1.3	0.1	0.0	2.3	2.3	0.0		1.0			0.1	
Delay (s)	34.6	10.8	9.5	32.5	14.9	7.3		27.3			25.1	
Level of Service	C	B	A	C	B	A		C			C	
Approach Delay (s)		10.7			15.6			27.3			25.1	
Approach LOS		B			B			C			C	

Intersection Summary			
HCM Average Control Delay	15.1	HCM Level of Service	B
HCM Volume to Capacity ratio	0.73		
Actuated Cycle Length (s)	67.9	Sum of lost time (s)	21.0
Intersection Capacity Utilization	66.7%	ICU Level of Service	C
Analysis Period (min)	15		

c Critical Lane Group

HCM Unsignalized Intersection Capacity Analysis
200: Tall Cedars Pkwy & West Spine Road

LCPS (HS 7)
2015 Future Background

Movement	EBL	EBR	NBL	NBT	SBT	SBR
Lane Configurations						
Volume (veh/h)	31	78	67	437	780	64
Sign Control	Stop			Free	Free	
Grade	0%			0%	0%	
Peak Hour Factor	0.92	0.92	0.92	0.92	0.92	0.92
Hourly flow rate (vph)	34	85	73	475	848	70
Pedestrians						
Lane Width (ft)						
Walking Speed (ft/s)						
Percent Blockage						
Right turn flare (veh)						
Median type				None	None	
Median storage veh)						
Upstream signal (ft)						
pX, platoon unblocked						
vC, conflicting volume	1231	424	848			
vC1, stage 1 conf vol						
vC2, stage 2 conf vol						
vCu, unblocked vol	1231	424	848			
tC, single (s)	6.8	6.9	4.1			
tC, 2 stage (s)						
tF (s)	3.5	3.3	2.2			
p0 queue free %	78	85	91			
cM capacity (veh/h)	154	579	785			

Direction, Lane #	EB 1	EB 2	NB 1	NB 2	SB 1	SB 2	SB 3
Volume Total	34	85	231	317	424	424	70
Volume Left	34	0	73	0	0	0	0
Volume Right	0	85	0	0	0	0	70
cSH	154	579	785	1700	1700	1700	1700
Volume to Capacity	0.22	0.15	0.09	0.19	0.25	0.25	0.04
Queue Length 95th (ft)	20	13	8	0	0	0	0
Control Delay (s)	34.8	12.3	3.9	0.0	0.0	0.0	0.0
Lane LOS	D	B	A				
Approach Delay (s)	18.7		1.6		0.0		
Approach LOS	C						

Intersection Summary			
Average Delay	2.0		
Intersection Capacity Utilization	48.9%	ICU Level of Service	A
Analysis Period (min)	15		

Movement	EBL	EBT	EBR	WBL	WBT	WBR	NBL	NBT	NBR	SBL	SBT	SBR
Lane Configurations												
Volume (vph)	136	329	54	144	325	150	42	183	65	133	338	117
Ideal Flow (vphpl)	1900	1900	1900	1900	1900	1900	1900	1900	1900	1900	1900	1900
Total Lost time (s)	7.0	7.0	7.0	7.0	7.0	7.0	7.0	7.0		7.0	7.0	7.0
Lane Util. Factor	1.00	1.00	1.00	1.00	1.00	1.00	1.00	0.95		1.00	0.95	1.00
Frt	1.00	1.00	0.85	1.00	1.00	0.85	1.00	0.96		1.00	1.00	0.85
Flt Protected	0.95	1.00	1.00	0.95	1.00	1.00	0.95	1.00		0.95	1.00	1.00
Satd. Flow (prot)	1770	1863	1583	1770	1863	1583	1770	3400		1770	3539	1583
Flt Permitted	0.34	1.00	1.00	0.35	1.00	1.00	0.53	1.00		0.43	1.00	1.00
Satd. Flow (perm)	639	1863	1583	653	1863	1583	993	3400		793	3539	1583
Peak-hour factor, PHF	0.92	0.92	0.92	0.92	0.92	0.92	0.92	0.92	0.92	0.92	0.92	0.92
Adj. Flow (vph)	148	358	59	157	353	163	46	199	71	145	367	127
RTOR Reduction (vph)	0	0	41	0	0	105	0	34	0	0	0	83
Lane Group Flow (vph)	148	358	18	157	353	58	46	236	0	145	367	44
Turn Type	pm+pt		pm+ov	pm+pt		pm+ov	pm+pt			pm+pt		pm+ov
Protected Phases	7	4	5	3	8	1	5	2		1	6	7
Permitted Phases	4		4	8		8	2			6		6
Actuated Green, G (s)	29.8	20.1	23.2	29.2	19.8	27.7	15.9	12.8		25.5	17.6	27.3
Effective Green, g (s)	29.8	20.1	23.2	29.2	19.8	27.7	15.9	12.8		25.5	17.6	27.3
Actuated g/C Ratio	0.38	0.26	0.30	0.37	0.25	0.35	0.20	0.16		0.33	0.23	0.35
Clearance Time (s)	7.0	7.0	7.0	7.0	7.0	7.0	7.0	7.0		7.0	7.0	7.0
Vehicle Extension (s)	3.0	3.0	3.0	3.0	3.0	3.0	3.0	3.0		3.0	3.0	3.0
Lane Grp Cap (vph)	384	479	611	378	472	702	233	557		357	797	694
v/s Ratio Prot	0.05	c0.19	0.00	c0.05	0.19	0.01	0.01	0.07		c0.04	c0.10	0.01
v/s Ratio Perm	0.10		0.01	0.11		0.03	0.03			0.09		0.02
v/c Ratio	0.39	0.75	0.03	0.42	0.75	0.08	0.20	0.42		0.41	0.46	0.06
Uniform Delay, d1	16.8	26.7	19.5	17.2	26.9	16.8	25.5	29.4		19.5	26.2	16.9
Progression Factor	1.00	1.00	1.00	1.00	1.00	1.00	1.00	1.00		1.00	1.00	1.00
Incremental Delay, d2	0.6	6.3	0.0	0.7	6.4	0.1	0.4	0.5		0.8	0.4	0.0
Delay (s)	17.4	33.0	19.5	18.0	33.3	16.8	25.9	29.9		20.3	26.6	17.0
Level of Service	B	C	B	B	C	B	C	C		C	C	B
Approach Delay (s)		27.5			25.7			29.3			23.3	
Approach LOS		C			C			C			C	

Intersection Summary			
HCM Average Control Delay	26.0	HCM Level of Service	C
HCM Volume to Capacity ratio	0.53		
Actuated Cycle Length (s)	78.2	Sum of lost time (s)	21.0
Intersection Capacity Utilization	63.1%	ICU Level of Service	B
Analysis Period (min)	15		

c Critical Lane Group

Movement	EBL	EBR	NBL	NBT	SBT	SBR
Lane Configurations						
Sign Control	Stop			Stop	Stop	
Volume (vph)	6	27	13	37	19	3
Peak Hour Factor	0.92	0.92	0.92	0.92	0.92	0.92
Hourly flow rate (vph)	7	29	14	40	21	3

Direction, Lane #	EB 1	EB 2	NB 1	NB 2	SB 1	SB 2
Volume Total (vph)	7	29	14	40	21	3
Volume Left (vph)	7	0	14	0	0	0
Volume Right (vph)	0	29	0	0	0	3
Hadj (s)	2.20	-0.26	1.40	0.03	0.03	-0.14
Departure Headway (s)	6.9	4.4	6.0	4.6	4.7	4.5
Degree Utilization, x	0.01	0.04	0.02	0.05	0.03	0.00
Capacity (veh/h)	506	789	587	759	761	782
Control Delay (s)	8.8	6.4	8.0	6.7	6.6	6.3
Approach Delay (s)	6.8		7.0		6.6	
Approach LOS	A		A		A	

Intersection Summary			
Delay	6.9		
HCM Level of Service	A		
Intersection Capacity Utilization	17.4%	ICU Level of Service	A
Analysis Period (min)	15		

Movement	EBL	EBR	NBL	NBT	SBT	SBR
Lane Configurations						
Sign Control	Stop			Stop	Stop	
Volume (vph)	33	242	120	17	30	16
Peak Hour Factor	0.92	0.92	0.92	0.92	0.92	0.92
Hourly flow rate (vph)	36	263	130	18	33	17

Direction, Lane #	EB 1	EB 2	NB 1	NB 2	SB 1	SB 2
Volume Total (vph)	36	263	130	18	33	17
Volume Left (vph)	36	0	130	0	0	0
Volume Right (vph)	0	263	0	0	0	17
Hadj (s)	0.53	-0.67	0.53	0.20	0.39	-0.67
Departure Headway (s)	5.6	4.4	5.8	5.5	5.8	4.7
Degree Utilization, x	0.06	0.32	0.21	0.03	0.05	0.02
Capacity (veh/h)	616	792	593	623	584	711
Control Delay (s)	7.7	8.2	9.1	7.4	7.9	6.6
Approach Delay (s)	8.2		8.9		7.5	
Approach LOS	A		A		A	

Intersection Summary			
Delay	8.3		
HCM Level of Service	A		
Intersection Capacity Utilization	25.0%	ICU Level of Service	A
Analysis Period (min)	15		

Movement	EBL	EBT	WBT	WBR	SBL	SBR
Lane Configurations						
Volume (veh/h)	49	130	190	173	266	58
Sign Control		Free	Free		Stop	
Grade		0%	0%		0%	
Peak Hour Factor	0.92	0.92	0.92	0.92	0.92	0.92
Hourly flow rate (vph)	53	141	207	188	289	63
Pedestrians						
Lane Width (ft)						
Walking Speed (ft/s)						
Percent Blockage						
Right turn flare (veh)						12
Median type		None	None			
Median storage veh)						
Upstream signal (ft)						
pX, platoon unblocked						
vC, conflicting volume	395				454	207
vC1, stage 1 conf vol						
vC2, stage 2 conf vol						
vCu, unblocked vol	395				454	207
tC, single (s)	4.1				6.4	6.2
tC, 2 stage (s)						
tF (s)	2.2				3.5	3.3
p0 queue free %	95				46	92
cM capacity (veh/h)	1164				538	834

Direction, Lane #	EB 1	WB 1	WB 2	SB 1
Volume Total	195	207	188	352
Volume Left	53	0	0	289
Volume Right	0	0	188	63
cSH	1164	1700	1700	655
Volume to Capacity	0.05	0.12	0.11	0.54
Queue Length 95th (ft)	4	0	0	80
Control Delay (s)	2.6	0.0	0.0	17.5
Lane LOS	A			C
Approach Delay (s)	2.6	0.0		17.5
Approach LOS				C

Intersection Summary			
Average Delay	7.1		
Intersection Capacity Utilization	44.3%	ICU Level of Service	A
Analysis Period (min)	15		

Movement	EBL	EBT	EBR	WBL	WBT	WBR	NBL	NBT	NBR	SBL	SBT	SBR
Lane Configurations												
Volume (vph)	10	1006	50	61	438	12	48	9	64	5	1	0
Ideal Flow (vphpl)	1900	1900	1900	1900	1900	1900	1900	1900	1900	1900	1900	1900
Total Lost time (s)	7.0	7.0	7.0	7.0	7.0	7.0		7.0			7.0	
Lane Util. Factor	1.00	0.95	1.00	1.00	0.95	1.00		1.00			1.00	
Frt	1.00	1.00	0.85	1.00	1.00	0.85		0.93			1.00	
Flt Protected	0.95	1.00	1.00	0.95	1.00	1.00		0.98			0.96	
Satd. Flow (prot)	1770	3505	1583	1770	3343	1583		1696			1788	
Flt Permitted	0.95	1.00	1.00	0.95	1.00	1.00		0.87			0.75	
Satd. Flow (perm)	1770	3505	1583	1770	3343	1583		1502			1406	
Peak-hour factor, PHF	0.92	0.92	0.92	0.92	0.92	0.92	0.92	0.92	0.92	0.92	0.92	0.92
Adj. Flow (vph)	11	1093	54	66	476	13	52	10	70	5	1	0
RTOR Reduction (vph)	0	0	27	0	0	6	0	22	0	0	0	0
Lane Group Flow (vph)	11	1093	27	66	476	7	0	110	0	0	6	0
Heavy Vehicles (%)	2%	3%	2%	2%	8%	2%	2%	2%	2%	2%	2%	2%
Turn Type	Prot		Perm	Prot		Perm	Perm			Perm		
Protected Phases	5	2		1	6			8			4	
Permitted Phases			2			6	8			4		
Actuated Green, G (s)	1.1	37.3	37.3	6.7	42.9	42.9		11.2			11.2	
Effective Green, g (s)	1.1	37.3	37.3	6.7	42.9	42.9		11.2			11.2	
Actuated g/C Ratio	0.01	0.49	0.49	0.09	0.56	0.56		0.15			0.15	
Clearance Time (s)	7.0	7.0	7.0	7.0	7.0	7.0		7.0			7.0	
Vehicle Extension (s)	3.0	3.0	3.0	3.0	3.0	3.0		3.0			3.0	
Lane Grp Cap (vph)	26	1716	775	156	1882	891		221			207	
v/s Ratio Prot	0.01	c0.31		c0.04	c0.14							
v/s Ratio Perm			0.02			0.00		c0.07			0.00	
v/c Ratio	0.42	0.64	0.04	0.42	0.25	0.01		0.50			0.03	
Uniform Delay, d1	37.2	14.4	10.1	32.9	8.5	7.3		29.9			27.8	
Progression Factor	1.00	1.00	1.00	1.00	1.00	1.00		1.00			1.00	
Incremental Delay, d2	10.7	0.8	0.0	1.8	0.1	0.0		1.8			0.1	
Delay (s)	48.0	15.2	10.1	34.8	8.6	7.3		31.7			27.9	
Level of Service	D	B	B	C	A	A		C			C	
Approach Delay (s)		15.3			11.6			31.7			27.9	
Approach LOS		B			B			C			C	

Intersection Summary			
HCM Average Control Delay	15.4	HCM Level of Service	B
HCM Volume to Capacity ratio	0.67		
Actuated Cycle Length (s)	76.2	Sum of lost time (s)	28.0
Intersection Capacity Utilization	55.4%	ICU Level of Service	B
Analysis Period (min)	15		

c Critical Lane Group

Movement	EBL	EBR	NBL	NBT	SBT	SBR
Lane Configurations						
Volume (veh/h)	46	84	53	886	390	38
Sign Control	Stop			Free	Free	
Grade	0%			0%	0%	
Peak Hour Factor	0.92	0.92	0.92	0.92	0.92	0.92
Hourly flow rate (vph)	50	91	58	963	424	41
Pedestrians						
Lane Width (ft)						
Walking Speed (ft/s)						
Percent Blockage						
Right turn flare (veh)						
Median type				None	None	
Median storage veh)						
Upstream signal (ft)						
pX, platoon unblocked						
vC, conflicting volume	1021	212	424			
vC1, stage 1 conf vol						
vC2, stage 2 conf vol						
vCu, unblocked vol	1021	212	424			
tC, single (s)	6.8	6.9	4.1			
tC, 2 stage (s)						
tF (s)	3.5	3.3	2.2			
p0 queue free %	77	88	95			
cM capacity (veh/h)	221	793	1132			

Direction, Lane #	EB 1	EB 2	NB 1	NB 2	SB 1	SB 2	SB 3
Volume Total	50	91	379	642	212	212	41
Volume Left	50	0	58	0	0	0	0
Volume Right	0	91	0	0	0	0	41
cSH	221	793	1132	1700	1700	1700	1700
Volume to Capacity	0.23	0.12	0.05	0.38	0.12	0.12	0.02
Queue Length 95th (ft)	21	10	4	0	0	0	0
Control Delay (s)	26.0	10.1	1.7	0.0	0.0	0.0	0.0
Lane LOS	D	B	A				
Approach Delay (s)	15.8		0.6		0.0		
Approach LOS	C						

Intersection Summary			
Average Delay	1.8		
Intersection Capacity Utilization	50.1%	ICU Level of Service	A
Analysis Period (min)	15		

Movement	EBL	EBT	EBR	WBL	WBT	WBR	NBL	NBT	NBR	SBL	SBT	SBR
Lane Configurations												
Volume (vph)	167	641	49	92	460	263	38	291	119	311	191	86
Ideal Flow (vphpl)	1900	1900	1900	1900	1900	1900	1900	1900	1900	1900	1900	1900
Total Lost time (s)	7.0	7.0	7.0	7.0	7.0	7.0	7.0	7.0		7.0	7.0	7.0
Lane Util. Factor	1.00	1.00	1.00	1.00	1.00	1.00	1.00	0.95		1.00	0.95	1.00
Frt	1.00	1.00	0.85	1.00	1.00	0.85	1.00	0.96		1.00	1.00	0.85
Flt Protected	0.95	1.00	1.00	0.95	1.00	1.00	0.95	1.00		0.95	1.00	1.00
Satd. Flow (prot)	1770	1863	1583	1770	1863	1583	1770	3385		1770	3539	1583
Flt Permitted	0.25	1.00	1.00	0.10	1.00	1.00	0.62	1.00		0.23	1.00	1.00
Satd. Flow (perm)	460	1863	1583	183	1863	1583	1157	3385		427	3539	1583
Peak-hour factor, PHF	0.92	0.92	0.92	0.92	0.92	0.92	0.92	0.92	0.92	0.92	0.92	0.92
Adj. Flow (vph)	182	697	53	100	500	286	41	316	129	338	208	93
RTOR Reduction (vph)	0	0	31	0	0	55	0	41	0	0	0	61
Lane Group Flow (vph)	182	697	22	100	500	231	41	404	0	338	208	32
Turn Type	pm+pt		pm+ov	pm+pt		pm+ov	pm+pt			pm+pt		pm+ov
Protected Phases	7	4	5	3	8	1	5	2		1	6	7
Permitted Phases	4		4	8		8	2			6		6
Actuated Green, G (s)	46.7	41.7	44.9	44.7	40.7	57.7	21.5	18.3		42.3	32.1	37.1
Effective Green, g (s)	46.7	41.7	44.9	44.7	40.7	57.7	21.5	18.3		42.3	32.1	37.1
Actuated g/C Ratio	0.43	0.38	0.41	0.41	0.37	0.53	0.20	0.17		0.39	0.29	0.34
Clearance Time (s)	7.0	7.0	7.0	7.0	7.0	7.0	7.0	7.0		7.0	7.0	7.0
Vehicle Extension (s)	3.0	3.0	3.0	3.0	3.0	3.0	3.0	3.0		3.0	3.0	3.0
Lane Grp Cap (vph)	257	713	754	133	696	940	246	568		375	1042	640
v/s Ratio Prot	c0.03	c0.37	0.00	0.03	0.27	0.04	0.00	0.12		c0.14	0.06	0.00
v/s Ratio Perm	0.27		0.01	0.28		0.11	0.03			c0.21		0.02
v/c Ratio	0.71	0.98	0.03	0.75	0.72	0.25	0.17	0.71		0.90	0.20	0.05
Uniform Delay, d1	26.8	33.2	19.1	26.1	29.2	13.9	36.0	42.9		26.6	28.8	24.1
Progression Factor	1.00	1.00	1.00	1.00	1.00	1.00	1.00	1.00		1.00	1.00	1.00
Incremental Delay, d2	8.6	27.9	0.0	21.0	3.6	0.1	0.3	4.2		23.9	0.1	0.0
Delay (s)	35.4	61.0	19.1	47.1	32.8	14.0	36.3	47.1		50.5	28.9	24.2
Level of Service	D	E	B	D	C	B	D	D		D	C	C
Approach Delay (s)		53.7			28.4			46.1			39.6	
Approach LOS		D			C			D			D	

Intersection Summary			
HCM Average Control Delay	41.8	HCM Level of Service	D
HCM Volume to Capacity ratio	0.84		
Actuated Cycle Length (s)	109.0	Sum of lost time (s)	14.0
Intersection Capacity Utilization	91.2%	ICU Level of Service	F
Analysis Period (min)	15		
c Critical Lane Group			

Movement	EBL	EBR	NBL	NBT	SBT	SBR
Lane Configurations						
Sign Control	Stop			Stop	Stop	
Volume (vph)	4	19	40	29	55	9
Peak Hour Factor	0.92	0.92	0.92	0.92	0.92	0.92
Hourly flow rate (vph)	4	21	43	32	60	10

Direction, Lane #	EB 1	EB 2	NB 1	NB 2	SB 1	SB 2
Volume Total (vph)	4	21	43	32	60	10
Volume Left (vph)	4	0	43	0	0	0
Volume Right (vph)	0	21	0	0	0	10
Hadj (s)	0.93	-0.55	0.81	0.03	0.03	-0.33
Departure Headway (s)	5.8	4.3	5.4	4.6	4.7	4.3
Degree Utilization, x	0.01	0.02	0.07	0.04	0.08	0.01
Capacity (veh/h)	608	804	652	760	766	821
Control Delay (s)	7.6	6.2	7.6	6.6	6.8	6.1
Approach Delay (s)	6.4		7.2		6.7	
Approach LOS	A		A		A	

Intersection Summary			
Delay	6.9		
HCM Level of Service	A		
Intersection Capacity Utilization	18.9%	ICU Level of Service	A
Analysis Period (min)	15		

Movement	EBL	EBR	NBL	NBT	SBT	SBR
Lane Configurations						
Sign Control	Stop			Stop	Stop	
Volume (vph)	23	167	357	52	31	49
Peak Hour Factor	0.92	0.92	0.92	0.92	0.92	0.92
Hourly flow rate (vph)	25	182	388	57	34	53

Direction, Lane #	EB 1	EB 2	NB 1	NB 2	SB 1	SB 2
Volume Total (vph)	25	182	388	57	34	53
Volume Left (vph)	25	0	388	0	0	0
Volume Right (vph)	0	182	0	0	0	53
Hadj (s)	0.53	-0.67	0.53	0.22	0.10	-0.67
Departure Headway (s)	6.4	5.2	5.7	5.4	5.7	4.9
Degree Utilization, x	0.04	0.26	0.61	0.08	0.05	0.07
Capacity (veh/h)	523	644	611	644	596	689
Control Delay (s)	8.5	8.8	16.2	7.7	7.8	7.1
Approach Delay (s)	8.8		15.1		7.4	
Approach LOS	A		C		A	

Intersection Summary			
Delay	12.4		
HCM Level of Service	B		
Intersection Capacity Utilization	36.4%	ICU Level of Service	A
Analysis Period (min)	15		

Movement	EBL	EBT	WBT	WBR	SBL	SBR
Lane Configurations						
Volume (veh/h)	72	290	183	368	224	58
Sign Control		Free	Free		Stop	
Grade		0%	0%		0%	
Peak Hour Factor	0.92	0.92	0.92	0.92	0.92	0.92
Hourly flow rate (vph)	78	315	199	400	243	63
Pedestrians						
Lane Width (ft)						
Walking Speed (ft/s)						
Percent Blockage						
Right turn flare (veh)						12
Median type		None	None			
Median storage veh)						
Upstream signal (ft)						
pX, platoon unblocked						
vC, conflicting volume	599				671	199
vC1, stage 1 conf vol						
vC2, stage 2 conf vol						
vCu, unblocked vol	599				671	199
tC, single (s)	4.1				6.4	6.2
tC, 2 stage (s)						
tF (s)	2.2				3.5	3.3
p0 queue free %	92				37	93
cM capacity (veh/h)	978				388	842

Direction, Lane #	EB 1	WB 1	WB 2	SB 1
Volume Total	393	199	400	307
Volume Left	78	0	0	243
Volume Right	0	0	400	63
cSH	978	1700	1700	489
Volume to Capacity	0.08	0.12	0.24	0.63
Queue Length 95th (ft)	7	0	0	106
Control Delay (s)	2.5	0.0	0.0	24.7
Lane LOS	A			C
Approach Delay (s)	2.5	0.0		24.7
Approach LOS				C

Intersection Summary			
Average Delay	6.6		
Intersection Capacity Utilization	51.3%	ICU Level of Service	A
Analysis Period (min)	15		

HCM Signalized Intersection Capacity Analysis
100: Route 50 & Goshen Road

LCPS (HS 7)
2015 Future Background

Movement	EBL	EBT	EBR	WBL	WBT	WBR	NBL	NBT	NBR	SBL	SBT	SBR
Lane Configurations												
Volume (vph)	1	402	43	51	1293	5	37	1	63	1	8	5
Ideal Flow (vphpl)	1900	1900	1900	1900	1900	1900	1900	1900	1900	1900	1900	1900
Total Lost time (s)	7.0	7.0	7.0	7.0	7.0	7.0		7.0			7.0	
Lane Util. Factor	1.00	0.95	1.00	1.00	0.95	1.00		1.00			1.00	
Frt	1.00	1.00	0.85	1.00	1.00	0.85		0.92			0.95	
Flt Protected	0.95	1.00	1.00	0.95	1.00	1.00		0.98			1.00	
Satd. Flow (prot)	1770	3505	1583	1770	3343	1583		1663			1773	
Flt Permitted	0.95	1.00	1.00	0.95	1.00	1.00		0.87			0.97	
Satd. Flow (perm)	1770	3505	1583	1770	3343	1583		1478			1730	
Peak-hour factor, PHF	0.92	0.92	0.92	0.92	0.92	0.92	0.92	0.92	0.92	0.92	0.92	0.92
Adj. Flow (vph)	1	437	47	55	1405	5	40	1	68	1	9	5
RTOR Reduction (vph)	0	0	25	0	0	1	0	33	0	0	4	0
Lane Group Flow (vph)	1	437	22	55	1405	4	0	76	0	0	11	0
Heavy Vehicles (%)	2%	3%	2%	2%	8%	2%	4%	2%	2%	2%	2%	2%
Turn Type	Prot		Perm	Prot		Perm	Perm			Perm		
Protected Phases	5	2		1	6			8			4	
Permitted Phases			2			6	8			4		
Actuated Green, G (s)	0.7	32.2	32.2	4.9	36.4	36.4		9.8			9.8	
Effective Green, g (s)	0.7	32.2	32.2	4.9	36.4	36.4		9.8			9.8	
Actuated g/C Ratio	0.01	0.47	0.47	0.07	0.54	0.54		0.14			0.14	
Clearance Time (s)	7.0	7.0	7.0	7.0	7.0	7.0		7.0			7.0	
Vehicle Extension (s)	3.0	3.0	3.0	3.0	3.0	3.0		3.0			3.0	
Lane Grp Cap (vph)	18	1662	751	128	1792	849		213			250	
v/s Ratio Prot	0.00	0.12		c0.03	c0.42							
v/s Ratio Perm			0.01			0.00		c0.05			0.01	
v/c Ratio	0.06	0.26	0.03	0.43	0.78	0.00		0.36			0.04	
Uniform Delay, d1	33.3	10.7	9.5	30.2	12.6	7.3		26.2			25.0	
Progression Factor	1.00	1.00	1.00	1.00	1.00	1.00		1.00			1.00	
Incremental Delay, d2	1.3	0.1	0.0	2.3	2.3	0.0		1.0			0.1	
Delay (s)	34.6	10.8	9.5	32.5	14.9	7.3		27.3			25.1	
Level of Service	C	B	A	C	B	A		C			C	
Approach Delay (s)		10.7			15.6			27.3			25.1	
Approach LOS		B			B			C			C	

Intersection Summary			
HCM Average Control Delay	15.1	HCM Level of Service	B
HCM Volume to Capacity ratio	0.73		
Actuated Cycle Length (s)	67.9	Sum of lost time (s)	21.0
Intersection Capacity Utilization	66.7%	ICU Level of Service	C
Analysis Period (min)	15		

c Critical Lane Group

HCM Unsignalized Intersection Capacity Analysis
200: Tall Cedars Pkwy & West Spine Road

LCPS (HS 7)
2015 Future Background

Movement	EBL	EBR	NBL	NBT	SBT	SBR
Lane Configurations						
Volume (veh/h)	31	78	67	437	780	64
Sign Control	Stop			Free	Free	
Grade	0%			0%	0%	
Peak Hour Factor	0.92	0.92	0.92	0.92	0.92	0.92
Hourly flow rate (vph)	34	85	73	475	848	70
Pedestrians						
Lane Width (ft)						
Walking Speed (ft/s)						
Percent Blockage						
Right turn flare (veh)						
Median type				None	None	
Median storage veh)						
Upstream signal (ft)						
pX, platoon unblocked						
vC, conflicting volume	1231	424	848			
vC1, stage 1 conf vol						
vC2, stage 2 conf vol						
vCu, unblocked vol	1231	424	848			
tC, single (s)	6.8	6.9	4.1			
tC, 2 stage (s)						
tF (s)	3.5	3.3	2.2			
p0 queue free %	78	85	91			
cM capacity (veh/h)	154	579	785			

Direction, Lane #	EB 1	EB 2	NB 1	NB 2	SB 1	SB 2	SB 3
Volume Total	34	85	231	317	424	424	70
Volume Left	34	0	73	0	0	0	0
Volume Right	0	85	0	0	0	0	70
cSH	154	579	785	1700	1700	1700	1700
Volume to Capacity	0.22	0.15	0.09	0.19	0.25	0.25	0.04
Queue Length 95th (ft)	20	13	8	0	0	0	0
Control Delay (s)	34.8	12.3	3.9	0.0	0.0	0.0	0.0
Lane LOS	D	B	A				
Approach Delay (s)	18.7		1.6		0.0		
Approach LOS	C						

Intersection Summary			
Average Delay	2.0		
Intersection Capacity Utilization	48.9%	ICU Level of Service	A
Analysis Period (min)	15		

Movement	EBL	EBT	EBR	WBL	WBT	WBR	NBL	NBT	NBR	SBL	SBT	SBR
Lane Configurations												
Volume (vph)	136	329	54	144	325	150	42	183	65	133	338	117
Ideal Flow (vphpl)	1900	1900	1900	1900	1900	1900	1900	1900	1900	1900	1900	1900
Total Lost time (s)	7.0	7.0	7.0	7.0	7.0	7.0	7.0	7.0		7.0	7.0	7.0
Lane Util. Factor	1.00	1.00	1.00	1.00	1.00	1.00	1.00	0.95		1.00	0.95	1.00
Frt	1.00	1.00	0.85	1.00	1.00	0.85	1.00	0.96		1.00	1.00	0.85
Flt Protected	0.95	1.00	1.00	0.95	1.00	1.00	0.95	1.00		0.95	1.00	1.00
Satd. Flow (prot)	1770	1863	1583	1770	1863	1583	1770	3400		1770	3539	1583
Flt Permitted	0.34	1.00	1.00	0.35	1.00	1.00	0.53	1.00		0.43	1.00	1.00
Satd. Flow (perm)	639	1863	1583	653	1863	1583	993	3400		793	3539	1583
Peak-hour factor, PHF	0.92	0.92	0.92	0.92	0.92	0.92	0.92	0.92	0.92	0.92	0.92	0.92
Adj. Flow (vph)	148	358	59	157	353	163	46	199	71	145	367	127
RTOR Reduction (vph)	0	0	41	0	0	105	0	34	0	0	0	83
Lane Group Flow (vph)	148	358	18	157	353	58	46	236	0	145	367	44
Turn Type	pm+pt		pm+ov	pm+pt		pm+ov	pm+pt			pm+pt		pm+ov
Protected Phases	7	4	5	3	8	1	5	2		1	6	7
Permitted Phases	4		4	8		8	2			6		6
Actuated Green, G (s)	29.8	20.1	23.2	29.2	19.8	27.7	15.9	12.8		25.5	17.6	27.3
Effective Green, g (s)	29.8	20.1	23.2	29.2	19.8	27.7	15.9	12.8		25.5	17.6	27.3
Actuated g/C Ratio	0.38	0.26	0.30	0.37	0.25	0.35	0.20	0.16		0.33	0.23	0.35
Clearance Time (s)	7.0	7.0	7.0	7.0	7.0	7.0	7.0	7.0		7.0	7.0	7.0
Vehicle Extension (s)	3.0	3.0	3.0	3.0	3.0	3.0	3.0	3.0		3.0	3.0	3.0
Lane Grp Cap (vph)	384	479	611	378	472	702	233	557		357	797	694
v/s Ratio Prot	0.05	c0.19	0.00	c0.05	0.19	0.01	0.01	0.07		c0.04	c0.10	0.01
v/s Ratio Perm	0.10		0.01	0.11		0.03	0.03			0.09		0.02
v/c Ratio	0.39	0.75	0.03	0.42	0.75	0.08	0.20	0.42		0.41	0.46	0.06
Uniform Delay, d1	16.8	26.7	19.5	17.2	26.9	16.8	25.5	29.4		19.5	26.2	16.9
Progression Factor	1.00	1.00	1.00	1.00	1.00	1.00	1.00	1.00		1.00	1.00	1.00
Incremental Delay, d2	0.6	6.3	0.0	0.7	6.4	0.1	0.4	0.5		0.8	0.4	0.0
Delay (s)	17.4	33.0	19.5	18.0	33.3	16.8	25.9	29.9		20.3	26.6	17.0
Level of Service	B	C	B	B	C	B	C	C		C	C	B
Approach Delay (s)		27.5			25.7			29.3			23.3	
Approach LOS		C			C			C			C	

Intersection Summary			
HCM Average Control Delay	26.0	HCM Level of Service	C
HCM Volume to Capacity ratio	0.53		
Actuated Cycle Length (s)	78.2	Sum of lost time (s)	21.0
Intersection Capacity Utilization	63.1%	ICU Level of Service	B
Analysis Period (min)	15		

c Critical Lane Group

Movement	EBL	EBR	NBL	NBT	SBT	SBR
Lane Configurations						
Sign Control	Stop			Stop	Stop	
Volume (vph)	6	27	13	37	19	3
Peak Hour Factor	0.92	0.92	0.92	0.92	0.92	0.92
Hourly flow rate (vph)	7	29	14	40	21	3

Direction, Lane #	EB 1	EB 2	NB 1	NB 2	SB 1	SB 2
Volume Total (vph)	7	29	14	40	21	3
Volume Left (vph)	7	0	14	0	0	0
Volume Right (vph)	0	29	0	0	0	3
Hadj (s)	2.20	-0.26	1.40	0.03	0.03	-0.14
Departure Headway (s)	6.9	4.4	6.0	4.6	4.7	4.5
Degree Utilization, x	0.01	0.04	0.02	0.05	0.03	0.00
Capacity (veh/h)	506	789	587	759	761	782
Control Delay (s)	8.8	6.4	8.0	6.7	6.6	6.3
Approach Delay (s)	6.8		7.0		6.6	
Approach LOS	A		A		A	

Intersection Summary			
Delay	6.9		
HCM Level of Service	A		
Intersection Capacity Utilization	17.4%	ICU Level of Service	A
Analysis Period (min)	15		

Movement	EBL	EBR	NBL	NBT	SBT	SBR
Lane Configurations						
Sign Control	Stop			Stop	Stop	
Volume (vph)	33	242	120	17	30	16
Peak Hour Factor	0.92	0.92	0.92	0.92	0.92	0.92
Hourly flow rate (vph)	36	263	130	18	33	17

Direction, Lane #	EB 1	EB 2	NB 1	NB 2	SB 1	SB 2
Volume Total (vph)	36	263	130	18	33	17
Volume Left (vph)	36	0	130	0	0	0
Volume Right (vph)	0	263	0	0	0	17
Hadj (s)	0.53	-0.67	0.53	0.20	0.39	-0.67
Departure Headway (s)	5.6	4.4	5.8	5.5	5.8	4.7
Degree Utilization, x	0.06	0.32	0.21	0.03	0.05	0.02
Capacity (veh/h)	616	792	593	623	584	711
Control Delay (s)	7.7	8.2	9.1	7.4	7.9	6.6
Approach Delay (s)	8.2		8.9		7.5	
Approach LOS	A		A		A	

Intersection Summary			
Delay	8.3		
HCM Level of Service	A		
Intersection Capacity Utilization	25.0%	ICU Level of Service	A
Analysis Period (min)	15		

Movement	EBL	EBT	WBT	WBR	SBL	SBR
Lane Configurations						
Volume (veh/h)	49	130	190	173	266	58
Sign Control		Free	Free		Stop	
Grade		0%	0%		0%	
Peak Hour Factor	0.92	0.92	0.92	0.92	0.92	0.92
Hourly flow rate (vph)	53	141	207	188	289	63
Pedestrians						
Lane Width (ft)						
Walking Speed (ft/s)						
Percent Blockage						
Right turn flare (veh)						12
Median type		None	None			
Median storage veh)						
Upstream signal (ft)						
pX, platoon unblocked						
vC, conflicting volume	395				454	207
vC1, stage 1 conf vol						
vC2, stage 2 conf vol						
vCu, unblocked vol	395				454	207
tC, single (s)	4.1				6.4	6.2
tC, 2 stage (s)						
tF (s)	2.2				3.5	3.3
p0 queue free %	95				46	92
cM capacity (veh/h)	1164				538	834

Direction, Lane #	EB 1	WB 1	WB 2	SB 1
Volume Total	195	207	188	352
Volume Left	53	0	0	289
Volume Right	0	0	188	63
cSH	1164	1700	1700	655
Volume to Capacity	0.05	0.12	0.11	0.54
Queue Length 95th (ft)	4	0	0	80
Control Delay (s)	2.6	0.0	0.0	17.5
Lane LOS	A			C
Approach Delay (s)	2.6	0.0		17.5
Approach LOS				C

Intersection Summary			
Average Delay	7.1		
Intersection Capacity Utilization	44.3%	ICU Level of Service	A
Analysis Period (min)	15		

APPENDIX K-3

INTERSECTION CAPACITY ANALYSIS RESULTS– FUTURE CONDITIONS WITHOUT PROPOSED DEVELOPMENT (2015) – ES PEAK, ALTERNATIVE 1

HCM Signalized Intersection Capacity Analysis
100: Route 50 & Goshen Road

LCPS (HS 7)
2015 Future Background

Movement	EBL	EBT	EBR	WBL	WBT	WBR	NBL	NBT	NBR	SBL	SBT	SBR
Lane Configurations												
Volume (vph)	16	1277	23	51	388	14	35	16	47	6	1	0
Ideal Flow (vphpl)	1900	1900	1900	1900	1900	1900	1900	1900	1900	1900	1900	1900
Total Lost time (s)	7.0	7.0	7.0	7.0	7.0	7.0		7.0			7.0	
Lane Util. Factor	1.00	0.95	1.00	1.00	0.95	1.00		1.00			1.00	
Frt	1.00	1.00	0.85	1.00	1.00	0.85		0.94			1.00	
Flt Protected	0.95	1.00	1.00	0.95	1.00	1.00		0.98			0.96	
Satd. Flow (prot)	1770	3505	1524	1752	3343	1583		1687			1785	
Flt Permitted	0.95	1.00	1.00	0.95	1.00	1.00		0.88			0.79	
Satd. Flow (perm)	1770	3505	1524	1752	3343	1583		1508			1463	
Peak-hour factor, PHF	0.92	0.92	0.92	0.92	0.92	0.92	0.92	0.92	0.92	0.92	0.92	0.92
Adj. Flow (vph)	17	1388	25	55	422	15	38	17	51	7	1	0
RTOR Reduction (vph)	0	0	9	0	0	6	0	18	0	0	0	0
Lane Group Flow (vph)	17	1388	16	55	422	9	0	88	0	0	8	0
Heavy Vehicles (%)	2%	3%	6%	3%	8%	2%	6%	2%	2%	2%	2%	2%
Turn Type	Prot		Perm	Prot		Perm	Perm			Perm		
Protected Phases	5	2		1	6			8			4	
Permitted Phases			2			6	8			4		
Actuated Green, G (s)	2.4	46.0	46.0	6.6	50.2	50.2		11.0			11.0	
Effective Green, g (s)	2.4	46.0	46.0	6.6	50.2	50.2		11.0			11.0	
Actuated g/C Ratio	0.03	0.54	0.54	0.08	0.59	0.59		0.13			0.13	
Clearance Time (s)	7.0	7.0	7.0	7.0	7.0	7.0		7.0			7.0	
Vehicle Extension (s)	3.0	3.0	3.0	3.0	3.0	3.0		3.0			3.0	
Lane Grp Cap (vph)	50	1906	829	137	1984	939		196			190	
v/s Ratio Prot	0.01	c0.40		c0.03	c0.13							
v/s Ratio Perm			0.01			0.01		c0.06			0.01	
v/c Ratio	0.34	0.73	0.02	0.40	0.21	0.01		0.45			0.04	
Uniform Delay, d1	40.3	14.6	8.9	37.1	8.0	7.0		34.0			32.2	
Progression Factor	1.00	1.00	1.00	1.00	1.00	1.00		1.00			1.00	
Incremental Delay, d2	4.0	1.4	0.0	1.9	0.1	0.0		1.6			0.1	
Delay (s)	44.3	16.0	8.9	39.0	8.1	7.0		35.6			32.3	
Level of Service	D	B	A	D	A	A		D			C	
Approach Delay (s)		16.2			11.5			35.6			32.3	
Approach LOS		B			B			D			C	

Intersection Summary			
HCM Average Control Delay	16.1	HCM Level of Service	B
HCM Volume to Capacity ratio	0.73		
Actuated Cycle Length (s)	84.6	Sum of lost time (s)	28.0
Intersection Capacity Utilization	59.4%	ICU Level of Service	B
Analysis Period (min)	15		

c Critical Lane Group

HCM Unsignalized Intersection Capacity Analysis
200: Tall Cedars Pkwy & West Spine Road

LCPS (HS 7)
2015 Future Background

Movement	EBL	EBR	NBL	NBT	SBT	SBR
Lane Configurations						
Volume (veh/h)	59	94	87	823	312	51
Sign Control	Stop			Free	Free	
Grade	0%			0%	0%	
Peak Hour Factor	0.92	0.92	0.92	0.92	0.92	0.92
Hourly flow rate (vph)	64	102	95	895	339	55
Pedestrians						
Lane Width (ft)						
Walking Speed (ft/s)						
Percent Blockage						
Right turn flare (veh)						
Median type				None	None	
Median storage veh)						
Upstream signal (ft)						
pX, platoon unblocked						
vC, conflicting volume	976	170	339			
vC1, stage 1 conf vol						
vC2, stage 2 conf vol						
vCu, unblocked vol	976	170	339			
tC, single (s)	6.8	6.9	4.1			
tC, 2 stage (s)						
tF (s)	3.5	3.3	2.2			
p0 queue free %	72	88	92			
cM capacity (veh/h)	229	845	1217			

Direction, Lane #	EB 1	EB 2	NB 1	NB 2	SB 1	SB 2	SB 3
Volume Total	64	102	393	596	170	170	55
Volume Left	64	0	95	0	0	0	0
Volume Right	0	102	0	0	0	0	55
cSH	229	845	1217	1700	1700	1700	1700
Volume to Capacity	0.28	0.12	0.08	0.35	0.10	0.10	0.03
Queue Length 95th (ft)	28	10	6	0	0	0	0
Control Delay (s)	26.7	9.8	2.6	0.0	0.0	0.0	0.0
Lane LOS	D	A	A				
Approach Delay (s)	16.3		1.0		0.0		
Approach LOS	C						

Intersection Summary			
Average Delay	2.4		
Intersection Capacity Utilization	47.2%	ICU Level of Service	A
Analysis Period (min)	15		

HCM Signalized Intersection Capacity Analysis
300: Braddock Road & Gum Spring Road

LCPS (HS 7)
2015 Future Background

Movement	EBL	EBT	EBR	WBL	WBT	WBR	NBL	NBT	NBR	SBL	SBT	SBR
Lane Configurations												
Volume (vph)	160	398	37	72	163	154	46	327	152	253	170	80
Ideal Flow (vphpl)	1900	1900	1900	1900	1900	1900	1900	1900	1900	1900	1900	1900
Total Lost time (s)	7.0	7.0	7.0	7.0	7.0	7.0	7.0	7.0		7.0	7.0	7.0
Lane Util. Factor	1.00	1.00	1.00	1.00	1.00	1.00	1.00	0.95		1.00	0.95	1.00
Frt	1.00	1.00	0.85	1.00	1.00	0.85	1.00	0.95		1.00	1.00	0.85
Flt Protected	0.95	1.00	1.00	0.95	1.00	1.00	0.95	1.00		0.95	1.00	1.00
Satd. Flow (prot)	1770	1863	1583	1770	1863	1583	1770	3371		1770	3539	1583
Flt Permitted	0.59	1.00	1.00	0.29	1.00	1.00	0.64	1.00		0.23	1.00	1.00
Satd. Flow (perm)	1096	1863	1583	535	1863	1583	1183	3371		421	3539	1583
Peak-hour factor, PHF	0.92	0.92	0.92	0.92	0.92	0.92	0.92	0.92	0.92	0.92	0.92	0.92
Adj. Flow (vph)	174	433	40	78	177	167	50	355	165	275	185	87
RTOR Reduction (vph)	0	0	27	0	0	81	0	48	0	0	0	53
Lane Group Flow (vph)	174	433	13	78	177	86	50	472	0	275	185	34
Turn Type	pm+pt		pm+ov	pm+pt		pm+ov	pm+pt			pm+pt		pm+ov
Protected Phases	7	4	5	3	8	1	5	2		1	6	7
Permitted Phases	4		4	8		8	2			6		6
Actuated Green, G (s)	32.9	27.7	30.7	28.5	25.5	40.0	21.8	18.8		40.3	30.3	35.5
Effective Green, g (s)	32.9	27.7	30.7	28.5	25.5	40.0	21.8	18.8		40.3	30.3	35.5
Actuated g/C Ratio	0.36	0.30	0.33	0.31	0.28	0.43	0.24	0.20		0.44	0.33	0.39
Clearance Time (s)	7.0	7.0	7.0	7.0	7.0	7.0	7.0	7.0		7.0	7.0	7.0
Vehicle Extension (s)	3.0	3.0	3.0	3.0	3.0	3.0	3.0	3.0		3.0	3.0	3.0
Lane Grp Cap (vph)	430	561	649	206	516	809	299	689		397	1166	731
v/s Ratio Prot	c0.02	c0.23	0.00	0.01	0.10	0.02	0.01	0.14		c0.11	0.05	0.00
v/s Ratio Perm	0.12		0.01	0.10		0.04	0.03			c0.19		0.02
v/c Ratio	0.40	0.77	0.02	0.38	0.34	0.11	0.17	0.69		0.69	0.16	0.05
Uniform Delay, d1	21.5	29.3	20.6	23.7	26.6	15.4	27.6	33.9		18.6	21.8	17.7
Progression Factor	1.00	1.00	1.00	1.00	1.00	1.00	1.00	1.00		1.00	1.00	1.00
Incremental Delay, d2	0.6	6.5	0.0	1.2	0.4	0.1	0.3	2.8		5.2	0.1	0.0
Delay (s)	22.1	35.8	20.6	24.8	27.0	15.5	27.8	36.7		23.7	21.9	17.7
Level of Service	C	D	C	C	C	B	C	D		C	C	B
Approach Delay (s)		31.2			22.0			35.9			22.2	
Approach LOS		C			C			D			C	

Intersection Summary			
HCM Average Control Delay	28.4	HCM Level of Service	C
HCM Volume to Capacity ratio	0.63		
Actuated Cycle Length (s)	92.0	Sum of lost time (s)	14.0
Intersection Capacity Utilization	76.2%	ICU Level of Service	D
Analysis Period (min)	15		
c Critical Lane Group			

HCM Unsignalized Intersection Capacity Analysis
600: Road A & North Star Blvd.

LCPS (HS 7)
2015 Future Background

Movement	EBL	EBR	NBL	NBT	SBT	SBR
Lane Configurations						
Sign Control	Stop			Stop	Stop	
Volume (vph)	2	3	7	22	39	5
Peak Hour Factor	0.92	0.92	0.92	0.92	0.92	0.92
Hourly flow rate (vph)	2	3	8	24	42	5

Direction, Lane #	EB 1	EB 2	NB 1	NB 2	SB 1	SB 2
Volume Total (vph)	2	3	8	24	42	5
Volume Left (vph)	2	0	8	0	0	0
Volume Right (vph)	0	3	0	0	0	5
Hadj (s)	1.77	-0.14	1.71	0.03	0.03	0.66
Departure Headway (s)	6.5	4.5	6.3	4.6	4.6	5.2
Degree Utilization, x	0.00	0.00	0.01	0.03	0.05	0.01
Capacity (veh/h)	538	768	566	773	783	681
Control Delay (s)	8.3	6.4	8.1	6.5	6.6	7.0
Approach Delay (s)	7.1		6.9		6.7	
Approach LOS	A		A		A	

Intersection Summary			
Delay	6.8		
HCM Level of Service	A		
Intersection Capacity Utilization	15.8%	ICU Level of Service	A
Analysis Period (min)	15		

Movement	EBL	EBR	NBL	NBT	SBT	SBR
Lane Configurations						
Sign Control	Stop			Stop	Stop	
Volume (vph)	16	28	60	13	9	33
Peak Hour Factor	0.92	0.92	0.92	0.92	0.92	0.92
Hourly flow rate (vph)	17	30	65	14	10	36

Direction, Lane #	EB 1	EB 2	NB 1	NB 2	SB 1	SB 2
Volume Total (vph)	17	30	65	14	10	36
Volume Left (vph)	17	0	65	0	0	0
Volume Right (vph)	0	30	0	0	0	36
Hadj (s)	0.53	-0.67	0.53	0.65	0.19	-0.67
Departure Headway (s)	5.3	4.1	5.2	5.3	4.9	4.0
Degree Utilization, x	0.03	0.03	0.09	0.02	0.01	0.04
Capacity (veh/h)	658	838	680	665	729	874
Control Delay (s)	7.3	6.1	7.5	7.2	6.7	6.0
Approach Delay (s)	6.5		7.5		6.1	
Approach LOS	A		A		A	

Intersection Summary			
Delay	6.8		
HCM Level of Service	A		
Intersection Capacity Utilization	20.0%	ICU Level of Service	A
Analysis Period (min)	15		

Movement	EBL	EBT	WBT	WBR	SBL	SBR
Lane Configurations						
Volume (veh/h)	49	219	92	70	83	41
Sign Control		Free	Free		Stop	
Grade		0%	0%		0%	
Peak Hour Factor	0.92	0.92	0.92	0.92	0.92	0.92
Hourly flow rate (vph)	53	238	100	76	90	45
Pedestrians						
Lane Width (ft)						
Walking Speed (ft/s)						
Percent Blockage						
Right turn flare (veh)						12
Median type		None	None			
Median storage veh)						
Upstream signal (ft)						
pX, platoon unblocked						
vC, conflicting volume	176				445	100
vC1, stage 1 conf vol						
vC2, stage 2 conf vol						
vCu, unblocked vol	176				445	100
tC, single (s)	4.1				6.4	6.2
tC, 2 stage (s)						
tF (s)	2.2				3.5	3.3
p0 queue free %	96				84	95
cM capacity (veh/h)	1400				549	956

Direction, Lane #	EB 1	WB 1	WB 2	SB 1
Volume Total	291	100	76	135
Volume Left	53	0	0	90
Volume Right	0	0	76	45
cSH	1400	1700	1700	821
Volume to Capacity	0.04	0.06	0.04	0.16
Queue Length 95th (ft)	3	0	0	15
Control Delay (s)	1.7	0.0	0.0	11.6
Lane LOS	A			B
Approach Delay (s)	1.7	0.0		11.6
Approach LOS				B

Intersection Summary			
Average Delay	3.4		
Intersection Capacity Utilization	32.2%	ICU Level of Service	A
Analysis Period (min)	15		

HCM Signalized Intersection Capacity Analysis
100: Route 50 & Goshen Road

LCPS (HS 7)
2015 Future Background

Movement	EBL	EBT	EBR	WBL	WBT	WBR	NBL	NBT	NBR	SBL	SBT	SBR
Lane Configurations												
Volume (vph)	5	435	32	40	850	2	23	1	43	1	3	2
Ideal Flow (vphpl)	1900	1900	1900	1900	1900	1900	1900	1900	1900	1900	1900	1900
Total Lost time (s)	7.0	7.0	7.0	7.0	7.0	7.0		7.0			7.0	
Lane Util. Factor	1.00	0.95	1.00	1.00	0.95	1.00		1.00			1.00	
Frt	1.00	1.00	0.85	1.00	1.00	0.85		0.91			0.95	
Flt Protected	0.95	1.00	1.00	0.95	1.00	1.00		0.98			0.99	
Satd. Flow (prot)	1770	3505	1583	1752	3343	1583		1651			1764	
Flt Permitted	0.95	1.00	1.00	0.95	1.00	1.00		0.88			0.92	
Satd. Flow (perm)	1770	3505	1583	1752	3343	1583		1484			1645	
Peak-hour factor, PHF	0.92	0.92	0.92	0.92	0.92	0.92	0.92	0.92	0.92	0.92	0.92	0.92
Adj. Flow (vph)	5	473	35	43	924	2	25	1	47	1	3	2
RTOR Reduction (vph)	0	0	22	0	0	1	0	35	0	0	2	0
Lane Group Flow (vph)	5	473	13	43	924	1	0	38	0	0	4	0
Heavy Vehicles (%)	2%	3%	2%	3%	8%	2%	2%	2%	4%	2%	2%	2%
Turn Type	Prot		Perm	Prot		Perm	Perm			Perm		
Protected Phases	5	2		1	6			8			4	
Permitted Phases			2			6	8			4		
Actuated Green, G (s)	0.8	18.8	18.8	2.5	20.5	20.5		7.1			7.1	
Effective Green, g (s)	0.8	18.8	18.8	2.5	20.5	20.5		7.1			7.1	
Actuated g/C Ratio	0.02	0.38	0.38	0.05	0.41	0.41		0.14			0.14	
Clearance Time (s)	7.0	7.0	7.0	7.0	7.0	7.0		7.0			7.0	
Vehicle Extension (s)	3.0	3.0	3.0	3.0	3.0	3.0		3.0			3.0	
Lane Grp Cap (vph)	29	1334	602	89	1387	657		213			236	
v/s Ratio Prot	0.00	0.13		c0.02	c0.28							
v/s Ratio Perm			0.01			0.00		c0.03			0.00	
v/c Ratio	0.17	0.35	0.02	0.48	0.67	0.00		0.18			0.02	
Uniform Delay, d1	24.0	11.0	9.6	22.8	11.7	8.5		18.6			18.2	
Progression Factor	1.00	1.00	1.00	1.00	1.00	1.00		1.00			1.00	
Incremental Delay, d2	2.8	0.2	0.0	4.1	1.2	0.0		0.4			0.0	
Delay (s)	26.8	11.1	9.6	26.9	12.9	8.5		19.0			18.2	
Level of Service	C	B	A	C	B	A		B			B	
Approach Delay (s)		11.2			13.5			19.0			18.2	
Approach LOS		B			B			B			B	

Intersection Summary				
HCM Average Control Delay	13.0	HCM Level of Service	B	
HCM Volume to Capacity ratio	0.46			
Actuated Cycle Length (s)	49.4	Sum of lost time (s)	14.0	
Intersection Capacity Utilization	51.7%	ICU Level of Service	A	
Analysis Period (min)	15			

c Critical Lane Group

HCM Unsignalized Intersection Capacity Analysis
200: Tall Cedars Pkwy & West Spine Road

LCPS (HS 7)
2015 Future Background

Movement	EBL	EBR	NBL	NBT	SBT	SBR
Lane Configurations						
Volume (veh/h)	35	84	64	428	670	57
Sign Control	Stop			Free	Free	
Grade	0%			0%	0%	
Peak Hour Factor	0.92	0.92	0.92	0.92	0.92	0.92
Hourly flow rate (vph)	38	91	70	465	728	62
Pedestrians						
Lane Width (ft)						
Walking Speed (ft/s)						
Percent Blockage						
Right turn flare (veh)						
Median type				None	None	
Median storage veh)						
Upstream signal (ft)						
pX, platoon unblocked						
vC, conflicting volume	1100	364	728			
vC1, stage 1 conf vol						
vC2, stage 2 conf vol						
vCu, unblocked vol	1100	364	728			
tC, single (s)	6.9	6.9	4.1			
tC, 2 stage (s)						
tF (s)	3.5	3.3	2.2			
p0 queue free %	80	86	92			
cM capacity (veh/h)	189	633	871			

Direction, Lane #	EB 1	EB 2	NB 1	NB 2	SB 1	SB 2	SB 3
Volume Total	38	91	225	310	364	364	62
Volume Left	38	0	70	0	0	0	0
Volume Right	0	91	0	0	0	0	62
cSH	189	633	871	1700	1700	1700	1700
Volume to Capacity	0.20	0.14	0.08	0.18	0.21	0.21	0.04
Queue Length 95th (ft)	18	13	6	0	0	0	0
Control Delay (s)	28.9	11.6	3.5	0.0	0.0	0.0	0.0
Lane LOS	D	B	A				
Approach Delay (s)	16.7		1.5		0.0		
Approach LOS	C						

Intersection Summary			
Average Delay	2.0		
Intersection Capacity Utilization	45.5%	ICU Level of Service	A
Analysis Period (min)	15		

HCM Signalized Intersection Capacity Analysis
300: Braddock Road & Gum Spring Road

LCPS (HS 7)
2015 Future Background

Movement	EBL	EBT	EBR	WBL	WBT	WBR	NBL	NBT	NBR	SBL	SBT	SBR
Lane Configurations												
Volume (vph)	119	209	45	90	316	158	36	179	51	128	290	111
Ideal Flow (vphpl)	1900	1900	1900	1900	1900	1900	1900	1900	1900	1900	1900	1900
Total Lost time (s)	7.0	7.0	7.0	7.0	7.0	7.0	7.0	7.0		7.0	7.0	7.0
Lane Util. Factor	1.00	1.00	1.00	1.00	1.00	1.00	1.00	0.95		1.00	0.95	1.00
Frt	1.00	1.00	0.85	1.00	1.00	0.85	1.00	0.97		1.00	1.00	0.85
Flt Protected	0.95	1.00	1.00	0.95	1.00	1.00	0.95	1.00		0.95	1.00	1.00
Satd. Flow (prot)	1770	1863	1583	1770	1863	1583	1770	3422		1770	3539	1583
Flt Permitted	0.33	1.00	1.00	0.62	1.00	1.00	0.56	1.00		0.43	1.00	1.00
Satd. Flow (perm)	607	1863	1583	1149	1863	1583	1044	3422		798	3539	1583
Peak-hour factor, PHF	0.92	0.92	0.92	0.92	0.92	0.92	0.92	0.92	0.92	0.92	0.92	0.92
Adj. Flow (vph)	129	227	49	98	343	172	39	195	55	139	315	121
RTOR Reduction (vph)	0	0	32	0	0	109	0	24	0	0	0	80
Lane Group Flow (vph)	129	227	17	98	343	63	39	226	0	139	315	41
Turn Type	pm+pt		pm+ov	pm+pt		pm+ov	pm+pt			pm+pt		pm+ov
Protected Phases	7	4	5	3	8	1	5	2		1	6	7
Permitted Phases	4		4	8		8	2			6		6
Actuated Green, G (s)	33.7	24.0	27.1	27.1	20.7	28.6	15.3	12.2		24.9	17.0	26.7
Effective Green, g (s)	33.7	24.0	27.1	27.1	20.7	28.6	15.3	12.2		24.9	17.0	26.7
Actuated g/C Ratio	0.43	0.31	0.35	0.35	0.26	0.36	0.19	0.16		0.32	0.22	0.34
Clearance Time (s)	7.0	7.0	7.0	7.0	7.0	7.0	7.0	7.0		7.0	7.0	7.0
Vehicle Extension (s)	3.0	3.0	3.0	3.0	3.0	3.0	3.0	3.0		3.0	3.0	3.0
Lane Grp Cap (vph)	404	570	688	447	491	718	232	532		351	766	680
v/s Ratio Prot	c0.04	c0.12	0.00	0.02	c0.18	0.01	0.01	0.07		c0.04	c0.09	0.01
v/s Ratio Perm	0.10		0.01	0.06		0.03	0.03			0.09		0.02
v/c Ratio	0.32	0.40	0.02	0.22	0.70	0.09	0.17	0.42		0.40	0.41	0.06
Uniform Delay, d1	14.5	21.5	17.0	17.8	26.1	16.4	26.0	30.0		20.0	26.4	17.4
Progression Factor	1.00	1.00	1.00	1.00	1.00	1.00	1.00	1.00		1.00	1.00	1.00
Incremental Delay, d2	0.5	0.5	0.0	0.2	4.3	0.1	0.3	0.5		0.7	0.4	0.0
Delay (s)	15.0	22.0	17.0	18.1	30.4	16.4	26.4	30.5		20.8	26.8	17.5
Level of Service	B	C	B	B	C	B	C	C		C	C	B
Approach Delay (s)		19.2			24.5			30.0			23.4	
Approach LOS		B			C			C			C	

Intersection Summary			
HCM Average Control Delay	23.8	HCM Level of Service	C
HCM Volume to Capacity ratio	0.64		
Actuated Cycle Length (s)	78.5	Sum of lost time (s)	35.0
Intersection Capacity Utilization	60.2%	ICU Level of Service	B
Analysis Period (min)	15		
c Critical Lane Group			

HCM Unsignalized Intersection Capacity Analysis
600: Road A & North Star Blvd.

LCPS (HS 7)
2015 Future Background

Movement	EBL	EBR	NBL	NBT	SBT	SBR
Lane Configurations						
Sign Control	Stop			Stop	Stop	
Volume (vph)	4	5	3	31	16	2
Peak Hour Factor	0.92	0.92	0.92	0.92	0.92	0.92
Hourly flow rate (vph)	4	5	3	34	17	2

Direction, Lane #	EB 1	EB 2	NB 1	NB 2	SB 1	SB 2
Volume Total (vph)	4	5	3	34	17	2
Volume Left (vph)	4	0	3	0	0	0
Volume Right (vph)	0	5	0	0	0	2
Hadj (s)	2.20	1.00	1.06	0.03	0.03	0.15
Departure Headway (s)	6.8	5.6	5.6	4.6	4.6	4.7
Degree Utilization, x	0.01	0.01	0.01	0.04	0.02	0.00
Capacity (veh/h)	511	624	631	773	778	751
Control Delay (s)	8.7	7.5	7.4	6.6	6.5	6.5
Approach Delay (s)	8.0		6.7		6.5	
Approach LOS	A		A		A	

Intersection Summary			
Delay	6.8		
HCM Level of Service	A		
Intersection Capacity Utilization	13.3%	ICU Level of Service	A
Analysis Period (min)	15		

Movement	EBL	EBR	NBL	NBT	SBT	SBR
Lane Configurations						
Sign Control	Stop			Stop	Stop	
Volume (vph)	27	49	24	7	8	13
Peak Hour Factor	0.92	0.92	0.92	0.92	0.92	0.92
Hourly flow rate (vph)	29	53	26	8	9	14

Direction, Lane #	EB 1	EB 2	NB 1	NB 2	SB 1	SB 2
Volume Total (vph)	29	53	26	8	9	14
Volume Left (vph)	29	0	26	0	0	0
Volume Right (vph)	0	53	0	0	0	14
Hadj (s)	0.53	-0.67	0.53	0.24	0.10	-0.67
Departure Headway (s)	5.2	4.0	5.2	4.9	4.8	4.1
Degree Utilization, x	0.04	0.06	0.04	0.01	0.01	0.02
Capacity (veh/h)	686	884	668	707	731	860
Control Delay (s)	7.2	6.0	7.2	6.8	6.7	5.9
Approach Delay (s)	6.4		7.1		6.2	
Approach LOS	A		A		A	

Intersection Summary			
Delay	6.6		
HCM Level of Service	A		
Intersection Capacity Utilization	18.0%	ICU Level of Service	A
Analysis Period (min)	15		

Movement	EBL	EBT	WBT	WBR	SBL	SBR
Lane Configurations						
Volume (veh/h)	36	163	231	71	68	32
Sign Control		Free	Free		Stop	
Grade		0%	0%		0%	
Peak Hour Factor	0.92	0.92	0.92	0.92	0.92	0.92
Hourly flow rate (vph)	39	177	251	77	74	35
Pedestrians						
Lane Width (ft)						
Walking Speed (ft/s)						
Percent Blockage						
Right turn flare (veh)						12
Median type		None	None			
Median storage veh)						
Upstream signal (ft)						
pX, platoon unblocked						
vC, conflicting volume	328				507	251
vC1, stage 1 conf vol						
vC2, stage 2 conf vol						
vCu, unblocked vol	328				507	251
tC, single (s)	4.1				6.5	6.2
tC, 2 stage (s)						
tF (s)	2.2				3.6	3.3
p0 queue free %	97				85	96
cM capacity (veh/h)	1231				502	785

Direction, Lane #	EB 1	WB 1	WB 2	SB 1
Volume Total	216	251	77	109
Volume Left	39	0	0	74
Volume Right	0	0	77	35
cSH	1231	1700	1700	739
Volume to Capacity	0.03	0.15	0.05	0.15
Queue Length 95th (ft)	2	0	0	13
Control Delay (s)	1.7	0.0	0.0	12.2
Lane LOS	A			B
Approach Delay (s)	1.7	0.0		12.2
Approach LOS				B

Intersection Summary			
Average Delay	2.6		
Intersection Capacity Utilization	36.5%	ICU Level of Service	A
Analysis Period (min)	15		

HCM Signalized Intersection Capacity Analysis
100: Route 50 & Goshen Road

LCPS (HS 7)
2015 Future Background

Movement	EBL	EBT	EBR	WBL	WBT	WBR	NBL	NBT	NBR	SBL	SBT	SBR
Lane Configurations												
Volume (vph)	16	1277	23	51	388	14	35	16	47	6	1	0
Ideal Flow (vphpl)	1900	1900	1900	1900	1900	1900	1900	1900	1900	1900	1900	1900
Total Lost time (s)	7.0	7.0	7.0	7.0	7.0	7.0		7.0			7.0	
Lane Util. Factor	1.00	0.95	1.00	1.00	0.95	1.00		1.00			1.00	
Frt	1.00	1.00	0.85	1.00	1.00	0.85		0.94			1.00	
Flt Protected	0.95	1.00	1.00	0.95	1.00	1.00		0.98			0.96	
Satd. Flow (prot)	1770	3505	1524	1752	3343	1583		1687			1785	
Flt Permitted	0.95	1.00	1.00	0.95	1.00	1.00		0.88			0.79	
Satd. Flow (perm)	1770	3505	1524	1752	3343	1583		1508			1463	
Peak-hour factor, PHF	0.92	0.92	0.92	0.92	0.92	0.92	0.92	0.92	0.92	0.92	0.92	0.92
Adj. Flow (vph)	17	1388	25	55	422	15	38	17	51	7	1	0
RTOR Reduction (vph)	0	0	9	0	0	6	0	18	0	0	0	0
Lane Group Flow (vph)	17	1388	16	55	422	9	0	88	0	0	8	0
Heavy Vehicles (%)	2%	3%	6%	3%	8%	2%	6%	2%	2%	2%	2%	2%
Turn Type	Prot		Perm	Prot		Perm	Perm			Perm		
Protected Phases	5	2		1	6			8			4	
Permitted Phases			2			6	8			4		
Actuated Green, G (s)	2.4	46.0	46.0	6.6	50.2	50.2		11.0			11.0	
Effective Green, g (s)	2.4	46.0	46.0	6.6	50.2	50.2		11.0			11.0	
Actuated g/C Ratio	0.03	0.54	0.54	0.08	0.59	0.59		0.13			0.13	
Clearance Time (s)	7.0	7.0	7.0	7.0	7.0	7.0		7.0			7.0	
Vehicle Extension (s)	3.0	3.0	3.0	3.0	3.0	3.0		3.0			3.0	
Lane Grp Cap (vph)	50	1906	829	137	1984	939		196			190	
v/s Ratio Prot	0.01	c0.40		c0.03	c0.13							
v/s Ratio Perm			0.01			0.01		c0.06			0.01	
v/c Ratio	0.34	0.73	0.02	0.40	0.21	0.01		0.45			0.04	
Uniform Delay, d1	40.3	14.6	8.9	37.1	8.0	7.0		34.0			32.2	
Progression Factor	1.00	1.00	1.00	1.00	1.00	1.00		1.00			1.00	
Incremental Delay, d2	4.0	1.4	0.0	1.9	0.1	0.0		1.6			0.1	
Delay (s)	44.3	16.0	8.9	39.0	8.1	7.0		35.6			32.3	
Level of Service	D	B	A	D	A	A		D			C	
Approach Delay (s)		16.2			11.5			35.6			32.3	
Approach LOS		B			B			D			C	

Intersection Summary			
HCM Average Control Delay	16.1	HCM Level of Service	B
HCM Volume to Capacity ratio	0.73		
Actuated Cycle Length (s)	84.6	Sum of lost time (s)	28.0
Intersection Capacity Utilization	59.4%	ICU Level of Service	B
Analysis Period (min)	15		

c Critical Lane Group

HCM Unsignalized Intersection Capacity Analysis
200: Tall Cedars Pkwy & West Spine Road

LCPS (HS 7)
2015 Future Background

Movement	EBL	EBR	NBL	NBT	SBT	SBR
Lane Configurations						
Volume (veh/h)	59	94	87	823	312	51
Sign Control	Stop			Free	Free	
Grade	0%			0%	0%	
Peak Hour Factor	0.92	0.92	0.92	0.92	0.92	0.92
Hourly flow rate (vph)	64	102	95	895	339	55
Pedestrians						
Lane Width (ft)						
Walking Speed (ft/s)						
Percent Blockage						
Right turn flare (veh)						
Median type				None	None	
Median storage veh)						
Upstream signal (ft)						
pX, platoon unblocked						
vC, conflicting volume	976	170	339			
vC1, stage 1 conf vol						
vC2, stage 2 conf vol						
vCu, unblocked vol	976	170	339			
tC, single (s)	6.8	6.9	4.1			
tC, 2 stage (s)						
tF (s)	3.5	3.3	2.2			
p0 queue free %	72	88	92			
cM capacity (veh/h)	229	845	1217			

Direction, Lane #	EB 1	EB 2	NB 1	NB 2	SB 1	SB 2	SB 3
Volume Total	64	102	393	596	170	170	55
Volume Left	64	0	95	0	0	0	0
Volume Right	0	102	0	0	0	0	55
cSH	229	845	1217	1700	1700	1700	1700
Volume to Capacity	0.28	0.12	0.08	0.35	0.10	0.10	0.03
Queue Length 95th (ft)	28	10	6	0	0	0	0
Control Delay (s)	26.7	9.8	2.6	0.0	0.0	0.0	0.0
Lane LOS	D	A	A				
Approach Delay (s)	16.3		1.0		0.0		
Approach LOS	C						

Intersection Summary			
Average Delay	2.4		
Intersection Capacity Utilization	47.2%	ICU Level of Service	A
Analysis Period (min)	15		

Movement	EBL	EBT	EBR	WBL	WBT	WBR	NBL	NBT	NBR	SBL	SBT	SBR
Lane Configurations												
Volume (vph)	160	398	37	72	163	154	46	327	152	253	170	80
Ideal Flow (vphpl)	1900	1900	1900	1900	1900	1900	1900	1900	1900	1900	1900	1900
Total Lost time (s)	7.0	7.0	7.0	7.0	7.0	7.0	7.0	7.0		7.0	7.0	7.0
Lane Util. Factor	1.00	1.00	1.00	1.00	1.00	1.00	1.00	0.95		1.00	0.95	1.00
Frt	1.00	1.00	0.85	1.00	1.00	0.85	1.00	0.95		1.00	1.00	0.85
Flt Protected	0.95	1.00	1.00	0.95	1.00	1.00	0.95	1.00		0.95	1.00	1.00
Satd. Flow (prot)	1770	1863	1583	1770	1863	1583	1770	3371		1770	3539	1583
Flt Permitted	0.59	1.00	1.00	0.29	1.00	1.00	0.64	1.00		0.23	1.00	1.00
Satd. Flow (perm)	1096	1863	1583	535	1863	1583	1183	3371		421	3539	1583
Peak-hour factor, PHF	0.92	0.92	0.92	0.92	0.92	0.92	0.92	0.92	0.92	0.92	0.92	0.92
Adj. Flow (vph)	174	433	40	78	177	167	50	355	165	275	185	87
RTOR Reduction (vph)	0	0	27	0	0	81	0	48	0	0	0	53
Lane Group Flow (vph)	174	433	13	78	177	86	50	472	0	275	185	34
Turn Type	pm+pt		pm+ov	pm+pt		pm+ov	pm+pt			pm+pt		pm+ov
Protected Phases	7	4	5	3	8	1	5	2		1	6	7
Permitted Phases	4		4	8		8	2			6		6
Actuated Green, G (s)	32.9	27.7	30.7	28.5	25.5	40.0	21.8	18.8		40.3	30.3	35.5
Effective Green, g (s)	32.9	27.7	30.7	28.5	25.5	40.0	21.8	18.8		40.3	30.3	35.5
Actuated g/C Ratio	0.36	0.30	0.33	0.31	0.28	0.43	0.24	0.20		0.44	0.33	0.39
Clearance Time (s)	7.0	7.0	7.0	7.0	7.0	7.0	7.0	7.0		7.0	7.0	7.0
Vehicle Extension (s)	3.0	3.0	3.0	3.0	3.0	3.0	3.0	3.0		3.0	3.0	3.0
Lane Grp Cap (vph)	430	561	649	206	516	809	299	689		397	1166	731
v/s Ratio Prot	c0.02	c0.23	0.00	0.01	0.10	0.02	0.01	0.14		c0.11	0.05	0.00
v/s Ratio Perm	0.12		0.01	0.10		0.04	0.03			c0.19		0.02
v/c Ratio	0.40	0.77	0.02	0.38	0.34	0.11	0.17	0.69		0.69	0.16	0.05
Uniform Delay, d1	21.5	29.3	20.6	23.7	26.6	15.4	27.6	33.9		18.6	21.8	17.7
Progression Factor	1.00	1.00	1.00	1.00	1.00	1.00	1.00	1.00		1.00	1.00	1.00
Incremental Delay, d2	0.6	6.5	0.0	1.2	0.4	0.1	0.3	2.8		5.2	0.1	0.0
Delay (s)	22.1	35.8	20.6	24.8	27.0	15.5	27.8	36.7		23.7	21.9	17.7
Level of Service	C	D	C	C	C	B	C	D		C	C	B
Approach Delay (s)		31.2			22.0			35.9			22.2	
Approach LOS		C			C			D			C	

Intersection Summary			
HCM Average Control Delay	28.4	HCM Level of Service	C
HCM Volume to Capacity ratio	0.63		
Actuated Cycle Length (s)	92.0	Sum of lost time (s)	14.0
Intersection Capacity Utilization	76.2%	ICU Level of Service	D
Analysis Period (min)	15		
c Critical Lane Group			

Movement	EBL	EBR	NBL	NBT	SBT	SBR
Lane Configurations						
Sign Control	Stop			Stop	Stop	
Volume (vph)	2	3	7	22	39	5
Peak Hour Factor	0.92	0.92	0.92	0.92	0.92	0.92
Hourly flow rate (vph)	2	3	8	24	42	5

Direction, Lane #	EB 1	EB 2	NB 1	NB 2	SB 1	SB 2
Volume Total (vph)	2	3	8	24	42	5
Volume Left (vph)	2	0	8	0	0	0
Volume Right (vph)	0	3	0	0	0	5
Hadj (s)	1.77	-0.14	1.71	0.03	0.03	0.66
Departure Headway (s)	6.5	4.5	6.3	4.6	4.6	5.2
Degree Utilization, x	0.00	0.00	0.01	0.03	0.05	0.01
Capacity (veh/h)	538	768	566	773	783	681
Control Delay (s)	8.3	6.4	8.1	6.5	6.6	7.0
Approach Delay (s)	7.1		6.9		6.7	
Approach LOS	A		A		A	

Intersection Summary			
Delay	6.8		
HCM Level of Service	A		
Intersection Capacity Utilization	15.8%	ICU Level of Service	A
Analysis Period (min)	15		

Movement	EBL	EBR	NBL	NBT	SBT	SBR
Lane Configurations						
Sign Control	Stop			Stop	Stop	
Volume (vph)	16	28	60	13	9	33
Peak Hour Factor	0.92	0.92	0.92	0.92	0.92	0.92
Hourly flow rate (vph)	17	30	65	14	10	36

Direction, Lane #	EB 1	EB 2	NB 1	NB 2	SB 1	SB 2
Volume Total (vph)	17	30	65	14	10	36
Volume Left (vph)	17	0	65	0	0	0
Volume Right (vph)	0	30	0	0	0	36
Hadj (s)	0.53	-0.67	0.53	0.65	0.19	-0.67
Departure Headway (s)	5.3	4.1	5.2	5.3	4.9	4.0
Degree Utilization, x	0.03	0.03	0.09	0.02	0.01	0.04
Capacity (veh/h)	658	838	680	665	729	874
Control Delay (s)	7.3	6.1	7.5	7.2	6.7	6.0
Approach Delay (s)	6.5		7.5		6.1	
Approach LOS	A		A		A	

Intersection Summary			
Delay	6.8		
HCM Level of Service	A		
Intersection Capacity Utilization	20.0%	ICU Level of Service	A
Analysis Period (min)	15		

Movement	EBL	EBT	WBT	WBR	SBL	SBR
Lane Configurations						
Volume (veh/h)	49	219	92	70	83	41
Sign Control		Free	Free		Stop	
Grade		0%	0%		0%	
Peak Hour Factor	0.92	0.92	0.92	0.92	0.92	0.92
Hourly flow rate (vph)	53	238	100	76	90	45
Pedestrians						
Lane Width (ft)						
Walking Speed (ft/s)						
Percent Blockage						
Right turn flare (veh)						12
Median type		None	None			
Median storage veh)						
Upstream signal (ft)						
pX, platoon unblocked						
vC, conflicting volume	176				445	100
vC1, stage 1 conf vol						
vC2, stage 2 conf vol						
vCu, unblocked vol	176				445	100
tC, single (s)	4.1				6.4	6.2
tC, 2 stage (s)						
tF (s)	2.2				3.5	3.3
p0 queue free %	96				84	95
cM capacity (veh/h)	1400				549	956

Direction, Lane #	EB 1	WB 1	WB 2	SB 1
Volume Total	291	100	76	135
Volume Left	53	0	0	90
Volume Right	0	0	76	45
cSH	1400	1700	1700	821
Volume to Capacity	0.04	0.06	0.04	0.16
Queue Length 95th (ft)	3	0	0	15
Control Delay (s)	1.7	0.0	0.0	11.6
Lane LOS	A			B
Approach Delay (s)	1.7	0.0		11.6
Approach LOS				B

Intersection Summary			
Average Delay	3.4		
Intersection Capacity Utilization	32.2%	ICU Level of Service	A
Analysis Period (min)	15		

HCM Signalized Intersection Capacity Analysis
100: Route 50 & Goshen Road

LCPS (HS 7)
2015 Future Background

Movement	EBL	EBT	EBR	WBL	WBT	WBR	NBL	NBT	NBR	SBL	SBT	SBR
Lane Configurations												
Volume (vph)	5	435	32	40	850	2	23	1	43	1	3	2
Ideal Flow (vphpl)	1900	1900	1900	1900	1900	1900	1900	1900	1900	1900	1900	1900
Total Lost time (s)	7.0	7.0	7.0	7.0	7.0	7.0		7.0			7.0	
Lane Util. Factor	1.00	0.95	1.00	1.00	0.95	1.00		1.00			1.00	
Frt	1.00	1.00	0.85	1.00	1.00	0.85		0.91			0.95	
Flt Protected	0.95	1.00	1.00	0.95	1.00	1.00		0.98			0.99	
Satd. Flow (prot)	1770	3505	1583	1752	3343	1583		1651			1764	
Flt Permitted	0.95	1.00	1.00	0.95	1.00	1.00		0.88			0.92	
Satd. Flow (perm)	1770	3505	1583	1752	3343	1583		1484			1645	
Peak-hour factor, PHF	0.92	0.92	0.92	0.92	0.92	0.92	0.92	0.92	0.92	0.92	0.92	0.92
Adj. Flow (vph)	5	473	35	43	924	2	25	1	47	1	3	2
RTOR Reduction (vph)	0	0	22	0	0	1	0	35	0	0	2	0
Lane Group Flow (vph)	5	473	13	43	924	1	0	38	0	0	4	0
Heavy Vehicles (%)	2%	3%	2%	3%	8%	2%	2%	2%	4%	2%	2%	2%
Turn Type	Prot		Perm	Prot		Perm	Perm			Perm		
Protected Phases	5	2		1	6			8			4	
Permitted Phases			2			6	8			4		
Actuated Green, G (s)	0.8	18.8	18.8	2.5	20.5	20.5		7.1			7.1	
Effective Green, g (s)	0.8	18.8	18.8	2.5	20.5	20.5		7.1			7.1	
Actuated g/C Ratio	0.02	0.38	0.38	0.05	0.41	0.41		0.14			0.14	
Clearance Time (s)	7.0	7.0	7.0	7.0	7.0	7.0		7.0			7.0	
Vehicle Extension (s)	3.0	3.0	3.0	3.0	3.0	3.0		3.0			3.0	
Lane Grp Cap (vph)	29	1334	602	89	1387	657		213			236	
v/s Ratio Prot	0.00	0.13		c0.02	c0.28							
v/s Ratio Perm			0.01			0.00		c0.03			0.00	
v/c Ratio	0.17	0.35	0.02	0.48	0.67	0.00		0.18			0.02	
Uniform Delay, d1	24.0	11.0	9.6	22.8	11.7	8.5		18.6			18.2	
Progression Factor	1.00	1.00	1.00	1.00	1.00	1.00		1.00			1.00	
Incremental Delay, d2	2.8	0.2	0.0	4.1	1.2	0.0		0.4			0.0	
Delay (s)	26.8	11.1	9.6	26.9	12.9	8.5		19.0			18.2	
Level of Service	C	B	A	C	B	A		B			B	
Approach Delay (s)		11.2			13.5			19.0			18.2	
Approach LOS		B			B			B			B	

Intersection Summary				
HCM Average Control Delay	13.0	HCM Level of Service	B	
HCM Volume to Capacity ratio	0.46			
Actuated Cycle Length (s)	49.4	Sum of lost time (s)	14.0	
Intersection Capacity Utilization	51.7%	ICU Level of Service	A	
Analysis Period (min)	15			

c Critical Lane Group

HCM Unsignalized Intersection Capacity Analysis
200: Tall Cedars Pkwy & West Spine Road

LCPS (HS 7)
2015 Future Background

Movement	EBL	EBR	NBL	NBT	SBT	SBR
Lane Configurations						
Volume (veh/h)	35	84	64	428	670	57
Sign Control	Stop			Free	Free	
Grade	0%			0%	0%	
Peak Hour Factor	0.92	0.92	0.92	0.92	0.92	0.92
Hourly flow rate (vph)	38	91	70	465	728	62
Pedestrians						
Lane Width (ft)						
Walking Speed (ft/s)						
Percent Blockage						
Right turn flare (veh)						
Median type				None	None	
Median storage veh)						
Upstream signal (ft)						
pX, platoon unblocked						
vC, conflicting volume	1100	364	728			
vC1, stage 1 conf vol						
vC2, stage 2 conf vol						
vCu, unblocked vol	1100	364	728			
tC, single (s)	6.9	6.9	4.1			
tC, 2 stage (s)						
tF (s)	3.5	3.3	2.2			
p0 queue free %	80	86	92			
cM capacity (veh/h)	189	633	871			

Direction, Lane #	EB 1	EB 2	NB 1	NB 2	SB 1	SB 2	SB 3
Volume Total	38	91	225	310	364	364	62
Volume Left	38	0	70	0	0	0	0
Volume Right	0	91	0	0	0	0	62
cSH	189	633	871	1700	1700	1700	1700
Volume to Capacity	0.20	0.14	0.08	0.18	0.21	0.21	0.04
Queue Length 95th (ft)	18	13	6	0	0	0	0
Control Delay (s)	28.9	11.6	3.5	0.0	0.0	0.0	0.0
Lane LOS	D	B	A				
Approach Delay (s)	16.7		1.5		0.0		
Approach LOS	C						

Intersection Summary			
Average Delay	2.0		
Intersection Capacity Utilization	45.5%	ICU Level of Service	A
Analysis Period (min)	15		

Movement	EBL	EBT	EBR	WBL	WBT	WBR	NBL	NBT	NBR	SBL	SBT	SBR
Lane Configurations												
Volume (vph)	119	209	45	90	316	158	36	179	51	128	290	111
Ideal Flow (vphpl)	1900	1900	1900	1900	1900	1900	1900	1900	1900	1900	1900	1900
Total Lost time (s)	7.0	7.0	7.0	7.0	7.0	7.0	7.0	7.0		7.0	7.0	7.0
Lane Util. Factor	1.00	1.00	1.00	1.00	1.00	1.00	1.00	0.95		1.00	0.95	1.00
Frt	1.00	1.00	0.85	1.00	1.00	0.85	1.00	0.97		1.00	1.00	0.85
Flt Protected	0.95	1.00	1.00	0.95	1.00	1.00	0.95	1.00		0.95	1.00	1.00
Satd. Flow (prot)	1770	1863	1583	1770	1863	1583	1770	3422		1770	3539	1583
Flt Permitted	0.33	1.00	1.00	0.62	1.00	1.00	0.56	1.00		0.43	1.00	1.00
Satd. Flow (perm)	607	1863	1583	1149	1863	1583	1044	3422		798	3539	1583
Peak-hour factor, PHF	0.92	0.92	0.92	0.92	0.92	0.92	0.92	0.92	0.92	0.92	0.92	0.92
Adj. Flow (vph)	129	227	49	98	343	172	39	195	55	139	315	121
RTOR Reduction (vph)	0	0	32	0	0	109	0	24	0	0	0	80
Lane Group Flow (vph)	129	227	17	98	343	63	39	226	0	139	315	41
Turn Type	pm+pt		pm+ov	pm+pt		pm+ov	pm+pt			pm+pt		pm+ov
Protected Phases	7	4	5	3	8	1	5	2		1	6	7
Permitted Phases	4		4	8		8	2			6		6
Actuated Green, G (s)	33.7	24.0	27.1	27.1	20.7	28.6	15.3	12.2		24.9	17.0	26.7
Effective Green, g (s)	33.7	24.0	27.1	27.1	20.7	28.6	15.3	12.2		24.9	17.0	26.7
Actuated g/C Ratio	0.43	0.31	0.35	0.35	0.26	0.36	0.19	0.16		0.32	0.22	0.34
Clearance Time (s)	7.0	7.0	7.0	7.0	7.0	7.0	7.0	7.0		7.0	7.0	7.0
Vehicle Extension (s)	3.0	3.0	3.0	3.0	3.0	3.0	3.0	3.0		3.0	3.0	3.0
Lane Grp Cap (vph)	404	570	688	447	491	718	232	532		351	766	680
v/s Ratio Prot	c0.04	c0.12	0.00	0.02	c0.18	0.01	0.01	0.07		c0.04	c0.09	0.01
v/s Ratio Perm	0.10		0.01	0.06		0.03	0.03			0.09		0.02
v/c Ratio	0.32	0.40	0.02	0.22	0.70	0.09	0.17	0.42		0.40	0.41	0.06
Uniform Delay, d1	14.5	21.5	17.0	17.8	26.1	16.4	26.0	30.0		20.0	26.4	17.4
Progression Factor	1.00	1.00	1.00	1.00	1.00	1.00	1.00	1.00		1.00	1.00	1.00
Incremental Delay, d2	0.5	0.5	0.0	0.2	4.3	0.1	0.3	0.5		0.7	0.4	0.0
Delay (s)	15.0	22.0	17.0	18.1	30.4	16.4	26.4	30.5		20.8	26.8	17.5
Level of Service	B	C	B	B	C	B	C	C		C	C	B
Approach Delay (s)		19.2			24.5			30.0			23.4	
Approach LOS		B			C			C			C	

Intersection Summary			
HCM Average Control Delay	23.8	HCM Level of Service	C
HCM Volume to Capacity ratio	0.64		
Actuated Cycle Length (s)	78.5	Sum of lost time (s)	35.0
Intersection Capacity Utilization	60.2%	ICU Level of Service	B
Analysis Period (min)	15		
c Critical Lane Group			

Movement	EBL	EBR	NBL	NBT	SBT	SBR
Lane Configurations						
Sign Control	Stop			Stop	Stop	
Volume (vph)	4	5	3	31	16	2
Peak Hour Factor	0.92	0.92	0.92	0.92	0.92	0.92
Hourly flow rate (vph)	4	5	3	34	17	2

Direction, Lane #	EB 1	EB 2	NB 1	NB 2	SB 1	SB 2
Volume Total (vph)	4	5	3	34	17	2
Volume Left (vph)	4	0	3	0	0	0
Volume Right (vph)	0	5	0	0	0	2
Hadj (s)	2.20	1.00	1.06	0.03	0.03	0.15
Departure Headway (s)	6.8	5.6	5.6	4.6	4.6	4.7
Degree Utilization, x	0.01	0.01	0.01	0.04	0.02	0.00
Capacity (veh/h)	511	624	631	773	778	751
Control Delay (s)	8.7	7.5	7.4	6.6	6.5	6.5
Approach Delay (s)	8.0		6.7		6.5	
Approach LOS	A		A		A	

Intersection Summary			
Delay	6.8		
HCM Level of Service	A		
Intersection Capacity Utilization	13.3%	ICU Level of Service	A
Analysis Period (min)	15		

Movement	EBL	EBR	NBL	NBT	SBT	SBR
Lane Configurations						
Sign Control	Stop			Stop	Stop	
Volume (vph)	27	49	24	7	8	13
Peak Hour Factor	0.92	0.92	0.92	0.92	0.92	0.92
Hourly flow rate (vph)	29	53	26	8	9	14

Direction, Lane #	EB 1	EB 2	NB 1	NB 2	SB 1	SB 2
Volume Total (vph)	29	53	26	8	9	14
Volume Left (vph)	29	0	26	0	0	0
Volume Right (vph)	0	53	0	0	0	14
Hadj (s)	0.53	-0.67	0.53	0.24	0.10	-0.67
Departure Headway (s)	5.2	4.0	5.2	4.9	4.8	4.1
Degree Utilization, x	0.04	0.06	0.04	0.01	0.01	0.02
Capacity (veh/h)	686	884	668	707	731	860
Control Delay (s)	7.2	6.0	7.2	6.8	6.7	5.9
Approach Delay (s)	6.4		7.1		6.2	
Approach LOS	A		A		A	

Intersection Summary			
Delay	6.6		
HCM Level of Service	A		
Intersection Capacity Utilization	18.0%	ICU Level of Service	A
Analysis Period (min)	15		

Movement	EBL	EBT	WBT	WBR	SBL	SBR
Lane Configurations						
Volume (veh/h)	36	163	231	71	68	32
Sign Control		Free	Free		Stop	
Grade		0%	0%		0%	
Peak Hour Factor	0.92	0.92	0.92	0.92	0.92	0.92
Hourly flow rate (vph)	39	177	251	77	74	35
Pedestrians						
Lane Width (ft)						
Walking Speed (ft/s)						
Percent Blockage						
Right turn flare (veh)						12
Median type		None	None			
Median storage veh)						
Upstream signal (ft)						
pX, platoon unblocked						
vC, conflicting volume	328				507	251
vC1, stage 1 conf vol						
vC2, stage 2 conf vol						
vCu, unblocked vol	328				507	251
tC, single (s)	4.1				6.5	6.2
tC, 2 stage (s)						
tF (s)	2.2				3.6	3.3
p0 queue free %	97				85	96
cM capacity (veh/h)	1231				502	785

Direction, Lane #	EB 1	WB 1	WB 2	SB 1
Volume Total	216	251	77	109
Volume Left	39	0	0	74
Volume Right	0	0	77	35
cSH	1231	1700	1700	739
Volume to Capacity	0.03	0.15	0.05	0.15
Queue Length 95th (ft)	2	0	0	13
Control Delay (s)	1.7	0.0	0.0	12.2
Lane LOS	A			B
Approach Delay (s)	1.7	0.0		12.2
Approach LOS				B

Intersection Summary			
Average Delay	2.6		
Intersection Capacity Utilization	36.5%	ICU Level of Service	A
Analysis Period (min)	15		

APPENDIX K-4

INTERSECTION CAPACITY ANALYSIS RESULTS– FUTURE CONDITIONS WITHOUT PROPOSED DEVELOPMENT (2015) – ES PEAK, ALTERNATIVE 2

HCM Signalized Intersection Capacity Analysis
100: Route 50 & Goshen Road

LCPS (HS 7)
2015 Future Background

Movement	EBL	EBT	EBR	WBL	WBT	WBR	NBL	NBT	NBR	SBL	SBT	SBR
Lane Configurations												
Volume (vph)	16	1277	22	44	388	14	35	16	43	6	1	0
Ideal Flow (vphpl)	1900	1900	1900	1900	1900	1900	1900	1900	1900	1900	1900	1900
Total Lost time (s)	7.0	7.0	7.0	7.0	7.0	7.0		7.0			7.0	
Lane Util. Factor	1.00	0.95	1.00	1.00	0.95	1.00		1.00			1.00	
Frt	1.00	1.00	0.85	1.00	1.00	0.85		0.94			1.00	
Flt Protected	0.95	1.00	1.00	0.95	1.00	1.00		0.98			0.96	
Satd. Flow (prot)	1770	3505	1524	1770	3343	1583		1683			1785	
Flt Permitted	0.95	1.00	1.00	0.95	1.00	1.00		0.87			0.72	
Satd. Flow (perm)	1770	3505	1524	1770	3343	1583		1498			1340	
Peak-hour factor, PHF	0.92	0.92	0.92	0.92	0.92	0.92	0.92	0.92	0.92	0.92	0.92	0.92
Adj. Flow (vph)	17	1388	24	48	422	15	38	17	47	7	1	0
RTOR Reduction (vph)	0	0	8	0	0	6	0	17	0	0	0	0
Lane Group Flow (vph)	17	1388	16	48	422	9	0	85	0	0	8	0
Heavy Vehicles (%)	2%	3%	6%	2%	8%	2%	6%	2%	3%	2%	2%	2%
Turn Type	Prot		Perm	Prot		Perm	Perm			Perm		
Protected Phases	5	2		1	6			8			4	
Permitted Phases			2			6	8			4		
Actuated Green, G (s)	2.4	45.7	45.7	6.2	49.5	49.5		10.9			10.9	
Effective Green, g (s)	2.4	45.7	45.7	6.2	49.5	49.5		10.9			10.9	
Actuated g/C Ratio	0.03	0.55	0.55	0.07	0.59	0.59		0.13			0.13	
Clearance Time (s)	7.0	7.0	7.0	7.0	7.0	7.0		7.0			7.0	
Vehicle Extension (s)	3.0	3.0	3.0	3.0	3.0	3.0		3.0			3.0	
Lane Grp Cap (vph)	51	1911	831	131	1975	935		195			174	
v/s Ratio Prot	0.01	c0.40		c0.03	c0.13							
v/s Ratio Perm			0.01			0.01		c0.06			0.01	
v/c Ratio	0.33	0.73	0.02	0.37	0.21	0.01		0.44			0.05	
Uniform Delay, d1	39.9	14.3	8.8	36.9	8.0	7.1		33.6			31.9	
Progression Factor	1.00	1.00	1.00	1.00	1.00	1.00		1.00			1.00	
Incremental Delay, d2	3.8	1.4	0.0	1.7	0.1	0.0		1.6			0.1	
Delay (s)	43.7	15.7	8.8	38.7	8.1	7.1		35.2			32.0	
Level of Service	D	B	A	D	A	A		D			C	
Approach Delay (s)		16.0			11.1			35.2			32.0	
Approach LOS		B			B			D			C	

Intersection Summary			
HCM Average Control Delay	15.8	HCM Level of Service	B
HCM Volume to Capacity ratio	0.73		
Actuated Cycle Length (s)	83.8	Sum of lost time (s)	28.0
Intersection Capacity Utilization	53.3%	ICU Level of Service	A
Analysis Period (min)	15		

c Critical Lane Group

HCM Unsignalized Intersection Capacity Analysis
200: Tall Cedars Pkwy & West Spine Road

LCPS (HS 7)
2015 Future Background

Movement	EBL	EBR	NBL	NBT	SBT	SBR
Lane Configurations						
Volume (veh/h)	58	94	87	823	312	49
Sign Control	Stop			Free	Free	
Grade	0%			0%	0%	
Peak Hour Factor	0.92	0.92	0.92	0.92	0.92	0.92
Hourly flow rate (vph)	63	102	95	895	339	53
Pedestrians						
Lane Width (ft)						
Walking Speed (ft/s)						
Percent Blockage						
Right turn flare (veh)						
Median type				None	None	
Median storage veh)						
Upstream signal (ft)						
pX, platoon unblocked						
vC, conflicting volume	976	170	339			
vC1, stage 1 conf vol						
vC2, stage 2 conf vol						
vCu, unblocked vol	976	170	339			
tC, single (s)	6.8	6.9	4.1			
tC, 2 stage (s)						
tF (s)	3.5	3.3	2.2			
p0 queue free %	73	88	92			
cM capacity (veh/h)	229	845	1217			

Direction, Lane #	EB 1	EB 2	NB 1	NB 2	SB 1	SB 2	SB 3
Volume Total	63	102	393	596	170	170	53
Volume Left	63	0	95	0	0	0	0
Volume Right	0	102	0	0	0	0	53
cSH	229	845	1217	1700	1700	1700	1700
Volume to Capacity	0.27	0.12	0.08	0.35	0.10	0.10	0.03
Queue Length 95th (ft)	27	10	6	0	0	0	0
Control Delay (s)	26.5	9.8	2.6	0.0	0.0	0.0	0.0
Lane LOS	D	A	A				
Approach Delay (s)	16.2		1.0		0.0		
Approach LOS	C						

Intersection Summary			
Average Delay	2.4		
Intersection Capacity Utilization	47.2%	ICU Level of Service	A
Analysis Period (min)	15		

Movement	EBL	EBT	EBR	WBL	WBT	WBR	NBL	NBT	NBR	SBL	SBT	SBR
Lane Configurations												
Volume (vph)	160	417	36	72	204	154	45	327	152	253	170	79
Ideal Flow (vphpl)	1900	1900	1900	1900	1900	1900	1900	1900	1900	1900	1900	1900
Total Lost time (s)	7.0	7.0	7.0	7.0	7.0	7.0	7.0	7.0		7.0	7.0	7.0
Lane Util. Factor	1.00	1.00	1.00	1.00	1.00	1.00	1.00	0.95		1.00	0.95	1.00
Frt	1.00	1.00	0.85	1.00	1.00	0.85	1.00	0.95		1.00	1.00	0.85
Flt Protected	0.95	1.00	1.00	0.95	1.00	1.00	0.95	1.00		0.95	1.00	1.00
Satd. Flow (prot)	1770	1863	1583	1770	1863	1583	1770	3371		1770	3539	1583
Flt Permitted	0.52	1.00	1.00	0.27	1.00	1.00	0.64	1.00		0.22	1.00	1.00
Satd. Flow (perm)	973	1863	1583	502	1863	1583	1183	3371		413	3539	1583
Peak-hour factor, PHF	0.92	0.92	0.92	0.92	0.92	0.92	0.92	0.92	0.92	0.92	0.92	0.92
Adj. Flow (vph)	174	453	39	78	222	167	49	355	165	275	185	86
RTOR Reduction (vph)	0	0	26	0	0	76	0	48	0	0	0	53
Lane Group Flow (vph)	174	453	13	78	222	91	49	472	0	275	185	33
Turn Type	pm+pt		pm+ov	pm+pt		pm+ov	pm+pt			pm+pt		pm+ov
Protected Phases	7	4	5	3	8	1	5	2		1	6	7
Permitted Phases	4		4	8		8	2			6		6
Actuated Green, G (s)	34.4	29.2	32.2	30.0	27.0	41.6	21.9	18.9		40.5	30.5	35.7
Effective Green, g (s)	34.4	29.2	32.2	30.0	27.0	41.6	21.9	18.9		40.5	30.5	35.7
Actuated g/C Ratio	0.37	0.31	0.34	0.32	0.29	0.44	0.23	0.20		0.43	0.33	0.38
Clearance Time (s)	7.0	7.0	7.0	7.0	7.0	7.0	7.0	7.0		7.0	7.0	7.0
Vehicle Extension (s)	3.0	3.0	3.0	3.0	3.0	3.0	3.0	3.0		3.0	3.0	3.0
Lane Grp Cap (vph)	401	581	662	201	537	821	295	680		390	1152	721
v/s Ratio Prot	c0.02	c0.24	0.00	0.01	0.12	0.02	0.01	0.14		c0.11	0.05	0.00
v/s Ratio Perm	0.14		0.01	0.11		0.04	0.03			c0.20		0.02
v/c Ratio	0.43	0.78	0.02	0.39	0.41	0.11	0.17	0.69		0.71	0.16	0.05
Uniform Delay, d1	21.7	29.3	20.3	23.6	27.0	15.2	28.3	34.7		19.3	22.5	18.3
Progression Factor	1.00	1.00	1.00	1.00	1.00	1.00	1.00	1.00		1.00	1.00	1.00
Incremental Delay, d2	0.8	6.6	0.0	1.2	0.5	0.1	0.3	3.1		5.7	0.1	0.0
Delay (s)	22.4	35.9	20.3	24.8	27.5	15.3	28.6	37.8		25.0	22.6	18.3
Level of Service	C	D	C	C	C	B	C	D		C	C	B
Approach Delay (s)		31.5			22.7			37.0			23.1	
Approach LOS		C			C			D			C	

Intersection Summary			
HCM Average Control Delay	29.0	HCM Level of Service	C
HCM Volume to Capacity ratio	0.64		
Actuated Cycle Length (s)	93.7	Sum of lost time (s)	14.0
Intersection Capacity Utilization	77.2%	ICU Level of Service	D
Analysis Period (min)	15		
c Critical Lane Group			

Movement	EBL	EBR	NBL	NBT	SBT	SBR
Lane Configurations						
Sign Control	Stop			Stop	Stop	
Volume (vph)	1	5	10	12	18	2
Peak Hour Factor	0.92	0.92	0.92	0.92	0.92	0.92
Hourly flow rate (vph)	1	5	11	13	20	2

Direction, Lane #	EB 1	EB 2	NB 1	NB 2	SB 1	SB 2
Volume Total (vph)	1	5	11	13	20	2
Volume Left (vph)	1	0	11	0	0	0
Volume Right (vph)	0	5	0	0	0	2
Hadj (s)	2.20	-0.02	1.69	0.03	0.03	1.00
Departure Headway (s)	6.8	4.6	6.2	4.6	4.6	5.5
Degree Utilization, x	0.00	0.01	0.02	0.02	0.02	0.00
Capacity (veh/h)	513	765	569	775	783	639
Control Delay (s)	8.6	6.4	8.1	6.4	6.5	7.4
Approach Delay (s)	6.8		7.2		6.6	
Approach LOS	A		A		A	

Intersection Summary			
Delay	6.9		
HCM Level of Service	A		
Intersection Capacity Utilization	17.2%	ICU Level of Service	A
Analysis Period (min)	15		

Movement	EBL	EBR	NBL	NBT	SBT	SBR
Lane Configurations						
Sign Control	Stop			Stop	Stop	
Volume (vph)	6	42	89	16	11	12
Peak Hour Factor	0.92	0.92	0.92	0.92	0.92	0.92
Hourly flow rate (vph)	7	46	97	17	12	13

Direction, Lane #	EB 1	EB 2	NB 1	NB 2	SB 1
Volume Total (vph)	7	46	97	17	25
Volume Left (vph)	7	0	97	0	0
Volume Right (vph)	0	46	0	0	13
Hadj (s)	0.53	-0.67	0.53	0.75	-0.15
Departure Headway (s)	5.4	4.2	5.2	5.4	4.4
Degree Utilization, x	0.01	0.05	0.14	0.03	0.03
Capacity (veh/h)	649	824	682	653	802
Control Delay (s)	7.2	6.2	7.8	7.3	7.5
Approach Delay (s)	6.4		7.7		7.5
Approach LOS	A		A		A

Intersection Summary			
Delay	7.3		
HCM Level of Service	A		
Intersection Capacity Utilization	21.6%	ICU Level of Service	A
Analysis Period (min)	15		

Movement	EBL	EBT	WBT	WBR	SBL	SBR
Lane Configurations						
Volume (veh/h)	46	219	92	106	100	39
Sign Control		Free	Free		Stop	
Grade		0%	0%		0%	
Peak Hour Factor	0.92	0.92	0.92	0.92	0.92	0.92
Hourly flow rate (vph)	50	238	100	115	109	42
Pedestrians						
Lane Width (ft)						
Walking Speed (ft/s)						
Percent Blockage						
Right turn flare (veh)						12
Median type		None	None			
Median storage veh)						
Upstream signal (ft)						
pX, platoon unblocked						
vC, conflicting volume	215				438	100
vC1, stage 1 conf vol						
vC2, stage 2 conf vol						
vCu, unblocked vol	215				438	100
tC, single (s)	4.1				6.4	6.2
tC, 2 stage (s)						
tF (s)	2.2				3.5	3.3
p0 queue free %	96				80	96
cM capacity (veh/h)	1355				555	956

Direction, Lane #	EB 1	WB 1	WB 2	SB 1
Volume Total	288	100	115	151
Volume Left	50	0	0	109
Volume Right	0	0	115	42
cSH	1355	1700	1700	771
Volume to Capacity	0.04	0.06	0.07	0.20
Queue Length 95th (ft)	3	0	0	18
Control Delay (s)	1.6	0.0	0.0	11.9
Lane LOS	A			B
Approach Delay (s)	1.6	0.0		11.9
Approach LOS				B

Intersection Summary			
Average Delay	3.5		
Intersection Capacity Utilization	32.9%	ICU Level of Service	A
Analysis Period (min)	15		

HCM Signalized Intersection Capacity Analysis
100: Route 50 & Goshen Road

LCPS (HS 7)
2015 Future Background

Movement	EBL	EBT	EBR	WBL	WBT	WBR	NBL	NBT	NBR	SBL	SBT	SBR
Lane Configurations												
Volume (vph)	5	435	31	37	850	2	22	1	37	1	3	2
Ideal Flow (vphpl)	1900	1900	1900	1900	1900	1900	1900	1900	1900	1900	1900	1900
Total Lost time (s)	7.0	7.0	7.0	7.0	7.0	7.0		7.0			7.0	
Lane Util. Factor	1.00	0.95	1.00	1.00	0.95	1.00		1.00			1.00	
Frt	1.00	1.00	0.85	1.00	1.00	0.85		0.92			0.95	
Flt Protected	0.95	1.00	1.00	0.95	1.00	1.00		0.98			0.99	
Satd. Flow (prot)	1770	3505	1583	1770	3343	1583		1613			1764	
Flt Permitted	0.95	1.00	1.00	0.95	1.00	1.00		0.88			0.93	
Satd. Flow (perm)	1770	3505	1583	1770	3343	1583		1439			1649	
Peak-hour factor, PHF	0.92	0.92	0.92	0.92	0.92	0.92	0.92	0.92	0.92	0.92	0.92	0.92
Adj. Flow (vph)	5	473	34	40	924	2	24	1	40	1	3	2
RTOR Reduction (vph)	0	0	21	0	0	1	0	31	0	0	2	0
Lane Group Flow (vph)	5	473	13	40	924	1	0	34	0	0	4	0
Heavy Vehicles (%)	2%	3%	2%	2%	8%	2%	8%	2%	5%	2%	2%	2%
Turn Type	Prot		Perm	Prot		Perm	Perm			Perm		
Protected Phases	5	2		1	6			8			4	
Permitted Phases			2			6	8			4		
Actuated Green, G (s)	0.8	18.8	18.8	2.4	20.4	20.4		7.0			7.0	
Effective Green, g (s)	0.8	18.8	18.8	2.4	20.4	20.4		7.0			7.0	
Actuated g/C Ratio	0.02	0.38	0.38	0.05	0.41	0.41		0.14			0.14	
Clearance Time (s)	7.0	7.0	7.0	7.0	7.0	7.0		7.0			7.0	
Vehicle Extension (s)	3.0	3.0	3.0	3.0	3.0	3.0		3.0			3.0	
Lane Grp Cap (vph)	29	1339	605	86	1386	656		205			235	
v/s Ratio Prot	0.00	0.13		c0.02	c0.28							
v/s Ratio Perm			0.01			0.00		c0.02			0.00	
v/c Ratio	0.17	0.35	0.02	0.47	0.67	0.00		0.17			0.02	
Uniform Delay, d1	23.9	10.9	9.5	22.8	11.6	8.4		18.5			18.1	
Progression Factor	1.00	1.00	1.00	1.00	1.00	1.00		1.00			1.00	
Incremental Delay, d2	2.8	0.2	0.0	3.9	1.2	0.0		0.4			0.0	
Delay (s)	26.7	11.0	9.5	26.7	12.9	8.4		18.9			18.2	
Level of Service	C	B	A	C	B	A		B			B	
Approach Delay (s)		11.1			13.4			18.9			18.2	
Approach LOS		B			B			B			B	

Intersection Summary			
HCM Average Control Delay	12.9	HCM Level of Service	B
HCM Volume to Capacity ratio	0.45		
Actuated Cycle Length (s)	49.2	Sum of lost time (s)	14.0
Intersection Capacity Utilization	49.3%	ICU Level of Service	A
Analysis Period (min)	15		

c Critical Lane Group

HCM Unsignalized Intersection Capacity Analysis
200: Tall Cedars Pkwy & West Spine Road

LCPS (HS 7)
2015 Future Background

Movement	EBL	EBR	NBL	NBT	SBT	SBR
Lane Configurations						
Volume (veh/h)	33	84	64	428	670	56
Sign Control	Stop			Free	Free	
Grade	0%			0%	0%	
Peak Hour Factor	0.92	0.92	0.92	0.92	0.92	0.92
Hourly flow rate (vph)	36	91	70	465	728	61
Pedestrians						
Lane Width (ft)						
Walking Speed (ft/s)						
Percent Blockage						
Right turn flare (veh)						
Median type				None	None	
Median storage veh)						
Upstream signal (ft)						
pX, platoon unblocked						
vC, conflicting volume	1100	364	728			
vC1, stage 1 conf vol						
vC2, stage 2 conf vol						
vCu, unblocked vol	1100	364	728			
tC, single (s)	6.8	6.9	4.1			
tC, 2 stage (s)						
tF (s)	3.5	3.3	2.2			
p0 queue free %	81	86	92			
cM capacity (veh/h)	190	633	871			

Direction, Lane #	EB 1	EB 2	NB 1	NB 2	SB 1	SB 2	SB 3
Volume Total	36	91	225	310	364	364	61
Volume Left	36	0	70	0	0	0	0
Volume Right	0	91	0	0	0	0	61
cSH	190	633	871	1700	1700	1700	1700
Volume to Capacity	0.19	0.14	0.08	0.18	0.21	0.21	0.04
Queue Length 95th (ft)	17	13	6	0	0	0	0
Control Delay (s)	28.3	11.6	3.5	0.0	0.0	0.0	0.0
Lane LOS	D	B	A				
Approach Delay (s)	16.3		1.5		0.0		
Approach LOS	C						

Intersection Summary			
Average Delay	2.0		
Intersection Capacity Utilization	45.5%	ICU Level of Service	A
Analysis Period (min)	15		

Movement	EBL	EBT	EBR	WBL	WBT	WBR	NBL	NBT	NBR	SBL	SBT	SBR
Lane Configurations												
Volume (vph)	118	242	44	90	332	158	35	179	51	128	290	111
Ideal Flow (vphpl)	1900	1900	1900	1900	1900	1900	1900	1900	1900	1900	1900	1900
Total Lost time (s)	7.0	7.0	7.0	7.0	7.0	7.0	7.0	7.0		7.0	7.0	7.0
Lane Util. Factor	1.00	1.00	1.00	1.00	1.00	1.00	1.00	0.95		1.00	0.95	1.00
Frt	1.00	1.00	0.85	1.00	1.00	0.85	1.00	0.97		1.00	1.00	0.85
Flt Protected	0.95	1.00	1.00	0.95	1.00	1.00	0.95	1.00		0.95	1.00	1.00
Satd. Flow (prot)	1770	1863	1583	1770	1863	1583	1770	3422		1770	3539	1583
Flt Permitted	0.31	1.00	1.00	0.60	1.00	1.00	0.56	1.00		0.43	1.00	1.00
Satd. Flow (perm)	578	1863	1583	1112	1863	1583	1044	3422		800	3539	1583
Peak-hour factor, PHF	0.92	0.92	0.92	0.92	0.92	0.92	0.92	0.92	0.92	0.92	0.92	0.92
Adj. Flow (vph)	128	263	48	98	361	172	38	195	55	139	315	121
RTOR Reduction (vph)	0	0	31	0	0	108	0	25	0	0	0	80
Lane Group Flow (vph)	128	263	17	98	361	64	38	225	0	139	315	41
Turn Type	pm+pt		pm+ov	pm+pt		pm+ov	pm+pt			pm+pt		pm+ov
Protected Phases	7	4	5	3	8	1	5	2		1	6	7
Permitted Phases	4		4	8		8	2			6		6
Actuated Green, G (s)	34.4	24.8	27.9	28.0	21.6	29.5	15.4	12.3		25.0	17.1	26.7
Effective Green, g (s)	34.4	24.8	27.9	28.0	21.6	29.5	15.4	12.3		25.0	17.1	26.7
Actuated g/C Ratio	0.43	0.31	0.35	0.35	0.27	0.37	0.19	0.15		0.31	0.22	0.34
Clearance Time (s)	7.0	7.0	7.0	7.0	7.0	7.0	7.0	7.0		7.0	7.0	7.0
Vehicle Extension (s)	3.0	3.0	3.0	3.0	3.0	3.0	3.0	3.0		3.0	3.0	3.0
Lane Grp Cap (vph)	395	582	696	445	507	728	231	530		348	762	672
v/s Ratio Prot	c0.04	c0.14	0.00	0.02	c0.19	0.01	0.01	0.07		c0.04	c0.09	0.01
v/s Ratio Perm	0.10		0.01	0.06		0.03	0.03			0.09		0.02
v/c Ratio	0.32	0.45	0.02	0.22	0.71	0.09	0.16	0.43		0.40	0.41	0.06
Uniform Delay, d1	14.6	21.9	16.8	17.6	26.1	16.2	26.4	30.4		20.4	26.8	17.9
Progression Factor	1.00	1.00	1.00	1.00	1.00	1.00	1.00	1.00		1.00	1.00	1.00
Incremental Delay, d2	0.5	0.6	0.0	0.3	4.7	0.1	0.3	0.6		0.8	0.4	0.0
Delay (s)	15.1	22.4	16.9	17.9	30.8	16.3	26.7	30.9		21.1	27.2	17.9
Level of Service	B	C	B	B	C	B	C	C		C	C	B
Approach Delay (s)		19.7			24.8			30.4			23.8	
Approach LOS		B			C			C			C	

Intersection Summary			
HCM Average Control Delay	24.2	HCM Level of Service	C
HCM Volume to Capacity ratio	0.65		
Actuated Cycle Length (s)	79.4	Sum of lost time (s)	35.0
Intersection Capacity Utilization	61.0%	ICU Level of Service	B
Analysis Period (min)	15		
c Critical Lane Group			

Movement	EBL	EBR	NBL	NBT	SBT	SBR
Lane Configurations						
Sign Control	Stop			Stop	Stop	
Volume (vph)	2	8	4	14	8	1
Peak Hour Factor	0.92	0.92	0.92	0.92	0.92	0.92
Hourly flow rate (vph)	2	9	4	15	9	1

Direction, Lane #	EB 1	EB 2	NB 1	NB 2	SB 1	SB 2
Volume Total (vph)	2	9	4	15	9	1
Volume Left (vph)	2	0	4	0	0	0
Volume Right (vph)	0	9	0	0	0	1
Hadj (s)	2.20	0.80	2.20	0.03	0.03	1.00
Departure Headway (s)	6.8	5.4	6.7	4.6	4.6	5.5
Degree Utilization, x	0.00	0.01	0.01	0.02	0.01	0.00
Capacity (veh/h)	517	657	525	773	780	638
Control Delay (s)	8.6	7.2	8.6	6.5	6.4	7.4
Approach Delay (s)	7.5		6.9		6.5	
Approach LOS	A		A		A	

Intersection Summary			
Delay	7.0		
HCM Level of Service	A		
Intersection Capacity Utilization	13.3%	ICU Level of Service	A
Analysis Period (min)	15		

Movement	EBL	EBR	NBL	NBT	SBT	SBR
Lane Configurations						
Sign Control	Stop			Stop	Stop	
Volume (vph)	10	73	36	8	11	5
Peak Hour Factor	0.92	0.92	0.92	0.92	0.92	0.92
Hourly flow rate (vph)	11	79	39	9	12	5

Direction, Lane #	EB 1	EB 2	NB 1	NB 2	SB 1	SB 2
Volume Total (vph)	11	79	39	9	12	5
Volume Left (vph)	11	0	39	0	0	0
Volume Right (vph)	0	79	0	0	0	5
Hadj (s)	0.53	-0.67	0.53	0.42	1.09	-0.67
Departure Headway (s)	5.2	4.0	5.2	5.1	5.8	4.1
Degree Utilization, x	0.02	0.09	0.06	0.01	0.02	0.01
Capacity (veh/h)	680	876	667	680	597	853
Control Delay (s)	7.1	6.2	7.4	7.0	7.7	5.9
Approach Delay (s)	6.3		7.3		7.2	
Approach LOS	A		A		A	

Intersection Summary			
Delay	6.7		
HCM Level of Service	A		
Intersection Capacity Utilization	18.7%	ICU Level of Service	A
Analysis Period (min)	15		

Movement	EBL	EBT	WBT	WBR	SBL	SBR
Lane Configurations						
Volume (veh/h)	35	163	231	85	97	28
Sign Control		Free	Free		Stop	
Grade		0%	0%		0%	
Peak Hour Factor	0.92	0.92	0.92	0.92	0.92	0.92
Hourly flow rate (vph)	38	177	251	92	105	30
Pedestrians						
Lane Width (ft)						
Walking Speed (ft/s)						
Percent Blockage						
Right turn flare (veh)						12
Median type		None	None			
Median storage veh)						
Upstream signal (ft)						
pX, platoon unblocked						
vC, conflicting volume	343				504	251
vC1, stage 1 conf vol						
vC2, stage 2 conf vol						
vCu, unblocked vol	343				504	251
tC, single (s)	4.1				6.5	6.2
tC, 2 stage (s)						
tF (s)	2.2				3.6	3.3
p0 queue free %	97				79	96
cM capacity (veh/h)	1216				504	783

Direction, Lane #	EB 1	WB 1	WB 2	SB 1
Volume Total	215	251	92	136
Volume Left	38	0	0	105
Volume Right	0	0	92	30
cSH	1216	1700	1700	649
Volume to Capacity	0.03	0.15	0.05	0.21
Queue Length 95th (ft)	2	0	0	20
Control Delay (s)	1.7	0.0	0.0	13.1
Lane LOS	A			B
Approach Delay (s)	1.7	0.0		13.1
Approach LOS				B

Intersection Summary			
Average Delay	3.1		
Intersection Capacity Utilization	38.0%	ICU Level of Service	A
Analysis Period (min)	15		

Movement	EBL	EBT	EBR	WBL	WBT	WBR	NBL	NBT	NBR	SBL	SBT	SBR
Lane Configurations												
Volume (vph)	16	1277	22	44	388	14	35	16	43	6	1	0
Ideal Flow (vphpl)	1900	1900	1900	1900	1900	1900	1900	1900	1900	1900	1900	1900
Total Lost time (s)	7.0	7.0	7.0	7.0	7.0	7.0		7.0			7.0	
Lane Util. Factor	1.00	0.95	1.00	1.00	0.95	1.00		1.00			1.00	
Frt	1.00	1.00	0.85	1.00	1.00	0.85		0.94			1.00	
Flt Protected	0.95	1.00	1.00	0.95	1.00	1.00		0.98			0.96	
Satd. Flow (prot)	1770	3505	1524	1770	3343	1583		1683			1785	
Flt Permitted	0.95	1.00	1.00	0.95	1.00	1.00		0.87			0.72	
Satd. Flow (perm)	1770	3505	1524	1770	3343	1583		1498			1340	
Peak-hour factor, PHF	0.92	0.92	0.92	0.92	0.92	0.92	0.92	0.92	0.92	0.92	0.92	0.92
Adj. Flow (vph)	17	1388	24	48	422	15	38	17	47	7	1	0
RTOR Reduction (vph)	0	0	8	0	0	6	0	17	0	0	0	0
Lane Group Flow (vph)	17	1388	16	48	422	9	0	85	0	0	8	0
Heavy Vehicles (%)	2%	3%	6%	2%	8%	2%	6%	2%	3%	2%	2%	2%
Turn Type	Prot		Perm	Prot		Perm	Perm			Perm		
Protected Phases	5	2		1	6			8			4	
Permitted Phases			2			6	8			4		
Actuated Green, G (s)	2.4	45.7	45.7	6.2	49.5	49.5		10.9			10.9	
Effective Green, g (s)	2.4	45.7	45.7	6.2	49.5	49.5		10.9			10.9	
Actuated g/C Ratio	0.03	0.55	0.55	0.07	0.59	0.59		0.13			0.13	
Clearance Time (s)	7.0	7.0	7.0	7.0	7.0	7.0		7.0			7.0	
Vehicle Extension (s)	3.0	3.0	3.0	3.0	3.0	3.0		3.0			3.0	
Lane Grp Cap (vph)	51	1911	831	131	1975	935		195			174	
v/s Ratio Prot	0.01	c0.40		c0.03	c0.13							
v/s Ratio Perm			0.01			0.01		c0.06			0.01	
v/c Ratio	0.33	0.73	0.02	0.37	0.21	0.01		0.44			0.05	
Uniform Delay, d1	39.9	14.3	8.8	36.9	8.0	7.1		33.6			31.9	
Progression Factor	1.00	1.00	1.00	1.00	1.00	1.00		1.00			1.00	
Incremental Delay, d2	3.8	1.4	0.0	1.7	0.1	0.0		1.6			0.1	
Delay (s)	43.7	15.7	8.8	38.7	8.1	7.1		35.2			32.0	
Level of Service	D	B	A	D	A	A		D			C	
Approach Delay (s)		16.0			11.1			35.2			32.0	
Approach LOS		B			B			D			C	

Intersection Summary			
HCM Average Control Delay	15.8	HCM Level of Service	B
HCM Volume to Capacity ratio	0.73		
Actuated Cycle Length (s)	83.8	Sum of lost time (s)	28.0
Intersection Capacity Utilization	53.3%	ICU Level of Service	A
Analysis Period (min)	15		

c Critical Lane Group

Movement	EBL	EBR	NBL	NBT	SBT	SBR
Lane Configurations						
Volume (veh/h)	58	94	87	823	312	49
Sign Control	Stop			Free	Free	
Grade	0%			0%	0%	
Peak Hour Factor	0.92	0.92	0.92	0.92	0.92	0.92
Hourly flow rate (vph)	63	102	95	895	339	53
Pedestrians						
Lane Width (ft)						
Walking Speed (ft/s)						
Percent Blockage						
Right turn flare (veh)						
Median type				None	None	
Median storage veh)						
Upstream signal (ft)						
pX, platoon unblocked						
vC, conflicting volume	976	170	339			
vC1, stage 1 conf vol						
vC2, stage 2 conf vol						
vCu, unblocked vol	976	170	339			
tC, single (s)	6.8	6.9	4.1			
tC, 2 stage (s)						
tF (s)	3.5	3.3	2.2			
p0 queue free %	73	88	92			
cM capacity (veh/h)	229	845	1217			

Direction, Lane #	EB 1	EB 2	NB 1	NB 2	SB 1	SB 2	SB 3
Volume Total	63	102	393	596	170	170	53
Volume Left	63	0	95	0	0	0	0
Volume Right	0	102	0	0	0	0	53
cSH	229	845	1217	1700	1700	1700	1700
Volume to Capacity	0.27	0.12	0.08	0.35	0.10	0.10	0.03
Queue Length 95th (ft)	27	10	6	0	0	0	0
Control Delay (s)	26.5	9.8	2.6	0.0	0.0	0.0	0.0
Lane LOS	D	A	A				
Approach Delay (s)	16.2		1.0		0.0		
Approach LOS	C						

Intersection Summary			
Average Delay	2.4		
Intersection Capacity Utilization	47.2%	ICU Level of Service	A
Analysis Period (min)	15		

HCM Signalized Intersection Capacity Analysis
300: Braddock Road & Gum Spring Road

LCPS (HS 7)
2015 Future Background

Movement	EBL	EBT	EBR	WBL	WBT	WBR	NBL	NBT	NBR	SBL	SBT	SBR
Lane Configurations												
Volume (vph)	160	417	36	72	204	154	45	327	152	253	170	79
Ideal Flow (vphpl)	1900	1900	1900	1900	1900	1900	1900	1900	1900	1900	1900	1900
Total Lost time (s)	7.0	7.0	7.0	7.0	7.0	7.0	7.0	7.0		7.0	7.0	7.0
Lane Util. Factor	1.00	1.00	1.00	1.00	1.00	1.00	1.00	0.95		1.00	0.95	1.00
Frt	1.00	1.00	0.85	1.00	1.00	0.85	1.00	0.95		1.00	1.00	0.85
Flt Protected	0.95	1.00	1.00	0.95	1.00	1.00	0.95	1.00		0.95	1.00	1.00
Satd. Flow (prot)	1770	1863	1583	1770	1863	1583	1770	3371		1770	3539	1583
Flt Permitted	0.52	1.00	1.00	0.27	1.00	1.00	0.64	1.00		0.22	1.00	1.00
Satd. Flow (perm)	973	1863	1583	502	1863	1583	1183	3371		413	3539	1583
Peak-hour factor, PHF	0.92	0.92	0.92	0.92	0.92	0.92	0.92	0.92	0.92	0.92	0.92	0.92
Adj. Flow (vph)	174	453	39	78	222	167	49	355	165	275	185	86
RTOR Reduction (vph)	0	0	26	0	0	76	0	48	0	0	0	53
Lane Group Flow (vph)	174	453	13	78	222	91	49	472	0	275	185	33
Turn Type	pm+pt		pm+ov	pm+pt		pm+ov	pm+pt			pm+pt		pm+ov
Protected Phases	7	4	5	3	8	1	5	2		1	6	7
Permitted Phases	4		4	8		8	2			6		6
Actuated Green, G (s)	34.4	29.2	32.2	30.0	27.0	41.6	21.9	18.9		40.5	30.5	35.7
Effective Green, g (s)	34.4	29.2	32.2	30.0	27.0	41.6	21.9	18.9		40.5	30.5	35.7
Actuated g/C Ratio	0.37	0.31	0.34	0.32	0.29	0.44	0.23	0.20		0.43	0.33	0.38
Clearance Time (s)	7.0	7.0	7.0	7.0	7.0	7.0	7.0	7.0		7.0	7.0	7.0
Vehicle Extension (s)	3.0	3.0	3.0	3.0	3.0	3.0	3.0	3.0		3.0	3.0	3.0
Lane Grp Cap (vph)	401	581	662	201	537	821	295	680		390	1152	721
v/s Ratio Prot	c0.02	c0.24	0.00	0.01	0.12	0.02	0.01	0.14		c0.11	0.05	0.00
v/s Ratio Perm	0.14		0.01	0.11		0.04	0.03			c0.20		0.02
v/c Ratio	0.43	0.78	0.02	0.39	0.41	0.11	0.17	0.69		0.71	0.16	0.05
Uniform Delay, d1	21.7	29.3	20.3	23.6	27.0	15.2	28.3	34.7		19.3	22.5	18.3
Progression Factor	1.00	1.00	1.00	1.00	1.00	1.00	1.00	1.00		1.00	1.00	1.00
Incremental Delay, d2	0.8	6.6	0.0	1.2	0.5	0.1	0.3	3.1		5.7	0.1	0.0
Delay (s)	22.4	35.9	20.3	24.8	27.5	15.3	28.6	37.8		25.0	22.6	18.3
Level of Service	C	D	C	C	C	B	C	D		C	C	B
Approach Delay (s)		31.5			22.7			37.0			23.1	
Approach LOS		C			C			D			C	

Intersection Summary			
HCM Average Control Delay	29.0	HCM Level of Service	C
HCM Volume to Capacity ratio	0.64		
Actuated Cycle Length (s)	93.7	Sum of lost time (s)	14.0
Intersection Capacity Utilization	77.2%	ICU Level of Service	D
Analysis Period (min)	15		
c Critical Lane Group			

HCM Unsignalized Intersection Capacity Analysis
600: Road A & North Star Blvd.

LCPS (HS 7)
2015 Future Background

Movement	EBL	EBR	NBL	NBT	SBT	SBR
Lane Configurations						
Sign Control	Stop			Stop	Stop	
Volume (vph)	1	5	10	12	18	2
Peak Hour Factor	0.92	0.92	0.92	0.92	0.92	0.92
Hourly flow rate (vph)	1	5	11	13	20	2

Direction, Lane #	EB 1	EB 2	NB 1	NB 2	SB 1	SB 2
Volume Total (vph)	1	5	11	13	20	2
Volume Left (vph)	1	0	11	0	0	0
Volume Right (vph)	0	5	0	0	0	2
Hadj (s)	2.20	-0.02	1.69	0.03	0.03	1.00
Departure Headway (s)	6.8	4.6	6.2	4.6	4.6	5.5
Degree Utilization, x	0.00	0.01	0.02	0.02	0.02	0.00
Capacity (veh/h)	513	765	569	775	783	639
Control Delay (s)	8.6	6.4	8.1	6.4	6.5	7.4
Approach Delay (s)	6.8		7.2		6.6	
Approach LOS	A		A		A	

Intersection Summary			
Delay	6.9		
HCM Level of Service	A		
Intersection Capacity Utilization	17.2%	ICU Level of Service	A
Analysis Period (min)	15		

Movement	EBL	EBR	NBL	NBT	SBT	SBR
Lane Configurations						
Sign Control	Stop			Stop	Stop	
Volume (vph)	6	42	89	16	11	12
Peak Hour Factor	0.92	0.92	0.92	0.92	0.92	0.92
Hourly flow rate (vph)	7	46	97	17	12	13

Direction, Lane #	EB 1	EB 2	NB 1	NB 2	SB 1	SB 2
Volume Total (vph)	7	46	97	17	12	13
Volume Left (vph)	7	0	97	0	0	0
Volume Right (vph)	0	46	0	0	0	13
Hadj (s)	0.53	-0.67	0.53	0.75	0.31	-0.67
Departure Headway (s)	5.4	4.2	5.2	5.4	5.0	4.0
Degree Utilization, x	0.01	0.05	0.14	0.03	0.02	0.01
Capacity (veh/h)	651	826	682	653	706	865
Control Delay (s)	7.2	6.2	7.8	7.3	6.9	5.9
Approach Delay (s)	6.3		7.7		6.4	
Approach LOS	A		A		A	

Intersection Summary			
Delay	7.2		
HCM Level of Service	A		
Intersection Capacity Utilization	21.6%	ICU Level of Service	A
Analysis Period (min)	15		

Movement	EBL	EBT	WBT	WBR	SBL	SBR
Lane Configurations						
Volume (veh/h)	46	219	92	106	100	39
Sign Control		Free	Free		Stop	
Grade		0%	0%		0%	
Peak Hour Factor	0.92	0.92	0.92	0.92	0.92	0.92
Hourly flow rate (vph)	50	238	100	115	109	42
Pedestrians						
Lane Width (ft)						
Walking Speed (ft/s)						
Percent Blockage						
Right turn flare (veh)						12
Median type		None	None			
Median storage veh)						
Upstream signal (ft)						
pX, platoon unblocked						
vC, conflicting volume	215				438	100
vC1, stage 1 conf vol						
vC2, stage 2 conf vol						
vCu, unblocked vol	215				438	100
tC, single (s)	4.1				6.4	6.2
tC, 2 stage (s)						
tF (s)	2.2				3.5	3.3
p0 queue free %	96				80	96
cM capacity (veh/h)	1355				555	956

Direction, Lane #	EB 1	WB 1	WB 2	SB 1
Volume Total	288	100	115	151
Volume Left	50	0	0	109
Volume Right	0	0	115	42
cSH	1355	1700	1700	771
Volume to Capacity	0.04	0.06	0.07	0.20
Queue Length 95th (ft)	3	0	0	18
Control Delay (s)	1.6	0.0	0.0	11.9
Lane LOS	A			B
Approach Delay (s)	1.6	0.0		11.9
Approach LOS				B

Intersection Summary			
Average Delay	3.5		
Intersection Capacity Utilization	32.9%	ICU Level of Service	A
Analysis Period (min)	15		

HCM Signalized Intersection Capacity Analysis
100: Route 50 & Goshen Road

LCPS (HS 7)
2015 Future Background

Movement	EBL	EBT	EBR	WBL	WBT	WBR	NBL	NBT	NBR	SBL	SBT	SBR
Lane Configurations												
Volume (vph)	5	435	31	37	850	2	22	1	37	1	3	2
Ideal Flow (vphpl)	1900	1900	1900	1900	1900	1900	1900	1900	1900	1900	1900	1900
Total Lost time (s)	7.0	7.0	7.0	7.0	7.0	7.0		7.0			7.0	
Lane Util. Factor	1.00	0.95	1.00	1.00	0.95	1.00		1.00			1.00	
Frt	1.00	1.00	0.85	1.00	1.00	0.85		0.92			0.95	
Flt Protected	0.95	1.00	1.00	0.95	1.00	1.00		0.98			0.99	
Satd. Flow (prot)	1770	3505	1583	1770	3343	1583		1613			1764	
Flt Permitted	0.95	1.00	1.00	0.95	1.00	1.00		0.88			0.93	
Satd. Flow (perm)	1770	3505	1583	1770	3343	1583		1439			1649	
Peak-hour factor, PHF	0.92	0.92	0.92	0.92	0.92	0.92	0.92	0.92	0.92	0.92	0.92	0.92
Adj. Flow (vph)	5	473	34	40	924	2	24	1	40	1	3	2
RTOR Reduction (vph)	0	0	21	0	0	1	0	31	0	0	2	0
Lane Group Flow (vph)	5	473	13	40	924	1	0	34	0	0	4	0
Heavy Vehicles (%)	2%	3%	2%	2%	8%	2%	8%	2%	5%	2%	2%	2%
Turn Type	Prot		Perm	Prot		Perm	Perm			Perm		
Protected Phases	5	2		1	6			8			4	
Permitted Phases			2			6	8			4		
Actuated Green, G (s)	0.8	18.8	18.8	2.4	20.4	20.4		7.0			7.0	
Effective Green, g (s)	0.8	18.8	18.8	2.4	20.4	20.4		7.0			7.0	
Actuated g/C Ratio	0.02	0.38	0.38	0.05	0.41	0.41		0.14			0.14	
Clearance Time (s)	7.0	7.0	7.0	7.0	7.0	7.0		7.0			7.0	
Vehicle Extension (s)	3.0	3.0	3.0	3.0	3.0	3.0		3.0			3.0	
Lane Grp Cap (vph)	29	1339	605	86	1386	656		205			235	
v/s Ratio Prot	0.00	0.13		c0.02	c0.28							
v/s Ratio Perm			0.01			0.00		c0.02			0.00	
v/c Ratio	0.17	0.35	0.02	0.47	0.67	0.00		0.17			0.02	
Uniform Delay, d1	23.9	10.9	9.5	22.8	11.6	8.4		18.5			18.1	
Progression Factor	1.00	1.00	1.00	1.00	1.00	1.00		1.00			1.00	
Incremental Delay, d2	2.8	0.2	0.0	3.9	1.2	0.0		0.4			0.0	
Delay (s)	26.7	11.0	9.5	26.7	12.9	8.4		18.9			18.2	
Level of Service	C	B	A	C	B	A		B			B	
Approach Delay (s)		11.1			13.4			18.9			18.2	
Approach LOS		B			B			B			B	

Intersection Summary			
HCM Average Control Delay	12.9	HCM Level of Service	B
HCM Volume to Capacity ratio	0.45		
Actuated Cycle Length (s)	49.2	Sum of lost time (s)	14.0
Intersection Capacity Utilization	49.3%	ICU Level of Service	A
Analysis Period (min)	15		

c Critical Lane Group

HCM Unsignalized Intersection Capacity Analysis
200: Tall Cedars Pkwy & West Spine Road

LCPS (HS 7)
2015 Future Background

Movement	EBL	EBR	NBL	NBT	SBT	SBR
Lane Configurations						
Volume (veh/h)	33	84	64	428	670	56
Sign Control	Stop			Free	Free	
Grade	0%			0%	0%	
Peak Hour Factor	0.92	0.92	0.92	0.92	0.92	0.92
Hourly flow rate (vph)	36	91	70	465	728	61
Pedestrians						
Lane Width (ft)						
Walking Speed (ft/s)						
Percent Blockage						
Right turn flare (veh)						
Median type				None	None	
Median storage veh)						
Upstream signal (ft)						
pX, platoon unblocked						
vC, conflicting volume	1100	364	728			
vC1, stage 1 conf vol						
vC2, stage 2 conf vol						
vCu, unblocked vol	1100	364	728			
tC, single (s)	6.8	6.9	4.1			
tC, 2 stage (s)						
tF (s)	3.5	3.3	2.2			
p0 queue free %	81	86	92			
cM capacity (veh/h)	190	633	871			

Direction, Lane #	EB 1	EB 2	NB 1	NB 2	SB 1	SB 2	SB 3
Volume Total	36	91	225	310	364	364	61
Volume Left	36	0	70	0	0	0	0
Volume Right	0	91	0	0	0	0	61
cSH	190	633	871	1700	1700	1700	1700
Volume to Capacity	0.19	0.14	0.08	0.18	0.21	0.21	0.04
Queue Length 95th (ft)	17	13	6	0	0	0	0
Control Delay (s)	28.3	11.6	3.5	0.0	0.0	0.0	0.0
Lane LOS	D	B	A				
Approach Delay (s)	16.3		1.5		0.0		
Approach LOS	C						

Intersection Summary			
Average Delay	2.0		
Intersection Capacity Utilization	45.5%	ICU Level of Service	A
Analysis Period (min)	15		

HCM Signalized Intersection Capacity Analysis
300: Braddock Road & Gum Spring Road

LCPS (HS 7)
2015 Future Background

Movement	EBL	EBT	EBR	WBL	WBT	WBR	NBL	NBT	NBR	SBL	SBT	SBR
Lane Configurations												
Volume (vph)	118	242	44	90	332	158	35	179	51	128	290	111
Ideal Flow (vphpl)	1900	1900	1900	1900	1900	1900	1900	1900	1900	1900	1900	1900
Total Lost time (s)	7.0	7.0	7.0	7.0	7.0	7.0	7.0	7.0		7.0	7.0	7.0
Lane Util. Factor	1.00	1.00	1.00	1.00	1.00	1.00	1.00	0.95		1.00	0.95	1.00
Frt	1.00	1.00	0.85	1.00	1.00	0.85	1.00	0.97		1.00	1.00	0.85
Flt Protected	0.95	1.00	1.00	0.95	1.00	1.00	0.95	1.00		0.95	1.00	1.00
Satd. Flow (prot)	1770	1863	1583	1770	1863	1583	1770	3422		1770	3539	1583
Flt Permitted	0.31	1.00	1.00	0.60	1.00	1.00	0.56	1.00		0.43	1.00	1.00
Satd. Flow (perm)	578	1863	1583	1112	1863	1583	1044	3422		800	3539	1583
Peak-hour factor, PHF	0.92	0.92	0.92	0.92	0.92	0.92	0.92	0.92	0.92	0.92	0.92	0.92
Adj. Flow (vph)	128	263	48	98	361	172	38	195	55	139	315	121
RTOR Reduction (vph)	0	0	31	0	0	108	0	25	0	0	0	80
Lane Group Flow (vph)	128	263	17	98	361	64	38	225	0	139	315	41
Turn Type	pm+pt		pm+ov	pm+pt		pm+ov	pm+pt			pm+pt		pm+ov
Protected Phases	7	4	5	3	8	1	5	2		1	6	7
Permitted Phases	4		4	8		8	2			6		6
Actuated Green, G (s)	34.4	24.8	27.9	28.0	21.6	29.5	15.4	12.3		25.0	17.1	26.7
Effective Green, g (s)	34.4	24.8	27.9	28.0	21.6	29.5	15.4	12.3		25.0	17.1	26.7
Actuated g/C Ratio	0.43	0.31	0.35	0.35	0.27	0.37	0.19	0.15		0.31	0.22	0.34
Clearance Time (s)	7.0	7.0	7.0	7.0	7.0	7.0	7.0	7.0		7.0	7.0	7.0
Vehicle Extension (s)	3.0	3.0	3.0	3.0	3.0	3.0	3.0	3.0		3.0	3.0	3.0
Lane Grp Cap (vph)	395	582	696	445	507	728	231	530		348	762	672
v/s Ratio Prot	c0.04	c0.14	0.00	0.02	c0.19	0.01	0.01	0.07		c0.04	c0.09	0.01
v/s Ratio Perm	0.10		0.01	0.06		0.03	0.03			0.09		0.02
v/c Ratio	0.32	0.45	0.02	0.22	0.71	0.09	0.16	0.43		0.40	0.41	0.06
Uniform Delay, d1	14.6	21.9	16.8	17.6	26.1	16.2	26.4	30.4		20.4	26.8	17.9
Progression Factor	1.00	1.00	1.00	1.00	1.00	1.00	1.00	1.00		1.00	1.00	1.00
Incremental Delay, d2	0.5	0.6	0.0	0.3	4.7	0.1	0.3	0.6		0.8	0.4	0.0
Delay (s)	15.1	22.4	16.9	17.9	30.8	16.3	26.7	30.9		21.1	27.2	17.9
Level of Service	B	C	B	B	C	B	C	C		C	C	B
Approach Delay (s)		19.7			24.8			30.4			23.8	
Approach LOS		B			C			C			C	

Intersection Summary			
HCM Average Control Delay	24.2	HCM Level of Service	C
HCM Volume to Capacity ratio	0.65		
Actuated Cycle Length (s)	79.4	Sum of lost time (s)	35.0
Intersection Capacity Utilization	61.0%	ICU Level of Service	B
Analysis Period (min)	15		
c Critical Lane Group			

HCM Unsignalized Intersection Capacity Analysis
600: Road A & North Star Blvd.

LCPS (HS 7)
2015 Future Background

Movement	EBL	EBR	NBL	NBT	SBT	SBR
Lane Configurations						
Sign Control	Stop			Stop	Stop	
Volume (vph)	2	8	4	14	8	1
Peak Hour Factor	0.92	0.92	0.92	0.92	0.92	0.92
Hourly flow rate (vph)	2	9	4	15	9	1

Direction, Lane #	EB 1	EB 2	NB 1	NB 2	SB 1	SB 2
Volume Total (vph)	2	9	4	15	9	1
Volume Left (vph)	2	0	4	0	0	0
Volume Right (vph)	0	9	0	0	0	1
Hadj (s)	2.20	0.80	2.20	0.03	0.03	1.00
Departure Headway (s)	6.8	5.4	6.7	4.6	4.6	5.5
Degree Utilization, x	0.00	0.01	0.01	0.02	0.01	0.00
Capacity (veh/h)	517	657	525	773	780	638
Control Delay (s)	8.6	7.2	8.6	6.5	6.4	7.4
Approach Delay (s)	7.5		6.9		6.5	
Approach LOS	A		A		A	

Intersection Summary			
Delay	7.0		
HCM Level of Service	A		
Intersection Capacity Utilization	13.3%	ICU Level of Service	A
Analysis Period (min)	15		

Movement	EBL	EBR	NBL	NBT	SBT	SBR
Lane Configurations						
Sign Control	Stop			Stop	Stop	
Volume (vph)	10	73	36	8	11	5
Peak Hour Factor	0.92	0.92	0.92	0.92	0.92	0.92
Hourly flow rate (vph)	11	79	39	9	12	5

Direction, Lane #	EB 1	EB 2	NB 1	NB 2	SB 1	SB 2
Volume Total (vph)	11	79	39	9	12	5
Volume Left (vph)	11	0	39	0	0	0
Volume Right (vph)	0	79	0	0	0	5
Hadj (s)	0.53	-0.67	0.53	0.42	1.09	-0.67
Departure Headway (s)	5.2	4.0	5.2	5.1	5.8	4.1
Degree Utilization, x	0.02	0.09	0.06	0.01	0.02	0.01
Capacity (veh/h)	680	876	667	680	597	853
Control Delay (s)	7.1	6.2	7.4	7.0	7.7	5.9
Approach Delay (s)	6.3		7.3		7.2	
Approach LOS	A		A		A	

Intersection Summary			
Delay	6.7		
HCM Level of Service	A		
Intersection Capacity Utilization	18.7%	ICU Level of Service	A
Analysis Period (min)	15		

Movement	EBL	EBT	WBT	WBR	SBL	SBR
Lane Configurations						
Volume (veh/h)	35	163	231	85	97	28
Sign Control		Free	Free		Stop	
Grade		0%	0%		0%	
Peak Hour Factor	0.92	0.92	0.92	0.92	0.92	0.92
Hourly flow rate (vph)	38	177	251	92	105	30
Pedestrians						
Lane Width (ft)						
Walking Speed (ft/s)						
Percent Blockage						
Right turn flare (veh)						12
Median type		None	None			
Median storage veh)						
Upstream signal (ft)						
pX, platoon unblocked						
vC, conflicting volume	343				504	251
vC1, stage 1 conf vol						
vC2, stage 2 conf vol						
vCu, unblocked vol	343				504	251
tC, single (s)	4.1				6.5	6.2
tC, 2 stage (s)						
tF (s)	2.2				3.6	3.3
p0 queue free %	97				79	96
cM capacity (veh/h)	1216				504	783

Direction, Lane #	EB 1	WB 1	WB 2	SB 1
Volume Total	215	251	92	136
Volume Left	38	0	0	105
Volume Right	0	0	92	30
cSH	1216	1700	1700	649
Volume to Capacity	0.03	0.15	0.05	0.21
Queue Length 95th (ft)	2	0	0	20
Control Delay (s)	1.7	0.0	0.0	13.1
Lane LOS	A			B
Approach Delay (s)	1.7	0.0		13.1
Approach LOS				B

Intersection Summary			
Average Delay	3.1		
Intersection Capacity Utilization	38.0%	ICU Level of Service	A
Analysis Period (min)	15		

APPENDIX L-1

INTERSECTION CAPACITY ANALYSIS RESULTS– FUTURE CONDITIONS WITH PROPOSED DEVELOPMENT (2015) – HS PEAK, ALTERNATIVE 1

HCM Signalized Intersection Capacity Analysis
100: Route 50 & Goshen Road

LCPS (HS 7)
2015 Total Future

Movement	EBL	EBT	EBR	WBL	WBT	WBR	NBL	NBT	NBR	SBL	SBT	SBR
Lane Configurations												
Volume (vph)	10	1006	55	88	438	12	51	9	77	5	1	0
Ideal Flow (vphpl)	1900	1900	1900	1900	1900	1900	1900	1900	1900	1900	1900	1900
Total Lost time (s)	7.0	7.0	7.0	7.0	7.0	7.0		7.0			7.0	
Lane Util. Factor	1.00	0.95	1.00	1.00	0.95	1.00		1.00			1.00	
Frt	1.00	1.00	0.85	1.00	1.00	0.85		0.92			1.00	
Flt Protected	0.95	1.00	1.00	0.95	1.00	1.00		0.98			0.96	
Satd. Flow (prot)	1770	3505	1553	1736	3343	1583		1674			1788	
Flt Permitted	0.95	1.00	1.00	0.95	1.00	1.00		0.88			0.82	
Satd. Flow (perm)	1770	3505	1553	1736	3343	1583		1494			1524	
Peak-hour factor, PHF	0.92	0.92	0.92	0.92	0.92	0.92	0.92	0.92	0.92	0.92	0.92	0.92
Adj. Flow (vph)	11	1093	60	96	476	13	55	10	84	5	1	0
RTOR Reduction (vph)	0	0	30	0	0	5	0	25	0	0	0	0
Lane Group Flow (vph)	11	1093	30	96	476	8	0	124	0	0	6	0
Heavy Vehicles (%)	2%	3%	4%	4%	8%	2%	3%	2%	3%	2%	2%	2%
Turn Type	Prot		Perm	Prot		Perm	Perm			Perm		
Protected Phases	5	2		1	6			8			4	
Permitted Phases			2			6	8			4		
Actuated Green, G (s)	1.2	40.3	40.3	10.5	49.6	49.6		12.5			12.5	
Effective Green, g (s)	1.2	40.3	40.3	10.5	49.6	49.6		12.5			12.5	
Actuated g/C Ratio	0.01	0.48	0.48	0.12	0.59	0.59		0.15			0.15	
Clearance Time (s)	7.0	7.0	7.0	7.0	7.0	7.0		7.0			7.0	
Vehicle Extension (s)	3.0	3.0	3.0	3.0	3.0	3.0		3.0			3.0	
Lane Grp Cap (vph)	25	1676	742	216	1967	931		222			226	
v/s Ratio Prot	0.01	c0.31		c0.06	0.14							
v/s Ratio Perm			0.02			0.00		c0.08			0.00	
v/c Ratio	0.44	0.65	0.04	0.44	0.24	0.01		0.56			0.03	
Uniform Delay, d1	41.2	16.7	11.7	34.2	8.3	7.2		33.3			30.7	
Progression Factor	1.00	1.00	1.00	1.00	1.00	1.00		1.00			1.00	
Incremental Delay, d2	11.9	0.9	0.0	1.5	0.1	0.0		3.0			0.0	
Delay (s)	53.1	17.6	11.7	35.7	8.4	7.2		36.4			30.7	
Level of Service	D	B	B	D	A	A		D			C	
Approach Delay (s)		17.6			12.8			36.4			30.7	
Approach LOS		B			B			D			C	

Intersection Summary			
HCM Average Control Delay	17.7	HCM Level of Service	B
HCM Volume to Capacity ratio	0.60		
Actuated Cycle Length (s)	84.3	Sum of lost time (s)	21.0
Intersection Capacity Utilization	57.8%	ICU Level of Service	B
Analysis Period (min)	15		

c Critical Lane Group

HCM Unsignalized Intersection Capacity Analysis
200: Tall Cedars Pkwy & West Spine Road

LCPS (HS 7)
2015 Total Future

Movement	EBL	EBR	NBL	NBT	SBT	SBR
Lane Configurations						
Volume (veh/h)	51	84	53	886	390	48
Sign Control	Stop			Free	Free	
Grade	0%			0%	0%	
Peak Hour Factor	0.92	0.92	0.92	0.92	0.92	0.92
Hourly flow rate (vph)	55	91	58	963	424	52
Pedestrians						
Lane Width (ft)						
Walking Speed (ft/s)						
Percent Blockage						
Right turn flare (veh)						
Median type				None	None	
Median storage veh)						
Upstream signal (ft)						
pX, platoon unblocked						
vC, conflicting volume	1021	212	424			
vC1, stage 1 conf vol						
vC2, stage 2 conf vol						
vCu, unblocked vol	1021	212	424			
tC, single (s)	6.8	6.9	4.1			
tC, 2 stage (s)						
tF (s)	3.5	3.3	2.2			
p0 queue free %	75	88	95			
cM capacity (veh/h)	221	793	1132			

Direction, Lane #	EB 1	EB 2	NB 1	NB 2	SB 1	SB 2	SB 3
Volume Total	55	91	379	642	212	212	52
Volume Left	55	0	58	0	0	0	0
Volume Right	0	91	0	0	0	0	52
cSH	221	793	1132	1700	1700	1700	1700
Volume to Capacity	0.25	0.12	0.05	0.38	0.12	0.12	0.03
Queue Length 95th (ft)	24	10	4	0	0	0	0
Control Delay (s)	26.7	10.1	1.7	0.0	0.0	0.0	0.0
Lane LOS	D	B	A				
Approach Delay (s)	16.4		0.6		0.0		
Approach LOS	C						

Intersection Summary			
Average Delay	1.9		
Intersection Capacity Utilization	50.1%	ICU Level of Service	A
Analysis Period (min)	15		

HCM Signalized Intersection Capacity Analysis
300: Braddock Road & Gum Spring Road

LCPS (HS 7)
2015 Total Future

Movement	EBL	EBT	EBR	WBL	WBT	WBR	NBL	NBT	NBR	SBL	SBT	SBR
Lane Configurations												
Volume (vph)	170	564	51	92	296	263	43	291	119	311	191	92
Ideal Flow (vphpl)	1900	1900	1900	1900	1900	1900	1900	1900	1900	1900	1900	1900
Total Lost time (s)	7.0	7.0	7.0	7.0	7.0	7.0	7.0	7.0		7.0	7.0	7.0
Lane Util. Factor	1.00	1.00	1.00	1.00	1.00	1.00	1.00	0.95		1.00	0.95	1.00
Frt	1.00	1.00	0.85	1.00	1.00	0.85	1.00	0.96		1.00	1.00	0.85
Flt Protected	0.95	1.00	1.00	0.95	1.00	1.00	0.95	1.00		0.95	1.00	1.00
Satd. Flow (prot)	1770	1863	1583	1770	1863	1583	1770	3385		1770	3539	1583
Flt Permitted	0.43	1.00	1.00	0.12	1.00	1.00	0.62	1.00		0.24	1.00	1.00
Satd. Flow (perm)	802	1863	1583	217	1863	1583	1157	3385		449	3539	1583
Peak-hour factor, PHF	0.92	0.92	0.92	0.92	0.92	0.92	0.92	0.92	0.92	0.92	0.92	0.92
Adj. Flow (vph)	185	613	55	100	322	286	47	316	129	338	208	100
RTOR Reduction (vph)	0	0	34	0	0	70	0	40	0	0	0	65
Lane Group Flow (vph)	185	613	21	100	322	216	47	405	0	338	208	35
Turn Type	pm+pt		pm+ov	pm+pt		pm+ov	pm+pt			pm+pt		pm+ov
Protected Phases	7	4	5	3	8	1	5	2		1	6	7
Permitted Phases	4		4	8		8	2			6		6
Actuated Green, G (s)	42.3	37.2	40.3	40.1	36.1	52.8	21.2	18.1		41.8	31.7	36.8
Effective Green, g (s)	42.3	37.2	40.3	40.1	36.1	52.8	21.2	18.1		41.8	31.7	36.8
Actuated g/C Ratio	0.41	0.36	0.39	0.39	0.35	0.51	0.20	0.17		0.40	0.30	0.35
Clearance Time (s)	7.0	7.0	7.0	7.0	7.0	7.0	7.0	7.0		7.0	7.0	7.0
Vehicle Extension (s)	3.0	3.0	3.0	3.0	3.0	3.0	3.0	3.0		3.0	3.0	3.0
Lane Grp Cap (vph)	374	666	720	143	647	910	254	589		393	1079	667
v/s Ratio Prot	0.02	c0.33	0.00	c0.03	0.17	0.04	0.01	0.12		c0.14	0.06	0.00
v/s Ratio Perm	0.18		0.01	0.24		0.10	0.03			c0.21		0.02
v/c Ratio	0.49	0.92	0.03	0.70	0.50	0.24	0.19	0.69		0.86	0.19	0.05
Uniform Delay, d1	22.9	32.0	19.7	24.6	26.8	14.3	33.9	40.3		24.2	26.7	22.1
Progression Factor	1.00	1.00	1.00	1.00	1.00	1.00	1.00	1.00		1.00	1.00	1.00
Incremental Delay, d2	1.0	18.1	0.0	13.9	0.6	0.1	0.4	3.3		17.2	0.1	0.0
Delay (s)	24.0	50.1	19.8	38.5	27.4	14.5	34.2	43.6		41.4	26.8	22.2
Level of Service	C	D	B	D	C	B	C	D		D	C	C
Approach Delay (s)		42.5			23.7			42.7			33.7	
Approach LOS		D			C			D			C	

Intersection Summary			
HCM Average Control Delay	35.5	HCM Level of Service	D
HCM Volume to Capacity ratio	0.78		
Actuated Cycle Length (s)	104.0	Sum of lost time (s)	14.0
Intersection Capacity Utilization	87.2%	ICU Level of Service	E
Analysis Period (min)	15		
c Critical Lane Group			

HCM Unsignalized Intersection Capacity Analysis
600: Road A & North Star Blvd.

LCPS (HS 7)
2015 Total Future

Movement	EBL	EBR	NBL	NBT	SBT	SBR
Lane Configurations						
Sign Control	Stop			Stop	Stop	
Volume (vph)	10	13	27	68	139	21
Peak Hour Factor	0.92	0.92	0.92	0.92	0.92	0.92
Hourly flow rate (vph)	11	14	29	74	151	23

Direction, Lane #	EB 1	EB 2	NB 1	NB 2	SB 1	SB 2
Volume Total (vph)	11	14	29	74	151	23
Volume Left (vph)	11	0	29	0	0	0
Volume Right (vph)	0	14	0	0	0	23
Hadj (s)	1.35	1.00	1.50	0.03	0.03	0.44
Departure Headway (s)	6.5	6.1	6.2	4.7	4.7	5.1
Degree Utilization, x	0.02	0.02	0.05	0.10	0.20	0.03
Capacity (veh/h)	524	556	568	743	749	691
Control Delay (s)	8.4	8.1	8.3	7.1	7.6	7.1
Approach Delay (s)	8.2		7.4		7.6	
Approach LOS	A		A		A	

Intersection Summary			
Delay	7.6		
HCM Level of Service	A		
Intersection Capacity Utilization	24.0%	ICU Level of Service	A
Analysis Period (min)	15		

Movement	EBL	EBR	NBL	NBT	SBT	SBR
Lane Configurations						
Sign Control	Stop			Stop	Stop	
Volume (vph)	62	113	241	39	25	133
Peak Hour Factor	0.92	0.92	0.92	0.92	0.92	0.92
Hourly flow rate (vph)	67	123	262	42	27	145

Direction, Lane #	EB 1	EB 2	NB 1	NB 2	SB 1	SB 2
Volume Total (vph)	67	123	262	42	27	145
Volume Left (vph)	67	0	262	0	0	0
Volume Right (vph)	0	123	0	0	0	145
Hadj (s)	0.53	-0.67	0.53	0.90	0.32	-0.67
Departure Headway (s)	6.2	5.0	5.7	6.1	5.7	4.7
Degree Utilization, x	0.12	0.17	0.42	0.07	0.04	0.19
Capacity (veh/h)	540	665	612	569	600	729
Control Delay (s)	8.8	7.9	11.6	8.4	7.8	7.6
Approach Delay (s)	8.2		11.1		7.6	
Approach LOS	A		B		A	

Intersection Summary			
Delay	9.4		
HCM Level of Service	A		
Intersection Capacity Utilization	30.1%	ICU Level of Service	A
Analysis Period (min)	15		

Movement	EBL	EBT	WBT	WBR	SBL	SBR
Lane Configurations						
Volume (veh/h)	88	290	183	224	156	65
Sign Control		Free	Free		Stop	
Grade		0%	0%		0%	
Peak Hour Factor	0.92	0.92	0.92	0.92	0.92	0.92
Hourly flow rate (vph)	96	315	199	243	170	71
Pedestrians						
Lane Width (ft)						
Walking Speed (ft/s)						
Percent Blockage						
Right turn flare (veh)						12
Median type		None	None			
Median storage veh)						
Upstream signal (ft)						
pX, platoon unblocked						
vC, conflicting volume	442				705	199
vC1, stage 1 conf vol						
vC2, stage 2 conf vol						
vCu, unblocked vol	442				705	199
tC, single (s)	4.1				6.4	6.2
tC, 2 stage (s)						
tF (s)	2.2				3.5	3.3
p0 queue free %	91				54	92
cM capacity (veh/h)	1102				368	842

Direction, Lane #	EB 1	WB 1	WB 2	SB 1
Volume Total	411	199	243	240
Volume Left	96	0	0	170
Volume Right	0	0	243	71
cSH	1102	1700	1700	521
Volume to Capacity	0.09	0.12	0.14	0.46
Queue Length 95th (ft)	7	0	0	60
Control Delay (s)	2.7	0.0	0.0	19.0
Lane LOS	A			C
Approach Delay (s)	2.7	0.0		19.0
Approach LOS				C

Intersection Summary			
Average Delay	5.2		
Intersection Capacity Utilization	48.4%	ICU Level of Service	A
Analysis Period (min)	15		

HCM Signalized Intersection Capacity Analysis
100: Route 50 & Goshen Road

LCPS (HS 7)
2015 Total Future

Movement	EBL	EBT	EBR	WBL	WBT	WBR	NBL	NBT	NBR	SBL	SBT	SBR
Lane Configurations												
Volume (vph)	1	402	45	60	1293	5	40	1	81	1	8	5
Ideal Flow (vphpl)	1900	1900	1900	1900	1900	1900	1900	1900	1900	1900	1900	1900
Total Lost time (s)	7.0	7.0	7.0	7.0	7.0	7.0		7.0			7.0	
Lane Util. Factor	1.00	0.95	1.00	1.00	0.95	1.00		1.00			1.00	
Frt	1.00	1.00	0.85	1.00	1.00	0.85		0.91			0.95	
Flt Protected	0.95	1.00	1.00	0.95	1.00	1.00		0.98			1.00	
Satd. Flow (prot)	1770	3505	1553	1736	3343	1583		1611			1773	
Flt Permitted	0.95	1.00	1.00	0.95	1.00	1.00		0.89			0.97	
Satd. Flow (perm)	1770	3505	1553	1736	3343	1583		1449			1731	
Peak-hour factor, PHF	0.92	0.92	0.92	0.92	0.92	0.92	0.92	0.92	0.92	0.92	0.92	0.92
Adj. Flow (vph)	1	437	49	65	1405	5	43	1	88	1	9	5
RTOR Reduction (vph)	0	0	27	0	0	1	0	38	0	0	4	0
Lane Group Flow (vph)	1	437	22	65	1405	4	0	94	0	0	11	0
Heavy Vehicles (%)	2%	3%	4%	4%	8%	2%	7%	2%	5%	2%	2%	2%
Turn Type	Prot		Perm	Prot		Perm	Perm			Perm		
Protected Phases	5	2		1	6			8			4	
Permitted Phases			2			6	8			4		
Actuated Green, G (s)	0.7	31.2	31.2	7.1	37.6	37.6		10.8			10.8	
Effective Green, g (s)	0.7	31.2	31.2	7.1	37.6	37.6		10.8			10.8	
Actuated g/C Ratio	0.01	0.45	0.45	0.10	0.54	0.54		0.15			0.15	
Clearance Time (s)	7.0	7.0	7.0	7.0	7.0	7.0		7.0			7.0	
Vehicle Extension (s)	3.0	3.0	3.0	3.0	3.0	3.0		3.0			3.0	
Lane Grp Cap (vph)	18	1560	691	176	1793	849		223			267	
v/s Ratio Prot	0.00	0.12		c0.04	c0.42							
v/s Ratio Perm			0.01			0.00		c0.06			0.01	
v/c Ratio	0.06	0.28	0.03	0.37	0.78	0.00		0.42			0.04	
Uniform Delay, d1	34.4	12.3	10.9	29.4	13.0	7.6		26.8			25.2	
Progression Factor	1.00	1.00	1.00	1.00	1.00	1.00		1.00			1.00	
Incremental Delay, d2	1.3	0.1	0.0	1.3	2.3	0.0		1.3			0.1	
Delay (s)	35.7	12.4	11.0	30.7	15.3	7.6		28.1			25.3	
Level of Service	D	B	B	C	B	A		C			C	
Approach Delay (s)		12.3			16.0			28.1			25.3	
Approach LOS		B			B			C			C	

Intersection Summary			
HCM Average Control Delay	16.0	HCM Level of Service	B
HCM Volume to Capacity ratio	0.73		
Actuated Cycle Length (s)	70.1	Sum of lost time (s)	21.0
Intersection Capacity Utilization	70.5%	ICU Level of Service	C
Analysis Period (min)	15		

c Critical Lane Group

HCM Unsignalized Intersection Capacity Analysis
200: Tall Cedars Pkwy & West Spine Road

LCPS (HS 7)
2015 Total Future

Movement	EBL	EBR	NBL	NBT	SBT	SBR
Lane Configurations						
Volume (veh/h)	38	78	67	437	780	67
Sign Control	Stop			Free	Free	
Grade	0%			0%	0%	
Peak Hour Factor	0.92	0.92	0.92	0.92	0.92	0.92
Hourly flow rate (vph)	41	85	73	475	848	73
Pedestrians						
Lane Width (ft)						
Walking Speed (ft/s)						
Percent Blockage						
Right turn flare (veh)						
Median type				None	None	
Median storage veh)						
Upstream signal (ft)						
pX, platoon unblocked						
vC, conflicting volume	1231	424	848			
vC1, stage 1 conf vol						
vC2, stage 2 conf vol						
vCu, unblocked vol	1231	424	848			
tC, single (s)	6.8	6.9	4.1			
tC, 2 stage (s)						
tF (s)	3.5	3.3	2.2			
p0 queue free %	73	85	91			
cM capacity (veh/h)	154	579	785			

Direction, Lane #	EB 1	EB 2	NB 1	NB 2	SB 1	SB 2	SB 3
Volume Total	41	85	231	317	424	424	73
Volume Left	41	0	73	0	0	0	0
Volume Right	0	85	0	0	0	0	73
cSH	154	579	785	1700	1700	1700	1700
Volume to Capacity	0.27	0.15	0.09	0.19	0.25	0.25	0.04
Queue Length 95th (ft)	26	13	8	0	0	0	0
Control Delay (s)	36.8	12.3	3.9	0.0	0.0	0.0	0.0
Lane LOS	E	B	A				
Approach Delay (s)	20.3		1.6		0.0		
Approach LOS	C						

Intersection Summary			
Average Delay	2.2		
Intersection Capacity Utilization	48.9%	ICU Level of Service	A
Analysis Period (min)	15		

HCM Signalized Intersection Capacity Analysis
300: Braddock Road & Gum Spring Road

LCPS (HS 7)
2015 Total Future

Movement	EBL	EBT	EBR	WBL	WBT	WBR	NBL	NBT	NBR	SBL	SBT	SBR
Lane Configurations												
Volume (vph)	140	217	57	144	269	150	44	183	65	133	338	119
Ideal Flow (vphpl)	1900	1900	1900	1900	1900	1900	1900	1900	1900	1900	1900	1900
Total Lost time (s)	7.0	7.0	7.0	7.0	7.0	7.0	7.0	7.0		7.0	7.0	7.0
Lane Util. Factor	1.00	1.00	1.00	1.00	1.00	1.00	1.00	0.95		1.00	0.95	1.00
Frt	1.00	1.00	0.85	1.00	1.00	0.85	1.00	0.96		1.00	1.00	0.85
Flt Protected	0.95	1.00	1.00	0.95	1.00	1.00	0.95	1.00		0.95	1.00	1.00
Satd. Flow (prot)	1770	1863	1583	1770	1863	1583	1770	3400		1770	3539	1583
Flt Permitted	0.42	1.00	1.00	0.57	1.00	1.00	0.53	1.00		0.42	1.00	1.00
Satd. Flow (perm)	787	1863	1583	1059	1863	1583	993	3400		784	3539	1583
Peak-hour factor, PHF	0.92	0.92	0.92	0.92	0.92	0.92	0.92	0.92	0.92	0.92	0.92	0.92
Adj. Flow (vph)	152	236	62	157	292	163	48	199	71	145	367	129
RTOR Reduction (vph)	0	0	45	0	0	109	0	34	0	0	0	83
Lane Group Flow (vph)	152	236	17	157	292	54	48	236	0	145	367	46
Turn Type	pm+pt		pm+ov	pm+pt		pm+ov	pm+pt			pm+pt		pm+ov
Protected Phases	7	4	5	3	8	1	5	2		1	6	7
Permitted Phases	4		4	8		8	2			6		6
Actuated Green, G (s)	27.3	17.4	20.5	26.3	16.9	24.8	15.4	12.3		25.0	17.1	27.0
Effective Green, g (s)	27.3	17.4	20.5	26.3	16.9	24.8	15.4	12.3		25.0	17.1	27.0
Actuated g/C Ratio	0.36	0.23	0.27	0.35	0.23	0.33	0.21	0.16		0.33	0.23	0.36
Clearance Time (s)	7.0	7.0	7.0	7.0	7.0	7.0	7.0	7.0		7.0	7.0	7.0
Vehicle Extension (s)	3.0	3.0	3.0	3.0	3.0	3.0	3.0	3.0		3.0	3.0	3.0
Lane Grp Cap (vph)	416	432	580	460	420	671	236	558		365	807	718
v/s Ratio Prot	c0.05	0.13	0.00	0.04	c0.16	0.01	0.01	0.07		c0.04	c0.10	0.01
v/s Ratio Perm	0.08		0.01	0.08		0.03	0.03			0.09		0.02
v/c Ratio	0.37	0.55	0.03	0.34	0.70	0.08	0.20	0.42		0.40	0.45	0.06
Uniform Delay, d1	16.8	25.3	20.0	17.4	26.7	17.3	24.3	28.2		18.3	24.9	15.7
Progression Factor	1.00	1.00	1.00	1.00	1.00	1.00	1.00	1.00		1.00	1.00	1.00
Incremental Delay, d2	0.5	1.4	0.0	0.4	4.9	0.1	0.4	0.5		0.7	0.4	0.0
Delay (s)	17.3	26.7	20.0	17.8	31.6	17.3	24.8	28.7		19.0	25.3	15.8
Level of Service	B	C	B	B	C	B	C	C		B	C	B
Approach Delay (s)		22.6			24.3			28.1			22.0	
Approach LOS		C			C			C			C	

Intersection Summary			
HCM Average Control Delay	23.8	HCM Level of Service	C
HCM Volume to Capacity ratio	0.56		
Actuated Cycle Length (s)	75.0	Sum of lost time (s)	28.0
Intersection Capacity Utilization	59.8%	ICU Level of Service	B
Analysis Period (min)	15		
c Critical Lane Group			

HCM Unsignalized Intersection Capacity Analysis
600: Road A & North Star Blvd.

LCPS (HS 7)
2015 Total Future

Movement	EBL	EBR	NBL	NBT	SBT	SBR
Lane Configurations						
Sign Control	Stop			Stop	Stop	
Volume (vph)	14	24	16	94	48	7
Peak Hour Factor	0.92	0.92	0.92	0.92	0.92	0.92
Hourly flow rate (vph)	15	26	17	102	52	8

Direction, Lane #	EB 1	EB 2	NB 1	NB 2	SB 1	SB 2
Volume Total (vph)	15	26	17	102	52	8
Volume Left (vph)	15	0	17	0	0	0
Volume Right (vph)	0	26	0	0	0	8
Hadj (s)	2.20	1.00	1.03	0.03	0.03	0.76
Departure Headway (s)	7.1	5.9	5.7	4.7	4.8	5.5
Degree Utilization, x	0.03	0.04	0.03	0.13	0.07	0.01
Capacity (veh/h)	485	585	617	747	735	640
Control Delay (s)	9.1	8.0	7.7	7.2	6.9	7.4
Approach Delay (s)	8.4		7.3		7.0	
Approach LOS	A		A		A	

Intersection Summary			
Delay	7.4		
HCM Level of Service	A		
Intersection Capacity Utilization	17.6%	ICU Level of Service	A
Analysis Period (min)	15		

Movement	EBL	EBR	NBL	NBT	SBT	SBR
Lane Configurations						
Sign Control	Stop			Stop	Stop	
Volume (vph)	98	195	107	13	21	51
Peak Hour Factor	0.92	0.92	0.92	0.92	0.92	0.92
Hourly flow rate (vph)	107	212	116	14	23	55

Direction, Lane #	EB 1	EB 2	NB 1	NB 2	SB 1	SB 2
Volume Total (vph)	107	212	116	14	23	55
Volume Left (vph)	107	0	116	0	0	0
Volume Right (vph)	0	212	0	0	0	55
Hadj (s)	0.53	-0.67	0.53	0.65	1.70	-0.67
Departure Headway (s)	5.6	4.4	5.9	6.0	7.1	4.8
Degree Utilization, x	0.17	0.26	0.19	0.02	0.05	0.07
Capacity (veh/h)	615	785	582	568	477	708
Control Delay (s)	8.5	7.7	9.1	8.0	9.3	6.9
Approach Delay (s)	8.0		9.0		7.6	
Approach LOS	A		A		A	

Intersection Summary			
Delay	8.2		
HCM Level of Service	A		
Intersection Capacity Utilization	24.7%	ICU Level of Service	A
Analysis Period (min)	15		

Movement	EBL	EBT	WBT	WBR	SBL	SBR
Lane Configurations						
Volume (veh/h)	80	130	190	124	169	100
Sign Control		Free	Free		Stop	
Grade		0%	0%		0%	
Peak Hour Factor	0.92	0.92	0.92	0.92	0.92	0.92
Hourly flow rate (vph)	87	141	207	135	184	109
Pedestrians						
Lane Width (ft)						
Walking Speed (ft/s)						
Percent Blockage						
Right turn flare (veh)						12
Median type		None	None			
Median storage veh)						
Upstream signal (ft)						
pX, platoon unblocked						
vC, conflicting volume	341				522	207
vC1, stage 1 conf vol						
vC2, stage 2 conf vol						
vCu, unblocked vol	341				522	207
tC, single (s)	4.1				6.5	6.3
tC, 2 stage (s)						
tF (s)	2.2				3.6	3.4
p0 queue free %	93				61	87
cM capacity (veh/h)	1207				470	812

Direction, Lane #	EB 1	WB 1	WB 2	SB 1
Volume Total	228	207	135	292
Volume Left	87	0	0	184
Volume Right	0	0	135	109
cSH	1207	1700	1700	748
Volume to Capacity	0.07	0.12	0.08	0.39
Queue Length 95th (ft)	6	0	0	47
Control Delay (s)	3.5	0.0	0.0	14.7
Lane LOS	A			B
Approach Delay (s)	3.5	0.0		14.7
Approach LOS				B

Intersection Summary			
Average Delay	5.9		
Intersection Capacity Utilization	40.6%	ICU Level of Service	A
Analysis Period (min)	15		

APPENDIX L-2

INTERSECTION CAPACITY ANALYSIS RESULTS– FUTURE CONDITIONS WITH PROPOSED DEVELOPMENT (2015) – HS PEAK ALTERNATIVE 2

HCM Signalized Intersection Capacity Analysis
100: Route 50 & Goshen Road

LCPS (HS 7)
2015 Total Future

Movement	EBL	EBT	EBR	WBL	WBT	WBR	NBL	NBT	NBR	SBL	SBT	SBR
Lane Configurations												
Volume (vph)	10	1006	50	61	438	12	48	9	64	5	1	0
Ideal Flow (vphpl)	1900	1900	1900	1900	1900	1900	1900	1900	1900	1900	1900	1900
Total Lost time (s)	7.0	7.0	7.0	7.0	7.0	7.0		7.0			7.0	
Lane Util. Factor	1.00	0.95	1.00	1.00	0.95	1.00		1.00			1.00	
Frt	1.00	1.00	0.85	1.00	1.00	0.85		0.93			1.00	
Flt Protected	0.95	1.00	1.00	0.95	1.00	1.00		0.98			0.96	
Satd. Flow (prot)	1770	3505	1538	1736	3343	1583		1683			1788	
Flt Permitted	0.95	1.00	1.00	0.95	1.00	1.00		0.87			0.74	
Satd. Flow (perm)	1770	3505	1538	1736	3343	1583		1491			1371	
Peak-hour factor, PHF	0.92	0.92	0.92	0.92	0.92	0.92	0.92	0.92	0.92	0.92	0.92	0.92
Adj. Flow (vph)	11	1093	54	66	476	13	52	10	70	5	1	0
RTOR Reduction (vph)	0	0	27	0	0	6	0	22	0	0	0	0
Lane Group Flow (vph)	11	1093	27	66	476	7	0	110	0	0	6	0
Heavy Vehicles (%)	2%	3%	5%	4%	8%	2%	4%	2%	2%	2%	2%	2%
Turn Type	Prot		Perm	Prot		Perm	Perm			Perm		
Protected Phases	5	2		1	6			8			4	
Permitted Phases			2			6	8			4		
Actuated Green, G (s)	1.1	37.4	37.4	6.7	43.0	43.0		11.3			11.3	
Effective Green, g (s)	1.1	37.4	37.4	6.7	43.0	43.0		11.3			11.3	
Actuated g/C Ratio	0.01	0.49	0.49	0.09	0.56	0.56		0.15			0.15	
Clearance Time (s)	7.0	7.0	7.0	7.0	7.0	7.0		7.0			7.0	
Vehicle Extension (s)	3.0	3.0	3.0	3.0	3.0	3.0		3.0			3.0	
Lane Grp Cap (vph)	25	1716	753	152	1882	891		221			203	
v/s Ratio Prot	0.01	c0.31		c0.04	c0.14							
v/s Ratio Perm			0.02			0.00		c0.07			0.00	
v/c Ratio	0.44	0.64	0.04	0.43	0.25	0.01		0.50			0.03	
Uniform Delay, d1	37.3	14.5	10.1	33.1	8.5	7.3		29.9			27.9	
Progression Factor	1.00	1.00	1.00	1.00	1.00	1.00		1.00			1.00	
Incremental Delay, d2	11.9	0.8	0.0	2.0	0.1	0.0		1.8			0.1	
Delay (s)	49.2	15.2	10.2	35.0	8.6	7.3		31.7			27.9	
Level of Service	D	B	B	D	A	A		C			C	
Approach Delay (s)		15.3			11.7			31.7			27.9	
Approach LOS		B			B			C			C	

Intersection Summary			
HCM Average Control Delay	15.5	HCM Level of Service	B
HCM Volume to Capacity ratio	0.67		
Actuated Cycle Length (s)	76.4	Sum of lost time (s)	28.0
Intersection Capacity Utilization	55.4%	ICU Level of Service	B
Analysis Period (min)	15		

c Critical Lane Group

HCM Unsignalized Intersection Capacity Analysis
200: Tall Cedars Pkwy & West Spine Road

LCPS (HS 7)
2015 Total Future

Movement	EBL	EBR	NBL	NBT	SBT	SBR
Lane Configurations						
Volume (veh/h)	46	84	53	886	390	38
Sign Control	Stop			Free	Free	
Grade	0%			0%	0%	
Peak Hour Factor	0.92	0.92	0.92	0.92	0.92	0.92
Hourly flow rate (vph)	50	91	58	963	424	41
Pedestrians						
Lane Width (ft)						
Walking Speed (ft/s)						
Percent Blockage						
Right turn flare (veh)						
Median type				None	None	
Median storage veh)						
Upstream signal (ft)						
pX, platoon unblocked						
vC, conflicting volume	1021	212	424			
vC1, stage 1 conf vol						
vC2, stage 2 conf vol						
vCu, unblocked vol	1021	212	424			
tC, single (s)	6.8	6.9	4.1			
tC, 2 stage (s)						
tF (s)	3.5	3.3	2.2			
p0 queue free %	77	88	95			
cM capacity (veh/h)	221	793	1132			

Direction, Lane #	EB 1	EB 2	NB 1	NB 2	SB 1	SB 2	SB 3
Volume Total	50	91	379	642	212	212	41
Volume Left	50	0	58	0	0	0	0
Volume Right	0	91	0	0	0	0	41
cSH	221	793	1132	1700	1700	1700	1700
Volume to Capacity	0.23	0.12	0.05	0.38	0.12	0.12	0.02
Queue Length 95th (ft)	21	10	4	0	0	0	0
Control Delay (s)	26.0	10.1	1.7	0.0	0.0	0.0	0.0
Lane LOS	D	B	A				
Approach Delay (s)	15.8		0.6		0.0		
Approach LOS	C						

Intersection Summary			
Average Delay	1.8		
Intersection Capacity Utilization	50.1%	ICU Level of Service	A
Analysis Period (min)	15		

HCM Signalized Intersection Capacity Analysis
300: Braddock Road & Gum Spring Road

LCPS (HS 7)
2015 Total Future

Movement	EBL	EBT	EBR	WBL	WBT	WBR	NBL	NBT	NBR	SBL	SBT	SBR
Lane Configurations												
Volume (vph)	167	641	49	92	460	263	38	291	119	311	191	86
Ideal Flow (vphpl)	1900	1900	1900	1900	1900	1900	1900	1900	1900	1900	1900	1900
Total Lost time (s)	7.0	7.0	7.0	7.0	7.0	7.0	7.0	7.0		7.0	7.0	7.0
Lane Util. Factor	1.00	1.00	1.00	1.00	1.00	1.00	1.00	0.95		1.00	0.95	1.00
Frt	1.00	1.00	0.85	1.00	1.00	0.85	1.00	0.96		1.00	1.00	0.85
Flt Protected	0.95	1.00	1.00	0.95	1.00	1.00	0.95	1.00		0.95	1.00	1.00
Satd. Flow (prot)	1770	1863	1583	1770	1863	1583	1770	3385		1770	3539	1583
Flt Permitted	0.25	1.00	1.00	0.10	1.00	1.00	0.62	1.00		0.23	1.00	1.00
Satd. Flow (perm)	460	1863	1583	183	1863	1583	1157	3385		427	3539	1583
Peak-hour factor, PHF	0.92	0.92	0.92	0.92	0.92	0.92	0.92	0.92	0.92	0.92	0.92	0.92
Adj. Flow (vph)	182	697	53	100	500	286	41	316	129	338	208	93
RTOR Reduction (vph)	0	0	31	0	0	55	0	41	0	0	0	61
Lane Group Flow (vph)	182	697	22	100	500	231	41	404	0	338	208	32
Turn Type	pm+pt		pm+ov	pm+pt		pm+ov	pm+pt			pm+pt		pm+ov
Protected Phases	7	4	5	3	8	1	5	2		1	6	7
Permitted Phases	4		4	8		8	2			6		6
Actuated Green, G (s)	46.7	41.7	44.9	44.7	40.7	57.7	21.5	18.3		42.3	32.1	37.1
Effective Green, g (s)	46.7	41.7	44.9	44.7	40.7	57.7	21.5	18.3		42.3	32.1	37.1
Actuated g/C Ratio	0.43	0.38	0.41	0.41	0.37	0.53	0.20	0.17		0.39	0.29	0.34
Clearance Time (s)	7.0	7.0	7.0	7.0	7.0	7.0	7.0	7.0		7.0	7.0	7.0
Vehicle Extension (s)	3.0	3.0	3.0	3.0	3.0	3.0	3.0	3.0		3.0	3.0	3.0
Lane Grp Cap (vph)	257	713	754	133	696	940	246	568		375	1042	640
v/s Ratio Prot	c0.03	c0.37	0.00	0.03	0.27	0.04	0.00	0.12		c0.14	0.06	0.00
v/s Ratio Perm	0.27		0.01	0.28		0.11	0.03			c0.21		0.02
v/c Ratio	0.71	0.98	0.03	0.75	0.72	0.25	0.17	0.71		0.90	0.20	0.05
Uniform Delay, d1	26.8	33.2	19.1	26.1	29.2	13.9	36.0	42.9		26.6	28.8	24.1
Progression Factor	1.00	1.00	1.00	1.00	1.00	1.00	1.00	1.00		1.00	1.00	1.00
Incremental Delay, d2	8.6	27.9	0.0	21.0	3.6	0.1	0.3	4.2		23.9	0.1	0.0
Delay (s)	35.4	61.0	19.1	47.1	32.8	14.0	36.3	47.1		50.5	28.9	24.2
Level of Service	D	E	B	D	C	B	D	D		D	C	C
Approach Delay (s)		53.7			28.4			46.1			39.6	
Approach LOS		D			C			D			D	

Intersection Summary			
HCM Average Control Delay	41.8	HCM Level of Service	D
HCM Volume to Capacity ratio	0.84		
Actuated Cycle Length (s)	109.0	Sum of lost time (s)	14.0
Intersection Capacity Utilization	91.2%	ICU Level of Service	F
Analysis Period (min)	15		
c Critical Lane Group			

HCM Unsignalized Intersection Capacity Analysis
600: Road A & North Star Blvd.

LCPS (HS 7)
2015 Total Future

Movement	EBL	EBR	NBL	NBT	SBT	SBR
Lane Configurations						
Sign Control	Stop			Stop	Stop	
Volume (vph)	4	19	40	29	55	9
Peak Hour Factor	0.92	0.92	0.92	0.92	0.92	0.92
Hourly flow rate (vph)	4	21	43	32	60	10

Direction, Lane #	EB 1	EB 2	NB 1	NB 2	SB 1	SB 2
Volume Total (vph)	4	21	43	32	60	10
Volume Left (vph)	4	0	43	0	0	0
Volume Right (vph)	0	21	0	0	0	10
Hadj (s)	1.35	-0.16	1.49	0.03	0.03	0.63
Departure Headway (s)	6.2	4.7	6.1	4.6	4.7	5.3
Degree Utilization, x	0.01	0.03	0.07	0.04	0.08	0.01
Capacity (veh/h)	556	735	579	759	764	671
Control Delay (s)	8.1	6.6	8.4	6.6	6.9	7.1
Approach Delay (s)	6.9		7.7		6.9	
Approach LOS	A		A		A	

Intersection Summary			
Delay	7.2		
HCM Level of Service	A		
Intersection Capacity Utilization	18.9%	ICU Level of Service	A
Analysis Period (min)	15		

Movement	EBL	EBR	NBL	NBT	SBT	SBR
Lane Configurations						
Sign Control	Stop			Stop	Stop	
Volume (vph)	23	167	357	52	31	49
Peak Hour Factor	0.92	0.92	0.92	0.92	0.92	0.92
Hourly flow rate (vph)	25	182	388	57	34	53

Direction, Lane #	EB 1	EB 2	NB 1	NB 2	SB 1	SB 2
Volume Total (vph)	25	182	388	57	34	53
Volume Left (vph)	25	0	388	0	0	0
Volume Right (vph)	0	182	0	0	0	53
Hadj (s)	0.53	-0.67	0.53	0.75	0.32	-0.67
Departure Headway (s)	6.4	5.2	5.7	5.9	5.9	4.9
Degree Utilization, x	0.04	0.26	0.62	0.09	0.06	0.07
Capacity (veh/h)	522	643	610	587	574	688
Control Delay (s)	8.5	8.9	16.2	8.3	8.1	7.1
Approach Delay (s)	8.8		15.2		7.5	
Approach LOS	A		C		A	

Intersection Summary			
Delay	12.5		
HCM Level of Service	B		
Intersection Capacity Utilization	36.4%	ICU Level of Service	A
Analysis Period (min)	15		

Movement	EBL	EBT	WBT	WBR	SBL	SBR
Lane Configurations						
Volume (veh/h)	72	290	183	368	224	58
Sign Control		Free	Free		Stop	
Grade		0%	0%		0%	
Peak Hour Factor	0.92	0.92	0.92	0.92	0.92	0.92
Hourly flow rate (vph)	78	315	199	400	243	63
Pedestrians						
Lane Width (ft)						
Walking Speed (ft/s)						
Percent Blockage						
Right turn flare (veh)						12
Median type		None	None			
Median storage veh)						
Upstream signal (ft)						
pX, platoon unblocked						
vC, conflicting volume	599				671	199
vC1, stage 1 conf vol						
vC2, stage 2 conf vol						
vCu, unblocked vol	599				671	199
tC, single (s)	4.1				6.4	6.2
tC, 2 stage (s)						
tF (s)	2.2				3.5	3.3
p0 queue free %	92				37	93
cM capacity (veh/h)	968				388	842

Direction, Lane #	EB 1	WB 1	WB 2	SB 1
Volume Total	393	199	400	307
Volume Left	78	0	0	243
Volume Right	0	0	400	63
cSH	968	1700	1700	488
Volume to Capacity	0.08	0.12	0.24	0.63
Queue Length 95th (ft)	7	0	0	107
Control Delay (s)	2.5	0.0	0.0	24.8
Lane LOS	A			C
Approach Delay (s)	2.5	0.0		24.8
Approach LOS				C

Intersection Summary			
Average Delay	6.6		
Intersection Capacity Utilization	51.3%	ICU Level of Service	A
Analysis Period (min)	15		

HCM Signalized Intersection Capacity Analysis
100: Route 50 & Goshen Road

LCPS (HS 7)
2015 Total Future

Movement	EBL	EBT	EBR	WBL	WBT	WBR	NBL	NBT	NBR	SBL	SBT	SBR
Lane Configurations												
Volume (vph)	1	402	43	51	1293	5	37	1	63	1	8	5
Ideal Flow (vphpl)	1900	1900	1900	1900	1900	1900	1900	1900	1900	1900	1900	1900
Total Lost time (s)	7.0	7.0	7.0	7.0	7.0	7.0		7.0			7.0	
Lane Util. Factor	1.00	0.95	1.00	1.00	0.95	1.00		1.00			1.00	
Frt	1.00	1.00	0.85	1.00	1.00	0.85		0.92			0.95	
Flt Protected	0.95	1.00	1.00	0.95	1.00	1.00		0.98			1.00	
Satd. Flow (prot)	1770	3505	1553	1770	3343	1583		1616			1773	
Flt Permitted	0.95	1.00	1.00	0.95	1.00	1.00		0.87			0.97	
Satd. Flow (perm)	1770	3505	1553	1770	3343	1583		1437			1731	
Peak-hour factor, PHF	0.92	0.92	0.92	0.92	0.92	0.92	0.92	0.92	0.92	0.92	0.92	0.92
Adj. Flow (vph)	1	437	47	55	1405	5	40	1	68	1	9	5
RTOR Reduction (vph)	0	0	25	0	0	1	0	32	0	0	4	0
Lane Group Flow (vph)	1	437	22	55	1405	4	0	77	0	0	11	0
Heavy Vehicles (%)	2%	3%	4%	2%	8%	2%	7%	2%	5%	2%	2%	2%
Turn Type	Prot		Perm	Prot		Perm	Perm			Perm		
Protected Phases	5	2		1	6			8			4	
Permitted Phases			2			6	8			4		
Actuated Green, G (s)	0.7	32.3	32.3	4.9	36.5	36.5		9.9			9.9	
Effective Green, g (s)	0.7	32.3	32.3	4.9	36.5	36.5		9.9			9.9	
Actuated g/C Ratio	0.01	0.47	0.47	0.07	0.54	0.54		0.15			0.15	
Clearance Time (s)	7.0	7.0	7.0	7.0	7.0	7.0		7.0			7.0	
Vehicle Extension (s)	3.0	3.0	3.0	3.0	3.0	3.0		3.0			3.0	
Lane Grp Cap (vph)	18	1662	737	127	1792	848		209			252	
v/s Ratio Prot	0.00	0.12		c0.03	c0.42							
v/s Ratio Perm			0.01			0.00		c0.05			0.01	
v/c Ratio	0.06	0.26	0.03	0.43	0.78	0.00		0.37			0.04	
Uniform Delay, d1	33.4	10.8	9.5	30.3	12.6	7.4		26.3			25.0	
Progression Factor	1.00	1.00	1.00	1.00	1.00	1.00		1.00			1.00	
Incremental Delay, d2	1.3	0.1	0.0	2.4	2.3	0.0		1.1			0.1	
Delay (s)	34.7	10.8	9.6	32.6	15.0	7.4		27.4			25.1	
Level of Service	C	B	A	C	B	A		C			C	
Approach Delay (s)		10.8			15.6			27.4			25.1	
Approach LOS		B			B			C			C	

Intersection Summary			
HCM Average Control Delay	15.2	HCM Level of Service	B
HCM Volume to Capacity ratio	0.73		
Actuated Cycle Length (s)	68.1	Sum of lost time (s)	21.0
Intersection Capacity Utilization	66.7%	ICU Level of Service	C
Analysis Period (min)	15		

c Critical Lane Group

HCM Unsignalized Intersection Capacity Analysis
200: Tall Cedars Pkwy & West Spine Road

LCPS (HS 7)
2015 Total Future

Movement	EBL	EBR	NBL	NBT	SBT	SBR
Lane Configurations						
Volume (veh/h)	31	78	67	437	780	64
Sign Control	Stop			Free	Free	
Grade	0%			0%	0%	
Peak Hour Factor	0.92	0.92	0.92	0.92	0.92	0.92
Hourly flow rate (vph)	34	85	73	475	848	70
Pedestrians						
Lane Width (ft)						
Walking Speed (ft/s)						
Percent Blockage						
Right turn flare (veh)						
Median type				None	None	
Median storage veh)						
Upstream signal (ft)						
pX, platoon unblocked						
vC, conflicting volume	1231	424	848			
vC1, stage 1 conf vol						
vC2, stage 2 conf vol						
vCu, unblocked vol	1231	424	848			
tC, single (s)	6.8	6.9	4.1			
tC, 2 stage (s)						
tF (s)	3.5	3.3	2.2			
p0 queue free %	78	85	91			
cM capacity (veh/h)	154	579	785			

Direction, Lane #	EB 1	EB 2	NB 1	NB 2	SB 1	SB 2	SB 3
Volume Total	34	85	231	317	424	424	70
Volume Left	34	0	73	0	0	0	0
Volume Right	0	85	0	0	0	0	70
cSH	154	579	785	1700	1700	1700	1700
Volume to Capacity	0.22	0.15	0.09	0.19	0.25	0.25	0.04
Queue Length 95th (ft)	20	13	8	0	0	0	0
Control Delay (s)	34.8	12.3	3.9	0.0	0.0	0.0	0.0
Lane LOS	D	B	A				
Approach Delay (s)	18.7		1.6		0.0		
Approach LOS	C						

Intersection Summary			
Average Delay	2.0		
Intersection Capacity Utilization	48.9%	ICU Level of Service	A
Analysis Period (min)	15		

HCM Signalized Intersection Capacity Analysis
300: Braddock Road & Gum Spring Road

LCPS (HS 7)
2015 Total Future

Movement	EBL	EBT	EBR	WBL	WBT	WBR	NBL	NBT	NBR	SBL	SBT	SBR
Lane Configurations												
Volume (vph)	136	329	54	144	325	150	42	183	65	133	338	117
Ideal Flow (vphpl)	1900	1900	1900	1900	1900	1900	1900	1900	1900	1900	1900	1900
Total Lost time (s)	7.0	7.0	7.0	7.0	7.0	7.0	7.0	7.0		7.0	7.0	7.0
Lane Util. Factor	1.00	1.00	1.00	1.00	1.00	1.00	1.00	0.95		1.00	0.95	1.00
Frt	1.00	1.00	0.85	1.00	1.00	0.85	1.00	0.96		1.00	1.00	0.85
Flt Protected	0.95	1.00	1.00	0.95	1.00	1.00	0.95	1.00		0.95	1.00	1.00
Satd. Flow (prot)	1770	1863	1583	1770	1863	1583	1770	3400		1770	3539	1583
Flt Permitted	0.34	1.00	1.00	0.35	1.00	1.00	0.53	1.00		0.43	1.00	1.00
Satd. Flow (perm)	639	1863	1583	653	1863	1583	993	3400		793	3539	1583
Peak-hour factor, PHF	0.92	0.92	0.92	0.92	0.92	0.92	0.92	0.92	0.92	0.92	0.92	0.92
Adj. Flow (vph)	148	358	59	157	353	163	46	199	71	145	367	127
RTOR Reduction (vph)	0	0	41	0	0	105	0	34	0	0	0	83
Lane Group Flow (vph)	148	358	18	157	353	58	46	236	0	145	367	44
Turn Type	pm+pt		pm+ov	pm+pt		pm+ov	pm+pt			pm+pt		pm+ov
Protected Phases	7	4	5	3	8	1	5	2		1	6	7
Permitted Phases	4		4	8		8	2			6		6
Actuated Green, G (s)	29.8	20.1	23.2	29.2	19.8	27.7	15.9	12.8		25.5	17.6	27.3
Effective Green, g (s)	29.8	20.1	23.2	29.2	19.8	27.7	15.9	12.8		25.5	17.6	27.3
Actuated g/C Ratio	0.38	0.26	0.30	0.37	0.25	0.35	0.20	0.16		0.33	0.23	0.35
Clearance Time (s)	7.0	7.0	7.0	7.0	7.0	7.0	7.0	7.0		7.0	7.0	7.0
Vehicle Extension (s)	3.0	3.0	3.0	3.0	3.0	3.0	3.0	3.0		3.0	3.0	3.0
Lane Grp Cap (vph)	384	479	611	378	472	702	233	557		357	797	694
v/s Ratio Prot	0.05	c0.19	0.00	c0.05	0.19	0.01	0.01	0.07		c0.04	c0.10	0.01
v/s Ratio Perm	0.10		0.01	0.11		0.03	0.03			0.09		0.02
v/c Ratio	0.39	0.75	0.03	0.42	0.75	0.08	0.20	0.42		0.41	0.46	0.06
Uniform Delay, d1	16.8	26.7	19.5	17.2	26.9	16.8	25.5	29.4		19.5	26.2	16.9
Progression Factor	1.00	1.00	1.00	1.00	1.00	1.00	1.00	1.00		1.00	1.00	1.00
Incremental Delay, d2	0.6	6.3	0.0	0.7	6.4	0.1	0.4	0.5		0.8	0.4	0.0
Delay (s)	17.4	33.0	19.5	18.0	33.3	16.8	25.9	29.9		20.3	26.6	17.0
Level of Service	B	C	B	B	C	B	C	C		C	C	B
Approach Delay (s)		27.5			25.7			29.3			23.3	
Approach LOS		C			C			C			C	

Intersection Summary			
HCM Average Control Delay	26.0	HCM Level of Service	C
HCM Volume to Capacity ratio	0.53		
Actuated Cycle Length (s)	78.2	Sum of lost time (s)	21.0
Intersection Capacity Utilization	63.1%	ICU Level of Service	B
Analysis Period (min)	15		
c Critical Lane Group			

HCM Unsignalized Intersection Capacity Analysis
600: Road A & North Star Blvd.

LCPS (HS 7)
2015 Total Future

Movement	EBL	EBR	NBL	NBT	SBT	SBR
Lane Configurations						
Sign Control	Stop			Stop	Stop	
Volume (vph)	6	33	21	37	19	3
Peak Hour Factor	0.92	0.92	0.92	0.92	0.92	0.92
Hourly flow rate (vph)	7	36	23	40	21	3

Direction, Lane #	EB 1	EB 2	NB 1	NB 2	SB 1	SB 2
Volume Total (vph)	7	36	23	40	21	3
Volume Left (vph)	7	0	23	0	0	0
Volume Right (vph)	0	36	0	0	0	3
Hadj (s)	2.20	1.00	1.13	0.03	0.03	1.00
Departure Headway (s)	6.9	5.7	5.8	4.7	4.7	5.7
Degree Utilization, x	0.01	0.06	0.04	0.05	0.03	0.01
Capacity (veh/h)	504	614	610	751	753	619
Control Delay (s)	8.8	7.9	7.8	6.7	6.6	7.5
Approach Delay (s)	8.0		7.1		6.8	
Approach LOS	A		A		A	

Intersection Summary			
Delay	7.3		
HCM Level of Service	A		
Intersection Capacity Utilization	17.8%	ICU Level of Service	A
Analysis Period (min)	15		

Movement	EBL	EBR	NBL	NBT	SBT	SBR
Lane Configurations						
Sign Control	Stop			Stop	Stop	
Volume (vph)	41	273	146	17	30	23
Peak Hour Factor	0.92	0.92	0.92	0.92	0.92	0.92
Hourly flow rate (vph)	45	297	159	18	33	25

Direction, Lane #	EB 1	EB 2	NB 1	NB 2	SB 1	SB 2
Volume Total (vph)	45	297	159	18	33	25
Volume Left (vph)	45	0	159	0	0	0
Volume Right (vph)	0	297	0	0	0	25
Hadj (s)	0.53	-0.67	0.53	0.80	1.70	-0.67
Departure Headway (s)	5.7	4.5	5.9	6.2	7.3	4.9
Degree Utilization, x	0.07	0.37	0.26	0.03	0.07	0.03
Capacity (veh/h)	601	768	579	549	466	683
Control Delay (s)	7.9	9.0	9.8	8.2	9.6	6.9
Approach Delay (s)	8.8		9.7		8.4	
Approach LOS	A		A		A	

Intersection Summary			
Delay	9.0		
HCM Level of Service	A		
Intersection Capacity Utilization	26.9%	ICU Level of Service	A
Analysis Period (min)	15		

Movement	EBL	EBT	WBT	WBR	SBL	SBR
Lane Configurations						
Volume (veh/h)	74	130	190	173	266	90
Sign Control		Free	Free		Stop	
Grade		0%	0%		0%	
Peak Hour Factor	0.92	0.92	0.92	0.92	0.92	0.92
Hourly flow rate (vph)	80	141	207	188	289	98
Pedestrians						
Lane Width (ft)						
Walking Speed (ft/s)						
Percent Blockage						
Right turn flare (veh)						12
Median type		None	None			
Median storage veh)						
Upstream signal (ft)						
pX, platoon unblocked						
vC, conflicting volume	395				509	207
vC1, stage 1 conf vol						
vC2, stage 2 conf vol						
vCu, unblocked vol	395				509	207
tC, single (s)	4.1				6.5	6.3
tC, 2 stage (s)						
tF (s)	2.2				3.6	3.4
p0 queue free %	93				40	88
cM capacity (veh/h)	1159				478	812

Direction, Lane #	EB 1	WB 1	WB 2	SB 1
Volume Total	222	207	188	387
Volume Left	80	0	0	289
Volume Right	0	0	188	98
cSH	1159	1700	1700	640
Volume to Capacity	0.07	0.12	0.11	0.60
Queue Length 95th (ft)	6	0	0	102
Control Delay (s)	3.4	0.0	0.0	20.0
Lane LOS	A			C
Approach Delay (s)	3.4	0.0		20.0
Approach LOS				C

Intersection Summary			
Average Delay	8.5		
Intersection Capacity Utilization	45.7%	ICU Level of Service	A
Analysis Period (min)	15		

APPENDIX L-3

INTERSECTION CAPACITY ANALYSIS RESULTS– FUTURE CONDITIONS WITH PROPOSED DEVELOPMENT (2015) – ES PEAK, ALTERNATIVE 1

HCM Signalized Intersection Capacity Analysis
100: Route 50 & Goshen Road

LCPS (HS 7)
2015 Total Future

Movement	EBL	EBT	EBR	WBL	WBT	WBR	NBL	NBT	NBR	SBL	SBT	SBR
Lane Configurations												
Volume (vph)	16	1277	23	51	388	14	35	16	47	6	1	0
Ideal Flow (vphpl)	1900	1900	1900	1900	1900	1900	1900	1900	1900	1900	1900	1900
Total Lost time (s)	7.0	7.0	7.0	7.0	7.0	7.0		7.0			7.0	
Lane Util. Factor	1.00	0.95	1.00	1.00	0.95	1.00		1.00			1.00	
Frt	1.00	1.00	0.85	1.00	1.00	0.85		0.94			1.00	
Flt Protected	0.95	1.00	1.00	0.95	1.00	1.00		0.98			0.96	
Satd. Flow (prot)	1770	3505	1583	1752	3343	1583		1711			1785	
Flt Permitted	0.95	1.00	1.00	0.95	1.00	1.00		0.88			0.79	
Satd. Flow (perm)	1770	3505	1583	1752	3343	1583		1530			1478	
Peak-hour factor, PHF	0.92	0.92	0.92	0.92	0.92	0.92	0.92	0.92	0.92	0.92	0.92	0.92
Adj. Flow (vph)	17	1388	25	55	422	15	38	17	51	7	1	0
RTOR Reduction (vph)	0	0	9	0	0	6	0	18	0	0	0	0
Lane Group Flow (vph)	17	1388	16	55	422	9	0	88	0	0	8	0
Heavy Vehicles (%)	2%	3%	2%	3%	8%	2%	2%	2%	2%	2%	2%	2%
Turn Type	Prot		Perm	Prot		Perm	Perm			Perm		
Protected Phases	5	2		1	6			8			4	
Permitted Phases			2			6	8			4		
Actuated Green, G (s)	2.4	46.0	46.0	6.6	50.2	50.2		10.9			10.9	
Effective Green, g (s)	2.4	46.0	46.0	6.6	50.2	50.2		10.9			10.9	
Actuated g/C Ratio	0.03	0.54	0.54	0.08	0.59	0.59		0.13			0.13	
Clearance Time (s)	7.0	7.0	7.0	7.0	7.0	7.0		7.0			7.0	
Vehicle Extension (s)	3.0	3.0	3.0	3.0	3.0	3.0		3.0			3.0	
Lane Grp Cap (vph)	50	1908	862	137	1986	940		197			191	
v/s Ratio Prot	0.01	c0.40		c0.03	c0.13							
v/s Ratio Perm			0.01			0.01		c0.06			0.01	
v/c Ratio	0.34	0.73	0.02	0.40	0.21	0.01		0.45			0.04	
Uniform Delay, d1	40.3	14.5	8.9	37.1	8.0	7.0		34.0			32.2	
Progression Factor	1.00	1.00	1.00	1.00	1.00	1.00		1.00			1.00	
Incremental Delay, d2	4.0	1.4	0.0	1.9	0.1	0.0		1.6			0.1	
Delay (s)	44.3	15.9	8.9	39.0	8.0	7.0		35.6			32.3	
Level of Service	D	B	A	D	A	A		D			C	
Approach Delay (s)		16.1			11.5			35.6			32.3	
Approach LOS		B			B			D			C	

Intersection Summary			
HCM Average Control Delay	16.1	HCM Level of Service	B
HCM Volume to Capacity ratio	0.73		
Actuated Cycle Length (s)	84.5	Sum of lost time (s)	28.0
Intersection Capacity Utilization	59.4%	ICU Level of Service	B
Analysis Period (min)	15		

c Critical Lane Group

HCM Unsignalized Intersection Capacity Analysis
200: Tall Cedars Pkwy & West Spine Road

LCPS (HS 7)
2015 Total Future

Movement	EBL	EBR	NBL	NBT	SBT	SBR
Lane Configurations						
Volume (veh/h)	59	94	87	823	312	51
Sign Control	Stop			Free	Free	
Grade	0%			0%	0%	
Peak Hour Factor	0.92	0.92	0.92	0.92	0.92	0.92
Hourly flow rate (vph)	64	102	95	895	339	55
Pedestrians						
Lane Width (ft)						
Walking Speed (ft/s)						
Percent Blockage						
Right turn flare (veh)						
Median type				None	None	
Median storage veh)						
Upstream signal (ft)						
pX, platoon unblocked						
vC, conflicting volume	976	170	339			
vC1, stage 1 conf vol						
vC2, stage 2 conf vol						
vCu, unblocked vol	976	170	339			
tC, single (s)	6.8	6.9	4.1			
tC, 2 stage (s)						
tF (s)	3.5	3.3	2.2			
p0 queue free %	72	88	92			
cM capacity (veh/h)	229	845	1217			

Direction, Lane #	EB 1	EB 2	NB 1	NB 2	SB 1	SB 2	SB 3
Volume Total	64	102	393	596	170	170	55
Volume Left	64	0	95	0	0	0	0
Volume Right	0	102	0	0	0	0	55
cSH	229	845	1217	1700	1700	1700	1700
Volume to Capacity	0.28	0.12	0.08	0.35	0.10	0.10	0.03
Queue Length 95th (ft)	28	10	6	0	0	0	0
Control Delay (s)	26.7	9.8	2.6	0.0	0.0	0.0	0.0
Lane LOS	D	A	A				
Approach Delay (s)	16.3		1.0		0.0		
Approach LOS	C						

Intersection Summary			
Average Delay	2.4		
Intersection Capacity Utilization	47.2%	ICU Level of Service	A
Analysis Period (min)	15		

HCM Signalized Intersection Capacity Analysis
300: Braddock Road & Gum Spring Road

LCPS (HS 7)
2015 Total Future

Movement	EBL	EBT	EBR	WBL	WBT	WBR	NBL	NBT	NBR	SBL	SBT	SBR
Lane Configurations												
Volume (vph)	160	398	37	72	163	154	46	327	152	253	170	80
Ideal Flow (vphpl)	1900	1900	1900	1900	1900	1900	1900	1900	1900	1900	1900	1900
Total Lost time (s)	7.0	7.0	7.0	7.0	7.0	7.0	7.0	7.0		7.0	7.0	7.0
Lane Util. Factor	1.00	1.00	1.00	1.00	1.00	1.00	1.00	0.95		1.00	0.95	1.00
Frt	1.00	1.00	0.85	1.00	1.00	0.85	1.00	0.95		1.00	1.00	0.85
Flt Protected	0.95	1.00	1.00	0.95	1.00	1.00	0.95	1.00		0.95	1.00	1.00
Satd. Flow (prot)	1770	1863	1583	1770	1863	1583	1770	3371		1770	3539	1583
Flt Permitted	0.59	1.00	1.00	0.29	1.00	1.00	0.64	1.00		0.23	1.00	1.00
Satd. Flow (perm)	1096	1863	1583	535	1863	1583	1183	3371		421	3539	1583
Peak-hour factor, PHF	0.92	0.92	0.92	0.92	0.92	0.92	0.92	0.92	0.92	0.92	0.92	0.92
Adj. Flow (vph)	174	433	40	78	177	167	50	355	165	275	185	87
RTOR Reduction (vph)	0	0	27	0	0	81	0	48	0	0	0	53
Lane Group Flow (vph)	174	433	13	78	177	86	50	472	0	275	185	34
Turn Type	pm+pt		pm+ov	pm+pt		pm+ov	pm+pt			pm+pt		pm+ov
Protected Phases	7	4	5	3	8	1	5	2		1	6	7
Permitted Phases	4		4	8		8	2			6		6
Actuated Green, G (s)	32.9	27.7	30.7	28.5	25.5	40.0	21.8	18.8		40.3	30.3	35.5
Effective Green, g (s)	32.9	27.7	30.7	28.5	25.5	40.0	21.8	18.8		40.3	30.3	35.5
Actuated g/C Ratio	0.36	0.30	0.33	0.31	0.28	0.43	0.24	0.20		0.44	0.33	0.39
Clearance Time (s)	7.0	7.0	7.0	7.0	7.0	7.0	7.0	7.0		7.0	7.0	7.0
Vehicle Extension (s)	3.0	3.0	3.0	3.0	3.0	3.0	3.0	3.0		3.0	3.0	3.0
Lane Grp Cap (vph)	430	561	649	206	516	809	299	689		397	1166	731
v/s Ratio Prot	c0.02	c0.23	0.00	0.01	0.10	0.02	0.01	0.14		c0.11	0.05	0.00
v/s Ratio Perm	0.12		0.01	0.10		0.04	0.03			c0.19		0.02
v/c Ratio	0.40	0.77	0.02	0.38	0.34	0.11	0.17	0.69		0.69	0.16	0.05
Uniform Delay, d1	21.5	29.3	20.6	23.7	26.6	15.4	27.6	33.9		18.6	21.8	17.7
Progression Factor	1.00	1.00	1.00	1.00	1.00	1.00	1.00	1.00		1.00	1.00	1.00
Incremental Delay, d2	0.6	6.5	0.0	1.2	0.4	0.1	0.3	2.8		5.2	0.1	0.0
Delay (s)	22.1	35.8	20.6	24.8	27.0	15.5	27.8	36.7		23.7	21.9	17.7
Level of Service	C	D	C	C	C	B	C	D		C	C	B
Approach Delay (s)		31.2			22.0			35.9			22.2	
Approach LOS		C			C			D			C	

Intersection Summary			
HCM Average Control Delay	28.4	HCM Level of Service	C
HCM Volume to Capacity ratio	0.63		
Actuated Cycle Length (s)	92.0	Sum of lost time (s)	14.0
Intersection Capacity Utilization	76.2%	ICU Level of Service	D
Analysis Period (min)	15		
c Critical Lane Group			

HCM Unsignalized Intersection Capacity Analysis
600: Road A & North Star Blvd.

LCPS (HS 7)
2015 Total Future

Movement	EBL	EBR	NBL	NBT	SBT	SBR
Lane Configurations						
Sign Control	Stop			Stop	Stop	
Volume (vph)	2	40	37	22	39	5
Peak Hour Factor	0.92	0.92	0.92	0.92	0.92	0.92
Hourly flow rate (vph)	2	43	40	24	42	5

Direction, Lane #	EB 1	EB 2	NB 1	NB 2	SB 1	SB 2
Volume Total (vph)	2	43	40	24	42	5
Volume Left (vph)	2	0	40	0	0	0
Volume Right (vph)	0	43	0	0	0	5
Hadj (s)	2.20	-0.39	1.91	0.03	0.03	1.00
Departure Headway (s)	7.0	4.4	6.6	4.7	4.7	5.7
Degree Utilization, x	0.00	0.05	0.07	0.03	0.06	0.01
Capacity (veh/h)	496	790	538	751	755	620
Control Delay (s)	8.8	6.4	8.9	6.6	6.8	7.5
Approach Delay (s)	6.6		8.0		6.9	
Approach LOS	A		A		A	

Intersection Summary			
Delay	7.3		
HCM Level of Service	A		
Intersection Capacity Utilization	18.7%	ICU Level of Service	A
Analysis Period (min)	15		

Movement	EBL	EBR	NBL	NBT	SBT	SBR
Lane Configurations						
Sign Control	Stop			Stop	Stop	
Volume (vph)	46	156	218	13	9	70
Peak Hour Factor	0.92	0.92	0.92	0.92	0.92	0.92
Hourly flow rate (vph)	50	170	237	14	10	76

Direction, Lane #	EB 1	EB 2	NB 1	NB 2	SB 1	SB 2
Volume Total (vph)	50	170	237	14	10	76
Volume Left (vph)	50	0	237	0	0	0
Volume Right (vph)	0	170	0	0	0	76
Hadj (s)	0.53	-0.67	0.53	1.70	1.70	-0.67
Departure Headway (s)	5.9	4.7	5.7	6.9	7.1	4.7
Degree Utilization, x	0.08	0.22	0.37	0.03	0.02	0.10
Capacity (veh/h)	573	718	614	505	485	726
Control Delay (s)	8.3	7.9	10.9	8.8	9.0	7.0
Approach Delay (s)	8.0		10.7		7.2	
Approach LOS	A		B		A	

Intersection Summary			
Delay	9.1		
HCM Level of Service	A		
Intersection Capacity Utilization	28.7%	ICU Level of Service	A
Analysis Period (min)	15		

Movement	EBL	EBT	WBT	WBR	SBL	SBR
Lane Configurations						
Volume (veh/h)	207	219	92	70	83	169
Sign Control		Free	Free		Stop	
Grade		0%	0%		0%	
Peak Hour Factor	0.92	0.92	0.92	0.92	0.92	0.92
Hourly flow rate (vph)	225	238	100	76	90	184
Pedestrians						
Lane Width (ft)						
Walking Speed (ft/s)						
Percent Blockage						
Right turn flare (veh)						12
Median type		None	None			
Median storage veh)						
Upstream signal (ft)						
pX, platoon unblocked						
vC, conflicting volume	176				788	100
vC1, stage 1 conf vol						
vC2, stage 2 conf vol						
vCu, unblocked vol	176				788	100
tC, single (s)	4.2				6.4	6.2
tC, 2 stage (s)						
tF (s)	2.3				3.5	3.3
p0 queue free %	83				70	81
cM capacity (veh/h)	1342				300	950

Direction, Lane #	EB 1	WB 1	WB 2	SB 1
Volume Total	463	100	76	274
Volume Left	225	0	0	90
Volume Right	0	0	76	184
cSH	1342	1700	1700	910
Volume to Capacity	0.17	0.06	0.04	0.30
Queue Length 95th (ft)	15	0	0	32
Control Delay (s)	4.8	0.0	0.0	13.8
Lane LOS	A			B
Approach Delay (s)	4.8	0.0		13.8
Approach LOS				B

Intersection Summary			
Average Delay	6.6		
Intersection Capacity Utilization	40.9%	ICU Level of Service	A
Analysis Period (min)	15		

HCM Signalized Intersection Capacity Analysis
100: Route 50 & Goshen Road

LCPS (HS 7)
2015 Total Future

Movement	EBL	EBT	EBR	WBL	WBT	WBR	NBL	NBT	NBR	SBL	SBT	SBR
Lane Configurations												
Volume (vph)	5	435	32	40	850	2	23	1	43	1	3	2
Ideal Flow (vphpl)	1900	1900	1900	1900	1900	1900	1900	1900	1900	1900	1900	1900
Total Lost time (s)	7.0	7.0	7.0	7.0	7.0	7.0		7.0			7.0	
Lane Util. Factor	1.00	0.95	1.00	1.00	0.95	1.00		1.00			1.00	
Frt	1.00	1.00	0.85	1.00	1.00	0.85		0.91			0.95	
Flt Protected	0.95	1.00	1.00	0.95	1.00	1.00		0.98			0.99	
Satd. Flow (prot)	1770	3505	1583	1770	3343	1583		1651			1764	
Flt Permitted	0.95	1.00	1.00	0.95	1.00	1.00		0.88			0.92	
Satd. Flow (perm)	1770	3505	1583	1770	3343	1583		1484			1645	
Peak-hour factor, PHF	0.92	0.92	0.92	0.92	0.92	0.92	0.92	0.92	0.92	0.92	0.92	0.92
Adj. Flow (vph)	5	473	35	43	924	2	25	1	47	1	3	2
RTOR Reduction (vph)	0	0	22	0	0	1	0	35	0	0	2	0
Lane Group Flow (vph)	5	473	13	43	924	1	0	38	0	0	4	0
Heavy Vehicles (%)	2%	3%	2%	2%	8%	2%	2%	2%	4%	2%	2%	2%
Turn Type	Prot		Perm	Prot		Perm	Perm			Perm		
Protected Phases	5	2		1	6			8			4	
Permitted Phases			2			6	8			4		
Actuated Green, G (s)	0.8	18.8	18.8	2.5	20.5	20.5		7.1			7.1	
Effective Green, g (s)	0.8	18.8	18.8	2.5	20.5	20.5		7.1			7.1	
Actuated g/C Ratio	0.02	0.38	0.38	0.05	0.41	0.41		0.14			0.14	
Clearance Time (s)	7.0	7.0	7.0	7.0	7.0	7.0		7.0			7.0	
Vehicle Extension (s)	3.0	3.0	3.0	3.0	3.0	3.0		3.0			3.0	
Lane Grp Cap (vph)	29	1334	602	90	1387	657		213			236	
v/s Ratio Prot	0.00	0.13		c0.02	c0.28							
v/s Ratio Perm			0.01			0.00		c0.03			0.00	
v/c Ratio	0.17	0.35	0.02	0.48	0.67	0.00		0.18			0.02	
Uniform Delay, d1	24.0	11.0	9.6	22.8	11.7	8.5		18.6			18.2	
Progression Factor	1.00	1.00	1.00	1.00	1.00	1.00		1.00			1.00	
Incremental Delay, d2	2.8	0.2	0.0	4.0	1.2	0.0		0.4			0.0	
Delay (s)	26.8	11.1	9.6	26.8	12.9	8.5		19.0			18.2	
Level of Service	C	B	A	C	B	A		B			B	
Approach Delay (s)		11.2			13.5			19.0			18.2	
Approach LOS		B			B			B			B	

Intersection Summary				
HCM Average Control Delay	13.0	HCM Level of Service	B	
HCM Volume to Capacity ratio	0.46			
Actuated Cycle Length (s)	49.4	Sum of lost time (s)	14.0	
Intersection Capacity Utilization	51.7%	ICU Level of Service	A	
Analysis Period (min)	15			

c Critical Lane Group

HCM Unsignalized Intersection Capacity Analysis
200: Tall Cedars Pkwy & West Spine Road

LCPS (HS 7)
2015 Total Future

Movement	EBL	EBR	NBL	NBT	SBT	SBR
Lane Configurations						
Volume (veh/h)	35	84	64	428	670	57
Sign Control	Stop			Free	Free	
Grade	0%			0%	0%	
Peak Hour Factor	0.92	0.92	0.92	0.92	0.92	0.92
Hourly flow rate (vph)	38	91	70	465	728	62
Pedestrians						
Lane Width (ft)						
Walking Speed (ft/s)						
Percent Blockage						
Right turn flare (veh)						
Median type				None	None	
Median storage veh)						
Upstream signal (ft)						
pX, platoon unblocked						
vC, conflicting volume	1100	364	728			
vC1, stage 1 conf vol						
vC2, stage 2 conf vol						
vCu, unblocked vol	1100	364	728			
tC, single (s)	6.8	7.0	4.1			
tC, 2 stage (s)						
tF (s)	3.5	3.3	2.2			
p0 queue free %	80	86	92			
cM capacity (veh/h)	190	630	871			

Direction, Lane #	EB 1	EB 2	NB 1	NB 2	SB 1	SB 2	SB 3
Volume Total	38	91	225	310	364	364	62
Volume Left	38	0	70	0	0	0	0
Volume Right	0	91	0	0	0	0	62
cSH	190	630	871	1700	1700	1700	1700
Volume to Capacity	0.20	0.14	0.08	0.18	0.21	0.21	0.04
Queue Length 95th (ft)	18	13	6	0	0	0	0
Control Delay (s)	28.6	11.7	3.5	0.0	0.0	0.0	0.0
Lane LOS	D	B	A				
Approach Delay (s)	16.7		1.5		0.0		
Approach LOS	C						

Intersection Summary			
Average Delay	2.0		
Intersection Capacity Utilization	45.5%	ICU Level of Service	A
Analysis Period (min)	15		

HCM Signalized Intersection Capacity Analysis
300: Braddock Road & Gum Spring Road

LCPS (HS 7)
2015 Total Future

Movement	EBL	EBT	EBR	WBL	WBT	WBR	NBL	NBT	NBR	SBL	SBT	SBR
Lane Configurations												
Volume (vph)	119	209	45	90	316	158	36	179	51	128	290	111
Ideal Flow (vphpl)	1900	1900	1900	1900	1900	1900	1900	1900	1900	1900	1900	1900
Total Lost time (s)	7.0	7.0	7.0	7.0	7.0	7.0	7.0	7.0		7.0	7.0	7.0
Lane Util. Factor	1.00	1.00	1.00	1.00	1.00	1.00	1.00	0.95		1.00	0.95	1.00
Frt	1.00	1.00	0.85	1.00	1.00	0.85	1.00	0.97		1.00	1.00	0.85
Flt Protected	0.95	1.00	1.00	0.95	1.00	1.00	0.95	1.00		0.95	1.00	1.00
Satd. Flow (prot)	1770	1863	1583	1770	1863	1583	1770	3422		1770	3539	1583
Flt Permitted	0.33	1.00	1.00	0.62	1.00	1.00	0.56	1.00		0.43	1.00	1.00
Satd. Flow (perm)	607	1863	1583	1149	1863	1583	1044	3422		798	3539	1583
Peak-hour factor, PHF	0.92	0.92	0.92	0.92	0.92	0.92	0.92	0.92	0.92	0.92	0.92	0.92
Adj. Flow (vph)	129	227	49	98	343	172	39	195	55	139	315	121
RTOR Reduction (vph)	0	0	32	0	0	109	0	24	0	0	0	80
Lane Group Flow (vph)	129	227	17	98	343	63	39	226	0	139	315	41
Turn Type	pm+pt		pm+ov	pm+pt		pm+ov	pm+pt			pm+pt		pm+ov
Protected Phases	7	4	5	3	8	1	5	2		1	6	7
Permitted Phases	4		4	8		8	2			6		6
Actuated Green, G (s)	33.7	24.0	27.1	27.1	20.7	28.6	15.3	12.2		24.9	17.0	26.7
Effective Green, g (s)	33.7	24.0	27.1	27.1	20.7	28.6	15.3	12.2		24.9	17.0	26.7
Actuated g/C Ratio	0.43	0.31	0.35	0.35	0.26	0.36	0.19	0.16		0.32	0.22	0.34
Clearance Time (s)	7.0	7.0	7.0	7.0	7.0	7.0	7.0	7.0		7.0	7.0	7.0
Vehicle Extension (s)	3.0	3.0	3.0	3.0	3.0	3.0	3.0	3.0		3.0	3.0	3.0
Lane Grp Cap (vph)	404	570	688	447	491	718	232	532		351	766	680
v/s Ratio Prot	c0.04	c0.12	0.00	0.02	c0.18	0.01	0.01	0.07		c0.04	c0.09	0.01
v/s Ratio Perm	0.10		0.01	0.06		0.03	0.03			0.09		0.02
v/c Ratio	0.32	0.40	0.02	0.22	0.70	0.09	0.17	0.42		0.40	0.41	0.06
Uniform Delay, d1	14.5	21.5	17.0	17.8	26.1	16.4	26.0	30.0		20.0	26.4	17.4
Progression Factor	1.00	1.00	1.00	1.00	1.00	1.00	1.00	1.00		1.00	1.00	1.00
Incremental Delay, d2	0.5	0.5	0.0	0.2	4.3	0.1	0.3	0.5		0.7	0.4	0.0
Delay (s)	15.0	22.0	17.0	18.1	30.4	16.4	26.4	30.5		20.8	26.8	17.5
Level of Service	B	C	B	B	C	B	C	C		C	C	B
Approach Delay (s)		19.2			24.5			30.0			23.4	
Approach LOS		B			C			C			C	

Intersection Summary			
HCM Average Control Delay	23.8	HCM Level of Service	C
HCM Volume to Capacity ratio	0.64		
Actuated Cycle Length (s)	78.5	Sum of lost time (s)	35.0
Intersection Capacity Utilization	60.2%	ICU Level of Service	B
Analysis Period (min)	15		
c Critical Lane Group			

HCM Unsignalized Intersection Capacity Analysis
600: Road A & North Star Blvd.

LCPS (HS 7)
2015 Total Future

Movement	EBL	EBR	NBL	NBT	SBT	SBR
Lane Configurations						
Sign Control	Stop			Stop	Stop	
Volume (vph)	4	26	27	31	16	2
Peak Hour Factor	0.92	0.92	0.92	0.92	0.92	0.92
Hourly flow rate (vph)	4	28	29	34	17	2

Direction, Lane #	EB 1	EB 2	NB 1	NB 2	SB 1	SB 2
Volume Total (vph)	4	28	29	34	17	2
Volume Left (vph)	4	0	29	0	0	0
Volume Right (vph)	0	28	0	0	0	2
Hadj (s)	2.20	1.00	2.20	0.03	0.03	1.00
Departure Headway (s)	6.9	5.7	6.8	4.6	4.7	5.7
Degree Utilization, x	0.01	0.04	0.06	0.04	0.02	0.00
Capacity (veh/h)	503	613	518	758	758	623
Control Delay (s)	8.8	7.8	9.0	6.7	6.6	7.5
Approach Delay (s)	7.9		7.8		6.7	
Approach LOS	A		A		A	

Intersection Summary			
Delay	7.6		
HCM Level of Service	A		
Intersection Capacity Utilization	18.2%	ICU Level of Service	A
Analysis Period (min)	15		

Movement	EBL	EBR	NBL	NBT	SBT	SBR
Lane Configurations						
Sign Control	Stop			Stop	Stop	
Volume (vph)	52	154	111	7	8	34
Peak Hour Factor	0.92	0.92	0.92	0.92	0.92	0.92
Hourly flow rate (vph)	57	167	121	8	9	37

Direction, Lane #	EB 1	EB 2	NB 1	NB 2	SB 1	SB 2
Volume Total (vph)	57	167	121	8	9	37
Volume Left (vph)	57	0	121	0	0	0
Volume Right (vph)	0	167	0	0	0	37
Hadj (s)	0.53	-0.67	0.53	1.70	1.50	-0.67
Departure Headway (s)	5.5	4.3	5.6	6.8	6.7	4.5
Degree Utilization, x	0.09	0.20	0.19	0.01	0.02	0.05
Capacity (veh/h)	626	805	617	510	513	754
Control Delay (s)	7.8	7.2	8.7	8.7	8.6	6.5
Approach Delay (s)	7.3		8.7		6.9	
Approach LOS	A		A		A	

Intersection Summary			
Delay	7.7		
HCM Level of Service	A		
Intersection Capacity Utilization	22.8%	ICU Level of Service	A
Analysis Period (min)	15		

Movement	EBL	EBT	WBT	WBR	SBL	SBR
Lane Configurations						
Volume (veh/h)	123	163	231	71	68	137
Sign Control		Free	Free		Stop	
Grade		0%	0%		0%	
Peak Hour Factor	0.92	0.92	0.92	0.92	0.92	0.92
Hourly flow rate (vph)	134	177	251	77	74	149
Pedestrians						
Lane Width (ft)						
Walking Speed (ft/s)						
Percent Blockage						
Right turn flare (veh)						12
Median type		None	None			
Median storage veh)						
Upstream signal (ft)						
pX, platoon unblocked						
vC, conflicting volume	328				696	251
vC1, stage 1 conf vol						
vC2, stage 2 conf vol						
vCu, unblocked vol	328				696	251
tC, single (s)	4.1				6.5	6.4
tC, 2 stage (s)						
tF (s)	2.2				3.6	3.5
p0 queue free %	89				79	80
cM capacity (veh/h)	1215				358	748

Direction, Lane #	EB 1	WB 1	WB 2	SB 1
Volume Total	311	251	77	223
Volume Left	134	0	0	74
Volume Right	0	0	77	149
cSH	1215	1700	1700	1078
Volume to Capacity	0.11	0.15	0.05	0.21
Queue Length 95th (ft)	9	0	0	19
Control Delay (s)	4.2	0.0	0.0	13.2
Lane LOS	A			B
Approach Delay (s)	4.2	0.0		13.2
Approach LOS				B

Intersection Summary			
Average Delay	4.9		
Intersection Capacity Utilization	41.3%	ICU Level of Service	A
Analysis Period (min)	15		

APPENDIX L-4

INTERSECTION CAPACITY ANALYSIS RESULTS– FUTURE CONDITIONS WITH PROPOSED DEVELOPMENT (2015) – ES PEAK, ALTERNATIVE 2

HCM Signalized Intersection Capacity Analysis
100: Route 50 & Goshen Road

LCPS (HS 7)
2015 Total Future

Movement	EBL	EBT	EBR	WBL	WBT	WBR	NBL	NBT	NBR	SBL	SBT	SBR
Lane Configurations												
Volume (vph)	16	1277	22	44	388	14	35	16	43	6	1	0
Ideal Flow (vphpl)	1900	1900	1900	1900	1900	1900	1900	1900	1900	1900	1900	1900
Total Lost time (s)	7.0	7.0	7.0	7.0	7.0	7.0		7.0			7.0	
Lane Util. Factor	1.00	0.95	1.00	1.00	0.95	1.00		1.00			1.00	
Frt	1.00	1.00	0.85	1.00	1.00	0.85		0.94			1.00	
Flt Protected	0.95	1.00	1.00	0.95	1.00	1.00		0.98			0.96	
Satd. Flow (prot)	1770	3505	1524	1736	3343	1583		1715			1785	
Flt Permitted	0.95	1.00	1.00	0.95	1.00	1.00		0.87			0.74	
Satd. Flow (perm)	1770	3505	1524	1736	3343	1583		1527			1375	
Peak-hour factor, PHF	0.92	0.92	0.92	0.92	0.92	0.92	0.92	0.92	0.92	0.92	0.92	0.92
Adj. Flow (vph)	17	1388	24	48	422	15	38	17	47	7	1	0
RTOR Reduction (vph)	0	0	8	0	0	6	0	17	0	0	0	0
Lane Group Flow (vph)	17	1388	16	48	422	9	0	85	0	0	8	0
Heavy Vehicles (%)	2%	3%	6%	4%	8%	2%	2%	2%	2%	2%	2%	2%
Turn Type	Prot		Perm	Prot		Perm	Perm			Perm		
Protected Phases	5	2		1	6			8			4	
Permitted Phases			2			6	8			4		
Actuated Green, G (s)	2.4	45.6	45.6	6.3	49.5	49.5		10.8			10.8	
Effective Green, g (s)	2.4	45.6	45.6	6.3	49.5	49.5		10.8			10.8	
Actuated g/C Ratio	0.03	0.54	0.54	0.08	0.59	0.59		0.13			0.13	
Clearance Time (s)	7.0	7.0	7.0	7.0	7.0	7.0		7.0			7.0	
Vehicle Extension (s)	3.0	3.0	3.0	3.0	3.0	3.0		3.0			3.0	
Lane Grp Cap (vph)	51	1910	830	131	1977	936		197			177	
v/s Ratio Prot	0.01	c0.40		c0.03	c0.13							
v/s Ratio Perm			0.01			0.01		c0.06			0.01	
v/c Ratio	0.33	0.73	0.02	0.37	0.21	0.01		0.43			0.05	
Uniform Delay, d1	39.9	14.4	8.8	36.8	8.0	7.0		33.6			31.9	
Progression Factor	1.00	1.00	1.00	1.00	1.00	1.00		1.00			1.00	
Incremental Delay, d2	3.8	1.4	0.0	1.7	0.1	0.0		1.5			0.1	
Delay (s)	43.7	15.8	8.8	38.5	8.1	7.0		35.2			32.0	
Level of Service	D	B	A	D	A	A		D			C	
Approach Delay (s)		16.0			11.0			35.2			32.0	
Approach LOS		B			B			D			C	

Intersection Summary			
HCM Average Control Delay	15.8	HCM Level of Service	B
HCM Volume to Capacity ratio	0.73		
Actuated Cycle Length (s)	83.7	Sum of lost time (s)	28.0
Intersection Capacity Utilization	53.3%	ICU Level of Service	A
Analysis Period (min)	15		

c Critical Lane Group

HCM Unsignalized Intersection Capacity Analysis
200: Tall Cedars Pkwy & West Spine Road

LCPS (HS 7)
2015 Total Future

Movement	EBL	EBR	NBL	NBT	SBT	SBR
Lane Configurations						
Volume (veh/h)	58	94	87	823	312	49
Sign Control	Stop			Free	Free	
Grade	0%			0%	0%	
Peak Hour Factor	0.92	0.92	0.92	0.92	0.92	0.92
Hourly flow rate (vph)	63	102	95	895	339	53
Pedestrians						
Lane Width (ft)						
Walking Speed (ft/s)						
Percent Blockage						
Right turn flare (veh)						
Median type				None	None	
Median storage veh)						
Upstream signal (ft)						
pX, platoon unblocked						
vC, conflicting volume	976	170	339			
vC1, stage 1 conf vol						
vC2, stage 2 conf vol						
vCu, unblocked vol	976	170	339			
tC, single (s)	6.8	6.9	4.1			
tC, 2 stage (s)						
tF (s)	3.5	3.3	2.2			
p0 queue free %	73	88	92			
cM capacity (veh/h)	229	845	1217			

Direction, Lane #	EB 1	EB 2	NB 1	NB 2	SB 1	SB 2	SB 3
Volume Total	63	102	393	596	170	170	53
Volume Left	63	0	95	0	0	0	0
Volume Right	0	102	0	0	0	0	53
cSH	229	845	1217	1700	1700	1700	1700
Volume to Capacity	0.27	0.12	0.08	0.35	0.10	0.10	0.03
Queue Length 95th (ft)	27	10	6	0	0	0	0
Control Delay (s)	26.5	9.8	2.6	0.0	0.0	0.0	0.0
Lane LOS	D	A	A				
Approach Delay (s)	16.2		1.0		0.0		
Approach LOS	C						

Intersection Summary			
Average Delay	2.4		
Intersection Capacity Utilization	47.2%	ICU Level of Service	A
Analysis Period (min)	15		

HCM Signalized Intersection Capacity Analysis
300: Braddock Road & Gum Spring Road

LCPS (HS 7)
2015 Total Future

Movement	EBL	EBT	EBR	WBL	WBT	WBR	NBL	NBT	NBR	SBL	SBT	SBR
Lane Configurations												
Volume (vph)	160	417	36	72	204	154	45	327	152	253	170	79
Ideal Flow (vphpl)	1900	1900	1900	1900	1900	1900	1900	1900	1900	1900	1900	1900
Total Lost time (s)	7.0	7.0	7.0	7.0	7.0	7.0	7.0	7.0		7.0	7.0	7.0
Lane Util. Factor	1.00	1.00	1.00	1.00	1.00	1.00	1.00	0.95		1.00	0.95	1.00
Frt	1.00	1.00	0.85	1.00	1.00	0.85	1.00	0.95		1.00	1.00	0.85
Flt Protected	0.95	1.00	1.00	0.95	1.00	1.00	0.95	1.00		0.95	1.00	1.00
Satd. Flow (prot)	1770	1863	1583	1770	1863	1583	1770	3371		1770	3539	1583
Flt Permitted	0.52	1.00	1.00	0.27	1.00	1.00	0.64	1.00		0.22	1.00	1.00
Satd. Flow (perm)	973	1863	1583	502	1863	1583	1183	3371		413	3539	1583
Peak-hour factor, PHF	0.92	0.92	0.92	0.92	0.92	0.92	0.92	0.92	0.92	0.92	0.92	0.92
Adj. Flow (vph)	174	453	39	78	222	167	49	355	165	275	185	86
RTOR Reduction (vph)	0	0	26	0	0	76	0	48	0	0	0	53
Lane Group Flow (vph)	174	453	13	78	222	91	49	472	0	275	185	33
Turn Type	pm+pt		pm+ov	pm+pt		pm+ov	pm+pt			pm+pt		pm+ov
Protected Phases	7	4	5	3	8	1	5	2		1	6	7
Permitted Phases	4		4	8		8	2			6		6
Actuated Green, G (s)	34.4	29.2	32.2	30.0	27.0	41.6	21.9	18.9		40.5	30.5	35.7
Effective Green, g (s)	34.4	29.2	32.2	30.0	27.0	41.6	21.9	18.9		40.5	30.5	35.7
Actuated g/C Ratio	0.37	0.31	0.34	0.32	0.29	0.44	0.23	0.20		0.43	0.33	0.38
Clearance Time (s)	7.0	7.0	7.0	7.0	7.0	7.0	7.0	7.0		7.0	7.0	7.0
Vehicle Extension (s)	3.0	3.0	3.0	3.0	3.0	3.0	3.0	3.0		3.0	3.0	3.0
Lane Grp Cap (vph)	401	581	662	201	537	821	295	680		390	1152	721
v/s Ratio Prot	c0.02	c0.24	0.00	0.01	0.12	0.02	0.01	0.14		c0.11	0.05	0.00
v/s Ratio Perm	0.14		0.01	0.11		0.04	0.03			c0.20		0.02
v/c Ratio	0.43	0.78	0.02	0.39	0.41	0.11	0.17	0.69		0.71	0.16	0.05
Uniform Delay, d1	21.7	29.3	20.3	23.6	27.0	15.2	28.3	34.7		19.3	22.5	18.3
Progression Factor	1.00	1.00	1.00	1.00	1.00	1.00	1.00	1.00		1.00	1.00	1.00
Incremental Delay, d2	0.8	6.6	0.0	1.2	0.5	0.1	0.3	3.1		5.7	0.1	0.0
Delay (s)	22.4	35.9	20.3	24.8	27.5	15.3	28.6	37.8		25.0	22.6	18.3
Level of Service	C	D	C	C	C	B	C	D		C	C	B
Approach Delay (s)		31.5			22.7			37.0			23.1	
Approach LOS		C			C			D			C	

Intersection Summary			
HCM Average Control Delay	29.0	HCM Level of Service	C
HCM Volume to Capacity ratio	0.64		
Actuated Cycle Length (s)	93.7	Sum of lost time (s)	14.0
Intersection Capacity Utilization	77.2%	ICU Level of Service	D
Analysis Period (min)	15		
c Critical Lane Group			

HCM Unsignalized Intersection Capacity Analysis
600: Road A & North Star Blvd.

LCPS (HS 7)
2015 Total Future

Movement	EBL	EBR	NBL	NBT	SBT	SBR
Lane Configurations						
Sign Control	Stop			Stop	Stop	
Volume (vph)	1	41	40	12	18	2
Peak Hour Factor	0.92	0.92	0.92	0.92	0.92	0.92
Hourly flow rate (vph)	1	45	43	13	20	2

Direction, Lane #	EB 1	EB 2	NB 1	NB 2	SB 1	SB 2
Volume Total (vph)	1	45	43	13	20	2
Volume Left (vph)	1	0	43	0	0	0
Volume Right (vph)	0	45	0	0	0	2
Hadj (s)	2.20	-0.38	1.83	0.03	0.03	1.00
Departure Headway (s)	6.9	4.3	6.4	4.7	4.7	5.7
Degree Utilization, x	0.00	0.05	0.08	0.02	0.03	0.00
Capacity (veh/h)	503	805	547	755	756	621
Control Delay (s)	8.7	6.4	8.8	6.5	6.6	7.5
Approach Delay (s)	6.4		8.3		6.7	
Approach LOS	A		A		A	

Intersection Summary			
Delay	7.3		
HCM Level of Service	A		
Intersection Capacity Utilization	18.9%	ICU Level of Service	A
Analysis Period (min)	15		

Movement	EBL	EBR	NBL	NBT	SBT	SBR
Lane Configurations						
Sign Control	Stop			Stop	Stop	
Volume (vph)	36	170	247	16	11	49
Peak Hour Factor	0.92	0.92	0.92	0.92	0.92	0.92
Hourly flow rate (vph)	39	185	268	17	12	53

Direction, Lane #	EB 1	EB 2	NB 1	NB 2	SB 1	SB 2
Volume Total (vph)	39	185	268	17	12	53
Volume Left (vph)	39	0	268	0	0	0
Volume Right (vph)	0	185	0	0	0	53
Hadj (s)	0.53	-0.67	0.53	1.70	1.24	-0.67
Departure Headway (s)	6.0	4.8	5.7	6.9	6.7	4.7
Degree Utilization, x	0.06	0.25	0.42	0.03	0.02	0.07
Capacity (veh/h)	567	711	616	506	512	715
Control Delay (s)	8.2	8.1	11.6	8.9	8.6	6.9
Approach Delay (s)	8.1		11.4		7.2	
Approach LOS	A		B		A	

Intersection Summary			
Delay	9.7		
HCM Level of Service	A		
Intersection Capacity Utilization	30.4%	ICU Level of Service	A
Analysis Period (min)	15		

Movement	EBL	EBT	WBT	WBR	SBL	SBR
Lane Configurations						
Volume (veh/h)	203	219	92	106	100	167
Sign Control		Free	Free		Stop	
Grade		0%	0%		0%	
Peak Hour Factor	0.92	0.92	0.92	0.92	0.92	0.92
Hourly flow rate (vph)	221	238	100	115	109	182
Pedestrians						
Lane Width (ft)						
Walking Speed (ft/s)						
Percent Blockage						
Right turn flare (veh)						12
Median type		None	None			
Median storage veh)						
Upstream signal (ft)						
pX, platoon unblocked						
vC, conflicting volume	215				779	100
vC1, stage 1 conf vol						
vC2, stage 2 conf vol						
vCu, unblocked vol	215				779	100
tC, single (s)	4.1				6.4	6.2
tC, 2 stage (s)						
tF (s)	2.2				3.5	3.3
p0 queue free %	84				64	81
cM capacity (veh/h)	1355				305	956

Direction, Lane #	EB 1	WB 1	WB 2	SB 1
Volume Total	459	100	115	290
Volume Left	221	0	0	109
Volume Right	0	0	115	182
cSH	1355	1700	1700	814
Volume to Capacity	0.16	0.06	0.07	0.36
Queue Length 95th (ft)	15	0	0	41
Control Delay (s)	4.7	0.0	0.0	14.7
Lane LOS	A			B
Approach Delay (s)	4.7	0.0		14.7
Approach LOS				B

Intersection Summary			
Average Delay	6.7		
Intersection Capacity Utilization	41.6%	ICU Level of Service	A
Analysis Period (min)	15		

HCM Signalized Intersection Capacity Analysis
100: Route 50 & Goshen Road

LCPS (HS 7)
2015 Total Future

Movement	EBL	EBT	EBR	WBL	WBT	WBR	NBL	NBT	NBR	SBL	SBT	SBR
Lane Configurations												
Volume (vph)	5	435	31	37	850	2	22	1	37	1	3	2
Ideal Flow (vphpl)	1900	1900	1900	1900	1900	1900	1900	1900	1900	1900	1900	1900
Total Lost time (s)	7.0	7.0	7.0	7.0	7.0	7.0		7.0			7.0	
Lane Util. Factor	1.00	0.95	1.00	1.00	0.95	1.00		1.00			1.00	
Frt	1.00	1.00	0.85	1.00	1.00	0.85		0.92			0.95	
Flt Protected	0.95	1.00	1.00	0.95	1.00	1.00		0.98			0.99	
Satd. Flow (prot)	1770	3505	1583	1770	3343	1583		1613			1764	
Flt Permitted	0.95	1.00	1.00	0.95	1.00	1.00		0.88			0.93	
Satd. Flow (perm)	1770	3505	1583	1770	3343	1583		1439			1649	
Peak-hour factor, PHF	0.92	0.92	0.92	0.92	0.92	0.92	0.92	0.92	0.92	0.92	0.92	0.92
Adj. Flow (vph)	5	473	34	40	924	2	24	1	40	1	3	2
RTOR Reduction (vph)	0	0	21	0	0	1	0	31	0	0	2	0
Lane Group Flow (vph)	5	473	13	40	924	1	0	34	0	0	4	0
Heavy Vehicles (%)	2%	3%	2%	2%	8%	2%	8%	2%	5%	2%	2%	2%
Turn Type	Prot		Perm	Prot		Perm	Perm			Perm		
Protected Phases	5	2		1	6			8			4	
Permitted Phases			2			6	8			4		
Actuated Green, G (s)	0.8	18.8	18.8	2.4	20.4	20.4		7.0			7.0	
Effective Green, g (s)	0.8	18.8	18.8	2.4	20.4	20.4		7.0			7.0	
Actuated g/C Ratio	0.02	0.38	0.38	0.05	0.41	0.41		0.14			0.14	
Clearance Time (s)	7.0	7.0	7.0	7.0	7.0	7.0		7.0			7.0	
Vehicle Extension (s)	3.0	3.0	3.0	3.0	3.0	3.0		3.0			3.0	
Lane Grp Cap (vph)	29	1339	605	86	1386	656		205			235	
v/s Ratio Prot	0.00	0.13		c0.02	c0.28							
v/s Ratio Perm			0.01			0.00		c0.02			0.00	
v/c Ratio	0.17	0.35	0.02	0.47	0.67	0.00		0.17			0.02	
Uniform Delay, d1	23.9	10.9	9.5	22.8	11.6	8.4		18.5			18.1	
Progression Factor	1.00	1.00	1.00	1.00	1.00	1.00		1.00			1.00	
Incremental Delay, d2	2.8	0.2	0.0	3.9	1.2	0.0		0.4			0.0	
Delay (s)	26.7	11.0	9.5	26.7	12.9	8.4		18.9			18.2	
Level of Service	C	B	A	C	B	A		B			B	
Approach Delay (s)		11.1			13.4			18.9			18.2	
Approach LOS		B			B			B			B	

Intersection Summary			
HCM Average Control Delay	12.9	HCM Level of Service	B
HCM Volume to Capacity ratio	0.45		
Actuated Cycle Length (s)	49.2	Sum of lost time (s)	14.0
Intersection Capacity Utilization	49.3%	ICU Level of Service	A
Analysis Period (min)	15		

c Critical Lane Group

HCM Unsignalized Intersection Capacity Analysis
200: Tall Cedars Pkwy & West Spine Road

LCPS (HS 7)
2015 Total Future

Movement	EBL	EBR	NBL	NBT	SBT	SBR
Lane Configurations						
Volume (veh/h)	33	84	64	428	670	56
Sign Control	Stop			Free	Free	
Grade	0%			0%	0%	
Peak Hour Factor	0.92	0.92	0.92	0.92	0.92	0.92
Hourly flow rate (vph)	36	91	70	465	728	61
Pedestrians						
Lane Width (ft)						
Walking Speed (ft/s)						
Percent Blockage						
Right turn flare (veh)						
Median type				None	None	
Median storage veh)						
Upstream signal (ft)						
pX, platoon unblocked						
vC, conflicting volume	1100	364	728			
vC1, stage 1 conf vol						
vC2, stage 2 conf vol						
vCu, unblocked vol	1100	364	728			
tC, single (s)	6.8	6.9	4.1			
tC, 2 stage (s)						
tF (s)	3.5	3.3	2.2			
p0 queue free %	81	86	92			
cM capacity (veh/h)	190	633	871			

Direction, Lane #	EB 1	EB 2	NB 1	NB 2	SB 1	SB 2	SB 3
Volume Total	36	91	225	310	364	364	61
Volume Left	36	0	70	0	0	0	0
Volume Right	0	91	0	0	0	0	61
cSH	190	633	871	1700	1700	1700	1700
Volume to Capacity	0.19	0.14	0.08	0.18	0.21	0.21	0.04
Queue Length 95th (ft)	17	13	6	0	0	0	0
Control Delay (s)	28.3	11.6	3.5	0.0	0.0	0.0	0.0
Lane LOS	D	B	A				
Approach Delay (s)	16.3		1.5		0.0		
Approach LOS	C						

Intersection Summary			
Average Delay	2.0		
Intersection Capacity Utilization	45.5%	ICU Level of Service	A
Analysis Period (min)	15		

HCM Signalized Intersection Capacity Analysis
300: Braddock Road & Gum Spring Road

LCPS (HS 7)
2015 Total Future

Movement	EBL	EBT	EBR	WBL	WBT	WBR	NBL	NBT	NBR	SBL	SBT	SBR
Lane Configurations												
Volume (vph)	118	242	44	90	332	158	35	179	51	128	290	111
Ideal Flow (vphpl)	1900	1900	1900	1900	1900	1900	1900	1900	1900	1900	1900	1900
Total Lost time (s)	7.0	7.0	7.0	7.0	7.0	7.0	7.0	7.0		7.0	7.0	7.0
Lane Util. Factor	1.00	1.00	1.00	1.00	1.00	1.00	1.00	0.95		1.00	0.95	1.00
Frt	1.00	1.00	0.85	1.00	1.00	0.85	1.00	0.97		1.00	1.00	0.85
Flt Protected	0.95	1.00	1.00	0.95	1.00	1.00	0.95	1.00		0.95	1.00	1.00
Satd. Flow (prot)	1770	1863	1583	1770	1863	1583	1770	3422		1770	3539	1583
Flt Permitted	0.31	1.00	1.00	0.60	1.00	1.00	0.56	1.00		0.43	1.00	1.00
Satd. Flow (perm)	578	1863	1583	1112	1863	1583	1044	3422		800	3539	1583
Peak-hour factor, PHF	0.92	0.92	0.92	0.92	0.92	0.92	0.92	0.92	0.92	0.92	0.92	0.92
Adj. Flow (vph)	128	263	48	98	361	172	38	195	55	139	315	121
RTOR Reduction (vph)	0	0	31	0	0	108	0	25	0	0	0	80
Lane Group Flow (vph)	128	263	17	98	361	64	38	225	0	139	315	41
Turn Type	pm+pt		pm+ov	pm+pt		pm+ov	pm+pt			pm+pt		pm+ov
Protected Phases	7	4	5	3	8	1	5	2		1	6	7
Permitted Phases	4		4	8		8	2			6		6
Actuated Green, G (s)	34.4	24.8	27.9	28.0	21.6	29.5	15.4	12.3		25.0	17.1	26.7
Effective Green, g (s)	34.4	24.8	27.9	28.0	21.6	29.5	15.4	12.3		25.0	17.1	26.7
Actuated g/C Ratio	0.43	0.31	0.35	0.35	0.27	0.37	0.19	0.15		0.31	0.22	0.34
Clearance Time (s)	7.0	7.0	7.0	7.0	7.0	7.0	7.0	7.0		7.0	7.0	7.0
Vehicle Extension (s)	3.0	3.0	3.0	3.0	3.0	3.0	3.0	3.0		3.0	3.0	3.0
Lane Grp Cap (vph)	395	582	696	445	507	728	231	530		348	762	672
v/s Ratio Prot	c0.04	c0.14	0.00	0.02	c0.19	0.01	0.01	0.07		c0.04	c0.09	0.01
v/s Ratio Perm	0.10		0.01	0.06		0.03	0.03			0.09		0.02
v/c Ratio	0.32	0.45	0.02	0.22	0.71	0.09	0.16	0.43		0.40	0.41	0.06
Uniform Delay, d1	14.6	21.9	16.8	17.6	26.1	16.2	26.4	30.4		20.4	26.8	17.9
Progression Factor	1.00	1.00	1.00	1.00	1.00	1.00	1.00	1.00		1.00	1.00	1.00
Incremental Delay, d2	0.5	0.6	0.0	0.3	4.7	0.1	0.3	0.6		0.8	0.4	0.0
Delay (s)	15.1	22.4	16.9	17.9	30.8	16.3	26.7	30.9		21.1	27.2	17.9
Level of Service	B	C	B	B	C	B	C	C		C	C	B
Approach Delay (s)		19.7			24.8			30.4			23.8	
Approach LOS		B			C			C			C	

Intersection Summary			
HCM Average Control Delay	24.2	HCM Level of Service	C
HCM Volume to Capacity ratio	0.65		
Actuated Cycle Length (s)	79.4	Sum of lost time (s)	35.0
Intersection Capacity Utilization	61.0%	ICU Level of Service	B
Analysis Period (min)	15		
c Critical Lane Group			

HCM Unsignalized Intersection Capacity Analysis
600: Road A & North Star Blvd.

LCPS (HS 7)
2015 Total Future

Movement	EBL	EBR	NBL	NBT	SBT	SBR
Lane Configurations						
Sign Control	Stop			Stop	Stop	
Volume (vph)	2	28	29	14	8	1
Peak Hour Factor	0.92	0.92	0.92	0.92	0.92	0.92
Hourly flow rate (vph)	2	30	32	15	9	1

Direction, Lane #	EB 1	EB 2	NB 1	NB 2	SB 1	SB 2
Volume Total (vph)	2	30	32	15	9	1
Volume Left (vph)	2	0	32	0	0	0
Volume Right (vph)	0	30	0	0	0	1
Hadj (s)	2.20	1.00	0.96	0.03	0.03	1.00
Departure Headway (s)	6.8	5.6	5.6	4.6	4.7	5.6
Degree Utilization, x	0.00	0.05	0.05	0.02	0.01	0.00
Capacity (veh/h)	510	623	634	759	761	625
Control Delay (s)	8.7	7.7	7.7	6.5	6.5	7.4
Approach Delay (s)	7.8		7.3		6.6	
Approach LOS	A		A		A	

Intersection Summary			
Delay	7.4		
HCM Level of Service	A		
Intersection Capacity Utilization	18.3%	ICU Level of Service	A
Analysis Period (min)	15		

Movement	EBL	EBR	NBL	NBT	SBT	SBR
Lane Configurations						
Sign Control	Stop			Stop	Stop	
Volume (vph)	35	178	123	8	11	25
Peak Hour Factor	0.92	0.92	0.92	0.92	0.92	0.92
Hourly flow rate (vph)	38	193	134	9	12	27

Direction, Lane #	EB 1	EB 2	NB 1	NB 2	SB 1	SB 2
Volume Total (vph)	38	193	134	9	12	27
Volume Left (vph)	38	0	134	0	0	0
Volume Right (vph)	0	193	0	0	0	27
Hadj (s)	0.53	-0.67	0.53	1.70	1.70	-0.67
Departure Headway (s)	5.5	4.3	5.6	6.8	6.9	4.5
Degree Utilization, x	0.06	0.23	0.21	0.02	0.02	0.03
Capacity (veh/h)	632	799	616	508	495	747
Control Delay (s)	7.7	7.4	8.9	8.7	8.9	6.5
Approach Delay (s)	7.5		8.9		7.2	
Approach LOS	A		A		A	

Intersection Summary			
Delay	7.9		
HCM Level of Service	A		
Intersection Capacity Utilization	23.5%	ICU Level of Service	A
Analysis Period (min)	15		

Movement	EBL	EBT	WBT	WBR	SBL	SBR
Lane Configurations						
Volume (veh/h)	121	163	231	85	97	134
Sign Control		Free	Free		Stop	
Grade		0%	0%		0%	
Peak Hour Factor	0.92	0.92	0.92	0.92	0.92	0.92
Hourly flow rate (vph)	132	177	251	92	105	146
Pedestrians						
Lane Width (ft)						
Walking Speed (ft/s)						
Percent Blockage						
Right turn flare (veh)						12
Median type		None	None			
Median storage veh)						
Upstream signal (ft)						
pX, platoon unblocked						
vC, conflicting volume	343				691	251
vC1, stage 1 conf vol						
vC2, stage 2 conf vol						
vCu, unblocked vol	343				691	251
tC, single (s)	4.1				6.4	6.2
tC, 2 stage (s)						
tF (s)	2.2				3.5	3.3
p0 queue free %	89				71	82
cM capacity (veh/h)	1216				366	788

Direction, Lane #	EB 1	WB 1	WB 2	SB 1
Volume Total	309	251	92	251
Volume Left	132	0	0	105
Volume Right	0	0	92	146
cSH	1216	1700	1700	871
Volume to Capacity	0.11	0.15	0.05	0.29
Queue Length 95th (ft)	9	0	0	30
Control Delay (s)	4.1	0.0	0.0	14.0
Lane LOS	A			B
Approach Delay (s)	4.1	0.0		14.0
Approach LOS				B

Intersection Summary			
Average Delay	5.3		
Intersection Capacity Utilization	42.8%	ICU Level of Service	A
Analysis Period (min)	15		

APPENDIX M

APPROVED DEVELOPMENT TRIP GENERATION AND SITE VOLUMES (2020)

Table 1: 2020 FUTURE BACKGROUND TRIP GENERATION WORKSHEET

Land Use	ITE Code	Size	------ Weekday ------ AM Peak Hour In	AM Peak Hour Out	AM Peak Hour Total	PM Peak Hour In	PM Peak Hour Out	PM Peak Hour Total	Daily Total
Westport By-Right Property									
Single-Family Detached Housing	210	799 DU	142	427	569	445	251	696	7,036
Lenah Property									
Single-Family Detached Housing	210	307 DU	56	165	221	183	107	290	2,875
Stone Ridge									
Residential		1,605 DU	31	255	287	213	121	334	8,204
Retail/Ancellary Use		137,000 SF	345	265	610	269	284	553	5,718
			254	36	290	9	209	218	2,153
Subtotal Stone Ridge Trips			630	556	1,187	491	613	1,104	16,074
Marrwood Property									
Single-Family Detached Housing	210	73 DU	15	46	61	52	29	81	730
C.D. Smith									
Single-Family Detached Housing	210	77 DU	16	47	63	54	30	84	765
Residential Condominium/Townhouse	230	107 DU	9	46	55	43	21	64	931
Subtotal C.D.Smith Trips		184 DU	25	92	117	97	51	148	1,696
Loudoun County Public School MS 5									
Middle School	522	1,350 Students	401	328	729	106	110	216	2,187
Kirkpatrick Farms									
Single-Family Detached Housing	210	469 DU	85	253	338	272	159	431	4,310
Residential Condominium/Townhouse	220	27 DU	4	15	19	15	6	21	211
Subtotal Kirkpatrick Farms Trips		496 DU	89	268	357	287	165	452	4,521
Kirkpatrick Farms West									
Single-Family Detached Housing	210	95 DU	19	57	76	65	37	102	945
Single-Family Attached Housing	230	92 DU	8	40	48	38	18	56	800
Subtotal Kirkpatrick Farms West Trips		187 DU	27	97	124	103	55	158	1,745
Braddock Corner									
Single-Family Detached Housing	210	15 DU	5	15	20	13	7	20	182
Single-Family Attached Housing	230	31 DU	4	17	21	17	7	24	238
Subtotal Braddock Corner Trips		46	9	32	41	30	14	44	420
Greenfields Property									
Single-Family Detached Housing	210	673 DU	129	369	498	442	238	680	6,730
Gum Spring Village Center									
Subtotal Gum Spring Village Center Trips			158	132	291	327	325	652	6,118
Providence Glen									
Single-Family Detached Housing	210	20 DU	6	17	23	16	9	25	200
Single-Family Attached Housing	230	59 DU	6	28	34	26	13	39	513
Subtotal Providence Glen Trips		79	12	45	57	42	22	64	713
Arcola Center									
Subtotal Arcola Center Trips			1,999	856	2,855	1,823	2,755	4,599	48,138
Braddock Crossing									
Single-Family Detached Housing	210	58 DU	13	38	51	42	24	66	630
Single-Family Attached Housing	230	134 DU	12	54	66	52	25	77	824
Subtotal Braddock Crossing Trips		192	25	92	117	94	49	143	1,454
TOTAL FUTURE BACKGROUND TRIPS			**3,717**	**3,505**	**7,224**	**4,522**	**4,784**	**9,327**	**100,437**

2020 FB AM — **Braddock Road and Gum Spring Road**

	NB			SB			EB			WB		
	L	T	R	L	T	R	L	T	R	L	T	R
LCPS MS-5				28				100			82	23
Westport By-Right						18	56	51			17	
Lenah Property						4	11	38			13	
Braddock Crossing						3	8	25			9	
Stoneridge Total Uses	0	64	0	64	65	46	51	0	0	0	0	62
Marrwood Property							1	5			2	
C.D.Smith	2					4	16	39	6		11	
Kirkpatrick Farms	22					16	48	118	66		38	
Kirkpatrick Farms West						3	13	22	1		6	
Braddock Corner		2		12	9	7	2					3
Providence Glen		1		11	5	7	2					3
Gum Spring Village Center		36		6	30	9	11					7
Greenfields Property	5					17	48	116	15		41	
Arcola Center		108		85	46	23	54					198
Total Trips (Commuter Peak)	**29**	**211**	**0**	**178**	**155**	**157**	**321**	**414**	**88**	**0**	**137**	**273**
Total Trips (ES Peak)	**28**	**200**	**0**	**169**	**147**	**149**	**305**	**393**	**84**	**0**	**130**	**259**
Total Trips (HS Peak)	**29**	**211**	**0**	**206**	**155**	**157**	**321**	**514**	**88**	**0**	**219**	**296**

2020 FB AM — **Braddock Road and Goshen Road**

	NB			SB			EB			WB		
	L	T	R	L	T	R	L	T	R	L	T	R
LCPS MS-5								100			82	
Westport By-Right								128			43	
Lenah Property								65			43	
Braddock Crossing								44			28	
Stoneridge Total Uses	0	0	0	0	0	0	0	51	0	0	52	0
Marrwood Property								11			4	
C.D.Smith								6			22	
Kirkpatrick Farms								17			54	
Kirkpatrick Farms West								5			18	
Braddock Corner								1			6	
Providence Glen								1			4	
Gum Spring Village Center								11			9	
Greenfields Property								97			41	
Arcola Center								54			23	
Total Trips (Commuter Peak)	**0**	**0**	**0**	**0**	**0**	**0**	**0**	**491**	**0**	**0**	**347**	**0**
Total Trips (ES Peak)	**0**	**0**	**0**	**0**	**0**	**0**	**0**	**466**	**0**	**0**	**329**	**0**
Total Trips (HS Peak)	**0**	**0**	**0**	**0**	**0**	**0**	**0**	**591**	**0**	**0**	**429**	**0**

2020 FB AM — **Route 50 and Goshen Road**

	NB			SB			EB			WB		
	L	T	R	L	T	R	L	T	R	L	T	R
LCPS MS-5												
Westport By-Right	24	0	12	0	0	0	0	2	8	24	6	0
Lenah Property								40			14	
Braddock Crossing								27			10	
Stoneridge Total Uses	0	0	0	0	0	0	0	50	0	0	51	0
Marrwood Property	7		11						2	4		
C.D.Smith								0			1	
Kirkpatrick Farms								1			4	
Kirkpatrick Farms West												
Braddock Corner								0			1	
Providence Glen								1			3	
Gum Spring Village Center								17			15	
Greenfields Property								6			2	
Arcola Center								300			127	
Total Trips (Commuter Peak)	**31**	**0**	**23**	**0**	**0**	**0**	**0**	**444**	**10**	**28**	**234**	**0**
Total Trips (ES Peak)	**29**	**0**	**22**	**0**	**0**	**0**	**0**	**421**	**9**	**26**	**222**	**0**
Total Trips (HS Peak)	**31**	**0**	**23**	**0**	**0**	**0**	**0**	**444**	**10**	**28**	**234**	**0**

2020 FB AM — **Braddock Rd and North Star Blvd. (Rel Rt.659)**

	NB			SB			EB			WB		
	L	T	R	L	T	R	L	T	R	L	T	R
LCPS MS-5								100			82	
Westport By-Right	7							107	21		36	
Lenah Property	6							49	16		17	
Braddock Crossing	4							33	11		12	
Stoneridge Total Uses	0	46	18	0	31	3	4	33	0	6	40	0
Marrwood Property	2							6	5		2	
C.D.Smith		3		60	10	22	6					16
Kirkpatrick Farms	19		50					11	6	18	35	
Kirkpatrick Farms West	18		36						5	10		
Braddock Corner								1		1	6	
Providence Glen			1					1		2	4	
Gum Spring Village Center								11			9	
Greenfields Property	9		87					92	5	30	32	
Arcola Center								54			23	
Total Trips (Commuter Peak)	**65**	**49**	**192**	**60**	**41**	**25**	**10**	**398**	**69**	**67**	**216**	**16**
Total Trips (ES Peak)	**62**	**46**	**182**	**57**	**38**	**23**	**10**	**378**	**66**	**63**	**205**	**15**
Total Trips (HS Peak)	**65**	**49**	**192**	**60**	**41**	**25**	**10**	**498**	**69**	**67**	**298**	**16**

2020 FB AM — **Gum Spring and Tall Cedars Pkwy**

	NB			SB			EB			WB		
	L	T	R	L	T	R	L	T	R	L	T	R
LCPS MS-5		23			28							
Westport By-Right		59	0		18							
Lenah Property		11	0		4							
Braddock Crossing		8			3							
Stoneridge Total Uses	118	0	0	0	0	136	121	0	175	0	0	0
Marrwood Property		1	0		0							
C.D.Smith		13	0		4							
Kirkpatrick Farms		48	0		16							
Kirkpatrick Farms West		13	0		3							
Braddock Corner		8	0		2							
Providence Glen		15			4							
Gum Spring Village Center		18			45							
Greenfields Property		48	0		17							
Arcola Center		360			154							
Total Trips (Commuter Peak)	**118**	**602**	**0**	**0**	**270**	**136**	**121**	**0**	**175**	**0**	**0**	**0**
Total Trips (ES Peak)	**112**	**572**	**0**	**0**	**257**	**129**	**115**	**0**	**166**	**0**	**0**	**0**
Total Trips (HS Peak)	**118**	**625**	**0**	**0**	**298**	**136**	**121**	**0**	**175**	**0**	**0**	**0**

2020 FB PM — **Braddock Road and Gum Spring Road**

	NB			SB			EB			WB		
	L	T	R	L	T	R	L	T	R	L	T	R
LCPS MS-5				13				47			58	16
Westport By-Right						58	33	30			53	
Lenah Property						14	7	24			45	
Braddock Crossing						9	5	16			30	
Stoneridge Total Uses	0	54	0	47	61	59	39	0	0	0	0	47
Marrwood Property						1	1	3			6	
C.D.Smith	6					16	9	21	3		41	
Kirkpatrick Farms	64					46	26	64	36		113	
Kirkpatrick Farms West	2					13	7	13	1		24	
Braddock Corner		10		7	5	4	7					14
Providence Glen		4		5	2	3	6					11
Gum Spring Village Center		74		15	74	23	23					15
Greenfields Property	18					57	31	75	10		139	
Arcola Center		98		274	150	75	49					179
Total Trips (Commuter Peak)	**90**	**240**	**0**	**348**	**292**	**378**	**243**	**246**	**50**	**0**	**451**	**266**
Total Trips (ES Peak)	**70**	**187**	**0**	**284**	**227**	**295**	**190**	**239**	**39**	**0**	**410**	**223**
Total Trips (HS Peak)	**78**	**209**	**0**	**302**	**254**	**329**	**211**	**214**	**44**	**0**	**392**	**231**

2020 FB PM — **Braddock Road and Goshen Road**

	NB			SB			EB			WB		
	L	T	R	L	T	R	L	T	R	L	T	R
LCPS MS-5								47			58	
Westport By-Right								76			133	
Lenah Property								43			79	
Braddock Crossing								28			52	
Stoneridge Total Uses	0	0	0	0	0	0	0	48	0	0	57	0
Marrwood Property								7			13	
C.D.Smith								24			12	
Kirkpatrick Farms								52			29	
Kirkpatrick Farms West								19			10	
Braddock Corner								6			3	
Providence Glen								4			2	
Gum Spring Village Center								23			23	
Greenfields Property								70			119	
Arcola Center								49			76	
Total Trips (Commuter Peak)	**0**	**0**	**0**	**0**	**0**	**0**	**0**	**449**	**0**	**0**	**608**	**0**
Total Trips (ES Peak)	**0**	**0**	**0**	**0**	**0**	**0**	**0**	**397**	**0**	**0**	**532**	**0**
Total Trips (HS Peak)	**0**	**0**	**0**	**0**	**0**	**0**	**0**	**391**	**0**	**0**	**529**	**0**

2020 FB PM — **Route 50 and Goshen Road**

	NB			SB			EB			WB		
	L	T	R	L	T	R	L	T	R	L	T	R
LCPS MS-5												
Westport By-Right	14	0	25	0	0	0	0	6	25	14	3	0
Lenah Property								26			48	
Braddock Crossing								17			32	
Stoneridge Total Uses	0	0	0	0	0	0	0	40	0	0	42	0
Marrwood Property	4		7						8	15		
C.D.Smith								1			0	
Kirkpatrick Farms								4			2	
Kirkpatrick Farms West												
Braddock Corner								1			1	
Providence Glen								17			15	
Gum Spring Village Center								35			35	
Greenfields Property								4			7	
Arcola Center								272			415	
Total Trips (Commuter Peak)	**18**	**0**	**32**	**0**	**0**	**0**	**0**	**423**	**33**	**29**	**600**	**0**
Total Trips (ES Peak)	**14**	**0**	**25**	**0**	**0**	**0**	**0**	**330**	**25**	**22**	**468**	**0**
Total Trips (HS Peak)	**15**	**0**	**27**	**0**	**0**	**0**	**0**	**368**	**28**	**25**	**522**	**0**

2020 FB PM — **Braddock Rd and North Star Blvd. (Rel Rt.659)**

	NB			SB			EB			WB		
	L	T	R	L	T	R	L	T	R	L	T	R
LCPS MS-5								47			58	
Westport By-Right	22							63	13		111	
Lenah Property	20							32	11		59	
Braddock Crossing	13							21	7		39	
Stoneridge Total Uses	0	36	7	0	58	3	2	32	0	16	33	0
Marrwood Property	6							4	3		7	
C.D.Smith		10		33	5	12	24					63
Kirkpatrick Farms	10		28					34	18	49	19	
Kirkpatrick Farms West	10		21						19	39		
Braddock Corner			1					6		1	3	
Providence Glen			2					4		1	2	
Gum Spring Village Center								23			23	
Greenfields Property	8		56					59	11	104	111	
Arcola Center								49			76	
Total Trips (Commuter Peak)	**89**	**46**	**115**	**33**	**63**	**15**	**26**	**327**	**82**	**210**	**483**	**63**
Total Trips (ES Peak)	**69**	**35**	**90**	**26**	**49**	**12**	**20**	**302**	**64**	**163**	**435**	**49**
Total Trips (HS Peak)	**77**	**40**	**100**	**29**	**55**	**13**	**23**	**284**	**71**	**182**	**420**	**55**

2020 FB PM — **Gum Spring and Tall Cedars Pkwy**

	NB			SB			EB			WB		
	L	T	R	L	T	R	L	T	R	L	T	R
LCPS MS-5		16			13							
Westport By-Right		33			58							
Lenah Property		7			14							
Braddock Crossing		5			9							
Stoneridge Total Uses	101	0	0	0	0	99	115	0	156	0	0	0
Marrwood Property		1			1							
C.D.Smith		7			14							
Kirkpatrick Farms		26			46							
Kirkpatrick Farms West		7			13							
Braddock Corner		5			9							
Providence Glen		8			18							
Gum Spring Village Center		38			112							
Greenfields Property		31			57							
Arcola Center		326			499							
Total Trips (Commuter Peak)	**101**	**494**	**0**	**0**	**850**	**99**	**115**	**0**	**156**	**0**	**0**	**0**
Total Trips (ES Peak)	**79**	**401**	**0**	**0**	**676**	**77**	**89**	**0**	**121**	**0**	**0**	**0**
Total Trips (HS Peak)	**88**	**430**	**0**	**0**	**740**	**86**	**100**	**0**	**135**	**0**	**0**	**0**

APPENDIX N-1

INTERSECTION CAPACITY ANALYSIS RESULTS– FUTURE CONDITIONS WITH PROPOSED DEVELOPMENT (2020) – HS PEAK, ALTERNATIVE 1

HCM Signalized Intersection Capacity Analysis
100: Route 50 & Goshen Road

LCPS (HS 7)
2020 Total Future

Movement	EBL	EBT	EBR	WBL	WBT	WBR	NBL	NBT	NBR	SBL	SBT	SBR
Lane Configurations												
Volume (vph)	11	1441	56	109	654	14	52	10	80	5	1	0
Ideal Flow (vphpl)	1900	1900	1900	1900	1900	1900	1900	1900	1900	1900	1900	1900
Total Lost time (s)	7.0	7.0	7.0	7.0	7.0	7.0		7.0			7.0	
Lane Util. Factor	1.00	0.95	1.00	1.00	0.95	1.00		1.00			1.00	
Frt	1.00	1.00	0.85	1.00	1.00	0.85		0.92			1.00	
Flt Protected	0.95	1.00	1.00	0.95	1.00	1.00		0.98			0.96	
Satd. Flow (prot)	1770	3505	1583	1770	3343	1583		1691			1788	
Flt Permitted	0.95	1.00	1.00	0.95	1.00	1.00		0.88			0.79	
Satd. Flow (perm)	1770	3505	1583	1770	3343	1583		1509			1468	
Peak-hour factor, PHF	0.92	0.92	0.92	0.92	0.92	0.92	0.92	0.92	0.92	0.92	0.92	0.92
Adj. Flow (vph)	12	1566	61	118	711	15	57	11	87	5	1	0
RTOR Reduction (vph)	0	0	18	0	0	5	0	25	0	0	0	0
Lane Group Flow (vph)	12	1566	43	118	711	10	0	130	0	0	6	0
Heavy Vehicles (%)	2%	3%	2%	2%	8%	2%	2%	2%	2%	2%	2%	2%
Turn Type	Prot		Perm	Prot		Perm	Perm			Perm		
Protected Phases	5	2		1	6			8			4	
Permitted Phases			2			6	8			4		
Actuated Green, G (s)	1.3	65.4	65.4	13.0	77.1	77.1		15.1			15.1	
Effective Green, g (s)	1.3	65.4	65.4	13.0	77.1	77.1		15.1			15.1	
Actuated g/C Ratio	0.01	0.57	0.57	0.11	0.67	0.67		0.13			0.13	
Clearance Time (s)	7.0	7.0	7.0	7.0	7.0	7.0		7.0			7.0	
Vehicle Extension (s)	3.0	3.0	3.0	3.0	3.0	3.0		3.0			3.0	
Lane Grp Cap (vph)	20	2002	904	201	2251	1066		199			194	
v/s Ratio Prot	0.01	c0.45		c0.07	0.21							
v/s Ratio Perm			0.03			0.01		c0.09			0.00	
v/c Ratio	0.60	0.78	0.05	0.59	0.32	0.01		0.65			0.03	
Uniform Delay, d1	56.3	19.0	10.8	48.2	7.8	6.1		47.2			43.3	
Progression Factor	1.00	1.00	1.00	1.00	1.00	1.00		1.00			1.00	
Incremental Delay, d2	40.2	2.1	0.0	4.3	0.1	0.0		7.5			0.1	
Delay (s)	96.5	21.1	10.8	52.5	7.8	6.2		54.7			43.4	
Level of Service	F	C	B	D	A	A		D			D	
Approach Delay (s)		21.3			14.1			54.7			43.4	
Approach LOS		C			B			D			D	

Intersection Summary			
HCM Average Control Delay	21.0	HCM Level of Service	C
HCM Volume to Capacity ratio	0.73		
Actuated Cycle Length (s)	114.5	Sum of lost time (s)	21.0
Intersection Capacity Utilization	71.3%	ICU Level of Service	C
Analysis Period (min)	15		

c Critical Lane Group

HCM Unsignalized Intersection Capacity Analysis
200: Tall Cedars Pkwy & West Spine Road

LCPS (HS 7)
2020 Total Future

Movement	EBL	EBR	NBL	NBT	SBT	SBR
Lane Configurations						
Volume (veh/h)	160	243	162	1388	621	171
Sign Control	Stop			Free	Free	
Grade	0%			0%	0%	
Peak Hour Factor	0.92	0.92	0.92	0.92	0.92	0.92
Hourly flow rate (vph)	174	264	176	1509	675	186
Pedestrians						
Lane Width (ft)						
Walking Speed (ft/s)						
Percent Blockage						
Right turn flare (veh)						
Median type				None	None	
Median storage veh)						
Upstream signal (ft)						
pX, platoon unblocked						
vC, conflicting volume	1782	338	675			
vC1, stage 1 conf vol						
vC2, stage 2 conf vol						
vCu, unblocked vol	1782	338	675			
tC, single (s)	6.8	6.9	4.1			
tC, 2 stage (s)						
tF (s)	3.5	3.3	2.2			
p0 queue free %	0	60	81			
cM capacity (veh/h)	59	658	912			

Direction, Lane #	EB 1	EB 2	NB 1	NB 2	SB 1	SB 2	SB 3
Volume Total	174	264	679	1006	338	338	186
Volume Left	174	0	176	0	0	0	0
Volume Right	0	264	0	0	0	0	186
cSH	59	658	912	1700	1700	1700	1700
Volume to Capacity	2.95	0.40	0.19	0.59	0.20	0.20	0.11
Queue Length 95th (ft)	450	48	18	0	0	0	0
Control Delay (s)	1025.4	14.1	4.6	0.0	0.0	0.0	0.0
Lane LOS	F	B	A				
Approach Delay (s)	415.6		1.8		0.0		
Approach LOS	F						

Intersection Summary			
Average Delay	62.1		
Intersection Capacity Utilization	79.1%	ICU Level of Service	D
Analysis Period (min)	15		

HCM Signalized Intersection Capacity Analysis
300: Braddock Road & Gum Spring Road

LCPS (HS 7)
2020 Total Future

Movement	EBL	EBT	EBR	WBL	WBT	WBR	NBL	NBT	NBR	SBL	SBT	SBR
Lane Configurations												
Volume (vph)	399	856	126	102	393	499	69	491	132	463	325	203
Ideal Flow (vphpl)	1900	1900	1900	1900	1900	1900	1900	1900	1900	1900	1900	1900
Total Lost time (s)	7.0	7.0	7.0	7.0	7.0	7.0	7.0	7.0		7.0	7.0	7.0
Lane Util. Factor	1.00	1.00	1.00	1.00	1.00	1.00	1.00	0.95		1.00	0.95	1.00
Frt	1.00	1.00	0.85	1.00	1.00	0.85	1.00	0.97		1.00	1.00	0.85
Flt Protected	0.95	1.00	1.00	0.95	1.00	1.00	0.95	1.00		0.95	1.00	1.00
Satd. Flow (prot)	1770	1863	1583	1770	1863	1583	1770	3427		1770	3539	1583
Flt Permitted	0.32	1.00	1.00	0.10	1.00	1.00	0.54	1.00		0.15	1.00	1.00
Satd. Flow (perm)	605	1863	1583	182	1863	1583	1007	3427		287	3539	1583
Peak-hour factor, PHF	0.92	0.92	0.92	0.92	0.92	0.92	0.92	0.92	0.92	0.92	0.92	0.92
Adj. Flow (vph)	434	930	137	111	427	542	75	534	143	503	353	221
RTOR Reduction (vph)	0	0	70	0	0	9	0	22	0	0	0	147
Lane Group Flow (vph)	434	930	67	111	427	533	75	655	0	503	353	74
Turn Type	pm+pt		pm+ov	pm+pt		pm+ov	pm+pt			pm+pt		pm+ov
Protected Phases	7	4	5	3	8	1	5	2		1	6	7
Permitted Phases	4		4	8		8	2			6		6
Actuated Green, G (s)	47.0	42.0	46.0	45.0	41.0	58.0	23.0	19.0		43.0	32.0	37.0
Effective Green, g (s)	47.0	42.0	46.0	45.0	41.0	58.0	23.0	19.0		43.0	32.0	37.0
Actuated g/C Ratio	0.43	0.38	0.42	0.41	0.37	0.53	0.21	0.17		0.39	0.29	0.34
Clearance Time (s)	7.0	7.0	7.0	7.0	7.0	7.0	7.0	7.0		7.0	7.0	7.0
Vehicle Extension (s)	3.0	3.0	3.0	3.0	3.0	3.0	3.0	3.0		3.0	3.0	3.0
Lane Grp Cap (vph)	311	711	763	132	694	935	238	592		341	1030	633
v/s Ratio Prot	c0.06	0.50	0.00	0.03	0.23	0.09	0.01	0.19		c0.23	0.10	0.01
v/s Ratio Perm	c0.53		0.04	0.31		0.25	0.05			c0.35		0.04
v/c Ratio	1.40	1.31	0.09	0.84	0.62	0.57	0.32	1.11		1.48	0.34	0.12
Uniform Delay, d1	33.6	34.0	19.3	29.0	28.1	17.6	35.9	45.5		31.1	30.7	25.2
Progression Factor	1.00	1.00	1.00	1.00	1.00	1.00	1.00	1.00		1.00	1.00	1.00
Incremental Delay, d2	196.5	148.6	0.0	35.8	1.6	0.8	0.8	69.4		229.1	0.2	0.1
Delay (s)	230.1	182.6	19.4	64.7	29.7	18.4	36.7	114.9		260.2	30.9	25.3
Level of Service	F	F	B	E	C	B	D	F		F	C	C
Approach Delay (s)		181.5			27.6			107.1			136.8	
Approach LOS		F			C			F			F	

Intersection Summary			
HCM Average Control Delay	120.2	HCM Level of Service	F
HCM Volume to Capacity ratio	1.28		
Actuated Cycle Length (s)	110.0	Sum of lost time (s)	14.0
Intersection Capacity Utilization	117.5%	ICU Level of Service	H
Analysis Period (min)	15		
c Critical Lane Group			

HCM Unsignalized Intersection Capacity Analysis
600: Road A & North Star Blvd.

LCPS (HS 7)
2020 Total Future

Movement	EBL	EBR	NBL	NBT	SBT	SBR
Lane Configurations						
Sign Control	Stop			Stop	Stop	
Volume (vph)	10	13	27	155	193	21
Peak Hour Factor	0.92	0.92	0.92	0.92	0.92	0.92
Hourly flow rate (vph)	11	14	29	168	210	23

Direction, Lane #	EB 1	EB 2	NB 1	NB 2	SB 1	SB 2
Volume Total (vph)	11	14	29	168	210	23
Volume Left (vph)	11	0	29	0	0	0
Volume Right (vph)	0	14	0	0	0	23
Hadj (s)	1.09	0.22	2.20	0.03	0.03	0.13
Departure Headway (s)	6.6	5.7	7.0	4.8	4.8	4.9
Degree Utilization, x	0.02	0.02	0.06	0.22	0.28	0.03
Capacity (veh/h)	508	584	508	739	739	723
Control Delay (s)	8.5	7.6	9.2	8.0	8.4	6.8
Approach Delay (s)	8.0		8.1		8.2	
Approach LOS	A		A		A	

Intersection Summary			
Delay	8.2		
HCM Level of Service	A		
Intersection Capacity Utilization	26.8%	ICU Level of Service	A
Analysis Period (min)	15		

Movement	EBL	EBR	NBL	NBT	SBT	SBR
Lane Configurations						
Sign Control	Stop			Stop	Stop	
Volume (vph)	62	113	241	120	73	133
Peak Hour Factor	0.92	0.92	0.92	0.92	0.92	0.92
Hourly flow rate (vph)	67	123	262	130	79	145

Direction, Lane #	EB 1	EB 2	NB 1	NB 2	SB 1	SB 2
Volume Total (vph)	67	123	262	130	79	145
Volume Left (vph)	67	0	262	0	0	0
Volume Right (vph)	0	123	0	0	0	145
Hadj (s)	0.53	-0.67	0.53	0.41	0.17	-0.67
Departure Headway (s)	6.5	5.3	5.8	5.7	5.7	4.8
Degree Utilization, x	0.12	0.18	0.42	0.21	0.13	0.19
Capacity (veh/h)	514	626	602	610	603	708
Control Delay (s)	9.2	8.3	11.8	9.0	8.3	7.8
Approach Delay (s)	8.6		10.9		8.0	
Approach LOS	A		B		A	

Intersection Summary			
Delay	9.5		
HCM Level of Service	A		
Intersection Capacity Utilization	30.1%	ICU Level of Service	A
Analysis Period (min)	15		

Movement	EBL	EBT	EBR	WBL	WBT	WBR	NBL	NBT	NBR	SBL	SBT	SBR
Lane Configurations												
Volume (veh/h)	91	539	69	67	312	224	65	49	192	156	41	58
Sign Control		Free			Free			Stop			Stop	
Grade		0%			0%			0%			0%	
Peak Hour Factor	0.92	0.92	0.92	0.92	0.92	0.92	0.92	0.92	0.92	0.92	0.92	0.92
Hourly flow rate (vph)	99	586	75	73	339	243	71	53	209	170	45	63
Pedestrians												
Lane Width (ft)												
Walking Speed (ft/s)												
Percent Blockage												
Right turn flare (veh)									12			12
Median type		None			None							
Median storage veh)												
Upstream signal (ft)												
pX, platoon unblocked												
vC, conflicting volume	583			661			1322	1512	586	1399	1343	339
vC1, stage 1 conf vol												
vC2, stage 2 conf vol												
vCu, unblocked vol	583			661			1322	1512	586	1399	1343	339
tC, single (s)	4.4			4.1			7.1	6.5	6.2	7.1	6.5	6.3
tC, 2 stage (s)												
tF (s)	2.5			2.2			3.5	4.0	3.3	3.5	4.0	3.4
p0 queue free %	89			92			7	46	59	0	64	91
cM capacity (veh/h)	876			927			76	98	510	35	124	685

Direction, Lane #	EB 1	EB 2	EB 3	WB 1	WB 2	WB 3	NB 1	NB 2	SB 1	SB 2
Volume Total	99	586	75	73	339	243	71	262	170	108
Volume Left	99	0	0	73	0	0	71	0	170	0
Volume Right	0	0	75	0	0	243	0	209	0	63
cSH	876	1700	1700	927	1700	1700	76	482	35	300
Volume to Capacity	0.11	0.34	0.04	0.08	0.20	0.14	0.93	0.54	4.88	0.36
Queue Length 95th (ft)	10	0	0	6	0	0	121	80	Err	39
Control Delay (s)	9.6	0.0	0.0	9.2	0.0	0.0	179.1	29.4	Err	26.8
Lane LOS	A			A			F	D	F	D
Approach Delay (s)	1.3			1.0			61.2		6127.4	
Approach LOS							F		F	

Intersection Summary			
Average Delay	849.6		
Intersection Capacity Utilization	58.9%	ICU Level of Service	B
Analysis Period (min)	15		

HCM Signalized Intersection Capacity Analysis
100: Route 50 & Goshen Road

LCPS (HS 7)
2020 Total Future

Movement	EBL	EBT	EBR	WBL	WBT	WBR	NBL	NBT	NBR	SBL	SBT	SBR
Lane Configurations												
Volume (vph)	1	706	45	61	1806	5	40	1	82	1	9	5
Ideal Flow (vphpl)	1900	1900	1900	1900	1900	1900	1900	1900	1900	1900	1900	1900
Total Lost time (s)	7.0	7.0	7.0	7.0	7.0	7.0		7.0			7.0	
Lane Util. Factor	1.00	0.95	1.00	1.00	0.95	1.00		1.00			1.00	
Frt	1.00	1.00	0.85	1.00	1.00	0.85		0.91			0.96	
Flt Protected	0.95	1.00	1.00	0.95	1.00	1.00		0.98			1.00	
Satd. Flow (prot)	1770	3505	1583	1770	3343	1583		1662			1779	
Flt Permitted	0.95	1.00	1.00	0.95	1.00	1.00		0.89			0.98	
Satd. Flow (perm)	1770	3505	1583	1770	3343	1583		1496			1747	
Peak-hour factor, PHF	0.92	0.92	0.92	0.92	0.92	0.92	0.92	0.92	0.92	0.92	0.92	0.92
Adj. Flow (vph)	1	767	49	66	1963	5	43	1	89	1	10	5
RTOR Reduction (vph)	0	0	20	0	0	1	0	40	0	0	4	0
Lane Group Flow (vph)	1	767	29	66	1963	4	0	93	0	0	12	0
Heavy Vehicles (%)	2%	3%	2%	2%	8%	2%	3%	2%	2%	2%	2%	2%
Turn Type	Prot		Perm	Prot		Perm	Perm			Perm		
Protected Phases	5	2		1	6			8			4	
Permitted Phases			2			6	8			4		
Actuated Green, G (s)	0.7	62.8	62.8	8.8	70.9	70.9		13.9			13.9	
Effective Green, g (s)	0.7	62.8	62.8	8.8	70.9	70.9		13.9			13.9	
Actuated g/C Ratio	0.01	0.59	0.59	0.08	0.67	0.67		0.13			0.13	
Clearance Time (s)	7.0	7.0	7.0	7.0	7.0	7.0		7.0			7.0	
Vehicle Extension (s)	3.0	3.0	3.0	3.0	3.0	3.0		3.0			3.0	
Lane Grp Cap (vph)	12	2067	933	146	2226	1054		195			228	
v/s Ratio Prot	0.00	0.22		c0.04	c0.59							
v/s Ratio Perm			0.02			0.00		c0.06			0.01	
v/c Ratio	0.08	0.37	0.03	0.45	0.88	0.00		0.48			0.05	
Uniform Delay, d1	52.6	11.5	9.1	46.6	14.4	6.0		42.9			40.5	
Progression Factor	1.00	1.00	1.00	1.00	1.00	1.00		1.00			1.00	
Incremental Delay, d2	3.0	0.1	0.0	2.2	4.5	0.0		1.8			0.1	
Delay (s)	55.6	11.6	9.1	48.8	18.9	6.0		44.8			40.6	
Level of Service	E	B	A	D	B	A		D			D	
Approach Delay (s)		11.5			19.8			44.8			40.6	
Approach LOS		B			B			D			D	

Intersection Summary			
HCM Average Control Delay	18.8	HCM Level of Service	B
HCM Volume to Capacity ratio	0.84		
Actuated Cycle Length (s)	106.5	Sum of lost time (s)	21.0
Intersection Capacity Utilization	76.3%	ICU Level of Service	D
Analysis Period (min)	15		

c Critical Lane Group

HCM Unsignalized Intersection Capacity Analysis
200: Tall Cedars Pkwy & West Spine Road

LCPS (HS 7)
2020 Total Future

Movement	EBL	EBR	NBL	NBT	SBT	SBR
Lane Configurations						
Volume (veh/h)	133	210	151	789	1382	150
Sign Control	Stop			Free	Free	
Grade	0%			0%	0%	
Peak Hour Factor	0.92	0.92	0.92	0.92	0.92	0.92
Hourly flow rate (vph)	145	228	164	858	1502	163
Pedestrians						
Lane Width (ft)						
Walking Speed (ft/s)						
Percent Blockage						
Right turn flare (veh)						
Median type				None	None	
Median storage veh)						
Upstream signal (ft)						
pX, platoon unblocked						
vC, conflicting volume	2259	751	1502			
vC1, stage 1 conf vol						
vC2, stage 2 conf vol						
vCu, unblocked vol	2259	751	1502			
tC, single (s)	6.8	6.9	4.1			
tC, 2 stage (s)						
tF (s)	3.5	3.3	2.2			
p0 queue free %	0	35	63			
cM capacity (veh/h)	22	353	442			

Direction, Lane #	EB 1	EB 2	NB 1	NB 2	SB 1	SB 2	SB 3
Volume Total	145	228	450	572	751	751	163
Volume Left	145	0	164	0	0	0	0
Volume Right	0	228	0	0	0	0	163
cSH	22	353	442	1700	1700	1700	1700
Volume to Capacity	6.63	0.65	0.37	0.34	0.44	0.44	0.10
Queue Length 95th (ft)	Err	107	42	0	0	0	0
Control Delay (s)	Err	32.0	11.6	0.0	0.0	0.0	0.0
Lane LOS	F	D	B				
Approach Delay (s)	3896.8		5.1		0.0		
Approach LOS	F						

Intersection Summary			
Average Delay	476.5		
Intersection Capacity Utilization	81.8%	ICU Level of Service	D
Analysis Period (min)	15		

HCM Signalized Intersection Capacity Analysis
300: Braddock Road & Gum Spring Road

LCPS (HS 7)
2020 Total Future

Movement	EBL	EBT	EBR	WBL	WBT	WBR	NBL	NBT	NBR	SBL	SBT	SBR
Lane Configurations												
Volume (vph)	291	363	98	159	527	329	109	361	72	377	574	351
Ideal Flow (vphpl)	1900	1900	1900	1900	1900	1900	1900	1900	1900	1900	1900	1900
Total Lost time (s)	7.0	7.0	7.0	7.0	7.0	7.0	7.0	7.0		7.0	7.0	7.0
Lane Util. Factor	1.00	1.00	1.00	1.00	1.00	1.00	1.00	0.95		1.00	0.95	1.00
Frt	1.00	1.00	0.85	1.00	1.00	0.85	1.00	0.98		1.00	1.00	0.85
Flt Protected	0.95	1.00	1.00	0.95	1.00	1.00	0.95	1.00		0.95	1.00	1.00
Satd. Flow (prot)	1770	1863	1583	1770	1863	1583	1770	3451		1770	3539	1583
Flt Permitted	0.10	1.00	1.00	0.45	1.00	1.00	0.25	1.00		0.26	1.00	1.00
Satd. Flow (perm)	184	1863	1583	830	1863	1583	470	3451		479	3539	1583
Peak-hour factor, PHF	0.92	0.92	0.92	0.92	0.92	0.92	0.92	0.92	0.92	0.92	0.92	0.92
Adj. Flow (vph)	316	395	107	173	573	358	118	392	78	410	624	382
RTOR Reduction (vph)	0	0	62	0	0	59	0	16	0	0	0	68
Lane Group Flow (vph)	316	395	45	173	573	299	118	454	0	410	624	314
Turn Type	pm+pt		pm+ov	pm+pt		pm+ov	pm+pt			pm+pt		pm+ov
Protected Phases	7	4	5	3	8	1	5	2		1	6	7
Permitted Phases	4		4	8		8	2			6		6
Actuated Green, G (s)	57.4	40.4	44.4	45.0	34.2	42.2	23.3	19.3		31.3	23.3	40.3
Effective Green, g (s)	57.4	40.4	44.4	45.0	34.2	42.2	23.3	19.3		31.3	23.3	40.3
Actuated g/C Ratio	0.54	0.38	0.42	0.42	0.32	0.40	0.22	0.18		0.29	0.22	0.38
Clearance Time (s)	7.0	7.0	7.0	7.0	7.0	7.0	7.0	7.0		7.0	7.0	7.0
Vehicle Extension (s)	3.0	3.0	3.0	3.0	3.0	3.0	3.0	3.0		3.0	3.0	3.0
Lane Grp Cap (vph)	352	707	764	446	598	731	152	625		238	774	703
v/s Ratio Prot	c0.14	c0.21	0.00	0.04	0.31	0.03	0.03	0.13		c0.13	0.18	0.07
v/s Ratio Perm	c0.34		0.03	0.12		0.16	0.14			c0.38		0.13
v/c Ratio	0.90	0.56	0.06	0.39	0.96	0.41	0.78	0.73		1.72	0.81	0.45
Uniform Delay, d1	30.3	26.0	18.6	19.8	35.4	23.2	37.8	41.1		35.3	39.5	24.8
Progression Factor	1.00	1.00	1.00	1.00	1.00	1.00	1.00	1.00		1.00	1.00	1.00
Incremental Delay, d2	24.2	1.0	0.0	0.6	26.4	0.4	21.6	4.2		342.3	6.1	0.5
Delay (s)	54.6	27.0	18.6	20.4	61.9	23.5	59.4	45.3		377.6	45.6	25.2
Level of Service	D	C	B	C	E	C	E	D		F	D	C
Approach Delay (s)		36.5			42.9			48.2			136.2	
Approach LOS		D			D			D			F	

Intersection Summary			
HCM Average Control Delay	76.0	HCM Level of Service	E
HCM Volume to Capacity ratio	1.31		
Actuated Cycle Length (s)	106.5	Sum of lost time (s)	28.0
Intersection Capacity Utilization	100.4%	ICU Level of Service	G
Analysis Period (min)	15		
c Critical Lane Group			

HCM Unsignalized Intersection Capacity Analysis
600: Road A & North Star Blvd.

LCPS (HS 7)
2020 Total Future

Movement	EBL	EBR	NBL	NBT	SBT	SBR
Lane Configurations						
Sign Control	Stop			Stop	Stop	
Volume (vph)	14	24	16	160	163	7
Peak Hour Factor	0.92	0.92	0.92	0.92	0.92	0.92
Hourly flow rate (vph)	15	26	17	174	177	8

Direction, Lane #	EB 1	EB 2	NB 1	NB 2	SB 1	SB 2
Volume Total (vph)	15	26	17	174	177	8
Volume Left (vph)	15	0	17	0	0	0
Volume Right (vph)	0	26	0	0	0	8
Hadj (s)	1.74	1.00	2.20	0.03	0.03	0.15
Departure Headway (s)	7.1	6.4	7.0	4.8	4.8	4.9
Degree Utilization, x	0.03	0.05	0.03	0.23	0.24	0.01
Capacity (veh/h)	475	530	504	732	728	709
Control Delay (s)	9.1	8.5	9.0	8.1	8.1	6.8
Approach Delay (s)	8.7		8.2		8.1	
Approach LOS	A		A		A	

Intersection Summary			
Delay	8.2		
HCM Level of Service	A		
Intersection Capacity Utilization	23.3%	ICU Level of Service	A
Analysis Period (min)	15		

Movement	EBL	EBR	NBL	NBT	SBT	SBR
Lane Configurations						
Sign Control	Stop			Stop	Stop	
Volume (vph)	98	195	107	79	136	51
Peak Hour Factor	0.92	0.92	0.92	0.92	0.92	0.92
Hourly flow rate (vph)	107	212	116	86	148	55

Direction, Lane #	EB 1	EB 2	NB 1	NB 2	SB 1	SB 2
Volume Total (vph)	107	212	116	86	148	55
Volume Left (vph)	107	0	116	0	0	0
Volume Right (vph)	0	212	0	0	0	55
Hadj (s)	0.53	-0.67	0.53	0.15	0.36	-0.67
Departure Headway (s)	6.1	4.9	6.1	5.7	6.0	4.9
Degree Utilization, x	0.18	0.29	0.20	0.14	0.24	0.08
Capacity (veh/h)	559	695	560	594	574	686
Control Delay (s)	9.2	8.7	9.4	8.5	9.7	7.1
Approach Delay (s)	8.9		9.0		9.0	
Approach LOS	A		A		A	

Intersection Summary			
Delay	8.9		
HCM Level of Service	A		
Intersection Capacity Utilization	28.5%	ICU Level of Service	A
Analysis Period (min)	15		

Movement	EBL	EBT	EBR	WBL	WBT	WBR	NBL	NBT	NBR	SBL	SBT	SBR
Lane Configurations												
Volume (veh/h)	74	299	71	182	454	124	77	40	100	169	55	100
Sign Control		Free			Free			Stop			Stop	
Grade		0%			0%			0%			0%	
Peak Hour Factor	0.92	0.92	0.92	0.92	0.92	0.92	0.92	0.92	0.92	0.92	0.92	0.92
Hourly flow rate (vph)	80	325	77	198	493	135	84	43	109	184	60	109
Pedestrians												
Lane Width (ft)												
Walking Speed (ft/s)												
Percent Blockage												
Right turn flare (veh)									12			12
Median type		None			None							
Median storage veh)												
Upstream signal (ft)												
pX, platoon unblocked												
vC, conflicting volume	628			402			1459	1510	325	1451	1452	493
vC1, stage 1 conf vol												
vC2, stage 2 conf vol												
vCu, unblocked vol	628			402			1459	1510	325	1451	1452	493
tC, single (s)	4.2			4.1			7.1	6.5	6.2	7.1	6.5	6.3
tC, 2 stage (s)												
tF (s)	2.3			2.2			3.5	4.0	3.3	3.5	4.0	3.4
p0 queue free %	91			83			0	52	85	0	39	81
cM capacity (veh/h)	925			1156			37	91	716	48	99	568

Direction, Lane #	EB 1	EB 2	EB 3	WB 1	WB 2	WB 3	NB 1	NB 2	SB 1	SB 2
Volume Total	80	325	77	198	493	135	84	152	184	168
Volume Left	80	0	0	198	0	0	84	0	184	0
Volume Right	0	0	77	0	0	135	0	109	0	109
cSH	925	1700	1700	1156	1700	1700	37	319	48	278
Volume to Capacity	0.09	0.19	0.05	0.17	0.29	0.08	2.24	0.48	3.85	0.61
Queue Length 95th (ft)	7	0	0	15	0	0	230	61	Err	91
Control Delay (s)	9.3	0.0	0.0	8.8	0.0	0.0	797.9	29.6	Err	38.8
Lane LOS	A			A			F	D	F	E
Approach Delay (s)	1.5			2.1			302.2		5234.1	
Approach LOS							F		F	

Intersection Summary			
Average Delay	1010.7		
Intersection Capacity Utilization	54.0%	ICU Level of Service	A
Analysis Period (min)	15		

Movement	EBL	EBT	EBR	WBL	WBT	WBR	NBL	NBT	NBR	SBL	SBT	SBR
Lane Configurations												
Volume (vph)	11	1441	56	109	654	14	52	10	80	5	1	0
Ideal Flow (vphpl)	1900	1900	1900	1900	1900	1900	1900	1900	1900	1900	1900	1900
Total Lost time (s)	7.0	7.0	7.0	7.0	7.0	7.0		7.0			7.0	
Lane Util. Factor	1.00	0.95	1.00	1.00	0.95	1.00		1.00			1.00	
Frt	1.00	1.00	0.85	1.00	1.00	0.85		0.92			1.00	
Flt Protected	0.95	1.00	1.00	0.95	1.00	1.00		0.98			0.96	
Satd. Flow (prot)	1770	3505	1583	1770	3343	1583		1691			1788	
Flt Permitted	0.95	1.00	1.00	0.95	1.00	1.00		0.88			0.79	
Satd. Flow (perm)	1770	3505	1583	1770	3343	1583		1509			1468	
Peak-hour factor, PHF	0.92	0.92	0.92	0.92	0.92	0.92	0.92	0.92	0.92	0.92	0.92	0.92
Adj. Flow (vph)	12	1566	61	118	711	15	57	11	87	5	1	0
RTOR Reduction (vph)	0	0	18	0	0	5	0	25	0	0	0	0
Lane Group Flow (vph)	12	1566	43	118	711	10	0	130	0	0	6	0
Heavy Vehicles (%)	2%	3%	2%	2%	8%	2%	2%	2%	2%	2%	2%	2%
Turn Type	Prot		Perm	Prot		Perm	Perm			Perm		
Protected Phases	5	2		1	6			8			4	
Permitted Phases			2			6	8			4		
Actuated Green, G (s)	1.3	65.4	65.4	13.0	77.1	77.1		15.1			15.1	
Effective Green, g (s)	1.3	65.4	65.4	13.0	77.1	77.1		15.1			15.1	
Actuated g/C Ratio	0.01	0.57	0.57	0.11	0.67	0.67		0.13			0.13	
Clearance Time (s)	7.0	7.0	7.0	7.0	7.0	7.0		7.0			7.0	
Vehicle Extension (s)	3.0	3.0	3.0	3.0	3.0	3.0		3.0			3.0	
Lane Grp Cap (vph)	20	2002	904	201	2251	1066		199			194	
v/s Ratio Prot	0.01	c0.45		c0.07	0.21							
v/s Ratio Perm			0.03			0.01		c0.09			0.00	
v/c Ratio	0.60	0.78	0.05	0.59	0.32	0.01		0.65			0.03	
Uniform Delay, d1	56.3	19.0	10.8	48.2	7.8	6.1		47.2			43.3	
Progression Factor	1.00	1.00	1.00	1.00	1.00	1.00		1.00			1.00	
Incremental Delay, d2	40.2	2.1	0.0	4.3	0.1	0.0		7.5			0.1	
Delay (s)	96.5	21.1	10.8	52.5	7.8	6.2		54.7			43.4	
Level of Service	F	C	B	D	A	A		D			D	
Approach Delay (s)		21.3			14.1			54.7			43.4	
Approach LOS		C			B			D			D	

Intersection Summary			
HCM Average Control Delay	21.0	HCM Level of Service	C
HCM Volume to Capacity ratio	0.73		
Actuated Cycle Length (s)	114.5	Sum of lost time (s)	21.0
Intersection Capacity Utilization	71.3%	ICU Level of Service	C
Analysis Period (min)	15		

c Critical Lane Group

Movement	EBL	EBR	NBL	NBT	SBT	SBR
Lane Configurations						
Volume (vph)	160	243	162	1388	621	171
Ideal Flow (vphpl)	1900	1900	1900	1900	1900	1900
Total Lost time (s)	7.0	7.0		7.0	7.0	7.0
Lane Util. Factor	1.00	1.00		0.95	0.95	1.00
Frt	1.00	0.85		1.00	1.00	0.85
Flt Protected	0.95	1.00		0.99	1.00	1.00
Satd. Flow (prot)	1770	1583		3521	3539	1583
Flt Permitted	0.95	1.00		0.76	1.00	1.00
Satd. Flow (perm)	1770	1583		2683	3539	1583
Peak-hour factor, PHF	0.92	0.92	0.92	0.92	0.92	0.92
Adj. Flow (vph)	174	264	176	1509	675	186
RTOR Reduction (vph)	0	223	0	0	0	56
Lane Group Flow (vph)	174	41	0	1685	675	130
Turn Type		Perm	Perm			Perm
Protected Phases	4			2	6	
Permitted Phases		4	2			6
Actuated Green, G (s)	14.9	14.9		66.4	66.4	66.4
Effective Green, g (s)	14.9	14.9		66.4	66.4	66.4
Actuated g/C Ratio	0.16	0.16		0.70	0.70	0.70
Clearance Time (s)	7.0	7.0		7.0	7.0	7.0
Vehicle Extension (s)	3.0	3.0		3.0	3.0	3.0
Lane Grp Cap (vph)	277	247		1869	2466	1103
v/s Ratio Prot	c0.10				0.19	
v/s Ratio Perm		0.03		c0.63		0.08
v/c Ratio	0.63	0.17		0.90	0.27	0.12
Uniform Delay, d1	37.6	34.8		11.8	5.4	4.8
Progression Factor	1.00	1.00		1.00	1.00	1.00
Incremental Delay, d2	4.4	0.3		6.5	0.1	0.0
Delay (s)	42.0	35.1		18.2	5.5	4.8
Level of Service	D	D		B	A	A
Approach Delay (s)	37.9			18.2	5.3	
Approach LOS	D			B	A	

Intersection Summary			
HCM Average Control Delay	17.4	HCM Level of Service	B
HCM Volume to Capacity ratio	0.85		
Actuated Cycle Length (s)	95.3	Sum of lost time (s)	14.0
Intersection Capacity Utilization	86.6%	ICU Level of Service	E
Analysis Period (min)	15		

c Critical Lane Group

HCM Signalized Intersection Capacity Analysis
300: Braddock Road & Gum Spring Road

LCPS (HS 7)
2020 Total Future

Movement	EBL	EBT	EBR	WBL	WBT	WBR	NBL	NBT	NBR	SBL	SBT	SBR
Lane Configurations												
Volume (vph)	399	856	126	102	393	499	69	491	132	463	325	203
Ideal Flow (vphpl)	1900	1900	1900	1900	1900	1900	1900	1900	1900	1900	1900	1900
Total Lost time (s)	7.0	7.0	7.0	7.0	7.0	7.0	7.0	7.0	7.0	7.0	7.0	7.0
Lane Util. Factor	0.97	0.95	1.00	1.00	0.95	1.00	1.00	0.95	1.00	1.00	0.95	1.00
Frt	1.00	1.00	0.85	1.00	1.00	0.85	1.00	1.00	0.85	1.00	1.00	0.85
Flt Protected	0.95	1.00	1.00	0.95	1.00	1.00	0.95	1.00	1.00	0.95	1.00	1.00
Satd. Flow (prot)	3433	3539	1583	1770	3539	1583	1770	3539	1583	1770	3539	1583
Flt Permitted	0.95	1.00	1.00	0.21	1.00	1.00	0.54	1.00	1.00	0.16	1.00	1.00
Satd. Flow (perm)	3433	3539	1583	396	3539	1583	1007	3539	1583	295	3539	1583
Peak-hour factor, PHF	0.92	0.92	0.92	0.92	0.92	0.92	0.92	0.92	0.92	0.92	0.92	0.92
Adj. Flow (vph)	434	930	137	111	427	542	75	534	143	503	353	221
RTOR Reduction (vph)	0	0	91	0	0	16	0	0	36	0	0	70
Lane Group Flow (vph)	434	930	46	111	427	526	75	534	107	503	353	151
Turn Type	Prot		pm+ov	pm+pt		pm+ov	pm+pt		pm+ov	pm+pt		pm+ov
Protected Phases	7	4	5	3	8	1	5	2	3	1	6	7
Permitted Phases			4	8		8	2		2	6		6
Actuated Green, G (s)	17.9	31.7	36.7	23.8	18.8	43.8	23.5	18.5	23.5	50.5	38.5	56.4
Effective Green, g (s)	17.9	31.7	36.7	23.8	18.8	43.8	23.5	18.5	23.5	50.5	38.5	56.4
Actuated g/C Ratio	0.17	0.29	0.34	0.22	0.17	0.40	0.22	0.17	0.22	0.47	0.36	0.52
Clearance Time (s)	7.0	7.0	7.0	7.0	7.0	7.0	7.0	7.0	7.0	7.0	7.0	7.0
Vehicle Extension (s)	3.0	3.0	3.0	3.0	3.0	3.0	3.0	3.0	3.0	3.0	3.0	3.0
Lane Grp Cap (vph)	568	1037	639	151	615	743	254	605	446	478	1259	928
v/s Ratio Prot	c0.13	c0.26	0.00	0.03	0.12	0.16	0.01	0.15	0.01	c0.24	0.10	0.03
v/s Ratio Perm			0.03	0.13		0.17	0.05		0.06	c0.25		0.07
v/c Ratio	0.76	0.90	0.07	0.74	0.69	0.71	0.30	0.88	0.24	1.05	0.28	0.16
Uniform Delay, d1	43.1	36.7	24.2	36.5	42.0	26.9	34.6	43.8	35.0	30.7	24.9	13.5
Progression Factor	1.00	1.00	1.00	1.00	1.00	1.00	1.00	1.00	1.00	1.00	1.00	1.00
Incremental Delay, d2	6.1	10.2	0.0	16.9	3.4	3.1	0.7	14.2	0.3	55.6	0.1	0.1
Delay (s)	49.2	46.9	24.3	53.4	45.4	30.0	35.3	58.0	35.3	86.3	25.1	13.6
Level of Service	D	D	C	D	D	C	D	E	D	F	C	B
Approach Delay (s)		45.5			38.5			51.4			51.3	
Approach LOS		D			D			D			D	

Intersection Summary			
HCM Average Control Delay	46.2	HCM Level of Service	D
HCM Volume to Capacity ratio	0.97		
Actuated Cycle Length (s)	108.2	Sum of lost time (s)	21.0
Intersection Capacity Utilization	91.9%	ICU Level of Service	F
Analysis Period (min)	15		
c Critical Lane Group			

HCM Unsignalized Intersection Capacity Analysis
600: Road A & North Star Blvd.

LCPS (HS 7)
2020 Total Future

Movement	EBL	EBR	NBL	NBT	SBT	SBR
Lane Configurations						
Sign Control	Stop			Stop	Stop	
Volume (vph)	10	13	27	155	193	21
Peak Hour Factor	0.92	0.92	0.92	0.92	0.92	0.92
Hourly flow rate (vph)	11	14	29	168	210	23

Direction, Lane #	EB 1	EB 2	NB 1	NB 2	SB 1	SB 2
Volume Total (vph)	11	14	29	168	210	23
Volume Left (vph)	11	0	29	0	0	0
Volume Right (vph)	0	14	0	0	0	23
Hadj (s)	1.09	0.22	2.20	0.03	0.03	0.13
Departure Headway (s)	6.6	5.7	7.0	4.8	4.8	4.9
Degree Utilization, x	0.02	0.02	0.06	0.22	0.28	0.03
Capacity (veh/h)	508	584	508	739	739	723
Control Delay (s)	8.5	7.6	9.2	8.0	8.4	6.8
Approach Delay (s)	8.0		8.1		8.2	
Approach LOS	A		A		A	

Intersection Summary			
Delay	8.2		
HCM Level of Service	A		
Intersection Capacity Utilization	26.8%	ICU Level of Service	A
Analysis Period (min)	15		

Movement	EBL	EBR	NBL	NBT	SBT	SBR
Lane Configurations						
Sign Control	Stop			Stop	Stop	
Volume (vph)	62	113	241	120	73	133
Peak Hour Factor	0.92	0.92	0.92	0.92	0.92	0.92
Hourly flow rate (vph)	67	123	262	130	79	145

Direction, Lane #	EB 1	EB 2	NB 1	NB 2	SB 1	SB 2
Volume Total (vph)	67	123	262	130	79	145
Volume Left (vph)	67	0	262	0	0	0
Volume Right (vph)	0	123	0	0	0	145
Hadj (s)	0.53	-0.67	0.53	0.41	0.17	-0.67
Departure Headway (s)	6.5	5.3	5.8	5.7	5.7	4.8
Degree Utilization, x	0.12	0.18	0.42	0.21	0.13	0.19
Capacity (veh/h)	514	626	602	610	603	708
Control Delay (s)	9.2	8.3	11.8	9.0	8.3	7.8
Approach Delay (s)	8.6		10.9		8.0	
Approach LOS	A		B		A	

Intersection Summary			
Delay	9.5		
HCM Level of Service	A		
Intersection Capacity Utilization	30.1%	ICU Level of Service	A
Analysis Period (min)	15		

Movement	EBL	EBT	EBR	WBL	WBT	WBR	NBL	NBT	NBR	SBL	SBT	SBR
Lane Configurations												
Volume (vph)	91	539	69	67	312	224	65	49	192	156	41	58
Ideal Flow (vphpl)	1900	1900	1900	1900	1900	1900	1900	1900	1900	1900	1900	1900
Total Lost time (s)	7.0	7.0	7.0	7.0	7.0	7.0	7.0	7.0	7.0	7.0	7.0	7.0
Lane Util. Factor	1.00	1.00	1.00	1.00	1.00	1.00	1.00	1.00	1.00	1.00	1.00	1.00
Frt	1.00	1.00	0.85	1.00	1.00	0.85	1.00	1.00	0.85	1.00	1.00	0.85
Flt Protected	0.95	1.00	1.00	0.95	1.00	1.00	0.95	1.00	1.00	0.95	1.00	1.00
Satd. Flow (prot)	1410	1863	1583	1770	1863	1583	1770	1863	1583	1770	1863	1468
Flt Permitted	0.49	1.00	1.00	0.19	1.00	1.00	0.73	1.00	1.00	0.42	1.00	1.00
Satd. Flow (perm)	724	1863	1583	351	1863	1583	1356	1863	1583	782	1863	1468
Peak-hour factor, PHF	0.92	0.92	0.92	0.92	0.92	0.92	0.92	0.92	0.92	0.92	0.92	0.92
Adj. Flow (vph)	99	586	75	73	339	243	71	53	209	170	45	63
RTOR Reduction (vph)	0	0	43	0	0	114	0	0	176	0	0	48
Lane Group Flow (vph)	99	586	32	73	339	129	71	53	33	170	45	15
Heavy Vehicles (%)	28%	2%	2%	2%	2%	2%	2%	2%	2%	2%	2%	10%
Turn Type	pm+pt		pm+ov	pm+pt		pm+ov	pm+pt		pm+ov	pm+pt		pm+ov
Protected Phases	5	2	3	1	6	7	3	8	1	7	4	5
Permitted Phases	2		2	6		6	8		8	4		4
Actuated Green, G (s)	36.4	33.3	37.1	38.4	34.3	45.8	13.5	9.7	13.8	28.2	17.4	20.5
Effective Green, g (s)	36.4	33.3	37.1	38.4	34.3	45.8	13.5	9.7	13.8	28.2	17.4	20.5
Actuated g/C Ratio	0.42	0.38	0.43	0.44	0.40	0.53	0.16	0.11	0.16	0.33	0.20	0.24
Clearance Time (s)	7.0	7.0	7.0	7.0	7.0	7.0	7.0	7.0	7.0	7.0	7.0	7.0
Vehicle Extension (s)	3.0	3.0	3.0	3.0	3.0	3.0	3.0	3.0	3.0	3.0	3.0	3.0
Lane Grp Cap (vph)	329	716	806	223	738	965	230	209	380	386	374	466
v/s Ratio Prot	0.01	c0.31	0.00	c0.02	0.18	0.02	0.01	0.03	0.00	c0.06	0.02	0.00
v/s Ratio Perm	0.12		0.02	0.13		0.06	0.03		0.02	c0.09		0.01
v/c Ratio	0.30	0.82	0.04	0.33	0.46	0.13	0.31	0.25	0.09	0.44	0.12	0.03
Uniform Delay, d1	16.3	23.9	14.4	16.5	19.3	10.3	32.1	35.1	31.0	22.1	28.3	25.4
Progression Factor	1.00	1.00	1.00	1.00	1.00	1.00	1.00	1.00	1.00	1.00	1.00	1.00
Incremental Delay, d2	0.5	7.2	0.0	0.9	0.5	0.1	0.8	0.6	0.1	0.8	0.1	0.0
Delay (s)	16.8	31.2	14.4	17.3	19.8	10.4	32.9	35.8	31.1	22.9	28.5	25.4
Level of Service	B	C	B	B	B	B	C	D	C	C	C	C
Approach Delay (s)		27.7			16.0			32.3			24.4	
Approach LOS		C			B			C			C	

Intersection Summary			
HCM Average Control Delay	24.2	HCM Level of Service	C
HCM Volume to Capacity ratio	0.61		
Actuated Cycle Length (s)	86.6	Sum of lost time (s)	21.0
Intersection Capacity Utilization	66.4%	ICU Level of Service	C
Analysis Period (min)	15		

c Critical Lane Group

Movement	EBL	EBT	EBR	WBL	WBT	WBR	NBL	NBT	NBR	SBL	SBT	SBR
Lane Configurations												
Volume (vph)	1	706	45	61	1806	5	40	1	82	1	9	5
Ideal Flow (vphpl)	1900	1900	1900	1900	1900	1900	1900	1900	1900	1900	1900	1900
Total Lost time (s)	7.0	7.0	7.0	7.0	7.0	7.0		7.0			7.0	
Lane Util. Factor	1.00	0.95	1.00	1.00	0.95	1.00		1.00			1.00	
Frt	1.00	1.00	0.85	1.00	1.00	0.85		0.91			0.96	
Flt Protected	0.95	1.00	1.00	0.95	1.00	1.00		0.98			1.00	
Satd. Flow (prot)	1770	3505	1583	1770	3343	1583		1662			1779	
Flt Permitted	0.95	1.00	1.00	0.95	1.00	1.00		0.89			0.98	
Satd. Flow (perm)	1770	3505	1583	1770	3343	1583		1496			1747	
Peak-hour factor, PHF	0.92	0.92	0.92	0.92	0.92	0.92	0.92	0.92	0.92	0.92	0.92	0.92
Adj. Flow (vph)	1	767	49	66	1963	5	43	1	89	1	10	5
RTOR Reduction (vph)	0	0	20	0	0	1	0	40	0	0	4	0
Lane Group Flow (vph)	1	767	29	66	1963	4	0	93	0	0	12	0
Heavy Vehicles (%)	2%	3%	2%	2%	8%	2%	3%	2%	2%	2%	2%	2%
Turn Type	Prot		Perm	Prot		Perm	Perm			Perm		
Protected Phases	5	2		1	6			8			4	
Permitted Phases			2			6	8			4		
Actuated Green, G (s)	0.7	62.8	62.8	8.8	70.9	70.9		13.9			13.9	
Effective Green, g (s)	0.7	62.8	62.8	8.8	70.9	70.9		13.9			13.9	
Actuated g/C Ratio	0.01	0.59	0.59	0.08	0.67	0.67		0.13			0.13	
Clearance Time (s)	7.0	7.0	7.0	7.0	7.0	7.0		7.0			7.0	
Vehicle Extension (s)	3.0	3.0	3.0	3.0	3.0	3.0		3.0			3.0	
Lane Grp Cap (vph)	12	2067	933	146	2226	1054		195			228	
v/s Ratio Prot	0.00	0.22		c0.04	c0.59							
v/s Ratio Perm			0.02			0.00		c0.06			0.01	
v/c Ratio	0.08	0.37	0.03	0.45	0.88	0.00		0.48			0.05	
Uniform Delay, d1	52.6	11.5	9.1	46.6	14.4	6.0		42.9			40.5	
Progression Factor	1.00	1.00	1.00	1.00	1.00	1.00		1.00			1.00	
Incremental Delay, d2	3.0	0.1	0.0	2.2	4.5	0.0		1.8			0.1	
Delay (s)	55.6	11.6	9.1	48.8	18.9	6.0		44.8			40.6	
Level of Service	E	B	A	D	B	A		D			D	
Approach Delay (s)		11.5			19.8			44.8			40.6	
Approach LOS		B			B			D			D	

Intersection Summary			
HCM Average Control Delay	18.8	HCM Level of Service	B
HCM Volume to Capacity ratio	0.84		
Actuated Cycle Length (s)	106.5	Sum of lost time (s)	21.0
Intersection Capacity Utilization	76.3%	ICU Level of Service	D
Analysis Period (min)	15		

c Critical Lane Group

Movement	EBL	EBR	NBL	NBT	SBT	SBR
Lane Configurations						
Volume (vph)	133	210	151	789	1382	150
Ideal Flow (vphpl)	1900	1900	1900	1900	1900	1900
Total Lost time (s)	7.0	7.0		7.0	7.0	7.0
Lane Util. Factor	1.00	1.00		0.95	0.95	1.00
Frt	1.00	0.85		1.00	1.00	0.85
Flt Protected	0.95	1.00		0.99	1.00	1.00
Satd. Flow (prot)	1770	1583		3511	3539	1583
Flt Permitted	0.95	1.00		0.51	1.00	1.00
Satd. Flow (perm)	1770	1583		1810	3539	1583
Peak-hour factor, PHF	0.92	0.92	0.92	0.92	0.92	0.92
Adj. Flow (vph)	145	228	164	858	1502	163
RTOR Reduction (vph)	0	57	0	0	0	56
Lane Group Flow (vph)	145	171	0	1022	1502	107
Turn Type		Perm	Perm			Perm
Protected Phases	4			2	6	
Permitted Phases		4	2			6
Actuated Green, G (s)	13.2	13.2		51.5	51.5	51.5
Effective Green, g (s)	13.2	13.2		51.5	51.5	51.5
Actuated g/C Ratio	0.17	0.17		0.65	0.65	0.65
Clearance Time (s)	7.0	7.0		7.0	7.0	7.0
Vehicle Extension (s)	3.0	3.0		3.0	3.0	3.0
Lane Grp Cap (vph)	297	266		1184	2316	1036
v/s Ratio Prot	0.08				0.42	
v/s Ratio Perm		c0.11		c0.56		0.07
v/c Ratio	0.49	0.64		1.09dl	0.65	0.10
Uniform Delay, d1	29.7	30.5		10.8	8.2	5.0
Progression Factor	1.00	1.00		1.00	1.00	1.00
Incremental Delay, d2	1.3	5.2		6.7	0.6	0.0
Delay (s)	31.0	35.7		17.5	8.8	5.1
Level of Service	C	D		B	A	A
Approach Delay (s)	33.9			17.5	8.4	
Approach LOS	C			B	A	

Intersection Summary			
HCM Average Control Delay	14.6	HCM Level of Service	B
HCM Volume to Capacity ratio	0.82		
Actuated Cycle Length (s)	78.7	Sum of lost time (s)	14.0
Intersection Capacity Utilization	89.3%	ICU Level of Service	E
Analysis Period (min)	15		

dl Defacto Left Lane. Recode with 1 though lane as a left lane.
c Critical Lane Group

HCM Signalized Intersection Capacity Analysis
300: Braddock Road & Gum Spring Road

LCPS (HS 7)
2020 Total Future

Movement	EBL	EBT	EBR	WBL	WBT	WBR	NBL	NBT	NBR	SBL	SBT	SBR
Lane Configurations												
Volume (vph)	291	363	98	159	527	329	109	361	72	377	574	351
Ideal Flow (vphpl)	1900	1900	1900	1900	1900	1900	1900	1900	1900	1900	1900	1900
Total Lost time (s)	7.0	7.0	7.0	7.0	7.0	7.0	7.0	7.0	7.0	7.0	7.0	7.0
Lane Util. Factor	0.97	0.95	1.00	1.00	0.95	1.00	1.00	0.95	1.00	1.00	0.95	1.00
Frt	1.00	1.00	0.85	1.00	1.00	0.85	1.00	1.00	0.85	1.00	1.00	0.85
Flt Protected	0.95	1.00	1.00	0.95	1.00	1.00	0.95	1.00	1.00	0.95	1.00	1.00
Satd. Flow (prot)	3433	3539	1583	1770	3539	1583	1770	3539	1583	1770	3539	1583
Flt Permitted	0.95	1.00	1.00	0.49	1.00	1.00	0.42	1.00	1.00	0.28	1.00	1.00
Satd. Flow (perm)	3433	3539	1583	917	3539	1583	774	3539	1583	513	3539	1583
Peak-hour factor, PHF	0.92	0.92	0.92	0.92	0.92	0.92	0.92	0.92	0.92	0.92	0.92	0.92
Adj. Flow (vph)	316	395	107	173	573	358	118	392	78	410	624	382
RTOR Reduction (vph)	0	0	74	0	0	32	0	0	56	0	0	78
Lane Group Flow (vph)	316	395	33	173	573	326	118	392	22	410	624	304
Turn Type	Prot		pm+ov	pm+pt		pm+ov	pm+pt		pm+ov	pm+pt		pm+ov
Protected Phases	7	4	5	3	8	1	5	2	3	1	6	7
Permitted Phases			4	8		8	2		2	6		6
Actuated Green, G (s)	13.8	22.3	30.7	32.1	20.3	41.5	24.3	15.9	27.7	44.1	28.7	42.5
Effective Green, g (s)	13.8	22.3	30.7	32.1	20.3	41.5	24.3	15.9	27.7	44.1	28.7	42.5
Actuated g/C Ratio	0.14	0.22	0.31	0.32	0.20	0.42	0.24	0.16	0.28	0.44	0.29	0.43
Clearance Time (s)	7.0	7.0	7.0	7.0	7.0	7.0	7.0	7.0	7.0	7.0	7.0	7.0
Vehicle Extension (s)	3.0	3.0	3.0	3.0	3.0	3.0	3.0	3.0	3.0	3.0	3.0	3.0
Lane Grp Cap (vph)	478	796	602	398	724	774	274	567	554	497	1024	790
v/s Ratio Prot	c0.09	0.11	0.00	0.05	c0.16	0.09	0.04	0.11	0.00	c0.18	0.18	0.05
v/s Ratio Perm			0.02	0.09		0.12	0.07		0.01	c0.19		0.14
v/c Ratio	0.66	0.50	0.06	0.43	0.79	0.42	0.43	0.69	0.04	0.82	0.61	0.39
Uniform Delay, d1	40.5	33.5	24.1	25.2	37.4	20.4	30.3	39.3	26.1	20.9	30.4	19.4
Progression Factor	1.00	1.00	1.00	1.00	1.00	1.00	1.00	1.00	1.00	1.00	1.00	1.00
Incremental Delay, d2	3.4	0.5	0.0	0.8	5.9	0.4	1.1	3.6	0.0	10.7	1.0	0.3
Delay (s)	43.9	34.0	24.1	25.9	43.4	20.7	31.4	43.0	26.1	31.6	31.4	19.7
Level of Service	D	C	C	C	D	C	C	D	C	C	C	B
Approach Delay (s)		36.5			33.3			38.4			28.3	
Approach LOS		D			C			D			C	

Intersection Summary			
HCM Average Control Delay	32.9	HCM Level of Service	C
HCM Volume to Capacity ratio	0.75		
Actuated Cycle Length (s)	99.2	Sum of lost time (s)	21.0
Intersection Capacity Utilization	77.1%	ICU Level of Service	D
Analysis Period (min)	15		
c Critical Lane Group			

HCM Unsignalized Intersection Capacity Analysis
600: Road A & North Star Blvd.

LCPS (HS 7)
2020 Total Future

Movement	EBL	EBR	NBL	NBT	SBT	SBR
Lane Configurations						
Sign Control	Stop			Stop	Stop	
Volume (vph)	14	24	16	160	163	7
Peak Hour Factor	0.92	0.92	0.92	0.92	0.92	0.92
Hourly flow rate (vph)	15	26	17	174	177	8

Direction, Lane #	EB 1	EB 2	NB 1	NB 2	SB 1	SB 2
Volume Total (vph)	15	26	17	174	177	8
Volume Left (vph)	15	0	17	0	0	0
Volume Right (vph)	0	26	0	0	0	8
Hadj (s)	1.74	1.00	2.20	0.03	0.03	0.15
Departure Headway (s)	7.1	6.4	7.0	4.8	4.8	4.9
Degree Utilization, x	0.03	0.05	0.03	0.23	0.24	0.01
Capacity (veh/h)	475	530	504	732	728	709
Control Delay (s)	9.1	8.5	9.0	8.1	8.1	6.8
Approach Delay (s)	8.7		8.2		8.1	
Approach LOS	A		A		A	

Intersection Summary			
Delay	8.2		
HCM Level of Service	A		
Intersection Capacity Utilization	23.3%	ICU Level of Service	A
Analysis Period (min)	15		

Movement	EBL	EBR	NBL	NBT	SBT	SBR
Lane Configurations						
Sign Control	Stop			Stop	Stop	
Volume (vph)	98	195	107	79	136	51
Peak Hour Factor	0.92	0.92	0.92	0.92	0.92	0.92
Hourly flow rate (vph)	107	212	116	86	148	55

Direction, Lane #	EB 1	EB 2	NB 1	NB 2	SB 1	SB 2
Volume Total (vph)	107	212	116	86	148	55
Volume Left (vph)	107	0	116	0	0	0
Volume Right (vph)	0	212	0	0	0	55
Hadj (s)	0.53	-0.67	0.53	0.15	0.36	-0.67
Departure Headway (s)	6.1	4.9	6.1	5.7	6.0	4.9
Degree Utilization, x	0.18	0.29	0.20	0.14	0.24	0.08
Capacity (veh/h)	559	695	560	594	574	686
Control Delay (s)	9.2	8.7	9.4	8.5	9.7	7.1
Approach Delay (s)	8.9		9.0		9.0	
Approach LOS	A		A		A	

Intersection Summary			
Delay	8.9		
HCM Level of Service	A		
Intersection Capacity Utilization	28.5%	ICU Level of Service	A
Analysis Period (min)	15		

Movement	EBL	EBT	EBR	WBL	WBT	WBR	NBL	NBT	NBR	SBL	SBT	SBR
Lane Configurations												
Volume (vph)	74	299	71	182	454	124	77	40	100	169	55	100
Ideal Flow (vphpl)	1900	1900	1900	1900	1900	1900	1900	1900	1900	1900	1900	1900
Total Lost time (s)	7.0	7.0	7.0	7.0	7.0	7.0	7.0	7.0	7.0	7.0	7.0	7.0
Lane Util. Factor	1.00	1.00	1.00	1.00	1.00	1.00	1.00	1.00	1.00	1.00	1.00	1.00
Frt	1.00	1.00	0.85	1.00	1.00	0.85	1.00	1.00	0.85	1.00	1.00	0.85
Flt Protected	0.95	1.00	1.00	0.95	1.00	1.00	0.95	1.00	1.00	0.95	1.00	1.00
Satd. Flow (prot)	1671	1863	1583	1770	1863	1583	1770	1863	1583	1770	1863	1524
Flt Permitted	0.26	1.00	1.00	0.35	1.00	1.00	0.72	1.00	1.00	0.41	1.00	1.00
Satd. Flow (perm)	460	1863	1583	657	1863	1583	1337	1863	1583	771	1863	1524
Peak-hour factor, PHF	0.92	0.92	0.92	0.92	0.92	0.92	0.92	0.92	0.92	0.92	0.92	0.92
Adj. Flow (vph)	80	325	77	198	493	135	84	43	109	184	60	109
RTOR Reduction (vph)	0	0	52	0	0	70	0	0	85	0	0	78
Lane Group Flow (vph)	80	325	25	198	493	65	84	43	24	184	60	31
Heavy Vehicles (%)	8%	2%	2%	2%	2%	2%	2%	2%	2%	2%	2%	6%
Turn Type	pm+pt		pm+ov	pm+pt		pm+ov	pm+pt		pm+ov	pm+pt		pm+ov
Protected Phases	5	2	3	1	6	7	3	8	1	7	4	5
Permitted Phases	2		2	6		6	8		8	4		4
Actuated Green, G (s)	27.5	22.4	27.0	34.9	26.1	39.4	13.8	9.2	18.0	29.5	17.9	23.0
Effective Green, g (s)	27.5	22.4	27.0	34.9	26.1	39.4	13.8	9.2	18.0	29.5	17.9	23.0
Actuated g/C Ratio	0.34	0.27	0.33	0.43	0.32	0.48	0.17	0.11	0.22	0.36	0.22	0.28
Clearance Time (s)	7.0	7.0	7.0	7.0	7.0	7.0	7.0	7.0	7.0	7.0	7.0	7.0
Vehicle Extension (s)	3.0	3.0	3.0	3.0	3.0	3.0	3.0	3.0	3.0	3.0	3.0	3.0
Lane Grp Cap (vph)	230	511	659	401	595	899	250	210	484	441	408	560
v/s Ratio Prot	0.02	0.17	0.00	c0.05	c0.26	0.01	0.02	0.02	0.01	c0.07	0.03	0.00
v/s Ratio Perm	0.10		0.01	0.16		0.03	0.04		0.01	c0.08		0.02
v/c Ratio	0.35	0.64	0.04	0.49	0.83	0.07	0.34	0.20	0.05	0.42	0.15	0.05
Uniform Delay, d1	19.6	26.1	18.5	15.8	25.7	11.3	29.6	32.9	25.1	19.0	25.7	21.4
Progression Factor	1.00	1.00	1.00	1.00	1.00	1.00	1.00	1.00	1.00	1.00	1.00	1.00
Incremental Delay, d2	0.9	2.6	0.0	1.0	9.3	0.0	0.8	0.5	0.0	0.6	0.2	0.0
Delay (s)	20.5	28.7	18.6	16.8	35.0	11.4	30.4	33.4	25.2	19.6	25.9	21.5
Level of Service	C	C	B	B	D	B	C	C	C	B	C	C
Approach Delay (s)		25.7			26.8			28.5			21.2	
Approach LOS		C			C			C			C	

Intersection Summary			
HCM Average Control Delay	25.7	HCM Level of Service	C
HCM Volume to Capacity ratio	0.61		
Actuated Cycle Length (s)	81.7	Sum of lost time (s)	21.0
Intersection Capacity Utilization	61.5%	ICU Level of Service	B
Analysis Period (min)	15		

c Critical Lane Group

APPENDIX N-2

INTERSECTION CAPACITY ANALYSIS RESULTS– FUTURE CONDITIONS WITH PROPOSED DEVELOPMENT (2020) – HS PEAK ALTERNATIVE 2

HCM Signalized Intersection Capacity Analysis
100: Route 50 & Goshen Road

LCPS (HS 7)
2020 Total Future

Movement	EBL	EBT	EBR	WBL	WBT	WBR	NBL	NBT	NBR	SBL	SBT	SBR
Lane Configurations												
Volume (vph)	11	1441	51	82	654	14	49	10	67	5	1	0
Ideal Flow (vphpl)	1900	1900	1900	1900	1900	1900	1900	1900	1900	1900	1900	1900
Total Lost time (s)	7.0	7.0	7.0	7.0	7.0	7.0		7.0			7.0	
Lane Util. Factor	1.00	0.95	1.00	1.00	0.95	1.00		1.00			1.00	
Frt	1.00	1.00	0.85	1.00	1.00	0.85		0.93			1.00	
Flt Protected	0.95	1.00	1.00	0.95	1.00	1.00		0.98			0.96	
Satd. Flow (prot)	1770	3505	1583	1770	3343	1583		1696			1788	
Flt Permitted	0.95	1.00	1.00	0.95	1.00	1.00		0.87			0.80	
Satd. Flow (perm)	1770	3505	1583	1770	3343	1583		1505			1490	
Peak-hour factor, PHF	0.92	0.92	0.92	0.92	0.92	0.92	0.92	0.92	0.92	0.92	0.92	0.92
Adj. Flow (vph)	12	1566	55	89	711	15	53	11	73	5	1	0
RTOR Reduction (vph)	0	0	15	0	0	5	0	23	0	0	0	0
Lane Group Flow (vph)	12	1566	40	89	711	10	0	114	0	0	6	0
Heavy Vehicles (%)	2%	3%	2%	2%	8%	2%	2%	2%	2%	2%	2%	2%
Turn Type	Prot		Perm	Prot		Perm	Perm			Perm		
Protected Phases	5	2		1	6			8			4	
Permitted Phases			2			6	8			4		
Actuated Green, G (s)	1.2	63.7	63.7	10.8	73.3	73.3		13.7			13.7	
Effective Green, g (s)	1.2	63.7	63.7	10.8	73.3	73.3		13.7			13.7	
Actuated g/C Ratio	0.01	0.58	0.58	0.10	0.67	0.67		0.13			0.13	
Clearance Time (s)	7.0	7.0	7.0	7.0	7.0	7.0		7.0			7.0	
Vehicle Extension (s)	3.0	3.0	3.0	3.0	3.0	3.0		3.0			3.0	
Lane Grp Cap (vph)	19	2045	923	175	2244	1063		189			187	
v/s Ratio Prot	0.01	c0.45		c0.05	0.21							
v/s Ratio Perm			0.03			0.01		c0.08			0.00	
v/c Ratio	0.63	0.77	0.04	0.51	0.32	0.01		0.60			0.03	
Uniform Delay, d1	53.8	17.1	9.7	46.7	7.5	5.9		45.2			41.9	
Progression Factor	1.00	1.00	1.00	1.00	1.00	1.00		1.00			1.00	
Incremental Delay, d2	52.7	1.8	0.0	2.3	0.1	0.0		5.4			0.1	
Delay (s)	106.5	18.9	9.7	49.0	7.6	5.9		50.6			42.0	
Level of Service	F	B	A	D	A	A		D			D	
Approach Delay (s)		19.2			12.1			50.6			42.0	
Approach LOS		B			B			D			D	

Intersection Summary			
HCM Average Control Delay	18.7	HCM Level of Service	B
HCM Volume to Capacity ratio	0.71		
Actuated Cycle Length (s)	109.2	Sum of lost time (s)	21.0
Intersection Capacity Utilization	68.9%	ICU Level of Service	C
Analysis Period (min)	15		

c Critical Lane Group

HCM Unsignalized Intersection Capacity Analysis
200: Tall Cedars Pkwy & West Spine Road

LCPS (HS 7)
2020 Total Future

Movement	EBL	EBR	NBL	NBT	SBT	SBR
Lane Configurations						
Volume (veh/h)	155	243	162	1388	621	161
Sign Control	Stop			Free	Free	
Grade	0%			0%	0%	
Peak Hour Factor	0.92	0.92	0.92	0.92	0.92	0.92
Hourly flow rate (vph)	168	264	176	1509	675	175
Pedestrians						
Lane Width (ft)						
Walking Speed (ft/s)						
Percent Blockage						
Right turn flare (veh)						
Median type				None	None	
Median storage veh)						
Upstream signal (ft)						
pX, platoon unblocked						
vC, conflicting volume	1782	338	675			
vC1, stage 1 conf vol						
vC2, stage 2 conf vol						
vCu, unblocked vol	1782	338	675			
tC, single (s)	6.8	6.9	4.1			
tC, 2 stage (s)						
tF (s)	3.5	3.3	2.2			
p0 queue free %	0	60	81			
cM capacity (veh/h)	59	658	912			

Direction, Lane #	EB 1	EB 2	NB 1	NB 2	SB 1	SB 2	SB 3
Volume Total	168	264	679	1006	338	338	175
Volume Left	168	0	176	0	0	0	0
Volume Right	0	264	0	0	0	0	175
cSH	59	658	912	1700	1700	1700	1700
Volume to Capacity	2.85	0.40	0.19	0.59	0.20	0.20	0.10
Queue Length 95th (ft)	433	48	18	0	0	0	0
Control Delay (s)	985.0	14.1	4.6	0.0	0.0	0.0	0.0
Lane LOS	F	B	A				
Approach Delay (s)	392.2		1.8		0.0		
Approach LOS	F						

Intersection Summary			
Average Delay	58.2		
Intersection Capacity Utilization	78.8%	ICU Level of Service	D
Analysis Period (min)	15		

Movement	EBL	EBT	EBR	WBL	WBT	WBR	NBL	NBT	NBR	SBL	SBT	SBR
Lane Configurations												
Volume (vph)	396	933	124	102	557	499	64	491	132	463	325	197
Ideal Flow (vphpl)	1900	1900	1900	1900	1900	1900	1900	1900	1900	1900	1900	1900
Total Lost time (s)	7.0	7.0	7.0	7.0	7.0	7.0	7.0	7.0		7.0	7.0	7.0
Lane Util. Factor	1.00	1.00	1.00	1.00	1.00	1.00	1.00	0.95		1.00	0.95	1.00
Frt	1.00	1.00	0.85	1.00	1.00	0.85	1.00	0.97		1.00	1.00	0.85
Flt Protected	0.95	1.00	1.00	0.95	1.00	1.00	0.95	1.00		0.95	1.00	1.00
Satd. Flow (prot)	1770	1863	1583	1770	1863	1583	1770	3427		1770	3539	1583
Flt Permitted	0.14	1.00	1.00	0.10	1.00	1.00	0.00	1.00		0.00	1.00	1.00
Satd. Flow (perm)	253	1863	1583	182	1863	1583	0	3427		0	3539	1583
Peak-hour factor, PHF	0.92	0.92	0.92	0.92	0.92	0.92	0.92	0.92	0.92	0.92	0.92	0.92
Adj. Flow (vph)	430	1014	135	111	605	542	70	534	143	503	353	214
RTOR Reduction (vph)	0	0	43	0	0	6	0	22	0	0	0	100
Lane Group Flow (vph)	430	1014	92	111	605	536	70	655	0	503	353	114
Turn Type	pm+pt		pm+ov	pm+pt		pm+ov	pm+pt			pm+pt		pm+ov
Protected Phases	7	4	5	3	8	1	5	2		1	6	7
Permitted Phases	4		4	8		8	2			6		6
Actuated Green, G (s)	47.0	42.0	61.7	45.0	41.0	58.0	19.7	19.0		17.0	16.3	21.3
Effective Green, g (s)	47.0	42.0	61.7	45.0	41.0	58.0	19.7	19.0		17.0	16.3	21.3
Actuated g/C Ratio	0.43	0.38	0.56	0.41	0.37	0.53	0.18	0.17		0.15	0.15	0.19
Clearance Time (s)	7.0	7.0	7.0	7.0	7.0	7.0	7.0	7.0		7.0	7.0	7.0
Vehicle Extension (s)	3.0	3.0	3.0	3.0	3.0	3.0	3.0	3.0		3.0	3.0	3.0
Lane Grp Cap (vph)	177	711	888	132	694	935	317	592		274	524	307
v/s Ratio Prot	c0.11	0.54	0.02	0.03	0.32	0.09	0.04	c0.19		c0.28	0.10	0.02
v/s Ratio Perm	c0.93		0.04	0.31		0.25						0.06
v/c Ratio	2.43	1.43	0.10	0.84	0.87	0.57	0.22	1.11		1.84	0.67	0.37
Uniform Delay, d1	31.2	34.0	11.3	29.0	32.1	17.6	38.6	45.5		46.5	44.3	38.5
Progression Factor	1.00	1.00	1.00	1.00	1.00	1.00	1.00	1.00		1.00	1.00	1.00
Incremental Delay, d2	660.1	199.9	0.1	35.8	11.6	0.9	0.4	69.4		390.0	3.4	0.8
Delay (s)	691.3	233.9	11.3	64.7	43.7	18.5	38.9	114.9		436.5	47.7	39.3
Level of Service	F	F	B	E	D	B	D	F		F	D	D
Approach Delay (s)		339.4			34.7			107.8			228.8	
Approach LOS		F			C			F			F	

Intersection Summary			
HCM Average Control Delay	194.4	HCM Level of Service	F
HCM Volume to Capacity ratio	1.87		
Actuated Cycle Length (s)	110.0	Sum of lost time (s)	21.0
Intersection Capacity Utilization	121.5%	ICU Level of Service	H
Analysis Period (min)	15		
c Critical Lane Group			

Movement	EBL	EBR	NBL	NBT	SBT	SBR
Lane Configurations						
Sign Control	Stop			Stop	Stop	
Volume (vph)	4	19	40	116	109	9
Peak Hour Factor	0.92	0.92	0.92	0.92	0.92	0.92
Hourly flow rate (vph)	4	21	43	126	118	10

Direction, Lane #	EB 1	EB 2	NB 1	NB 2	SB 1	SB 2
Volume Total (vph)	4	21	43	126	118	10
Volume Left (vph)	4	0	43	0	0	0
Volume Right (vph)	0	21	0	0	0	10
Hadj (s)	2.20	-0.07	1.83	0.03	0.03	1.00
Departure Headway (s)	7.4	5.1	6.5	4.7	4.7	5.7
Degree Utilization, x	0.01	0.03	0.08	0.16	0.16	0.02
Capacity (veh/h)	461	658	544	752	741	617
Control Delay (s)	9.3	7.1	8.8	7.4	7.4	7.6
Approach Delay (s)	7.5		7.8		7.4	
Approach LOS	A		A		A	

Intersection Summary			
Delay	7.6		
HCM Level of Service	A		
Intersection Capacity Utilization	18.9%	ICU Level of Service	A
Analysis Period (min)	15		

Movement	EBL	EBR	NBL	NBT	SBT	SBR
Lane Configurations						
Sign Control	Stop			Stop	Stop	
Volume (vph)	23	167	357	133	79	49
Peak Hour Factor	0.92	0.92	0.92	0.92	0.92	0.92
Hourly flow rate (vph)	25	182	388	145	86	53

Direction, Lane #	EB 1	EB 2	NB 1	NB 2	SB 1	SB 2
Volume Total (vph)	25	182	388	145	86	53
Volume Left (vph)	25	0	388	0	0	0
Volume Right (vph)	0	182	0	0	0	53
Hadj (s)	0.53	-0.67	0.53	0.39	0.15	-0.67
Departure Headway (s)	6.7	5.5	5.8	5.7	5.9	5.1
Degree Utilization, x	0.05	0.28	0.63	0.23	0.14	0.08
Capacity (veh/h)	499	608	601	616	578	668
Control Delay (s)	8.8	9.4	16.8	9.1	8.7	7.3
Approach Delay (s)	9.3		14.7		8.2	
Approach LOS	A		B		A	

Intersection Summary			
Delay	12.4		
HCM Level of Service	B		
Intersection Capacity Utilization	36.4%	ICU Level of Service	A
Analysis Period (min)	15		

Movement	EBL	EBT	EBR	WBL	WBT	WBR	NBL	NBT	NBR	SBL	SBT	SBR
Lane Configurations												
Volume (veh/h)	75	539	69	67	312	368	65	49	192	224	41	51
Sign Control		Free			Free			Stop			Stop	
Grade		0%			0%			0%			0%	
Peak Hour Factor	0.92	0.92	0.92	0.92	0.92	0.92	0.92	0.92	0.92	0.92	0.92	0.92
Hourly flow rate (vph)	82	586	75	73	339	400	71	53	209	243	45	55
Pedestrians												
Lane Width (ft)												
Walking Speed (ft/s)												
Percent Blockage												
Right turn flare (veh)									12			12
Median type		None			None							
Median storage veh)												
Upstream signal (ft)												
pX, platoon unblocked												
vC, conflicting volume	739			661			1284	1634	586	1365	1309	339
vC1, stage 1 conf vol												
vC2, stage 2 conf vol												
vCu, unblocked vol	739			661			1284	1634	586	1365	1309	339
tC, single (s)	4.4			4.1			7.1	6.5	6.2	7.1	6.5	6.3
tC, 2 stage (s)												
tF (s)	2.5			2.2			3.5	4.0	3.3	3.5	4.0	3.4
p0 queue free %	89			92			15	36	59	0	66	92
cM capacity (veh/h)	742			927			83	83	510	31	131	681

Direction, Lane #	EB 1	EB 2	EB 3	WB 1	WB 2	WB 3	NB 1	NB 2	SB 1	SB 2
Volume Total	82	586	75	73	339	400	71	262	243	100
Volume Left	82	0	0	73	0	0	71	0	243	0
Volume Right	0	0	75	0	0	400	0	209	0	55
cSH	742	1700	1700	927	1700	1700	83	408	31	293
Volume to Capacity	0.11	0.34	0.04	0.08	0.20	0.24	0.85	0.64	7.75	0.34
Queue Length 95th (ft)	9	0	0	6	0	0	110	109	Err	37
Control Delay (s)	10.4	0.0	0.0	9.2	0.0	0.0	146.8	35.0	Err	26.5
Lane LOS	B			A			F	D	F	D
Approach Delay (s)	1.1			0.8			58.7		7095.6	
Approach LOS							F		F	

Intersection Summary			
Average Delay	1102.1		
Intersection Capacity Utilization	62.7%	ICU Level of Service	B
Analysis Period (min)	15		

HCM Signalized Intersection Capacity Analysis
100: Route 50 & Goshen Road

LCPS (HS 7)
2015 Total Future

Movement	EBL	EBT	EBR	WBL	WBT	WBR	NBL	NBT	NBR	SBL	SBT	SBR
Lane Configurations												
Volume (vph)	1	706	43	52	1806	5	37	1	64	1	9	5
Ideal Flow (vphpl)	1900	1900	1900	1900	1900	1900	1900	1900	1900	1900	1900	1900
Total Lost time (s)	7.0	7.0	7.0	7.0	7.0	7.0		7.0			7.0	
Lane Util. Factor	1.00	0.95	1.00	1.00	0.95	1.00		1.00			1.00	
Frt	1.00	1.00	0.85	1.00	1.00	0.85		0.91			0.96	
Flt Protected	0.95	1.00	1.00	0.95	1.00	1.00		0.98			1.00	
Satd. Flow (prot)	1770	3505	1583	1770	3343	1583		1668			1779	
Flt Permitted	0.95	1.00	1.00	0.95	1.00	1.00		0.87			0.98	
Satd. Flow (perm)	1770	3505	1583	1770	3343	1583		1485			1747	
Peak-hour factor, PHF	0.92	0.92	0.92	0.92	0.92	0.92	0.92	0.92	0.92	0.92	0.92	0.92
Adj. Flow (vph)	1	767	47	57	1963	5	40	1	70	1	10	5
RTOR Reduction (vph)	0	0	19	0	0	1	0	34	0	0	4	0
Lane Group Flow (vph)	1	767	28	57	1963	4	0	77	0	0	12	0
Heavy Vehicles (%)	2%	3%	2%	2%	8%	2%	3%	2%	2%	2%	2%	2%
Turn Type	Prot		Perm	Prot		Perm	Perm			Perm		
Protected Phases	5	2		1	6			8			4	
Permitted Phases			2			6	8			4		
Actuated Green, G (s)	0.7	61.4	61.4	8.4	69.1	69.1		12.8			12.8	
Effective Green, g (s)	0.7	61.4	61.4	8.4	69.1	69.1		12.8			12.8	
Actuated g/C Ratio	0.01	0.59	0.59	0.08	0.67	0.67		0.12			0.12	
Clearance Time (s)	7.0	7.0	7.0	7.0	7.0	7.0		7.0			7.0	
Vehicle Extension (s)	3.0	3.0	3.0	3.0	3.0	3.0		3.0			3.0	
Lane Grp Cap (vph)	12	2077	938	144	2230	1056		183			216	
v/s Ratio Prot	0.00	0.22		c0.03	c0.59							
v/s Ratio Perm			0.02			0.00		c0.05			0.01	
v/c Ratio	0.08	0.37	0.03	0.40	0.88	0.00		0.42			0.05	
Uniform Delay, d1	51.1	11.0	8.7	45.2	13.9	5.8		42.0			40.1	
Progression Factor	1.00	1.00	1.00	1.00	1.00	1.00		1.00			1.00	
Incremental Delay, d2	3.0	0.1	0.0	1.8	4.4	0.0		1.6			0.1	
Delay (s)	54.1	11.1	8.8	47.0	18.3	5.8		43.5			40.2	
Level of Service	D	B	A	D	B	A		D			D	
Approach Delay (s)		11.0			19.1			43.5			40.2	
Approach LOS		B			B			D			D	

Intersection Summary			
HCM Average Control Delay	17.9	HCM Level of Service	B
HCM Volume to Capacity ratio	0.83		
Actuated Cycle Length (s)	103.6	Sum of lost time (s)	21.0
Intersection Capacity Utilization	74.3%	ICU Level of Service	D
Analysis Period (min)	15		

c Critical Lane Group

HCM Unsignalized Intersection Capacity Analysis
200: Tall Cedars Pkwy & West Spine Road

LCPS (HS 7)
2015 Total Future

Movement	EBL	EBR	NBL	NBT	SBT	SBR
Lane Configurations						
Volume (veh/h)	126	210	151	789	1382	147
Sign Control	Stop			Free	Free	
Grade	0%			0%	0%	
Peak Hour Factor	0.92	0.92	0.92	0.92	0.92	0.92
Hourly flow rate (vph)	137	228	164	858	1502	160
Pedestrians						
Lane Width (ft)						
Walking Speed (ft/s)						
Percent Blockage						
Right turn flare (veh)						
Median type				None	None	
Median storage veh)						
Upstream signal (ft)						
pX, platoon unblocked						
vC, conflicting volume	2259	751	1502			
vC1, stage 1 conf vol						
vC2, stage 2 conf vol						
vCu, unblocked vol	2259	751	1502			
tC, single (s)	6.8	6.9	4.1			
tC, 2 stage (s)						
tF (s)	3.5	3.3	2.2			
p0 queue free %	0	35	63			
cM capacity (veh/h)	22	353	442			

Direction, Lane #	EB 1	EB 2	NB 1	NB 2	SB 1	SB 2	SB 3
Volume Total	137	228	450	572	751	751	160
Volume Left	137	0	164	0	0	0	0
Volume Right	0	228	0	0	0	0	160
cSH	22	353	442	1700	1700	1700	1700
Volume to Capacity	6.28	0.65	0.37	0.34	0.44	0.44	0.09
Queue Length 95th (ft)	Err	107	42	0	0	0	0
Control Delay (s)	Err	32.0	11.6	0.0	0.0	0.0	0.0
Lane LOS	F	D	B				
Approach Delay (s)	3769.6		5.1		0.0		
Approach LOS	F						

Intersection Summary			
Average Delay	453.3		
Intersection Capacity Utilization	81.4%	ICU Level of Service	D
Analysis Period (min)	15		

HCM Signalized Intersection Capacity Analysis
300: Braddock Road & Gum Spring Road

LCPS (HS 7)
2015 Total Future

Movement	EBL	EBT	EBR	WBL	WBT	WBR	NBL	NBT	NBR	SBL	SBT	SBR
Lane Configurations												
Volume (vph)	287	475	95	159	583	329	107	361	72	377	574	349
Ideal Flow (vphpl)	1900	1900	1900	1900	1900	1900	1900	1900	1900	1900	1900	1900
Total Lost time (s)	7.0	7.0	7.0	7.0	7.0	7.0	7.0	7.0		7.0	7.0	7.0
Lane Util. Factor	1.00	1.00	1.00	1.00	1.00	1.00	1.00	0.95		1.00	0.95	1.00
Frt	1.00	1.00	0.85	1.00	1.00	0.85	1.00	0.98		1.00	1.00	0.85
Flt Protected	0.95	1.00	1.00	0.95	1.00	1.00	0.95	1.00		0.95	1.00	1.00
Satd. Flow (prot)	1770	1863	1583	1770	1863	1583	1770	3451		1770	3539	1583
Flt Permitted	0.10	1.00	1.00	0.28	1.00	1.00	0.25	1.00		0.25	1.00	1.00
Satd. Flow (perm)	183	1863	1583	530	1863	1583	464	3451		474	3539	1583
Peak-hour factor, PHF	0.92	0.92	0.92	0.92	0.92	0.92	0.92	0.92	0.92	0.92	0.92	0.92
Adj. Flow (vph)	312	516	103	173	634	358	116	392	78	410	624	379
RTOR Reduction (vph)	0	0	60	0	0	59	0	16	0	0	0	56
Lane Group Flow (vph)	312	516	43	173	634	299	116	454	0	410	624	323
Turn Type	pm+pt		pm+ov	pm+pt		pm+ov	pm+pt			pm+pt		pm+ov
Protected Phases	7	4	5	3	8	1	5	2		1	6	7
Permitted Phases	4		4	8		8	2			6		6
Actuated Green, G (s)	57.6	40.8	44.8	46.2	35.1	43.1	23.3	19.3		31.3	23.3	40.1
Effective Green, g (s)	57.6	40.8	44.8	46.2	35.1	43.1	23.3	19.3		31.3	23.3	40.1
Actuated g/C Ratio	0.54	0.38	0.42	0.43	0.33	0.40	0.22	0.18		0.29	0.22	0.37
Clearance Time (s)	7.0	7.0	7.0	7.0	7.0	7.0	7.0	7.0		7.0	7.0	7.0
Vehicle Extension (s)	3.0	3.0	3.0	3.0	3.0	3.0	3.0	3.0		3.0	3.0	3.0
Lane Grp Cap (vph)	347	709	765	357	610	740	150	621		235	769	696
v/s Ratio Prot	c0.14	c0.28	0.00	0.05	c0.34	0.03	0.03	0.13		c0.13	0.18	0.07
v/s Ratio Perm	0.34		0.03	0.16		0.16	0.14			c0.38		0.13
v/c Ratio	0.90	0.73	0.06	0.48	1.04	0.40	0.77	0.73		1.74	0.81	0.46
Uniform Delay, d1	31.0	28.4	18.6	20.4	36.0	22.9	38.1	41.5		35.6	39.9	25.4
Progression Factor	1.00	1.00	1.00	1.00	1.00	1.00	1.00	1.00		1.00	1.00	1.00
Incremental Delay, d2	24.7	3.7	0.0	1.0	47.0	0.4	21.6	4.4		352.2	6.5	0.5
Delay (s)	55.7	32.2	18.6	21.4	83.1	23.3	59.7	45.9		387.7	46.4	25.9
Level of Service	E	C	B	C	F	C	E	D		F	D	C
Approach Delay (s)		38.6			55.5			48.7			139.9	
Approach LOS		D			E			D			F	

Intersection Summary			
HCM Average Control Delay	79.8	HCM Level of Service	E
HCM Volume to Capacity ratio	1.49		
Actuated Cycle Length (s)	107.2	Sum of lost time (s)	35.0
Intersection Capacity Utilization	103.1%	ICU Level of Service	G
Analysis Period (min)	15		
c Critical Lane Group			

HCM Unsignalized Intersection Capacity Analysis
600: Road A & North Star Blvd.

LCPS (HS 7)
2015 Total Future

Movement	EBL	EBR	NBL	NBT	SBT	SBR
Lane Configurations						
Sign Control	Stop			Stop	Stop	
Volume (vph)	6	33	21	103	134	3
Peak Hour Factor	0.92	0.92	0.92	0.92	0.92	0.92
Hourly flow rate (vph)	7	36	23	112	146	3

Direction, Lane #	EB 1	EB 2	NB 1	NB 2	SB 1	SB 2
Volume Total (vph)	7	36	23	112	146	3
Volume Left (vph)	7	0	23	0	0	0
Volume Right (vph)	0	36	0	0	0	3
Hadj (s)	2.20	0.90	2.20	0.03	0.03	1.00
Departure Headway (s)	7.4	6.1	7.0	4.8	4.8	5.8
Degree Utilization, x	0.01	0.06	0.04	0.15	0.19	0.01
Capacity (veh/h)	463	562	507	736	734	611
Control Delay (s)	9.3	8.3	9.1	7.4	7.7	7.6
Approach Delay (s)	8.4		7.7		7.7	
Approach LOS	A		A		A	

Intersection Summary			
Delay	7.8		
HCM Level of Service	A		
Intersection Capacity Utilization	23.7%	ICU Level of Service	A
Analysis Period (min)	15		

Movement	EBL	EBR	NBL	NBT	SBT	SBR
Lane Configurations						
Sign Control	Stop			Stop	Stop	
Volume (vph)	41	273	146	83	145	23
Peak Hour Factor	0.92	0.92	0.92	0.92	0.92	0.92
Hourly flow rate (vph)	45	297	159	90	158	25

Direction, Lane #	EB 1	EB 2	NB 1	NB 2	SB 1	SB 2
Volume Total (vph)	45	297	159	90	158	25
Volume Left (vph)	45	0	159	0	0	0
Volume Right (vph)	0	297	0	0	0	25
Hadj (s)	0.53	-0.67	0.53	0.14	0.36	-0.67
Departure Headway (s)	6.2	5.0	6.2	5.8	6.1	5.1
Degree Utilization, x	0.08	0.41	0.27	0.15	0.27	0.04
Capacity (veh/h)	547	684	555	588	558	661
Control Delay (s)	8.5	10.3	10.3	8.6	10.1	7.1
Approach Delay (s)	10.1		9.7		9.7	
Approach LOS	B		A		A	

Intersection Summary			
Delay		9.9	
HCM Level of Service		A	
Intersection Capacity Utilization		31.2%	ICU Level of Service A
Analysis Period (min)		15	

Movement	EBL	EBT	EBR	WBL	WBT	WBR	NBL	NBT	NBR	SBL	SBT	SBR
Lane Configurations												
Volume (veh/h)	68	299	71	182	454	173	77	40	100	266	55	90
Sign Control		Free			Free			Stop			Stop	
Grade		0%			0%			0%			0%	
Peak Hour Factor	0.92	0.92	0.92	0.92	0.92	0.92	0.92	0.92	0.92	0.92	0.92	0.92
Hourly flow rate (vph)	74	325	77	198	493	188	84	43	109	289	60	98
Pedestrians												
Lane Width (ft)												
Walking Speed (ft/s)												
Percent Blockage												
Right turn flare (veh)									12			12
Median type		None			None							
Median storage veh)												
Upstream signal (ft)												
pX, platoon unblocked												
vC, conflicting volume	682			402			1441	1550	325	1438	1439	493
vC1, stage 1 conf vol												
vC2, stage 2 conf vol												
vCu, unblocked vol	682			402			1441	1550	325	1438	1439	493
tC, single (s)	4.2			4.1			7.1	6.5	6.2	7.1	6.5	6.3
tC, 2 stage (s)												
tF (s)	2.3			2.2			3.5	4.0	3.3	3.5	4.0	3.4
p0 queue free %	92			83			0	50	85	0	41	83
cM capacity (veh/h)	879			1156			40	86	716	47	101	564

Direction, Lane #	EB 1	EB 2	EB 3	WB 1	WB 2	WB 3	NB 1	NB 2	SB 1	SB 2
Volume Total	74	325	77	198	493	188	84	152	289	158
Volume Left	74	0	0	198	0	0	84	0	289	0
Volume Right	0	0	77	0	0	188	0	109	0	98
cSH	879	1700	1700	1156	1700	1700	40	302	47	266
Volume to Capacity	0.08	0.19	0.05	0.17	0.29	0.11	2.08	0.50	6.13	0.59
Queue Length 95th (ft)	7	0	0	15	0	0	224	67	Err	87
Control Delay (s)	9.5	0.0	0.0	8.8	0.0	0.0	714.8	31.5	Err	39.3
Lane LOS	A			A			F	D	F	E
Approach Delay (s)	1.5			2.0			274.0		6485.3	
Approach LOS							F		F	

Intersection Summary			
Average Delay		1454.5	
Intersection Capacity Utilization		59.1%	ICU Level of Service B
Analysis Period (min)		15	

HCM Signalized Intersection Capacity Analysis
100: Route 50 & Goshen Road

LCPS (HS 7)
2020 Total Future

Movement	EBL	EBT	EBR	WBL	WBT	WBR	NBL	NBT	NBR	SBL	SBT	SBR
Lane Configurations												
Volume (vph)	11	1441	51	82	654	14	49	10	67	5	1	0
Ideal Flow (vphpl)	1900	1900	1900	1900	1900	1900	1900	1900	1900	1900	1900	1900
Total Lost time (s)	7.0	7.0	7.0	7.0	7.0	7.0		7.0			7.0	
Lane Util. Factor	1.00	0.95	1.00	1.00	0.95	1.00		1.00			1.00	
Frt	1.00	1.00	0.85	1.00	1.00	0.85		0.93			1.00	
Flt Protected	0.95	1.00	1.00	0.95	1.00	1.00		0.98			0.96	
Satd. Flow (prot)	1770	3505	1583	1770	3343	1583		1696			1788	
Flt Permitted	0.95	1.00	1.00	0.95	1.00	1.00		0.87			0.80	
Satd. Flow (perm)	1770	3505	1583	1770	3343	1583		1505			1490	
Peak-hour factor, PHF	0.92	0.92	0.92	0.92	0.92	0.92	0.92	0.92	0.92	0.92	0.92	0.92
Adj. Flow (vph)	12	1566	55	89	711	15	53	11	73	5	1	0
RTOR Reduction (vph)	0	0	15	0	0	5	0	23	0	0	0	0
Lane Group Flow (vph)	12	1566	40	89	711	10	0	114	0	0	6	0
Heavy Vehicles (%)	2%	3%	2%	2%	8%	2%	2%	2%	2%	2%	2%	2%
Turn Type	Prot		Perm	Prot		Perm	Perm			Perm		
Protected Phases	5	2		1	6			8			4	
Permitted Phases			2			6	8			4		
Actuated Green, G (s)	1.2	63.7	63.7	10.8	73.3	73.3		13.7			13.7	
Effective Green, g (s)	1.2	63.7	63.7	10.8	73.3	73.3		13.7			13.7	
Actuated g/C Ratio	0.01	0.58	0.58	0.10	0.67	0.67		0.13			0.13	
Clearance Time (s)	7.0	7.0	7.0	7.0	7.0	7.0		7.0			7.0	
Vehicle Extension (s)	3.0	3.0	3.0	3.0	3.0	3.0		3.0			3.0	
Lane Grp Cap (vph)	19	2045	923	175	2244	1063		189			187	
v/s Ratio Prot	0.01	c0.45		c0.05	0.21							
v/s Ratio Perm			0.03			0.01		c0.08			0.00	
v/c Ratio	0.63	0.77	0.04	0.51	0.32	0.01		0.60			0.03	
Uniform Delay, d1	53.8	17.1	9.7	46.7	7.5	5.9		45.2			41.9	
Progression Factor	1.00	1.00	1.00	1.00	1.00	1.00		1.00			1.00	
Incremental Delay, d2	52.7	1.8	0.0	2.3	0.1	0.0		5.4			0.1	
Delay (s)	106.5	18.9	9.7	49.0	7.6	5.9		50.6			42.0	
Level of Service	F	B	A	D	A	A		D			D	
Approach Delay (s)		19.2			12.1			50.6			42.0	
Approach LOS		B			B			D			D	

Intersection Summary			
HCM Average Control Delay	18.7	HCM Level of Service	B
HCM Volume to Capacity ratio	0.71		
Actuated Cycle Length (s)	109.2	Sum of lost time (s)	21.0
Intersection Capacity Utilization	68.9%	ICU Level of Service	C
Analysis Period (min)	15		

c Critical Lane Group

HCM Signalized Intersection Capacity Analysis
200: Tall Cedars Pkwy & West Spine Road

LCPS (HS 7)
2020 Total Future

Movement	EBL	EBR	NBL	NBT	SBT	SBR
Lane Configurations						
Volume (vph)	155	243	162	1388	621	161
Ideal Flow (vphpl)	1900	1900	1900	1900	1900	1900
Total Lost time (s)	7.0	7.0		7.0	7.0	7.0
Lane Util. Factor	1.00	1.00		0.95	0.95	1.00
Frt	1.00	0.85		1.00	1.00	0.85
Flt Protected	0.95	1.00		0.99	1.00	1.00
Satd. Flow (prot)	1770	1583		3521	3539	1583
Flt Permitted	0.95	1.00		0.76	1.00	1.00
Satd. Flow (perm)	1770	1583		2688	3539	1583
Peak-hour factor, PHF	0.92	0.92	0.92	0.92	0.92	0.92
Adj. Flow (vph)	168	264	176	1509	675	175
RTOR Reduction (vph)	0	223	0	0	0	54
Lane Group Flow (vph)	168	41	0	1685	675	121
Turn Type		Perm	Perm			Perm
Protected Phases	4			2	6	
Permitted Phases		4	2			6
Actuated Green, G (s)	13.9	13.9		62.4	62.4	62.4
Effective Green, g (s)	13.9	13.9		62.4	62.4	62.4
Actuated g/C Ratio	0.15	0.15		0.69	0.69	0.69
Clearance Time (s)	7.0	7.0		7.0	7.0	7.0
Vehicle Extension (s)	3.0	3.0		3.0	3.0	3.0
Lane Grp Cap (vph)	272	244		1857	2446	1094
v/s Ratio Prot	c0.09				0.19	
v/s Ratio Perm		0.03		c0.63		0.08
v/c Ratio	0.62	0.17		0.91	0.28	0.11
Uniform Delay, d1	35.7	33.2		11.6	5.3	4.7
Progression Factor	1.00	1.00		1.00	1.00	1.00
Incremental Delay, d2	4.1	0.3		6.9	0.1	0.0
Delay (s)	39.8	33.5		18.4	5.4	4.7
Level of Service	D	C		B	A	A
Approach Delay (s)	36.0			18.4	5.2	
Approach LOS	D			B	A	

Intersection Summary			
HCM Average Control Delay	17.2	HCM Level of Service	B
HCM Volume to Capacity ratio	0.85		
Actuated Cycle Length (s)	90.3	Sum of lost time (s)	14.0
Intersection Capacity Utilization	86.3%	ICU Level of Service	E
Analysis Period (min)	15		

c Critical Lane Group

Movement	EBL	EBT	EBR	WBL	WBT	WBR	NBL	NBT	NBR	SBL	SBT	SBR
Lane Configurations												
Volume (vph)	396	933	124	102	557	499	64	491	132	463	325	197
Ideal Flow (vphpl)	1900	1900	1900	1900	1900	1900	1900	1900	1900	1900	1900	1900
Total Lost time (s)	7.0	7.0	7.0	7.0	7.0	7.0	7.0	7.0	7.0	7.0	7.0	7.0
Lane Util. Factor	0.97	0.95	1.00	1.00	0.95	1.00	1.00	0.95	1.00	1.00	0.95	1.00
Frt	1.00	1.00	0.85	1.00	1.00	0.85	1.00	1.00	0.85	1.00	1.00	0.85
Flt Protected	0.95	1.00	1.00	0.95	1.00	1.00	0.95	1.00	1.00	0.95	1.00	1.00
Satd. Flow (prot)	3433	3539	1583	1770	3539	1583	1770	3539	1583	1770	3539	1583
Flt Permitted	0.95	1.00	1.00	0.20	1.00	1.00	0.54	1.00	1.00	0.16	1.00	1.00
Satd. Flow (perm)	3433	3539	1583	373	3539	1583	1007	3539	1583	291	3539	1583
Peak-hour factor, PHF	0.92	0.92	0.92	0.92	0.92	0.92	0.92	0.92	0.92	0.92	0.92	0.92
Adj. Flow (vph)	430	1014	135	111	605	542	70	534	143	503	353	214
RTOR Reduction (vph)	0	0	88	0	0	17	0	0	33	0	0	64
Lane Group Flow (vph)	430	1014	47	111	605	525	70	534	110	503	353	150
Turn Type	Prot		pm+ov	pm+pt		pm+ov	pm+pt		pm+ov	pm+pt		pm+ov
Protected Phases	7	4	5	3	8	1	5	2	3	1	6	7
Permitted Phases			4	8		8	2		2	6		6
Actuated Green, G (s)	18.0	33.0	38.0	25.0	20.0	45.0	23.6	18.6	23.6	50.6	38.6	56.6
Effective Green, g (s)	18.0	33.0	38.0	25.0	20.0	45.0	23.6	18.6	23.6	50.6	38.6	56.6
Actuated g/C Ratio	0.16	0.30	0.35	0.23	0.18	0.41	0.22	0.17	0.22	0.46	0.35	0.52
Clearance Time (s)	7.0	7.0	7.0	7.0	7.0	7.0	7.0	7.0	7.0	7.0	7.0	7.0
Vehicle Extension (s)	3.0	3.0	3.0	3.0	3.0	3.0	3.0	3.0	3.0	3.0	3.0	3.0
Lane Grp Cap (vph)	564	1066	650	149	646	751	252	601	442	472	1246	919
v/s Ratio Prot	c0.13	c0.29	0.00	0.03	0.17	0.16	0.01	0.15	0.01	c0.24	0.10	0.03
v/s Ratio Perm			0.03	0.14		0.17	0.05		0.06	c0.25		0.07
v/c Ratio	0.76	0.95	0.07	0.74	0.94	0.70	0.28	0.89	0.25	1.07	0.28	0.16
Uniform Delay, d1	43.8	37.5	24.0	36.9	44.2	26.7	35.1	44.5	35.7	31.4	25.5	14.0
Progression Factor	1.00	1.00	1.00	1.00	1.00	1.00	1.00	1.00	1.00	1.00	1.00	1.00
Incremental Delay, d2	6.0	17.0	0.0	18.2	21.0	2.9	0.6	14.9	0.3	60.0	0.1	0.1
Delay (s)	49.8	54.6	24.0	55.1	65.2	29.6	35.7	59.4	35.9	91.4	25.7	14.1
Level of Service	D	D	C	E	E	C	D	E	D	F	C	B
Approach Delay (s)		50.7			49.0			52.7			54.3	
Approach LOS		D			D			D			D	

Intersection Summary			
HCM Average Control Delay	51.3	HCM Level of Service	D
HCM Volume to Capacity ratio	1.00		
Actuated Cycle Length (s)	109.6	Sum of lost time (s)	21.0
Intersection Capacity Utilization	94.0%	ICU Level of Service	F
Analysis Period (min)	15		
c Critical Lane Group			

Movement	EBL	EBR	NBL	NBT	SBT	SBR
Lane Configurations						
Sign Control	Stop			Stop	Stop	
Volume (vph)	4	19	40	116	109	9
Peak Hour Factor	0.92	0.92	0.92	0.92	0.92	0.92
Hourly flow rate (vph)	4	21	43	126	118	10

Direction, Lane #	EB 1	EB 2	NB 1	NB 2	SB 1	SB 2
Volume Total (vph)	4	21	43	126	118	10
Volume Left (vph)	4	0	43	0	0	0
Volume Right (vph)	0	21	0	0	0	10
Hadj (s)	2.20	-0.07	1.83	0.03	0.03	1.00
Departure Headway (s)	7.4	5.1	6.5	4.7	4.7	5.7
Degree Utilization, x	0.01	0.03	0.08	0.16	0.16	0.02
Capacity (veh/h)	461	658	544	752	741	617
Control Delay (s)	9.3	7.1	8.8	7.4	7.4	7.6
Approach Delay (s)	7.5		7.8		7.4	
Approach LOS	A		A		A	

Intersection Summary			
Delay	7.6		
HCM Level of Service	A		
Intersection Capacity Utilization	18.9%	ICU Level of Service	A
Analysis Period (min)	15		

Movement	EBL	EBR	NBL	NBT	SBT	SBR
Lane Configurations						
Sign Control	Stop			Stop	Stop	
Volume (vph)	23	167	357	133	79	49
Peak Hour Factor	0.92	0.92	0.92	0.92	0.92	0.92
Hourly flow rate (vph)	25	182	388	145	86	53

Direction, Lane #	EB 1	EB 2	NB 1	NB 2	SB 1	SB 2
Volume Total (vph)	25	182	388	145	86	53
Volume Left (vph)	25	0	388	0	0	0
Volume Right (vph)	0	182	0	0	0	53
Hadj (s)	0.53	-0.67	0.53	0.39	0.15	-0.67
Departure Headway (s)	6.7	5.5	5.8	5.7	5.9	5.1
Degree Utilization, x	0.05	0.28	0.63	0.23	0.14	0.08
Capacity (veh/h)	499	608	601	616	578	668
Control Delay (s)	8.8	9.4	16.8	9.1	8.7	7.3
Approach Delay (s)	9.3		14.7		8.2	
Approach LOS	A		B		A	

Intersection Summary			
Delay	12.4		
HCM Level of Service	B		
Intersection Capacity Utilization	36.4%	ICU Level of Service	A
Analysis Period (min)	15		

Movement	EBL	EBT	EBR	WBL	WBT	WBR	NBL	NBT	NBR	SBL	SBT	SBR
Lane Configurations												
Volume (vph)	75	539	69	67	312	368	65	49	192	224	41	51
Ideal Flow (vphpl)	1900	1900	1900	1900	1900	1900	1900	1900	1900	1900	1900	1900
Total Lost time (s)	7.0	7.0	7.0	7.0	7.0	7.0	7.0	7.0	7.0	7.0	7.0	7.0
Lane Util. Factor	1.00	1.00	1.00	1.00	1.00	1.00	1.00	1.00	1.00	1.00	1.00	1.00
Frt	1.00	1.00	0.85	1.00	1.00	0.85	1.00	1.00	0.85	1.00	1.00	0.85
Flt Protected	0.95	1.00	1.00	0.95	1.00	1.00	0.95	1.00	1.00	0.95	1.00	1.00
Satd. Flow (prot)	1357	1863	1583	1770	1863	1583	1770	1863	1583	1770	1863	1442
Flt Permitted	0.48	1.00	1.00	0.18	1.00	1.00	0.73	1.00	1.00	0.42	1.00	1.00
Satd. Flow (perm)	691	1863	1583	341	1863	1583	1356	1863	1583	785	1863	1442
Peak-hour factor, PHF	0.92	0.92	0.92	0.92	0.92	0.92	0.92	0.92	0.92	0.92	0.92	0.92
Adj. Flow (vph)	82	586	75	73	339	400	71	53	209	243	45	55
RTOR Reduction (vph)	0	0	43	0	0	186	0	0	168	0	0	41
Lane Group Flow (vph)	82	586	32	73	339	214	71	53	41	243	45	14
Heavy Vehicles (%)	33%	2%	2%	2%	2%	2%	2%	2%	2%	2%	2%	12%
Turn Type	pm+pt		pm+ov	pm+pt		pm+ov	pm+pt		pm+ov	pm+pt		pm+ov
Protected Phases	5	2	3	1	6	7	3	8	1	7	4	5
Permitted Phases	2		2	6		6	8		8	4		4
Actuated Green, G (s)	36.7	33.6	37.4	38.7	34.6	47.2	13.6	9.8	13.9	29.4	18.6	21.7
Effective Green, g (s)	36.7	33.6	37.4	38.7	34.6	47.2	13.6	9.8	13.9	29.4	18.6	21.7
Actuated g/C Ratio	0.42	0.38	0.42	0.44	0.39	0.54	0.15	0.11	0.16	0.33	0.21	0.25
Clearance Time (s)	7.0	7.0	7.0	7.0	7.0	7.0	7.0	7.0	7.0	7.0	7.0	7.0
Vehicle Extension (s)	3.0	3.0	3.0	3.0	3.0	3.0	3.0	3.0	3.0	3.0	3.0	3.0
Lane Grp Cap (vph)	311	711	798	216	732	974	227	207	376	403	393	470
v/s Ratio Prot	0.01	c0.31	0.00	c0.02	0.18	0.03	0.01	0.03	0.01	c0.09	0.02	0.00
v/s Ratio Perm	0.10		0.02	0.13		0.10	0.03		0.02	c0.12		0.01
v/c Ratio	0.26	0.82	0.04	0.34	0.46	0.22	0.31	0.26	0.11	0.60	0.11	0.03
Uniform Delay, d1	16.3	24.6	14.8	17.0	19.9	10.8	32.8	35.8	31.8	23.0	28.1	25.2
Progression Factor	1.00	1.00	1.00	1.00	1.00	1.00	1.00	1.00	1.00	1.00	1.00	1.00
Incremental Delay, d2	0.5	7.7	0.0	0.9	0.5	0.1	0.8	0.7	0.1	2.5	0.1	0.0
Delay (s)	16.7	32.3	14.9	17.9	20.3	10.9	33.6	36.5	31.9	25.5	28.2	25.2
Level of Service	B	C	B	B	C	B	C	D	C	C	C	C
Approach Delay (s)		28.8			15.5			33.0			25.8	
Approach LOS		C			B			C			C	

Intersection Summary			
HCM Average Control Delay	24.1	HCM Level of Service	C
HCM Volume to Capacity ratio	0.68		
Actuated Cycle Length (s)	88.1	Sum of lost time (s)	21.0
Intersection Capacity Utilization	70.2%	ICU Level of Service	C
Analysis Period (min)	15		

c Critical Lane Group

HCM Signalized Intersection Capacity Analysis
100: Route 50 & Goshen Road

LCPS (HS 7)
2015 Total Future

Movement	EBL	EBT	EBR	WBL	WBT	WBR	NBL	NBT	NBR	SBL	SBT	SBR
Lane Configurations												
Volume (vph)	1	706	43	52	1806	5	37	1	64	1	9	5
Ideal Flow (vphpl)	1900	1900	1900	1900	1900	1900	1900	1900	1900	1900	1900	1900
Total Lost time (s)	7.0	7.0	7.0	7.0	7.0	7.0		7.0			7.0	
Lane Util. Factor	1.00	0.95	1.00	1.00	0.95	1.00		1.00			1.00	
Frt	1.00	1.00	0.85	1.00	1.00	0.85		0.91			0.96	
Flt Protected	0.95	1.00	1.00	0.95	1.00	1.00		0.98			1.00	
Satd. Flow (prot)	1770	3505	1583	1770	3343	1583		1668			1779	
Flt Permitted	0.95	1.00	1.00	0.95	1.00	1.00		0.87			0.98	
Satd. Flow (perm)	1770	3505	1583	1770	3343	1583		1485			1747	
Peak-hour factor, PHF	0.92	0.92	0.92	0.92	0.92	0.92	0.92	0.92	0.92	0.92	0.92	0.92
Adj. Flow (vph)	1	767	47	57	1963	5	40	1	70	1	10	5
RTOR Reduction (vph)	0	0	19	0	0	1	0	34	0	0	4	0
Lane Group Flow (vph)	1	767	28	57	1963	4	0	77	0	0	12	0
Heavy Vehicles (%)	2%	3%	2%	2%	8%	2%	3%	2%	2%	2%	2%	2%
Turn Type	Prot		Perm	Prot		Perm	Perm			Perm		
Protected Phases	5	2		1	6			8			4	
Permitted Phases			2			6	8			4		
Actuated Green, G (s)	0.7	61.4	61.4	8.4	69.1	69.1		12.8			12.8	
Effective Green, g (s)	0.7	61.4	61.4	8.4	69.1	69.1		12.8			12.8	
Actuated g/C Ratio	0.01	0.59	0.59	0.08	0.67	0.67		0.12			0.12	
Clearance Time (s)	7.0	7.0	7.0	7.0	7.0	7.0		7.0			7.0	
Vehicle Extension (s)	3.0	3.0	3.0	3.0	3.0	3.0		3.0			3.0	
Lane Grp Cap (vph)	12	2077	938	144	2230	1056		183			216	
v/s Ratio Prot	0.00	0.22		c0.03	c0.59							
v/s Ratio Perm			0.02			0.00		c0.05			0.01	
v/c Ratio	0.08	0.37	0.03	0.40	0.88	0.00		0.42			0.05	
Uniform Delay, d1	51.1	11.0	8.7	45.2	13.9	5.8		42.0			40.1	
Progression Factor	1.00	1.00	1.00	1.00	1.00	1.00		1.00			1.00	
Incremental Delay, d2	3.0	0.1	0.0	1.8	4.4	0.0		1.6			0.1	
Delay (s)	54.1	11.1	8.8	47.0	18.3	5.8		43.5			40.2	
Level of Service	D	B	A	D	B	A		D			D	
Approach Delay (s)		11.0			19.1			43.5			40.2	
Approach LOS		B			B			D			D	

Intersection Summary			
HCM Average Control Delay	17.9	HCM Level of Service	B
HCM Volume to Capacity ratio	0.83		
Actuated Cycle Length (s)	103.6	Sum of lost time (s)	21.0
Intersection Capacity Utilization	74.3%	ICU Level of Service	D
Analysis Period (min)	15		

c Critical Lane Group

HCM Signalized Intersection Capacity Analysis
200: Tall Cedars Pkwy & West Spine Road

LCPS (HS 7)
2015 Total Future

Movement	EBL	EBR	NBL	NBT	SBT	SBR
Lane Configurations						
Volume (vph)	126	210	151	789	1382	147
Ideal Flow (vphpl)	1900	1900	1900	1900	1900	1900
Total Lost time (s)	7.0	7.0		7.0	7.0	7.0
Lane Util. Factor	1.00	1.00		0.95	0.95	1.00
Frt	1.00	0.85		1.00	1.00	0.85
Flt Protected	0.95	1.00		0.99	1.00	1.00
Satd. Flow (prot)	1770	1583		3511	3539	1583
Flt Permitted	0.95	1.00		0.51	1.00	1.00
Satd. Flow (perm)	1770	1583		1810	3539	1583
Peak-hour factor, PHF	0.92	0.92	0.92	0.92	0.92	0.92
Adj. Flow (vph)	137	228	164	858	1502	160
RTOR Reduction (vph)	0	57	0	0	0	55
Lane Group Flow (vph)	137	171	0	1022	1502	105
Turn Type		Perm	Perm			Perm
Protected Phases	4			2	6	
Permitted Phases		4	2			6
Actuated Green, G (s)	13.2	13.2		51.6	51.6	51.6
Effective Green, g (s)	13.2	13.2		51.6	51.6	51.6
Actuated g/C Ratio	0.17	0.17		0.65	0.65	0.65
Clearance Time (s)	7.0	7.0		7.0	7.0	7.0
Vehicle Extension (s)	3.0	3.0		3.0	3.0	3.0
Lane Grp Cap (vph)	296	265		1185	2317	1037
v/s Ratio Prot	0.08				0.42	
v/s Ratio Perm		c0.11		c0.56		0.07
v/c Ratio	0.46	0.64		1.09dl	0.65	0.10
Uniform Delay, d1	29.6	30.6		10.8	8.2	5.0
Progression Factor	1.00	1.00		1.00	1.00	1.00
Incremental Delay, d2	1.1	5.3		6.7	0.6	0.0
Delay (s)	30.7	35.9		17.5	8.8	5.1
Level of Service	C	D		B	A	A
Approach Delay (s)	34.0			17.5	8.4	
Approach LOS	C			B	A	

Intersection Summary			
HCM Average Control Delay	14.5	HCM Level of Service	B
HCM Volume to Capacity ratio	0.82		
Actuated Cycle Length (s)	78.8	Sum of lost time (s)	14.0
Intersection Capacity Utilization	88.9%	ICU Level of Service	E
Analysis Period (min)	15		

dl Defacto Left Lane. Recode with 1 though lane as a left lane.
c Critical Lane Group

HCM Signalized Intersection Capacity Analysis
300: Braddock Road & Gum Spring Road

LCPS (HS 7)
2015 Total Future

Movement	EBL	EBT	EBR	WBL	WBT	WBR	NBL	NBT	NBR	SBL	SBT	SBR
Lane Configurations												
Volume (vph)	287	475	95	159	583	329	107	361	72	377	574	349
Ideal Flow (vphpl)	1900	1900	1900	1900	1900	1900	1900	1900	1900	1900	1900	1900
Total Lost time (s)	7.0	7.0	7.0	7.0	7.0	7.0	7.0	7.0	7.0	7.0	7.0	7.0
Lane Util. Factor	0.97	0.95	1.00	1.00	0.95	1.00	1.00	0.95	1.00	1.00	0.95	1.00
Frt	1.00	1.00	0.85	1.00	1.00	0.85	1.00	1.00	0.85	1.00	1.00	0.85
Flt Protected	0.95	1.00	1.00	0.95	1.00	1.00	0.95	1.00	1.00	0.95	1.00	1.00
Satd. Flow (prot)	3433	3539	1583	1770	3539	1583	1770	3539	1583	1770	3539	1583
Flt Permitted	0.95	1.00	1.00	0.36	1.00	1.00	0.42	1.00	1.00	0.27	1.00	1.00
Satd. Flow (perm)	3433	3539	1583	671	3539	1583	774	3539	1583	507	3539	1583
Peak-hour factor, PHF	0.92	0.92	0.92	0.92	0.92	0.92	0.92	0.92	0.92	0.92	0.92	0.92
Adj. Flow (vph)	312	516	103	173	634	358	116	392	78	410	624	379
RTOR Reduction (vph)	0	0	70	0	0	33	0	0	56	0	0	75
Lane Group Flow (vph)	312	516	33	173	634	325	116	392	22	410	624	304
Turn Type	Prot		pm+ov	pm+pt		pm+ov	pm+pt		pm+ov	pm+pt		pm+ov
Protected Phases	7	4	5	3	8	1	5	2	3	1	6	7
Permitted Phases			4	8		8	2		2	6		6
Actuated Green, G (s)	13.8	23.5	31.9	33.3	21.5	42.9	24.4	16.0	27.8	44.4	29.0	42.8
Effective Green, g (s)	13.8	23.5	31.9	33.3	21.5	42.9	24.4	16.0	27.8	44.4	29.0	42.8
Actuated g/C Ratio	0.14	0.23	0.32	0.33	0.21	0.43	0.24	0.16	0.28	0.44	0.29	0.43
Clearance Time (s)	7.0	7.0	7.0	7.0	7.0	7.0	7.0	7.0	7.0	7.0	7.0	7.0
Vehicle Extension (s)	3.0	3.0	3.0	3.0	3.0	3.0	3.0	3.0	3.0	3.0	3.0	3.0
Lane Grp Cap (vph)	470	826	612	351	756	784	271	562	547	492	1019	783
v/s Ratio Prot	c0.09	0.15	0.00	0.06	c0.18	0.09	0.04	0.11	0.00	c0.18	0.18	0.05
v/s Ratio Perm			0.02	0.11		0.12	0.07		0.01	c0.19		0.14
v/c Ratio	0.66	0.62	0.05	0.49	0.84	0.41	0.43	0.70	0.04	0.83	0.61	0.39
Uniform Delay, d1	41.2	34.6	23.9	25.1	37.9	20.1	30.9	40.1	26.7	21.5	31.0	19.9
Progression Factor	1.00	1.00	1.00	1.00	1.00	1.00	1.00	1.00	1.00	1.00	1.00	1.00
Incremental Delay, d2	3.5	1.5	0.0	1.1	8.1	0.4	1.1	3.8	0.0	11.5	1.1	0.3
Delay (s)	44.8	36.1	23.9	26.2	46.0	20.5	32.0	43.8	26.7	33.1	32.1	20.3
Level of Service	D	D	C	C	D	C	C	D	C	C	C	C
Approach Delay (s)		37.7			35.3			39.2			29.2	
Approach LOS		D			D			D			C	

Intersection Summary			
HCM Average Control Delay	34.3	HCM Level of Service	C
HCM Volume to Capacity ratio	0.77		
Actuated Cycle Length (s)	100.7	Sum of lost time (s)	21.0
Intersection Capacity Utilization	78.5%	ICU Level of Service	D
Analysis Period (min)	15		
c Critical Lane Group			

HCM Unsignalized Intersection Capacity Analysis
600: Road A & North Star Blvd.

LCPS (HS 7)
2015 Total Future

Movement	EBL	EBR	NBL	NBT	SBT	SBR
Lane Configurations						
Sign Control	Stop			Stop	Stop	
Volume (vph)	6	33	21	103	134	3
Peak Hour Factor	0.92	0.92	0.92	0.92	0.92	0.92
Hourly flow rate (vph)	7	36	23	112	146	3

Direction, Lane #	EB 1	EB 2	NB 1	NB 2	SB 1	SB 2
Volume Total (vph)	7	36	23	112	146	3
Volume Left (vph)	7	0	23	0	0	0
Volume Right (vph)	0	36	0	0	0	3
Hadj (s)	2.20	0.90	2.20	0.03	0.03	1.00
Departure Headway (s)	7.4	6.1	7.0	4.8	4.8	5.8
Degree Utilization, x	0.01	0.06	0.04	0.15	0.19	0.01
Capacity (veh/h)	463	562	507	736	734	611
Control Delay (s)	9.3	8.3	9.1	7.4	7.7	7.6
Approach Delay (s)	8.4		7.7		7.7	
Approach LOS	A		A		A	

Intersection Summary			
Delay	7.8		
HCM Level of Service	A		
Intersection Capacity Utilization	23.7%	ICU Level of Service	A
Analysis Period (min)	15		

Movement	EBL	EBR	NBL	NBT	SBT	SBR
Lane Configurations						
Sign Control	Stop			Stop	Stop	
Volume (vph)	41	273	146	83	145	23
Peak Hour Factor	0.92	0.92	0.92	0.92	0.92	0.92
Hourly flow rate (vph)	45	297	159	90	158	25

Direction, Lane #	EB 1	EB 2	NB 1	NB 2	SB 1	SB 2
Volume Total (vph)	45	297	159	90	158	25
Volume Left (vph)	45	0	159	0	0	0
Volume Right (vph)	0	297	0	0	0	25
Hadj (s)	0.53	-0.67	0.53	0.14	0.36	-0.67
Departure Headway (s)	6.2	5.0	6.2	5.8	6.1	5.1
Degree Utilization, x	0.08	0.41	0.27	0.15	0.27	0.04
Capacity (veh/h)	547	684	555	588	558	661
Control Delay (s)	8.5	10.3	10.3	8.6	10.1	7.1
Approach Delay (s)	10.1		9.7		9.7	
Approach LOS	B		A		A	

Intersection Summary			
Delay	9.9		
HCM Level of Service	A		
Intersection Capacity Utilization	31.2%	ICU Level of Service	A
Analysis Period (min)	15		

Movement	EBL	EBT	EBR	WBL	WBT	WBR	NBL	NBT	NBR	SBL	SBT	SBR
Lane Configurations												
Volume (vph)	68	299	71	182	454	173	77	40	100	266	55	90
Ideal Flow (vphpl)	1900	1900	1900	1900	1900	1900	1900	1900	1900	1900	1900	1900
Total Lost time (s)	7.0	7.0	7.0	7.0	7.0	7.0	7.0	7.0	7.0	7.0	7.0	7.0
Lane Util. Factor	1.00	1.00	1.00	1.00	1.00	1.00	1.00	1.00	1.00	1.00	1.00	1.00
Frt	1.00	1.00	0.85	1.00	1.00	0.85	1.00	1.00	0.85	1.00	1.00	0.85
Flt Protected	0.95	1.00	1.00	0.95	1.00	1.00	0.95	1.00	1.00	0.95	1.00	1.00
Satd. Flow (prot)	1656	1863	1583	1770	1863	1583	1770	1863	1583	1770	1863	1495
Flt Permitted	0.28	1.00	1.00	0.33	1.00	1.00	0.72	1.00	1.00	0.42	1.00	1.00
Satd. Flow (perm)	490	1863	1583	616	1863	1583	1337	1863	1583	785	1863	1495
Peak-hour factor, PHF	0.92	0.92	0.92	0.92	0.92	0.92	0.92	0.92	0.92	0.92	0.92	0.92
Adj. Flow (vph)	74	325	77	198	493	188	84	43	109	289	60	98
RTOR Reduction (vph)	0	0	52	0	0	87	0	0	86	0	0	68
Lane Group Flow (vph)	74	325	25	198	493	101	84	43	23	289	60	30
Heavy Vehicles (%)	9%	2%	2%	2%	2%	2%	2%	2%	2%	2%	2%	8%
Turn Type	pm+pt		pm+ov	pm+pt		pm+ov	pm+pt		pm+ov	pm+pt		pm+ov
Protected Phases	5	2	3	1	6	7	3	8	1	7	4	5
Permitted Phases	2		2	6		6	8		8	4		4
Actuated Green, G (s)	28.5	24.7	29.3	38.7	29.8	47.9	14.2	9.6	18.5	34.7	23.1	26.9
Effective Green, g (s)	28.5	24.7	29.3	38.7	29.8	47.9	14.2	9.6	18.5	34.7	23.1	26.9
Actuated g/C Ratio	0.32	0.28	0.33	0.43	0.33	0.54	0.16	0.11	0.21	0.39	0.26	0.30
Clearance Time (s)	7.0	7.0	7.0	7.0	7.0	7.0	7.0	7.0	7.0	7.0	7.0	7.0
Vehicle Extension (s)	3.0	3.0	3.0	3.0	3.0	3.0	3.0	3.0	3.0	3.0	3.0	3.0
Lane Grp Cap (vph)	206	515	643	382	622	973	235	200	452	505	482	568
v/s Ratio Prot	0.02	0.17	0.00	c0.05	c0.26	0.02	0.02	0.02	0.00	c0.12	0.03	0.00
v/s Ratio Perm	0.10		0.01	0.17		0.04	0.04		0.01	c0.11		0.02
v/c Ratio	0.36	0.63	0.04	0.52	0.79	0.10	0.36	0.21	0.05	0.57	0.12	0.05
Uniform Delay, d1	22.3	28.3	20.4	17.2	27.0	10.2	33.2	36.4	28.4	20.3	25.4	22.1
Progression Factor	1.00	1.00	1.00	1.00	1.00	1.00	1.00	1.00	1.00	1.00	1.00	1.00
Incremental Delay, d2	1.1	2.5	0.0	1.2	6.9	0.0	0.9	0.5	0.0	1.6	0.1	0.0
Delay (s)	23.4	30.8	20.4	18.4	33.8	10.2	34.1	36.9	28.4	21.9	25.5	22.2
Level of Service	C	C	C	B	C	B	C	D	C	C	C	C
Approach Delay (s)		28.0			25.3			32.0			22.4	
Approach LOS		C			C			C			C	

Intersection Summary			
HCM Average Control Delay	26.1	HCM Level of Service	C
HCM Volume to Capacity ratio	0.68		
Actuated Cycle Length (s)	89.3	Sum of lost time (s)	21.0
Intersection Capacity Utilization	66.6%	ICU Level of Service	C
Analysis Period (min)	15		

c Critical Lane Group

APPENDIX N-3

INTERSECTION CAPACITY ANALYSIS RESULTS– FUTURE CONDITIONS WITH PROPOSED DEVELOPMENT (2020) – ES PEAK, ALTERNATIVE 1

HCM Signalized Intersection Capacity Analysis
100: Route 50 & Goshen Road

LCPS (HS 7)
2020 Total Future

Movement	EBL	EBT	EBR	WBL	WBT	WBR	NBL	NBT	NBR	SBL	SBT	SBR
Lane Configurations												
Volume (vph)	17	1723	23	52	591	15	35	17	49	6	1	0
Ideal Flow (vphpl)	1900	1900	1900	1900	1900	1900	1900	1900	1900	1900	1900	1900
Total Lost time (s)	7.0	7.0	7.0	7.0	7.0	7.0		7.0			7.0	
Lane Util. Factor	1.00	0.95	1.00	1.00	0.95	1.00		1.00			1.00	
Frt	1.00	1.00	0.85	1.00	1.00	0.85		0.93			1.00	
Flt Protected	0.95	1.00	1.00	0.95	1.00	1.00		0.98			0.96	
Satd. Flow (prot)	1770	3505	1538	1752	3343	1583		1711			1785	
Flt Permitted	0.95	1.00	1.00	0.95	1.00	1.00		0.88			0.78	
Satd. Flow (perm)	1770	3505	1538	1752	3343	1583		1534			1448	
Peak-hour factor, PHF	0.92	0.92	0.92	0.92	0.92	0.92	0.92	0.92	0.92	0.92	0.92	0.92
Adj. Flow (vph)	18	1873	25	57	642	16	38	18	53	7	1	0
RTOR Reduction (vph)	0	0	5	0	0	5	0	19	0	0	0	0
Lane Group Flow (vph)	18	1873	20	57	642	11	0	90	0	0	8	0
Heavy Vehicles (%)	2%	3%	5%	3%	8%	2%	2%	2%	2%	2%	2%	2%
Turn Type	Prot		Perm	Prot		Perm	Perm			Perm		
Protected Phases	5	2		1	6			8			4	
Permitted Phases			2			6	8			4		
Actuated Green, G (s)	2.6	79.2	79.2	7.6	84.2	84.2		13.4			13.4	
Effective Green, g (s)	2.6	79.2	79.2	7.6	84.2	84.2		13.4			13.4	
Actuated g/C Ratio	0.02	0.65	0.65	0.06	0.69	0.69		0.11			0.11	
Clearance Time (s)	7.0	7.0	7.0	7.0	7.0	7.0		7.0			7.0	
Vehicle Extension (s)	3.0	3.0	3.0	3.0	3.0	3.0		3.0			3.0	
Lane Grp Cap (vph)	38	2290	1005	110	2322	1100		170			160	
v/s Ratio Prot	0.01	c0.53		c0.03	c0.19							
v/s Ratio Perm			0.01			0.01		c0.06			0.01	
v/c Ratio	0.47	0.82	0.02	0.52	0.28	0.01		0.53			0.05	
Uniform Delay, d1	58.6	15.6	7.4	55.0	7.0	5.7		50.9			48.2	
Progression Factor	1.00	1.00	1.00	1.00	1.00	1.00		1.00			1.00	
Incremental Delay, d2	9.0	2.4	0.0	4.1	0.1	0.0		3.2			0.1	
Delay (s)	67.7	18.0	7.4	59.1	7.1	5.7		54.1			48.3	
Level of Service	E	B	A	E	A	A		D			D	
Approach Delay (s)		18.3			11.2			54.1			48.3	
Approach LOS		B			B			D			D	

Intersection Summary			
HCM Average Control Delay	18.0	HCM Level of Service	B
HCM Volume to Capacity ratio	0.82		
Actuated Cycle Length (s)	121.2	Sum of lost time (s)	28.0
Intersection Capacity Utilization	64.8%	ICU Level of Service	C
Analysis Period (min)	15		

c Critical Lane Group

HCM Unsignalized Intersection Capacity Analysis
200: Tall Cedars Pkwy & West Spine Road

LCPS (HS 7)
2020 Total Future

Movement	EBL	EBR	NBL	NBT	SBT	SBR
Lane Configurations						
Volume (veh/h)	164	247	194	1299	529	169
Sign Control	Stop			Free	Free	
Grade	0%			0%	0%	
Peak Hour Factor	0.92	0.92	0.92	0.92	0.92	0.92
Hourly flow rate (vph)	178	268	211	1412	575	184
Pedestrians						
Lane Width (ft)						
Walking Speed (ft/s)						
Percent Blockage						
Right turn flare (veh)						
Median type				None	None	
Median storage veh)						
Upstream signal (ft)						
pX, platoon unblocked						
vC, conflicting volume	1703	288	575			
vC1, stage 1 conf vol						
vC2, stage 2 conf vol						
vCu, unblocked vol	1703	288	575			
tC, single (s)	6.8	6.9	4.1			
tC, 2 stage (s)						
tF (s)	3.5	3.3	2.2			
p0 queue free %	0	62	79			
cM capacity (veh/h)	65	709	994			

Direction, Lane #	EB 1	EB 2	NB 1	NB 2	SB 1	SB 2	SB 3
Volume Total	178	268	682	941	288	288	184
Volume Left	178	0	211	0	0	0	0
Volume Right	0	268	0	0	0	0	184
cSH	65	709	994	1700	1700	1700	1700
Volume to Capacity	2.74	0.38	0.21	0.55	0.17	0.17	0.11
Queue Length 95th (ft)	447	44	20	0	0	0	0
Control Delay (s)	921.3	13.1	4.9	0.0	0.0	0.0	0.0
Lane LOS	F	B	A				
Approach Delay (s)	375.5		2.1		0.0		
Approach LOS	F						

Intersection Summary			
Average Delay	60.5		
Intersection Capacity Utilization	75.2%	ICU Level of Service	D
Analysis Period (min)	15		

HCM Signalized Intersection Capacity Analysis
300: Braddock Road & Gum Spring Road

LCPS (HS 7)
2020 Total Future

Movement	EBL	EBT	EBR	WBL	WBT	WBR	NBL	NBT	NBR	SBL	SBT	SBR
Lane Configurations												
Volume (vph)	379	674	108	80	258	371	73	521	168	395	296	186
Ideal Flow (vphpl)	1900	1900	1900	1900	1900	1900	1900	1900	1900	1900	1900	1900
Total Lost time (s)	7.0	7.0	7.0	7.0	7.0	7.0	7.0	7.0		7.0	7.0	7.0
Lane Util. Factor	1.00	1.00	1.00	1.00	1.00	1.00	1.00	0.95		1.00	0.95	1.00
Frt	1.00	1.00	0.85	1.00	1.00	0.85	1.00	0.96		1.00	1.00	0.85
Flt Protected	0.95	1.00	1.00	0.95	1.00	1.00	0.95	1.00		0.95	1.00	1.00
Satd. Flow (prot)	1770	1863	1583	1770	1863	1583	1770	3410		1770	3539	1583
Flt Permitted	0.49	1.00	1.00	0.10	1.00	1.00	0.56	1.00		0.15	1.00	1.00
Satd. Flow (perm)	920	1863	1583	182	1863	1583	1037	3410		287	3539	1583
Peak-hour factor, PHF	0.92	0.92	0.92	0.92	0.92	0.92	0.92	0.92	0.92	0.92	0.92	0.92
Adj. Flow (vph)	412	733	117	87	280	403	79	566	183	429	322	202
RTOR Reduction (vph)	0	0	68	0	0	14	0	28	0	0	0	134
Lane Group Flow (vph)	412	733	49	87	280	389	79	721	0	429	322	68
Turn Type	pm+pt		pm+ov	pm+pt		pm+ov	pm+pt			pm+pt		pm+ov
Protected Phases	7	4	5	3	8	1	5	2		1	6	7
Permitted Phases	4		4	8		8	2			6		6
Actuated Green, G (s)	47.0	42.0	46.0	45.0	41.0	58.0	23.0	19.0		43.0	32.0	37.0
Effective Green, g (s)	47.0	42.0	46.0	45.0	41.0	58.0	23.0	19.0		43.0	32.0	37.0
Actuated g/C Ratio	0.43	0.38	0.42	0.41	0.37	0.53	0.21	0.17		0.39	0.29	0.34
Clearance Time (s)	7.0	7.0	7.0	7.0	7.0	7.0	7.0	7.0		7.0	7.0	7.0
Vehicle Extension (s)	3.0	3.0	3.0	3.0	3.0	3.0	3.0	3.0		3.0	3.0	3.0
Lane Grp Cap (vph)	432	711	763	132	694	935	243	589		341	1030	633
v/s Ratio Prot	c0.04	c0.39	0.00	0.02	0.15	0.06	0.01	0.21		c0.19	0.09	0.00
v/s Ratio Perm	0.36		0.03	0.25		0.18	0.06			c0.30		0.04
v/c Ratio	0.95	1.03	0.06	0.66	0.40	0.42	0.33	1.22		1.26	0.31	0.11
Uniform Delay, d1	31.3	34.0	19.1	26.7	25.5	15.7	36.0	45.5		31.1	30.4	25.1
Progression Factor	1.00	1.00	1.00	1.00	1.00	1.00	1.00	1.00		1.00	1.00	1.00
Incremental Delay, d2	31.5	41.9	0.0	11.3	0.4	0.3	0.8	115.3		137.8	0.2	0.1
Delay (s)	62.8	75.9	19.2	38.0	25.9	16.0	36.8	160.8		168.9	30.6	25.2
Level of Service	E	E	B	D	C	B	D	F		F	C	C
Approach Delay (s)		66.4			22.1			149.0			91.7	
Approach LOS		E			C			F			F	

Intersection Summary			
HCM Average Control Delay	81.7	HCM Level of Service	F
HCM Volume to Capacity ratio	1.01		
Actuated Cycle Length (s)	110.0	Sum of lost time (s)	14.0
Intersection Capacity Utilization	104.9%	ICU Level of Service	G
Analysis Period (min)	15		
c Critical Lane Group			

HCM Unsignalized Intersection Capacity Analysis
600: Road A & North Star Blvd.

LCPS (HS 7)
2020 Total Future

Movement	EBL	EBR	NBL	NBT	SBT	SBR
Lane Configurations						
Sign Control	Stop			Stop	Stop	
Volume (vph)	2	40	37	104	90	5
Peak Hour Factor	0.92	0.92	0.92	0.92	0.92	0.92
Hourly flow rate (vph)	2	43	40	113	98	5

Direction, Lane #	EB 1	EB 2	NB 1	NB 2	SB 1	SB 2
Volume Total (vph)	2	43	40	113	98	5
Volume Left (vph)	2	0	40	0	0	0
Volume Right (vph)	0	43	0	0	0	5
Hadj (s)	2.20	-0.39	1.83	0.03	0.03	1.00
Departure Headway (s)	7.3	4.7	6.5	4.7	4.8	5.7
Degree Utilization, x	0.00	0.06	0.07	0.15	0.13	0.01
Capacity (veh/h)	468	719	541	745	733	611
Control Delay (s)	9.1	6.8	8.8	7.4	7.3	7.6
Approach Delay (s)	6.9		7.7		7.3	
Approach LOS	A		A		A	

Intersection Summary			
Delay	7.5		
HCM Level of Service	A		
Intersection Capacity Utilization	18.7%	ICU Level of Service	A
Analysis Period (min)	15		

Movement	EBL	EBR	NBL	NBT	SBT	SBR
Lane Configurations						
Sign Control	Stop			Stop	Stop	
Volume (vph)	46	156	218	95	60	70
Peak Hour Factor	0.92	0.92	0.92	0.92	0.92	0.92
Hourly flow rate (vph)	50	170	237	103	65	76

Direction, Lane #	EB 1	EB 2	NB 1	NB 2	SB 1	SB 2
Volume Total (vph)	50	170	237	103	65	76
Volume Left (vph)	50	0	237	0	0	0
Volume Right (vph)	0	170	0	0	0	76
Hadj (s)	0.53	-0.67	0.53	0.51	0.20	-0.67
Departure Headway (s)	6.2	5.0	5.8	5.8	5.7	4.8
Degree Utilization, x	0.09	0.24	0.38	0.17	0.10	0.10
Capacity (veh/h)	540	668	604	602	598	704
Control Delay (s)	8.6	8.4	11.1	8.7	8.2	7.2
Approach Delay (s)	8.5		10.4		7.6	
Approach LOS	A		B		A	

Intersection Summary			
Delay	9.2		
HCM Level of Service	A		
Intersection Capacity Utilization	28.7%	ICU Level of Service	A
Analysis Period (min)	15		

Movement	EBL	EBT	EBR	WBL	WBT	WBR	NBL	NBT	NBR	SBL	SBT	SBR
Lane Configurations												
Volume (veh/h)	210	460	66	63	214	71	62	46	182	83	38	162
Sign Control		Free			Free			Stop			Stop	
Grade		0%			0%			0%			0%	
Peak Hour Factor	0.92	0.92	0.92	0.92	0.92	0.92	0.92	0.92	0.92	0.92	0.92	0.92
Hourly flow rate (vph)	228	500	72	68	233	77	67	50	198	90	41	176
Pedestrians												
Lane Width (ft)												
Walking Speed (ft/s)												
Percent Blockage												
Right turn flare (veh)									12			12
Median type		None			None							
Median storage veh)												
Upstream signal (ft)												
pX, platoon unblocked												
vC, conflicting volume	310			572			1435	1403	500	1450	1398	233
vC1, stage 1 conf vol												
vC2, stage 2 conf vol												
vCu, unblocked vol	310			572			1435	1403	500	1450	1398	233
tC, single (s)	4.2			4.1			7.1	6.5	6.2	7.1	6.5	6.2
tC, 2 stage (s)												
tF (s)	2.3			2.2			3.5	4.0	3.3	3.5	4.0	3.3
p0 queue free %	81			93			0	53	65	0	61	78
cM capacity (veh/h)	1196			1001			50	105	571	37	106	802

Direction, Lane #	EB 1	EB 2	EB 3	WB 1	WB 2	WB 3	NB 1	NB 2	SB 1	SB 2
Volume Total	228	500	72	68	233	77	67	248	90	217
Volume Left	228	0	0	68	0	0	67	0	90	0
Volume Right	0	0	72	0	0	77	0	198	0	176
cSH	1196	1700	1700	1001	1700	1700	50	522	37	558
Volume to Capacity	0.19	0.29	0.04	0.07	0.14	0.05	1.35	0.47	2.45	0.39
Queue Length 95th (ft)	18	0	0	5	0	0	156	63	251	46
Control Delay (s)	8.7	0.0	0.0	8.9	0.0	0.0	380.4	25.2	891.6	19.9
Lane LOS	A			A			F	D	F	C
Approach Delay (s)	2.5			1.6			101.1		275.6	
Approach LOS							F		F	

Intersection Summary			
Average Delay	66.2		
Intersection Capacity Utilization	50.1%	ICU Level of Service	A
Analysis Period (min)	15		

HCM Signalized Intersection Capacity Analysis
100: Route 50 & Goshen Road

LCPS (HS 7)
2020 Total Future

Movement	EBL	EBT	EBR	WBL	WBT	WBR	NBL	NBT	NBR	SBL	SBT	SBR
Lane Configurations												
Volume (vph)	5	715	33	42	1279	2	23	1	43	1	4	2
Ideal Flow (vphpl)	1900	1900	1900	1900	1900	1900	1900	1900	1900	1900	1900	1900
Total Lost time (s)	7.0	7.0	7.0	7.0	7.0	7.0		7.0			7.0	
Lane Util. Factor	1.00	0.95	1.00	1.00	0.95	1.00		1.00			1.00	
Frt	1.00	1.00	0.85	1.00	1.00	0.85		0.91			0.96	
Flt Protected	0.95	1.00	1.00	0.95	1.00	1.00		0.98			0.99	
Satd. Flow (prot)	1770	3505	1583	1770	3343	1583		1672			1778	
Flt Permitted	0.95	1.00	1.00	0.95	1.00	1.00		0.88			0.94	
Satd. Flow (perm)	1770	3505	1583	1770	3343	1583		1503			1677	
Peak-hour factor, PHF	0.92	0.92	0.92	0.92	0.92	0.92	0.92	0.92	0.92	0.92	0.92	0.92
Adj. Flow (vph)	5	777	36	46	1390	2	25	1	47	1	4	2
RTOR Reduction (vph)	0	0	19	0	0	0	0	36	0	0	2	0
Lane Group Flow (vph)	5	777	17	46	1390	2	0	37	0	0	5	0
Heavy Vehicles (%)	2%	3%	2%	2%	8%	2%	2%	2%	2%	2%	2%	2%
Turn Type	Prot		Perm	Prot		Perm	Perm			Perm		
Protected Phases	5	2		1	6			8			4	
Permitted Phases			2			6	8			4		
Actuated Green, G (s)	0.8	30.7	30.7	4.5	34.4	34.4		7.7			7.7	
Effective Green, g (s)	0.8	30.7	30.7	4.5	34.4	34.4		7.7			7.7	
Actuated g/C Ratio	0.01	0.48	0.48	0.07	0.54	0.54		0.12			0.12	
Clearance Time (s)	7.0	7.0	7.0	7.0	7.0	7.0		7.0			7.0	
Vehicle Extension (s)	3.0	3.0	3.0	3.0	3.0	3.0		3.0			3.0	
Lane Grp Cap (vph)	22	1684	761	125	1800	852		181			202	
v/s Ratio Prot	0.00	0.22		c0.03	c0.42							
v/s Ratio Perm			0.01			0.00		c0.02			0.00	
v/c Ratio	0.23	0.46	0.02	0.37	0.77	0.00		0.20			0.03	
Uniform Delay, d1	31.2	11.1	8.7	28.3	11.7	6.8		25.3			24.8	
Progression Factor	1.00	1.00	1.00	1.00	1.00	1.00		1.00			1.00	
Incremental Delay, d2	5.2	0.2	0.0	1.8	2.1	0.0		0.6			0.1	
Delay (s)	36.5	11.3	8.7	30.2	13.8	6.8		25.9			24.8	
Level of Service	D	B	A	C	B	A		C			C	
Approach Delay (s)		11.3			14.3			25.9			24.8	
Approach LOS		B			B			C			C	

Intersection Summary			
HCM Average Control Delay	13.6	HCM Level of Service	B
HCM Volume to Capacity ratio	0.69		
Actuated Cycle Length (s)	63.9	Sum of lost time (s)	21.0
Intersection Capacity Utilization	55.0%	ICU Level of Service	A
Analysis Period (min)	15		

c Critical Lane Group

HCM Unsignalized Intersection Capacity Analysis
200: Tall Cedars Pkwy & West Spine Road

LCPS (HS 7)
2020 Total Future

Movement	EBL	EBR	NBL	NBT	SBT	SBR
Lane Configurations						
Volume (veh/h)	119	204	140	744	1204	131
Sign Control	Stop			Free	Free	
Grade	0%			0%	0%	
Peak Hour Factor	0.92	0.92	0.92	0.92	0.92	0.92
Hourly flow rate (vph)	129	222	152	809	1309	142
Pedestrians						
Lane Width (ft)						
Walking Speed (ft/s)						
Percent Blockage						
Right turn flare (veh)						
Median type				None	None	
Median storage veh)						
Upstream signal (ft)						
pX, platoon unblocked						
vC, conflicting volume	2017	654	1309			
vC1, stage 1 conf vol						
vC2, stage 2 conf vol						
vCu, unblocked vol	2017	654	1309			
tC, single (s)	6.8	6.9	4.1			
tC, 2 stage (s)						
tF (s)	3.5	3.3	2.2			
p0 queue free %	0	46	71			
cM capacity (veh/h)	36	409	525			

Direction, Lane #	EB 1	EB 2	NB 1	NB 2	SB 1	SB 2	SB 3
Volume Total	129	222	422	539	654	654	142
Volume Left	129	0	152	0	0	0	0
Volume Right	0	222	0	0	0	0	142
cSH	36	409	525	1700	1700	1700	1700
Volume to Capacity	3.59	0.54	0.29	0.32	0.38	0.38	0.08
Queue Length 95th (ft)	Err	78	30	0	0	0	0
Control Delay (s)	Err	23.7	8.5	0.0	0.0	0.0	0.0
Lane LOS	F	C	A				
Approach Delay (s)	3698.8		3.7		0.0		
Approach LOS	F						

Intersection Summary			
Average Delay	471.3		
Intersection Capacity Utilization	74.5%	ICU Level of Service	D
Analysis Period (min)	15		

HCM Signalized Intersection Capacity Analysis
300: Braddock Road & Gum Spring Road

LCPS (HS 7)
2020 Total Future

Movement	EBL	EBT	EBR	WBL	WBT	WBR	NBL	NBT	NBR	SBL	SBT	SBR
Lane Configurations												
Volume (vph)	256	340	81	99	552	320	94	339	56	347	499	321
Ideal Flow (vphpl)	1900	1900	1900	1900	1900	1900	1900	1900	1900	1900	1900	1900
Total Lost time (s)	7.0	7.0	7.0	7.0	7.0	7.0	7.0	7.0		7.0	7.0	7.0
Lane Util. Factor	1.00	1.00	1.00	1.00	1.00	1.00	1.00	0.95		1.00	0.95	1.00
Frt	1.00	1.00	0.85	1.00	1.00	0.85	1.00	0.98		1.00	1.00	0.85
Flt Protected	0.95	1.00	1.00	0.95	1.00	1.00	0.95	1.00		0.95	1.00	1.00
Satd. Flow (prot)	1770	1863	1583	1770	1863	1583	1770	3464		1770	3539	1583
Flt Permitted	0.10	1.00	1.00	0.52	1.00	1.00	0.33	1.00		0.28	1.00	1.00
Satd. Flow (perm)	177	1863	1583	965	1863	1583	615	3464		523	3539	1583
Peak-hour factor, PHF	0.92	0.92	0.92	0.92	0.92	0.92	0.92	0.92	0.92	0.92	0.92	0.92
Adj. Flow (vph)	278	370	88	108	600	348	102	368	61	377	542	349
RTOR Reduction (vph)	0	0	49	0	0	71	0	12	0	0	0	72
Lane Group Flow (vph)	278	370	39	108	600	277	102	417	0	377	542	277
Turn Type	pm+pt		pm+ov	pm+pt		pm+ov	pm+pt			pm+pt		pm+ov
Protected Phases	7	4	5	3	8	1	5	2		1	6	7
Permitted Phases	4		4	8		8	2			6		6
Actuated Green, G (s)	58.3	42.7	46.7	43.7	35.1	43.1	21.6	17.6		29.6	21.6	37.8
Effective Green, g (s)	58.3	42.7	46.7	43.7	35.1	43.1	21.6	17.6		29.6	21.6	37.8
Actuated g/C Ratio	0.56	0.41	0.45	0.42	0.33	0.41	0.21	0.17		0.28	0.21	0.36
Clearance Time (s)	7.0	7.0	7.0	7.0	7.0	7.0	7.0	7.0		7.0	7.0	7.0
Vehicle Extension (s)	3.0	3.0	3.0	3.0	3.0	3.0	3.0	3.0		3.0	3.0	3.0
Lane Grp Cap (vph)	344	758	810	468	623	756	171	581		243	729	676
v/s Ratio Prot	c0.12	0.20	0.00	0.02	c0.32	0.03	0.02	0.12		c0.12	0.15	0.06
v/s Ratio Perm	0.32		0.02	0.08		0.15	0.10			c0.32		0.11
v/c Ratio	0.81	0.49	0.05	0.23	0.96	0.37	0.60	0.72		1.55	0.74	0.41
Uniform Delay, d1	28.1	23.0	16.5	19.0	34.3	21.4	36.2	41.3		35.6	39.1	25.2
Progression Factor	1.00	1.00	1.00	1.00	1.00	1.00	1.00	1.00		1.00	1.00	1.00
Incremental Delay, d2	13.0	0.5	0.0	0.3	26.9	0.3	5.5	4.2		267.5	4.1	0.4
Delay (s)	41.1	23.5	16.5	19.3	61.2	21.7	41.7	45.5		303.0	43.2	25.6
Level of Service	D	C	B	B	E	C	D	D		F	D	C
Approach Delay (s)		29.3			43.9			44.8			115.6	
Approach LOS		C			D			D			F	

Intersection Summary			
HCM Average Control Delay	66.4	HCM Level of Service	E
HCM Volume to Capacity ratio	1.21		
Actuated Cycle Length (s)	104.9	Sum of lost time (s)	28.0
Intersection Capacity Utilization	96.9%	ICU Level of Service	F
Analysis Period (min)	15		
c Critical Lane Group			

HCM Unsignalized Intersection Capacity Analysis
600: Road A & North Star Blvd.

LCPS (HS 7)
2020 Total Future

Movement	EBL	EBR	NBL	NBT	SBT	SBR
Lane Configurations						
Sign Control	Stop			Stop	Stop	
Volume (vph)	4	26	27	94	125	2
Peak Hour Factor	0.92	0.92	0.92	0.92	0.92	0.92
Hourly flow rate (vph)	4	28	29	102	136	2

Direction, Lane #	EB 1	EB 2	NB 1	NB 2	SB 1	SB 2
Volume Total (vph)	4	28	29	102	136	2
Volume Left (vph)	4	0	29	0	0	0
Volume Right (vph)	0	28	0	0	0	2
Hadj (s)	2.20	1.00	0.94	0.03	0.03	1.00
Departure Headway (s)	7.3	6.1	5.7	4.7	4.7	5.7
Degree Utilization, x	0.01	0.05	0.05	0.13	0.18	0.00
Capacity (veh/h)	467	558	624	744	741	616
Control Delay (s)	9.2	8.2	7.7	7.3	7.6	7.5
Approach Delay (s)	8.4		7.4		7.6	
Approach LOS	A		A		A	

Intersection Summary			
Delay	7.6		
HCM Level of Service	A		
Intersection Capacity Utilization	23.2%	ICU Level of Service	A
Analysis Period (min)	15		

Movement	EBL	EBR	NBL	NBT	SBT	SBR
Lane Configurations						
Sign Control	Stop			Stop	Stop	
Volume (vph)	52	154	111	70	117	34
Peak Hour Factor	0.92	0.92	0.92	0.92	0.92	0.92
Hourly flow rate (vph)	57	167	121	76	127	37

Direction, Lane #	EB 1	EB 2	NB 1	NB 2	SB 1	SB 2
Volume Total (vph)	57	167	121	76	127	37
Volume Left (vph)	57	0	121	0	0	0
Volume Right (vph)	0	167	0	0	0	37
Hadj (s)	0.53	-0.67	0.53	0.17	0.42	-0.67
Departure Headway (s)	6.0	4.8	5.8	5.4	5.7	4.6
Degree Utilization, x	0.09	0.22	0.19	0.11	0.20	0.05
Capacity (veh/h)	569	713	596	633	599	735
Control Delay (s)	8.4	7.9	9.0	7.9	9.0	6.7
Approach Delay (s)	8.0		8.6		8.5	
Approach LOS	A		A		A	

Intersection Summary			
Delay	8.3		
HCM Level of Service	A		
Intersection Capacity Utilization	22.8%	ICU Level of Service	A
Analysis Period (min)	15		

Movement	EBL	EBT	EBR	WBL	WBT	WBR	NBL	NBT	NBR	SBL	SBT	SBR
Lane Configurations												
Volume (veh/h)	117	316	64	163	467	71	69	35	90	68	49	135
Sign Control		Free			Free			Stop			Stop	
Grade		0%			0%			0%			0%	
Peak Hour Factor	0.92	0.92	0.92	0.92	0.92	0.92	0.92	0.92	0.92	0.92	0.92	0.92
Hourly flow rate (vph)	127	343	70	177	508	77	75	38	98	74	53	147
Pedestrians												
Lane Width (ft)												
Walking Speed (ft/s)												
Percent Blockage												
Right turn flare (veh)									12			12
Median type		None			None							
Median storage veh)												
Upstream signal (ft)												
pX, platoon unblocked												
vC, conflicting volume	585			413			1560	1537	343	1528	1529	508
vC1, stage 1 conf vol												
vC2, stage 2 conf vol												
vCu, unblocked vol	585			413			1560	1537	343	1528	1529	508
tC, single (s)	4.1			4.1			7.1	6.5	6.2	7.2	6.5	6.4
tC, 2 stage (s)												
tF (s)	2.2			2.2			3.5	4.0	3.3	3.6	4.0	3.5
p0 queue free %	87			85			0	55	86	0	38	72
cM capacity (veh/h)	975			1146			27	85	699	42	86	533

Direction, Lane #	EB 1	EB 2	EB 3	WB 1	WB 2	WB 3	NB 1	NB 2	SB 1	SB 2
Volume Total	127	343	70	177	508	77	75	136	74	200
Volume Left	127	0	0	177	0	0	75	0	74	0
Volume Right	0	0	70	0	0	77	0	98	0	147
cSH	975	1700	1700	1146	1700	1700	27	304	42	323
Volume to Capacity	0.13	0.20	0.04	0.15	0.30	0.05	2.74	0.45	1.76	0.62
Queue Length 95th (ft)	11	0	0	14	0	0	226	55	191	97
Control Delay (s)	9.2	0.0	0.0	8.7	0.0	0.0	1089.2	29.7	573.7	36.8
Lane LOS	A			A			F	D	F	E
Approach Delay (s)	2.2			2.0			406.5		181.7	
Approach LOS							F		F	

Intersection Summary			
Average Delay	77.3		
Intersection Capacity Utilization	51.6%	ICU Level of Service	A
Analysis Period (min)	15		

HCM Signalized Intersection Capacity Analysis
100: Route 50 & Goshen Road

LCPS (HS 7)
2020 Total Future

Movement	EBL	EBT	EBR	WBL	WBT	WBR	NBL	NBT	NBR	SBL	SBT	SBR
Lane Configurations												
Volume (vph)	17	1723	23	52	591	15	35	17	49	6	1	0
Ideal Flow (vphpl)	1900	1900	1900	1900	1900	1900	1900	1900	1900	1900	1900	1900
Total Lost time (s)	7.0	7.0	7.0	7.0	7.0	7.0		7.0			7.0	
Lane Util. Factor	1.00	0.95	1.00	1.00	0.95	1.00		1.00			1.00	
Frt	1.00	1.00	0.85	1.00	1.00	0.85		0.93			1.00	
Flt Protected	0.95	1.00	1.00	0.95	1.00	1.00		0.98			0.96	
Satd. Flow (prot)	1770	3505	1538	1752	3343	1583		1711			1785	
Flt Permitted	0.95	1.00	1.00	0.95	1.00	1.00		0.88			0.78	
Satd. Flow (perm)	1770	3505	1538	1752	3343	1583		1534			1448	
Peak-hour factor, PHF	0.92	0.92	0.92	0.92	0.92	0.92	0.92	0.92	0.92	0.92	0.92	0.92
Adj. Flow (vph)	18	1873	25	57	642	16	38	18	53	7	1	0
RTOR Reduction (vph)	0	0	5	0	0	5	0	19	0	0	0	0
Lane Group Flow (vph)	18	1873	20	57	642	11	0	90	0	0	8	0
Heavy Vehicles (%)	2%	3%	5%	3%	8%	2%	2%	2%	2%	2%	2%	2%
Turn Type	Prot		Perm	Prot		Perm	Perm			Perm		
Protected Phases	5	2		1	6			8			4	
Permitted Phases			2			6	8			4		
Actuated Green, G (s)	2.6	79.2	79.2	7.6	84.2	84.2		13.4			13.4	
Effective Green, g (s)	2.6	79.2	79.2	7.6	84.2	84.2		13.4			13.4	
Actuated g/C Ratio	0.02	0.65	0.65	0.06	0.69	0.69		0.11			0.11	
Clearance Time (s)	7.0	7.0	7.0	7.0	7.0	7.0		7.0			7.0	
Vehicle Extension (s)	3.0	3.0	3.0	3.0	3.0	3.0		3.0			3.0	
Lane Grp Cap (vph)	38	2290	1005	110	2322	1100		170			160	
v/s Ratio Prot	0.01	c0.53		c0.03	c0.19							
v/s Ratio Perm			0.01			0.01		c0.06			0.01	
v/c Ratio	0.47	0.82	0.02	0.52	0.28	0.01		0.53			0.05	
Uniform Delay, d1	58.6	15.6	7.4	55.0	7.0	5.7		50.9			48.2	
Progression Factor	1.00	1.00	1.00	1.00	1.00	1.00		1.00			1.00	
Incremental Delay, d2	9.0	2.4	0.0	4.1	0.1	0.0		3.2			0.1	
Delay (s)	67.7	18.0	7.4	59.1	7.1	5.7		54.1			48.3	
Level of Service	E	B	A	E	A	A		D			D	
Approach Delay (s)		18.3			11.2			54.1			48.3	
Approach LOS		B			B			D			D	

Intersection Summary			
HCM Average Control Delay	18.0	HCM Level of Service	B
HCM Volume to Capacity ratio	0.82		
Actuated Cycle Length (s)	121.2	Sum of lost time (s)	28.0
Intersection Capacity Utilization	64.8%	ICU Level of Service	C
Analysis Period (min)	15		

c Critical Lane Group

HCM Signalized Intersection Capacity Analysis
200: Tall Cedars Pkwy & West Spine Road

LCPS (HS 7)
2020 Total Future

Movement	EBL	EBR	NBL	NBT	SBT	SBR
Lane Configurations						
Volume (vph)	164	247	194	1299	529	169
Ideal Flow (vphpl)	1900	1900	1900	1900	1900	1900
Total Lost time (s)	7.0	7.0		7.0	7.0	7.0
Lane Util. Factor	1.00	1.00		0.95	0.95	1.00
Frt	1.00	0.85		1.00	1.00	0.85
Flt Protected	0.95	1.00		0.99	1.00	1.00
Satd. Flow (prot)	1770	1583		3516	3539	1583
Flt Permitted	0.95	1.00		0.76	1.00	1.00
Satd. Flow (perm)	1770	1583		2690	3539	1583
Peak-hour factor, PHF	0.92	0.92	0.92	0.92	0.92	0.92
Adj. Flow (vph)	178	268	211	1412	575	184
RTOR Reduction (vph)	0	224	0	0	0	59
Lane Group Flow (vph)	178	44	0	1623	575	125
Turn Type		Perm	Perm			Perm
Protected Phases	4			2	6	
Permitted Phases		4	2			6
Actuated Green, G (s)	14.8	14.8		61.3	61.3	61.3
Effective Green, g (s)	14.8	14.8		61.3	61.3	61.3
Actuated g/C Ratio	0.16	0.16		0.68	0.68	0.68
Clearance Time (s)	7.0	7.0		7.0	7.0	7.0
Vehicle Extension (s)	3.0	3.0		3.0	3.0	3.0
Lane Grp Cap (vph)	291	260		1830	2408	1077
v/s Ratio Prot	c0.10				0.16	
v/s Ratio Perm		0.03		c0.60		0.08
v/c Ratio	0.61	0.17		0.89	0.24	0.12
Uniform Delay, d1	35.0	32.4		11.6	5.5	5.0
Progression Factor	1.00	1.00		1.00	1.00	1.00
Incremental Delay, d2	3.8	0.3		5.6	0.1	0.0
Delay (s)	38.8	32.7		17.2	5.5	5.0
Level of Service	D	C		B	A	A
Approach Delay (s)	35.1			17.2	5.4	
Approach LOS	D			B	A	

Intersection Summary			
HCM Average Control Delay	16.9	HCM Level of Service	B
HCM Volume to Capacity ratio	0.83		
Actuated Cycle Length (s)	90.1	Sum of lost time (s)	14.0
Intersection Capacity Utilization	82.7%	ICU Level of Service	E
Analysis Period (min)	15		

c Critical Lane Group

Movement	EBL	EBT	EBR	WBL	WBT	WBR	NBL	NBT	NBR	SBL	SBT	SBR
Lane Configurations												
Volume (vph)	379	674	108	80	258	371	73	521	168	395	296	186
Ideal Flow (vphpl)	1900	1900	1900	1900	1900	1900	1900	1900	1900	1900	1900	1900
Total Lost time (s)	7.0	7.0	7.0	7.0	7.0	7.0	7.0	7.0	7.0	7.0	7.0	7.0
Lane Util. Factor	0.97	0.95	1.00	1.00	0.95	1.00	1.00	0.95	1.00	1.00	0.95	1.00
Frt	1.00	1.00	0.85	1.00	1.00	0.85	1.00	1.00	0.85	1.00	1.00	0.85
Flt Protected	0.95	1.00	1.00	0.95	1.00	1.00	0.95	1.00	1.00	0.95	1.00	1.00
Satd. Flow (prot)	3433	3539	1583	1770	3539	1583	1770	3539	1583	1770	3539	1583
Flt Permitted	0.95	1.00	1.00	0.34	1.00	1.00	0.56	1.00	1.00	0.16	1.00	1.00
Satd. Flow (perm)	3433	3539	1583	626	3539	1583	1037	3539	1583	294	3539	1583
Peak-hour factor, PHF	0.92	0.92	0.92	0.92	0.92	0.92	0.92	0.92	0.92	0.92	0.92	0.92
Adj. Flow (vph)	412	733	117	87	280	403	79	566	183	429	322	202
RTOR Reduction (vph)	0	0	80	0	0	18	0	0	59	0	0	95
Lane Group Flow (vph)	412	733	37	87	280	385	79	566	124	429	322	107
Turn Type	Prot		pm+ov	pm+pt		pm+ov	pm+pt		pm+ov	pm+pt		pm+ov
Protected Phases	7	4	5	3	8	1	5	2	3	1	6	7
Permitted Phases			4	8		8	2		2	6		6
Actuated Green, G (s)	16.9	26.7	31.7	19.8	14.8	37.9	23.6	18.6	23.6	48.7	36.7	53.6
Effective Green, g (s)	16.9	26.7	31.7	19.8	14.8	37.9	23.6	18.6	23.6	48.7	36.7	53.6
Actuated g/C Ratio	0.17	0.26	0.31	0.20	0.15	0.37	0.23	0.18	0.23	0.48	0.36	0.53
Clearance Time (s)	7.0	7.0	7.0	7.0	7.0	7.0	7.0	7.0	7.0	7.0	7.0	7.0
Vehicle Extension (s)	3.0	3.0	3.0	3.0	3.0	3.0	3.0	3.0	3.0	3.0	3.0	3.0
Lane Grp Cap (vph)	572	932	604	179	517	701	277	649	478	477	1281	946
v/s Ratio Prot	c0.12	c0.21	0.00	0.02	0.08	0.13	0.01	0.16	0.01	c0.20	0.09	0.02
v/s Ratio Perm			0.02	0.07		0.12	0.05		0.07	c0.23		0.05
v/c Ratio	0.72	0.79	0.06	0.49	0.54	0.55	0.29	0.87	0.26	0.90	0.25	0.11
Uniform Delay, d1	40.0	34.7	24.4	34.5	40.2	25.0	31.2	40.2	31.8	26.2	22.7	12.0
Progression Factor	1.00	1.00	1.00	1.00	1.00	1.00	1.00	1.00	1.00	1.00	1.00	1.00
Incremental Delay, d2	4.4	4.4	0.0	2.1	1.2	0.9	0.6	12.3	0.3	19.4	0.1	0.1
Delay (s)	44.5	39.1	24.5	36.6	41.3	25.9	31.8	52.6	32.1	45.6	22.8	12.0
Level of Service	D	D	C	D	D	C	C	D	C	D	C	B
Approach Delay (s)		39.5			32.7			46.1			30.8	
Approach LOS		D			C			D			C	

Intersection Summary			
HCM Average Control Delay	37.4	HCM Level of Service	D
HCM Volume to Capacity ratio	0.85		
Actuated Cycle Length (s)	101.4	Sum of lost time (s)	21.0
Intersection Capacity Utilization	82.7%	ICU Level of Service	E
Analysis Period (min)	15		
c Critical Lane Group			

Movement	EBL	EBR	NBL	NBT	SBT	SBR
Lane Configurations						
Sign Control	Stop			Stop	Stop	
Volume (vph)	2	40	37	104	90	5
Peak Hour Factor	0.92	0.92	0.92	0.92	0.92	0.92
Hourly flow rate (vph)	2	43	40	113	98	5

Direction, Lane #	EB 1	EB 2	NB 1	NB 2	SB 1	SB 2
Volume Total (vph)	2	43	40	113	98	5
Volume Left (vph)	2	0	40	0	0	0
Volume Right (vph)	0	43	0	0	0	5
Hadj (s)	2.20	-0.39	1.83	0.03	0.03	1.00
Departure Headway (s)	7.3	4.7	6.5	4.7	4.8	5.7
Degree Utilization, x	0.00	0.06	0.07	0.15	0.13	0.01
Capacity (veh/h)	468	719	541	745	733	611
Control Delay (s)	9.1	6.8	8.8	7.4	7.3	7.6
Approach Delay (s)	6.9		7.7		7.3	
Approach LOS	A		A		A	

Intersection Summary			
Delay	7.5		
HCM Level of Service	A		
Intersection Capacity Utilization	18.7%	ICU Level of Service	A
Analysis Period (min)	15		

Movement	EBL	EBR	NBL	NBT	SBT	SBR
Lane Configurations						
Sign Control	Stop			Stop	Stop	
Volume (vph)	46	156	218	95	60	70
Peak Hour Factor	0.92	0.92	0.92	0.92	0.92	0.92
Hourly flow rate (vph)	50	170	237	103	65	76

Direction, Lane #	EB 1	EB 2	NB 1	NB 2	SB 1	SB 2
Volume Total (vph)	50	170	237	103	65	76
Volume Left (vph)	50	0	237	0	0	0
Volume Right (vph)	0	170	0	0	0	76
Hadj (s)	0.53	-0.67	0.53	0.51	0.20	-0.67
Departure Headway (s)	6.2	5.0	5.8	5.8	5.7	4.8
Degree Utilization, x	0.09	0.24	0.38	0.17	0.10	0.10
Capacity (veh/h)	540	668	604	602	598	704
Control Delay (s)	8.6	8.4	11.1	8.7	8.2	7.2
Approach Delay (s)	8.5		10.4		7.6	
Approach LOS	A		B		A	

Intersection Summary			
Delay	9.2		
HCM Level of Service	A		
Intersection Capacity Utilization	28.7%	ICU Level of Service	A
Analysis Period (min)	15		

Movement	EBL	EBT	EBR	WBL	WBT	WBR	NBL	NBT	NBR	SBL	SBT	SBR
Lane Configurations												
Volume (vph)	210	460	66	63	214	71	62	46	182	83	38	162
Ideal Flow (vphpl)	1900	1900	1900	1900	1900	1900	1900	1900	1900	1900	1900	1900
Total Lost time (s)	7.0	7.0	7.0	7.0	7.0	7.0	7.0	7.0	7.0	7.0	7.0	7.0
Lane Util. Factor	1.00	1.00	1.00	1.00	1.00	1.00	1.00	1.00	1.00	1.00	1.00	1.00
Frt	1.00	1.00	0.85	1.00	1.00	0.85	1.00	1.00	0.85	1.00	1.00	0.85
Flt Protected	0.95	1.00	1.00	0.95	1.00	1.00	0.95	1.00	1.00	0.95	1.00	1.00
Satd. Flow (prot)	1612	1863	1583	1770	1863	1495	1770	1863	1583	1770	1863	1553
Flt Permitted	0.61	1.00	1.00	0.27	1.00	1.00	0.73	1.00	1.00	0.50	1.00	1.00
Satd. Flow (perm)	1041	1863	1583	501	1863	1495	1360	1863	1583	936	1863	1553
Peak-hour factor, PHF	0.92	0.92	0.92	0.92	0.92	0.92	0.92	0.92	0.92	0.92	0.92	0.92
Adj. Flow (vph)	228	500	72	68	233	77	67	50	198	90	41	176
RTOR Reduction (vph)	0	0	43	0	0	43	0	0	165	0	0	139
Lane Group Flow (vph)	228	500	29	68	233	34	67	50	33	90	41	37
Heavy Vehicles (%)	12%	2%	2%	2%	2%	8%	2%	2%	2%	2%	2%	4%
Turn Type	pm+pt		pm+ov	pm+pt		pm+ov	pm+pt		pm+ov	pm+pt		pm+ov
Protected Phases	5	2	3	1	6	7	3	8	1	7	4	5
Permitted Phases	2		2	6		6	8		8	4		4
Actuated Green, G (s)	29.4	25.2	28.9	29.4	25.2	32.3	11.4	7.7	11.9	18.2	11.1	15.3
Effective Green, g (s)	29.4	25.2	28.9	29.4	25.2	32.3	11.4	7.7	11.9	18.2	11.1	15.3
Actuated g/C Ratio	0.41	0.35	0.40	0.41	0.35	0.45	0.16	0.11	0.16	0.25	0.15	0.21
Clearance Time (s)	7.0	7.0	7.0	7.0	7.0	7.0	7.0	7.0	7.0	7.0	7.0	7.0
Vehicle Extension (s)	3.0	3.0	3.0	3.0	3.0	3.0	3.0	3.0	3.0	3.0	3.0	3.0
Lane Grp Cap (vph)	457	650	787	278	650	814	236	199	414	318	286	480
v/s Ratio Prot	c0.03	c0.27	0.00	0.01	0.13	0.00	0.01	0.03	0.00	c0.03	0.02	0.00
v/s Ratio Perm	0.17		0.02	0.09		0.02	0.03		0.02	c0.04		0.02
v/c Ratio	0.50	0.77	0.04	0.24	0.36	0.04	0.28	0.25	0.08	0.28	0.14	0.08
Uniform Delay, d1	15.0	20.9	13.2	14.1	17.5	11.2	26.6	29.6	25.5	21.4	26.4	22.8
Progression Factor	1.00	1.00	1.00	1.00	1.00	1.00	1.00	1.00	1.00	1.00	1.00	1.00
Incremental Delay, d2	0.9	5.5	0.0	0.5	0.3	0.0	0.7	0.7	0.1	0.5	0.2	0.1
Delay (s)	15.9	26.4	13.2	14.6	17.8	11.3	27.3	30.3	25.6	21.9	26.7	22.9
Level of Service	B	C	B	B	B	B	C	C	C	C	C	C
Approach Delay (s)		22.2			15.9			26.7			23.1	
Approach LOS		C			B			C			C	

Intersection Summary			
HCM Average Control Delay	21.8	HCM Level of Service	C
HCM Volume to Capacity ratio	0.60		
Actuated Cycle Length (s)	72.2	Sum of lost time (s)	28.0
Intersection Capacity Utilization	57.6%	ICU Level of Service	B
Analysis Period (min)	15		

c Critical Lane Group

HCM Signalized Intersection Capacity Analysis
100: Route 50 & Goshen Road

LCPS (HS 7)
2020 Total Future

Movement	EBL	EBT	EBR	WBL	WBT	WBR	NBL	NBT	NBR	SBL	SBT	SBR
Lane Configurations												
Volume (vph)	5	715	33	42	1279	2	23	1	43	1	4	2
Ideal Flow (vphpl)	1900	1900	1900	1900	1900	1900	1900	1900	1900	1900	1900	1900
Total Lost time (s)	7.0	7.0	7.0	7.0	7.0	7.0		7.0			7.0	
Lane Util. Factor	1.00	0.95	1.00	1.00	0.95	1.00		1.00			1.00	
Frt	1.00	1.00	0.85	1.00	1.00	0.85		0.91			0.96	
Flt Protected	0.95	1.00	1.00	0.95	1.00	1.00		0.98			0.99	
Satd. Flow (prot)	1770	3505	1583	1770	3343	1583		1672			1778	
Flt Permitted	0.95	1.00	1.00	0.95	1.00	1.00		0.88			0.94	
Satd. Flow (perm)	1770	3505	1583	1770	3343	1583		1503			1677	
Peak-hour factor, PHF	0.92	0.92	0.92	0.92	0.92	0.92	0.92	0.92	0.92	0.92	0.92	0.92
Adj. Flow (vph)	5	777	36	46	1390	2	25	1	47	1	4	2
RTOR Reduction (vph)	0	0	19	0	0	0	0	36	0	0	2	0
Lane Group Flow (vph)	5	777	17	46	1390	2	0	37	0	0	5	0
Heavy Vehicles (%)	2%	3%	2%	2%	8%	2%	2%	2%	2%	2%	2%	2%
Turn Type	Prot		Perm	Prot		Perm	Perm			Perm		
Protected Phases	5	2		1	6			8			4	
Permitted Phases			2			6	8			4		
Actuated Green, G (s)	0.8	30.7	30.7	4.5	34.4	34.4		7.7			7.7	
Effective Green, g (s)	0.8	30.7	30.7	4.5	34.4	34.4		7.7			7.7	
Actuated g/C Ratio	0.01	0.48	0.48	0.07	0.54	0.54		0.12			0.12	
Clearance Time (s)	7.0	7.0	7.0	7.0	7.0	7.0		7.0			7.0	
Vehicle Extension (s)	3.0	3.0	3.0	3.0	3.0	3.0		3.0			3.0	
Lane Grp Cap (vph)	22	1684	761	125	1800	852		181			202	
v/s Ratio Prot	0.00	0.22		c0.03	c0.42							
v/s Ratio Perm			0.01			0.00		c0.02			0.00	
v/c Ratio	0.23	0.46	0.02	0.37	0.77	0.00		0.20			0.03	
Uniform Delay, d1	31.2	11.1	8.7	28.3	11.7	6.8		25.3			24.8	
Progression Factor	1.00	1.00	1.00	1.00	1.00	1.00		1.00			1.00	
Incremental Delay, d2	5.2	0.2	0.0	1.8	2.1	0.0		0.6			0.1	
Delay (s)	36.5	11.3	8.7	30.2	13.8	6.8		25.9			24.8	
Level of Service	D	B	A	C	B	A		C			C	
Approach Delay (s)		11.3			14.3			25.9			24.8	
Approach LOS		B			B			C			C	

Intersection Summary			
HCM Average Control Delay	13.6	HCM Level of Service	B
HCM Volume to Capacity ratio	0.69		
Actuated Cycle Length (s)	63.9	Sum of lost time (s)	21.0
Intersection Capacity Utilization	55.0%	ICU Level of Service	A
Analysis Period (min)	15		

c Critical Lane Group

HCM Signalized Intersection Capacity Analysis
200: Tall Cedars Pkwy & West Spine Road

LCPS (HS 7)
2020 Total Future

Movement	EBL	EBR	NBL	NBT	SBT	SBR
Lane Configurations						
Volume (vph)	119	204	140	744	1204	131
Ideal Flow (vphpl)	1900	1900	1900	1900	1900	1900
Total Lost time (s)	7.0	7.0		7.0	7.0	7.0
Lane Util. Factor	1.00	1.00		0.95	0.95	1.00
Frt	1.00	0.85		1.00	1.00	0.85
Flt Protected	0.95	1.00		0.99	1.00	1.00
Satd. Flow (prot)	1770	1583		3511	3539	1583
Flt Permitted	0.95	1.00		0.54	1.00	1.00
Satd. Flow (perm)	1770	1583		1928	3539	1583
Peak-hour factor, PHF	0.92	0.92	0.92	0.92	0.92	0.92
Adj. Flow (vph)	129	222	152	809	1309	142
RTOR Reduction (vph)	0	83	0	0	0	54
Lane Group Flow (vph)	129	139	0	961	1309	88
Turn Type		Perm	Perm			Perm
Protected Phases	4			2	6	
Permitted Phases		4	2			6
Actuated Green, G (s)	11.0	11.0		40.5	40.5	40.5
Effective Green, g (s)	11.0	11.0		40.5	40.5	40.5
Actuated g/C Ratio	0.17	0.17		0.62	0.62	0.62
Clearance Time (s)	7.0	7.0		7.0	7.0	7.0
Vehicle Extension (s)	3.0	3.0		3.0	3.0	3.0
Lane Grp Cap (vph)	297	266		1192	2188	979
v/s Ratio Prot	0.07				0.37	
v/s Ratio Perm		c0.09		c0.50		0.06
v/c Ratio	0.43	0.52		0.81	0.60	0.09
Uniform Delay, d1	24.5	24.9		9.5	7.6	5.1
Progression Factor	1.00	1.00		1.00	1.00	1.00
Incremental Delay, d2	1.0	1.8		4.1	0.4	0.0
Delay (s)	25.5	26.7		13.6	8.0	5.1
Level of Service	C	C		B	A	A
Approach Delay (s)	26.2			13.6	7.7	
Approach LOS	C			B	A	

Intersection Summary			
HCM Average Control Delay	12.1	HCM Level of Service	B
HCM Volume to Capacity ratio	0.75		
Actuated Cycle Length (s)	65.5	Sum of lost time (s)	14.0
Intersection Capacity Utilization	82.0%	ICU Level of Service	E
Analysis Period (min)	15		

c Critical Lane Group

HCM Signalized Intersection Capacity Analysis
300: Braddock Road & Gum Spring Road

LCPS (HS 7)
2020 Total Future

Movement	EBL	EBT	EBR	WBL	WBT	WBR	NBL	NBT	NBR	SBL	SBT	SBR
Lane Configurations												
Volume (vph)	256	340	81	99	552	320	94	339	56	347	499	321
Ideal Flow (vphpl)	1900	1900	1900	1900	1900	1900	1900	1900	1900	1900	1900	1900
Total Lost time (s)	7.0	7.0	7.0	7.0	7.0	7.0	7.0	7.0	7.0	7.0	7.0	7.0
Lane Util. Factor	0.97	0.95	1.00	1.00	0.95	1.00	1.00	0.95	1.00	1.00	0.95	1.00
Frt	1.00	1.00	0.85	1.00	1.00	0.85	1.00	1.00	0.85	1.00	1.00	0.85
Flt Protected	0.95	1.00	1.00	0.95	1.00	1.00	0.95	1.00	1.00	0.95	1.00	1.00
Satd. Flow (prot)	3433	3539	1583	1770	3539	1583	1770	3539	1583	1770	3539	1583
Flt Permitted	0.95	1.00	1.00	0.53	1.00	1.00	0.45	1.00	1.00	0.30	1.00	1.00
Satd. Flow (perm)	3433	3539	1583	990	3539	1583	838	3539	1583	554	3539	1583
Peak-hour factor, PHF	0.92	0.92	0.92	0.92	0.92	0.92	0.92	0.92	0.92	0.92	0.92	0.92
Adj. Flow (vph)	278	370	88	108	600	348	102	368	61	377	542	349
RTOR Reduction (vph)	0	0	58	0	0	43	0	0	46	0	0	91
Lane Group Flow (vph)	278	370	30	108	600	305	102	368	15	377	542	258
Turn Type	Prot		pm+ov	pm+pt		pm+ov	pm+pt		pm+ov	pm+pt		pm+ov
Protected Phases	7	4	5	3	8	1	5	2	3	1	6	7
Permitted Phases			4	8		8	2		2	6		6
Actuated Green, G (s)	13.1	24.3	32.6	29.8	20.5	40.2	23.5	15.2	24.5	41.9	26.6	39.7
Effective Green, g (s)	13.1	24.3	32.6	29.8	20.5	40.2	23.5	15.2	24.5	41.9	26.6	39.7
Actuated g/C Ratio	0.14	0.25	0.34	0.31	0.21	0.42	0.24	0.16	0.25	0.43	0.28	0.41
Clearance Time (s)	7.0	7.0	7.0	7.0	7.0	7.0	7.0	7.0	7.0	7.0	7.0	7.0
Vehicle Extension (s)	3.0	3.0	3.0	3.0	3.0	3.0	3.0	3.0	3.0	3.0	3.0	3.0
Lane Grp Cap (vph)	466	891	650	381	752	774	284	557	517	489	976	766
v/s Ratio Prot	c0.08	c0.10	0.00	0.03	c0.17	0.08	0.03	0.10	0.00	c0.16	0.15	0.05
v/s Ratio Perm			0.01	0.06		0.11	0.06		0.01	c0.18		0.12
v/c Ratio	0.60	0.42	0.05	0.28	0.80	0.39	0.36	0.66	0.03	0.77	0.56	0.34
Uniform Delay, d1	39.2	30.2	21.5	24.5	36.0	19.6	29.3	38.2	27.1	20.4	29.9	19.4
Progression Factor	1.00	1.00	1.00	1.00	1.00	1.00	1.00	1.00	1.00	1.00	1.00	1.00
Incremental Delay, d2	2.1	0.3	0.0	0.4	5.9	0.3	0.8	2.9	0.0	7.4	0.7	0.3
Delay (s)	41.3	30.5	21.5	25.0	41.9	20.0	30.1	41.2	27.1	27.8	30.6	19.7
Level of Service	D	C	C	C	D	B	C	D	C	C	C	B
Approach Delay (s)		33.5			33.0			37.4			26.8	
Approach LOS		C			C			D			C	

Intersection Summary			
HCM Average Control Delay	31.5	HCM Level of Service	C
HCM Volume to Capacity ratio	0.80		
Actuated Cycle Length (s)	96.5	Sum of lost time (s)	28.0
Intersection Capacity Utilization	74.5%	ICU Level of Service	D
Analysis Period (min)	15		
c Critical Lane Group			

HCM Unsignalized Intersection Capacity Analysis
600: Road A & North Star Blvd.

LCPS (HS 7)
2020 Total Future

Movement	EBL	EBR	NBL	NBT	SBT	SBR
Lane Configurations						
Sign Control	Stop			Stop	Stop	
Volume (vph)	4	26	27	94	125	2
Peak Hour Factor	0.92	0.92	0.92	0.92	0.92	0.92
Hourly flow rate (vph)	4	28	29	102	136	2

Direction, Lane #	EB 1	EB 2	NB 1	NB 2	SB 1	SB 2
Volume Total (vph)	4	28	29	102	136	2
Volume Left (vph)	4	0	29	0	0	0
Volume Right (vph)	0	28	0	0	0	2
Hadj (s)	2.20	1.00	0.94	0.03	0.03	1.00
Departure Headway (s)	7.3	6.1	5.7	4.7	4.7	5.7
Degree Utilization, x	0.01	0.05	0.05	0.13	0.18	0.00
Capacity (veh/h)	467	558	624	744	741	616
Control Delay (s)	9.2	8.2	7.7	7.3	7.6	7.5
Approach Delay (s)	8.4		7.4		7.6	
Approach LOS	A		A		A	

Intersection Summary			
Delay	7.6		
HCM Level of Service	A		
Intersection Capacity Utilization	23.2%	ICU Level of Service	A
Analysis Period (min)	15		

Movement	EBL	EBR	NBL	NBT	SBT	SBR
Lane Configurations						
Sign Control	Stop			Stop	Stop	
Volume (vph)	52	154	111	70	117	34
Peak Hour Factor	0.92	0.92	0.92	0.92	0.92	0.92
Hourly flow rate (vph)	57	167	121	76	127	37

Direction, Lane #	EB 1	EB 2	NB 1	NB 2	SB 1	SB 2
Volume Total (vph)	57	167	121	76	127	37
Volume Left (vph)	57	0	121	0	0	0
Volume Right (vph)	0	167	0	0	0	37
Hadj (s)	0.53	-0.67	0.53	0.17	0.42	-0.67
Departure Headway (s)	6.0	4.8	5.8	5.4	5.7	4.6
Degree Utilization, x	0.09	0.22	0.19	0.11	0.20	0.05
Capacity (veh/h)	569	713	596	633	599	735
Control Delay (s)	8.4	7.9	9.0	7.9	9.0	6.7
Approach Delay (s)	8.0		8.6		8.5	
Approach LOS	A		A		A	

Intersection Summary			
Delay	8.3		
HCM Level of Service	A		
Intersection Capacity Utilization	22.8%	ICU Level of Service	A
Analysis Period (min)	15		

Movement	EBL	EBT	EBR	WBL	WBT	WBR	NBL	NBT	NBR	SBL	SBT	SBR
Lane Configurations												
Volume (vph)	117	316	64	163	467	71	69	35	90	68	49	135
Ideal Flow (vphpl)	1900	1900	1900	1900	1900	1900	1900	1900	1900	1900	1900	1900
Total Lost time (s)	7.0	7.0	7.0	7.0	7.0	7.0	7.0	7.0	7.0	7.0	7.0	7.0
Lane Util. Factor	1.00	1.00	1.00	1.00	1.00	1.00	1.00	1.00	1.00	1.00	1.00	1.00
Frt	1.00	1.00	0.85	1.00	1.00	0.85	1.00	1.00	0.85	1.00	1.00	0.85
Flt Protected	0.95	1.00	1.00	0.95	1.00	1.00	0.95	1.00	1.00	0.95	1.00	1.00
Satd. Flow (prot)	1719	1863	1583	1770	1863	1583	1770	1863	1583	1656	1863	1357
Flt Permitted	0.30	1.00	1.00	0.38	1.00	1.00	0.72	1.00	1.00	0.56	1.00	1.00
Satd. Flow (perm)	539	1863	1583	700	1863	1583	1346	1863	1583	974	1863	1357
Peak-hour factor, PHF	0.92	0.92	0.92	0.92	0.92	0.92	0.92	0.92	0.92	0.92	0.92	0.92
Adj. Flow (vph)	127	343	70	177	508	77	75	38	98	74	53	147
RTOR Reduction (vph)	0	0	44	0	0	43	0	0	76	0	0	117
Lane Group Flow (vph)	127	343	26	177	508	34	75	38	22	74	53	30
Heavy Vehicles (%)	5%	2%	2%	2%	2%	2%	2%	2%	2%	9%	2%	19%
Turn Type	pm+pt		pm+ov	pm+pt		pm+ov	pm+pt		pm+ov	pm+pt		pm+ov
Protected Phases	5	2	3	1	6	7	3	8	1	7	4	5
Permitted Phases	2		2	6		6	8		8	4		4
Actuated Green, G (s)	27.5	22.2	26.6	34.1	25.5	32.2	11.8	7.4	16.0	16.4	9.7	15.0
Effective Green, g (s)	27.5	22.2	26.6	34.1	25.5	32.2	11.8	7.4	16.0	16.4	9.7	15.0
Actuated g/C Ratio	0.38	0.30	0.36	0.47	0.35	0.44	0.16	0.10	0.22	0.22	0.13	0.21
Clearance Time (s)	7.0	7.0	7.0	7.0	7.0	7.0	7.0	7.0	7.0	7.0	7.0	7.0
Vehicle Extension (s)	3.0	3.0	3.0	3.0	3.0	3.0	3.0	3.0	3.0	3.0	3.0	3.0
Lane Grp Cap (vph)	289	567	730	454	652	851	243	189	499	282	248	410
v/s Ratio Prot	0.03	0.18	0.00	c0.05	c0.27	0.00	0.02	0.02	0.01	c0.02	0.03	0.01
v/s Ratio Perm	0.13		0.01	0.14		0.02	0.03		0.01	c0.03		0.02
v/c Ratio	0.44	0.60	0.03	0.39	0.78	0.04	0.31	0.20	0.04	0.26	0.21	0.07
Uniform Delay, d1	15.8	21.6	14.9	12.0	21.2	11.6	26.7	30.0	22.4	23.0	28.2	23.3
Progression Factor	1.00	1.00	1.00	1.00	1.00	1.00	1.00	1.00	1.00	1.00	1.00	1.00
Incremental Delay, d2	1.1	1.8	0.0	0.6	5.9	0.0	0.7	0.5	0.0	0.5	0.4	0.1
Delay (s)	16.9	23.4	14.9	12.6	27.1	11.6	27.5	30.6	22.5	23.5	28.6	23.4
Level of Service	B	C	B	B	C	B	C	C	C	C	C	C
Approach Delay (s)		20.8			22.1			25.7			24.4	
Approach LOS		C			C			C			C	

Intersection Summary			
HCM Average Control Delay	22.5	HCM Level of Service	C
HCM Volume to Capacity ratio	0.53		
Actuated Cycle Length (s)	72.9	Sum of lost time (s)	21.0
Intersection Capacity Utilization	59.1%	ICU Level of Service	B
Analysis Period (min)	15		

c Critical Lane Group

APPENDIX N-4

INTERSECTION CAPACITY ANALYSIS RESULTS– FUTURE CONDITIONS WITH PROPOSED DEVELOPMENT (2020) – ES PEAK, ALTERNATIVE 2

HCM Signalized Intersection Capacity Analysis
100: Route 50 & Goshen Road

LCPS (HS 7)
2020 Total Future

Movement	EBL	EBT	EBR	WBL	WBT	WBR	NBL	NBT	NBR	SBL	SBT	SBR
Lane Configurations												
Volume (vph)	17	1723	22	45	591	15	35	17	45	6	1	0
Ideal Flow (vphpl)	1900	1900	1900	1900	1900	1900	1900	1900	1900	1900	1900	1900
Total Lost time (s)	7.0	7.0	7.0	7.0	7.0	7.0		7.0			7.0	
Lane Util. Factor	1.00	0.95	1.00	1.00	0.95	1.00		1.00			1.00	
Frt	1.00	1.00	0.85	1.00	1.00	0.85		0.94			1.00	
Flt Protected	0.95	1.00	1.00	0.95	1.00	1.00		0.98			0.96	
Satd. Flow (prot)	1770	3505	1524	1736	3343	1583		1714			1785	
Flt Permitted	0.95	1.00	1.00	0.95	1.00	1.00		0.88			0.79	
Satd. Flow (perm)	1770	3505	1524	1736	3343	1583		1531			1465	
Peak-hour factor, PHF	0.92	0.92	0.92	0.92	0.92	0.92	0.92	0.92	0.92	0.92	0.92	0.92
Adj. Flow (vph)	18	1873	24	49	642	16	38	18	49	7	1	0
RTOR Reduction (vph)	0	0	5	0	0	5	0	18	0	0	0	0
Lane Group Flow (vph)	18	1873	19	49	642	11	0	87	0	0	8	0
Heavy Vehicles (%)	2%	3%	6%	4%	8%	2%	2%	2%	2%	2%	2%	2%
Turn Type	Prot		Perm	Prot		Perm	Perm			Perm		
Protected Phases	5	2		1	6			8			4	
Permitted Phases			2			6	8			4		
Actuated Green, G (s)	2.6	78.3	78.3	7.3	83.0	83.0		13.2			13.2	
Effective Green, g (s)	2.6	78.3	78.3	7.3	83.0	83.0		13.2			13.2	
Actuated g/C Ratio	0.02	0.65	0.65	0.06	0.69	0.69		0.11			0.11	
Clearance Time (s)	7.0	7.0	7.0	7.0	7.0	7.0		7.0			7.0	
Vehicle Extension (s)	3.0	3.0	3.0	3.0	3.0	3.0		3.0			3.0	
Lane Grp Cap (vph)	38	2291	996	106	2316	1097		169			161	
v/s Ratio Prot	0.01	c0.53		c0.03	c0.19							
v/s Ratio Perm			0.01			0.01		c0.06			0.01	
v/c Ratio	0.47	0.82	0.02	0.46	0.28	0.01		0.52			0.05	
Uniform Delay, d1	57.9	15.4	7.3	54.4	7.0	5.7		50.3			47.7	
Progression Factor	1.00	1.00	1.00	1.00	1.00	1.00		1.00			1.00	
Incremental Delay, d2	9.0	2.4	0.0	3.2	0.1	0.0		2.6			0.1	
Delay (s)	67.0	17.8	7.3	57.5	7.1	5.7		52.9			47.8	
Level of Service	E	B	A	E	A	A		D			D	
Approach Delay (s)		18.1			10.5			52.9			47.8	
Approach LOS		B			B			D			D	

Intersection Summary			
HCM Average Control Delay	17.6	HCM Level of Service	B
HCM Volume to Capacity ratio	0.81		
Actuated Cycle Length (s)	119.8	Sum of lost time (s)	28.0
Intersection Capacity Utilization	64.5%	ICU Level of Service	C
Analysis Period (min)	15		

c Critical Lane Group

HCM Unsignalized Intersection Capacity Analysis
200: Tall Cedars Pkwy & West Spine Road

LCPS (HS 7)
2020 Total Future

Movement	EBL	EBR	NBL	NBT	SBT	SBR
Lane Configurations						
Volume (veh/h)	163	247	194	1299	529	167
Sign Control	Stop			Free	Free	
Grade	0%			0%	0%	
Peak Hour Factor	0.92	0.92	0.92	0.92	0.92	0.92
Hourly flow rate (vph)	177	268	211	1412	575	182
Pedestrians						
Lane Width (ft)						
Walking Speed (ft/s)						
Percent Blockage						
Right turn flare (veh)						
Median type				None	None	
Median storage veh)						
Upstream signal (ft)						
pX, platoon unblocked						
vC, conflicting volume	1703	288	575			
vC1, stage 1 conf vol						
vC2, stage 2 conf vol						
vCu, unblocked vol	1703	288	575			
tC, single (s)	6.8	6.9	4.1			
tC, 2 stage (s)						
tF (s)	3.5	3.3	2.2			
p0 queue free %	0	62	79			
cM capacity (veh/h)	65	709	994			

Direction, Lane #	EB 1	EB 2	NB 1	NB 2	SB 1	SB 2	SB 3
Volume Total	177	268	682	941	288	288	182
Volume Left	177	0	211	0	0	0	0
Volume Right	0	268	0	0	0	0	182
cSH	65	709	994	1700	1700	1700	1700
Volume to Capacity	2.72	0.38	0.21	0.55	0.17	0.17	0.11
Queue Length 95th (ft)	444	44	20	0	0	0	0
Control Delay (s)	913.9	13.1	4.9	0.0	0.0	0.0	0.0
Lane LOS	F	B	A				
Approach Delay (s)	371.3		2.1		0.0		
Approach LOS	F						

Intersection Summary			
Average Delay	59.8		
Intersection Capacity Utilization	75.2%	ICU Level of Service	D
Analysis Period (min)	15		

Movement	EBL	EBT	EBR	WBL	WBT	WBR	NBL	NBT	NBR	SBL	SBT	SBR
Lane Configurations												
Volume (vph)	379	693	107	80	299	371	72	521	168	395	296	185
Ideal Flow (vphpl)	1900	1900	1900	1900	1900	1900	1900	1900	1900	1900	1900	1900
Total Lost time (s)	7.0	7.0	7.0	7.0	7.0	7.0	7.0	7.0		7.0	7.0	7.0
Lane Util. Factor	1.00	1.00	1.00	1.00	1.00	1.00	1.00	0.95		1.00	0.95	1.00
Frt	1.00	1.00	0.85	1.00	1.00	0.85	1.00	0.96		1.00	1.00	0.85
Flt Protected	0.95	1.00	1.00	0.95	1.00	1.00	0.95	1.00		0.95	1.00	1.00
Satd. Flow (prot)	1770	1863	1583	1770	1863	1583	1770	3410		1770	3539	1583
Flt Permitted	0.44	1.00	1.00	0.10	1.00	1.00	0.56	1.00		0.15	1.00	1.00
Satd. Flow (perm)	820	1863	1583	182	1863	1583	1037	3410		287	3539	1583
Peak-hour factor, PHF	0.92	0.92	0.92	0.92	0.92	0.92	0.92	0.92	0.92	0.92	0.92	0.92
Adj. Flow (vph)	412	753	116	87	325	403	78	566	183	429	322	201
RTOR Reduction (vph)	0	0	67	0	0	12	0	28	0	0	0	133
Lane Group Flow (vph)	412	753	49	87	325	391	78	721	0	429	322	68
Turn Type	pm+pt		pm+ov	pm+pt		pm+ov	pm+pt			pm+pt		pm+ov
Protected Phases	7	4	5	3	8	1	5	2		1	6	7
Permitted Phases	4		4	8		8	2			6		6
Actuated Green, G (s)	47.0	42.0	46.0	45.0	41.0	58.0	23.0	19.0		43.0	32.0	37.0
Effective Green, g (s)	47.0	42.0	46.0	45.0	41.0	58.0	23.0	19.0		43.0	32.0	37.0
Actuated g/C Ratio	0.43	0.38	0.42	0.41	0.37	0.53	0.21	0.17		0.39	0.29	0.34
Clearance Time (s)	7.0	7.0	7.0	7.0	7.0	7.0	7.0	7.0		7.0	7.0	7.0
Vehicle Extension (s)	3.0	3.0	3.0	3.0	3.0	3.0	3.0	3.0		3.0	3.0	3.0
Lane Grp Cap (vph)	394	711	763	132	694	935	243	589		341	1030	633
v/s Ratio Prot	c0.05	c0.40	0.00	0.02	0.17	0.06	0.01	0.21		c0.19	0.09	0.00
v/s Ratio Perm	0.40		0.03	0.25		0.18	0.06			c0.30		0.04
v/c Ratio	1.05	1.06	0.06	0.66	0.47	0.42	0.32	1.22		1.26	0.31	0.11
Uniform Delay, d1	32.9	34.0	19.1	26.7	26.2	15.8	36.0	45.5		31.1	30.4	25.1
Progression Factor	1.00	1.00	1.00	1.00	1.00	1.00	1.00	1.00		1.00	1.00	1.00
Incremental Delay, d2	57.8	50.5	0.0	11.3	0.5	0.3	0.8	115.3		137.8	0.2	0.1
Delay (s)	90.6	84.5	19.2	38.0	26.7	16.1	36.8	160.8		168.9	30.6	25.2
Level of Service	F	F	B	D	C	B	D	F		F	C	C
Approach Delay (s)		80.6			22.7			149.1			91.8	
Approach LOS		F			C			F			F	

Intersection Summary			
HCM Average Control Delay	85.8	HCM Level of Service	F
HCM Volume to Capacity ratio	1.03		
Actuated Cycle Length (s)	110.0	Sum of lost time (s)	14.0
Intersection Capacity Utilization	105.9%	ICU Level of Service	G
Analysis Period (min)	15		
c Critical Lane Group			

Movement	EBL	EBR	NBL	NBT	SBT	SBR
Lane Configurations						
Sign Control	Stop			Stop	Stop	
Volume (vph)	1	41	40	94	69	2
Peak Hour Factor	0.92	0.92	0.92	0.92	0.92	0.92
Hourly flow rate (vph)	1	45	43	102	75	2

Direction, Lane #	EB 1	EB 2	NB 1	NB 2	SB 1	SB 2
Volume Total (vph)	1	45	43	102	75	2
Volume Left (vph)	1	0	43	0	0	0
Volume Right (vph)	0	45	0	0	0	2
Hadj (s)	2.20	1.00	1.83	0.03	0.03	1.00
Departure Headway (s)	7.2	6.0	6.5	4.7	4.8	5.8
Degree Utilization, x	0.00	0.07	0.08	0.13	0.10	0.00
Capacity (veh/h)	474	570	540	743	728	608
Control Delay (s)	9.1	8.3	8.9	7.3	7.1	7.6
Approach Delay (s)	8.3		7.8		7.2	
Approach LOS	A		A		A	

Intersection Summary			
Delay	7.7		
HCM Level of Service	A		
Intersection Capacity Utilization	18.9%	ICU Level of Service	A
Analysis Period (min)	15		

Movement	EBL	EBR	NBL	NBT	SBT	SBR
Lane Configurations						
Sign Control	Stop			Stop	Stop	
Volume (vph)	36	170	247	98	62	49
Peak Hour Factor	0.92	0.92	0.92	0.92	0.92	0.92
Hourly flow rate (vph)	39	185	268	107	67	53

Direction, Lane #	EB 1	EB 2	NB 1	NB 2	SB 1	SB 2
Volume Total (vph)	39	185	268	107	67	53
Volume Left (vph)	39	0	268	0	0	0
Volume Right (vph)	0	185	0	0	0	53
Hadj (s)	0.53	-0.67	0.53	0.53	0.19	-0.67
Departure Headway (s)	6.3	5.1	5.8	5.8	5.7	4.9
Degree Utilization, x	0.07	0.26	0.43	0.17	0.11	0.07
Capacity (veh/h)	535	662	606	601	592	693
Control Delay (s)	8.5	8.7	11.9	8.8	8.2	7.1
Approach Delay (s)	8.7		11.0		7.7	
Approach LOS	A		B		A	

Intersection Summary			
Delay	9.7		
HCM Level of Service	A		
Intersection Capacity Utilization	30.4%	ICU Level of Service	A
Analysis Period (min)	15		

Movement	EBL	EBT	EBR	WBL	WBT	WBR	NBL	NBT	NBR	SBL	SBT	SBR
Lane Configurations												
Volume (veh/h)	206	460	66	63	214	107	62	46	182	100	38	160
Sign Control		Free			Free			Stop			Stop	
Grade		0%			0%			0%			0%	
Peak Hour Factor	0.92	0.92	0.92	0.92	0.92	0.92	0.92	0.92	0.92	0.92	0.92	0.92
Hourly flow rate (vph)	224	500	72	68	233	116	67	50	198	109	41	174
Pedestrians												
Lane Width (ft)												
Walking Speed (ft/s)												
Percent Blockage												
Right turn flare (veh)									12			12
Median type		None			None							
Median storage veh)												
Upstream signal (ft)												
pX, platoon unblocked												
vC, conflicting volume	349			572			1425	1434	500	1441	1389	233
vC1, stage 1 conf vol												
vC2, stage 2 conf vol												
vCu, unblocked vol	349			572			1425	1434	500	1441	1389	233
tC, single (s)	4.2			4.1			7.1	6.5	6.2	7.1	6.5	6.2
tC, 2 stage (s)												
tF (s)	2.3			2.2			3.5	4.0	3.3	3.5	4.0	3.3
p0 queue free %	81			93			0	50	65	0	61	78
cM capacity (veh/h)	1156			1001			51	101	571	36	107	802

Direction, Lane #	EB 1	EB 2	EB 3	WB 1	WB 2	WB 3	NB 1	NB 2	SB 1	SB 2
Volume Total	224	500	72	68	233	116	67	248	109	215
Volume Left	224	0	0	68	0	0	67	0	109	0
Volume Right	0	0	72	0	0	116	0	198	0	174
cSH	1156	1700	1700	1001	1700	1700	51	498	36	558
Volume to Capacity	0.19	0.29	0.04	0.07	0.14	0.07	1.32	0.50	3.00	0.39
Queue Length 95th (ft)	18	0	0	5	0	0	154	68	Err	45
Control Delay (s)	8.9	0.0	0.0	8.9	0.0	0.0	366.6	26.2	Err	19.9
Lane LOS	A			A			F	D	F	C
Approach Delay (s)	2.5			1.5			99.0		3368.6	
Approach LOS							F		F	

Intersection Summary			
Average Delay	607.3		
Intersection Capacity Utilization	51.0%	ICU Level of Service	A
Analysis Period (min)	15		

HCM Signalized Intersection Capacity Analysis
100: Route 50 & Goshen Road

LCPS (HS 7)
2020 Total Future

Movement	EBL	EBT	EBR	WBL	WBT	WBR	NBL	NBT	NBR	SBL	SBT	SBR
Lane Configurations												
Volume (vph)	5	715	32	39	1279	2	22	1	37	1	4	2
Ideal Flow (vphpl)	1900	1900	1900	1900	1900	1900	1900	1900	1900	1900	1900	1900
Total Lost time (s)	7.0	7.0	7.0	7.0	7.0	7.0		7.0			7.0	
Lane Util. Factor	1.00	0.95	1.00	1.00	0.95	1.00		1.00			1.00	
Frt	1.00	1.00	0.85	1.00	1.00	0.85		0.92			0.96	
Flt Protected	0.95	1.00	1.00	0.95	1.00	1.00		0.98			0.99	
Satd. Flow (prot)	1770	3505	1583	1770	3343	1583		1618			1778	
Flt Permitted	0.95	1.00	1.00	0.95	1.00	1.00		0.88			0.94	
Satd. Flow (perm)	1770	3505	1583	1770	3343	1583		1443			1679	
Peak-hour factor, PHF	0.92	0.92	0.92	0.92	0.92	0.92	0.92	0.92	0.92	0.92	0.92	0.92
Adj. Flow (vph)	5	777	35	42	1390	2	24	1	40	1	4	2
RTOR Reduction (vph)	0	0	18	0	0	0	0	32	0	0	2	0
Lane Group Flow (vph)	5	777	17	42	1390	2	0	33	0	0	5	0
Heavy Vehicles (%)	2%	3%	2%	2%	8%	2%	7%	2%	5%	2%	2%	2%
Turn Type	Prot		Perm	Prot		Perm	Perm			Perm		
Protected Phases	5	2		1	6			8			4	
Permitted Phases			2			6	8			4		
Actuated Green, G (s)	0.8	30.5	30.5	4.4	34.1	34.1		7.6			7.6	
Effective Green, g (s)	0.8	30.5	30.5	4.4	34.1	34.1		7.6			7.6	
Actuated g/C Ratio	0.01	0.48	0.48	0.07	0.54	0.54		0.12			0.12	
Clearance Time (s)	7.0	7.0	7.0	7.0	7.0	7.0		7.0			7.0	
Vehicle Extension (s)	3.0	3.0	3.0	3.0	3.0	3.0		3.0			3.0	
Lane Grp Cap (vph)	22	1684	760	123	1795	850		173			201	
v/s Ratio Prot	0.00	0.22		c0.02	c0.42							
v/s Ratio Perm			0.01			0.00		c0.02			0.00	
v/c Ratio	0.23	0.46	0.02	0.34	0.77	0.00		0.19			0.03	
Uniform Delay, d1	31.0	11.0	8.7	28.2	11.7	6.8		25.2			24.7	
Progression Factor	1.00	1.00	1.00	1.00	1.00	1.00		1.00			1.00	
Incremental Delay, d2	5.2	0.2	0.0	1.7	2.2	0.0		0.5			0.1	
Delay (s)	36.3	11.2	8.7	29.8	13.8	6.8		25.7			24.7	
Level of Service	D	B	A	C	B	A		C			C	
Approach Delay (s)		11.3			14.3			25.7			24.7	
Approach LOS		B			B			C			C	

Intersection Summary			
HCM Average Control Delay	13.6	HCM Level of Service	B
HCM Volume to Capacity ratio	0.69		
Actuated Cycle Length (s)	63.5	Sum of lost time (s)	21.0
Intersection Capacity Utilization	54.5%	ICU Level of Service	A
Analysis Period (min)	15		

c Critical Lane Group

HCM Unsignalized Intersection Capacity Analysis
200: Tall Cedars Pkwy & West Spine Road

LCPS (HS 7)
2020 Total Future

Movement	EBL	EBR	NBL	NBT	SBT	SBR
Lane Configurations						
Volume (veh/h)	117	204	140	744	1204	130
Sign Control	Stop			Free	Free	
Grade	0%			0%	0%	
Peak Hour Factor	0.92	0.92	0.92	0.92	0.92	0.92
Hourly flow rate (vph)	127	222	152	809	1309	141
Pedestrians						
Lane Width (ft)						
Walking Speed (ft/s)						
Percent Blockage						
Right turn flare (veh)						
Median type				None	None	
Median storage veh)						
Upstream signal (ft)						
pX, platoon unblocked						
vC, conflicting volume	2017	654	1309			
vC1, stage 1 conf vol						
vC2, stage 2 conf vol						
vCu, unblocked vol	2017	654	1309			
tC, single (s)	6.8	6.9	4.1			
tC, 2 stage (s)						
tF (s)	3.5	3.3	2.2			
p0 queue free %	0	46	71			
cM capacity (veh/h)	36	409	525			

Direction, Lane #	EB 1	EB 2	NB 1	NB 2	SB 1	SB 2	SB 3
Volume Total	127	222	422	539	654	654	141
Volume Left	127	0	152	0	0	0	0
Volume Right	0	222	0	0	0	0	141
cSH	36	409	525	1700	1700	1700	1700
Volume to Capacity	3.53	0.54	0.29	0.32	0.38	0.38	0.08
Queue Length 95th (ft)	Err	78	30	0	0	0	0
Control Delay (s)	Err	23.7	8.5	0.0	0.0	0.0	0.0
Lane LOS	F	C	A				
Approach Delay (s)	3659.6		3.7		0.0		
Approach LOS	F						

Intersection Summary			
Average Delay	464.0		
Intersection Capacity Utilization	74.4%	ICU Level of Service	D
Analysis Period (min)	15		

HCM Signalized Intersection Capacity Analysis
300: Braddock Road & Gum Spring Road

LCPS (HS 7)
2020 Total Future

Movement	EBL	EBT	EBR	WBL	WBT	WBR	NBL	NBT	NBR	SBL	SBT	SBR
Lane Configurations												
Volume (vph)	255	373	80	99	568	320	93	339	56	347	499	321
Ideal Flow (vphpl)	1900	1900	1900	1900	1900	1900	1900	1900	1900	1900	1900	1900
Total Lost time (s)	7.0	7.0	7.0	7.0	7.0	7.0	7.0	7.0		7.0	7.0	7.0
Lane Util. Factor	1.00	1.00	1.00	1.00	1.00	1.00	1.00	0.95		1.00	0.95	1.00
Frt	1.00	1.00	0.85	1.00	1.00	0.85	1.00	0.98		1.00	1.00	0.85
Flt Protected	0.95	1.00	1.00	0.95	1.00	1.00	0.95	1.00		0.95	1.00	1.00
Satd. Flow (prot)	1770	1863	1583	1770	1863	1583	1770	3464		1770	3539	1583
Flt Permitted	0.10	1.00	1.00	0.47	1.00	1.00	0.33	1.00		0.28	1.00	1.00
Satd. Flow (perm)	177	1863	1583	877	1863	1583	616	3464		524	3539	1583
Peak-hour factor, PHF	0.92	0.92	0.92	0.92	0.92	0.92	0.92	0.92	0.92	0.92	0.92	0.92
Adj. Flow (vph)	277	405	87	108	617	348	101	368	61	377	542	349
RTOR Reduction (vph)	0	0	48	0	0	71	0	12	0	0	0	69
Lane Group Flow (vph)	277	405	39	108	617	277	101	417	0	377	542	280
Turn Type	pm+pt		pm+ov	pm+pt		pm+ov	pm+pt			pm+pt		pm+ov
Protected Phases	7	4	5	3	8	1	5	2		1	6	7
Permitted Phases	4		4	8		8	2			6		6
Actuated Green, G (s)	58.2	42.6	46.6	43.7	35.1	43.1	21.6	17.6		29.6	21.6	37.7
Effective Green, g (s)	58.2	42.6	46.6	43.7	35.1	43.1	21.6	17.6		29.6	21.6	37.7
Actuated g/C Ratio	0.56	0.41	0.44	0.42	0.33	0.41	0.21	0.17		0.28	0.21	0.36
Clearance Time (s)	7.0	7.0	7.0	7.0	7.0	7.0	7.0	7.0		7.0	7.0	7.0
Vehicle Extension (s)	3.0	3.0	3.0	3.0	3.0	3.0	3.0	3.0		3.0	3.0	3.0
Lane Grp Cap (vph)	343	757	810	439	624	757	171	582		243	729	675
v/s Ratio Prot	c0.12	0.22	0.00	0.02	c0.33	0.03	0.02	0.12		c0.12	0.15	0.06
v/s Ratio Perm	0.32		0.02	0.08		0.15	0.10			c0.32		0.11
v/c Ratio	0.81	0.54	0.05	0.25	0.99	0.37	0.59	0.72		1.55	0.74	0.42
Uniform Delay, d1	28.2	23.6	16.5	19.0	34.7	21.4	36.1	41.2		35.5	39.0	25.3
Progression Factor	1.00	1.00	1.00	1.00	1.00	1.00	1.00	1.00		1.00	1.00	1.00
Incremental Delay, d2	13.0	0.7	0.0	0.3	32.8	0.3	5.4	4.2		267.5	4.1	0.4
Delay (s)	41.2	24.3	16.5	19.3	67.5	21.7	41.5	45.4		303.0	43.1	25.7
Level of Service	D	C	B	B	E	C	D	D		F	D	C
Approach Delay (s)		29.5			47.8			44.7			115.6	
Approach LOS		C			D			D			F	

Intersection Summary			
HCM Average Control Delay	67.1	HCM Level of Service	E
HCM Volume to Capacity ratio	1.22		
Actuated Cycle Length (s)	104.8	Sum of lost time (s)	28.0
Intersection Capacity Utilization	97.7%	ICU Level of Service	F
Analysis Period (min)	15		
c Critical Lane Group			

HCM Unsignalized Intersection Capacity Analysis
600: Road A & North Star Blvd.

LCPS (HS 7)
2020 Total Future

Movement	EBL	EBR	NBL	NBT	SBT	SBR
Lane Configurations						
Sign Control	Stop			Stop	Stop	
Volume (vph)	2	28	29	77	117	1
Peak Hour Factor	0.92	0.92	0.92	0.92	0.92	0.92
Hourly flow rate (vph)	2	30	32	84	127	1

Direction, Lane #	EB 1	EB 2	NB 1	NB 2	SB 1	SB 2
Volume Total (vph)	2	30	32	84	127	1
Volume Left (vph)	2	0	32	0	0	0
Volume Right (vph)	0	30	0	0	0	1
Hadj (s)	2.20	1.00	2.20	0.03	0.03	1.00
Departure Headway (s)	7.3	6.1	6.9	4.7	4.7	5.7
Degree Utilization, x	0.00	0.05	0.06	0.11	0.17	0.00
Capacity (veh/h)	471	564	512	745	742	617
Control Delay (s)	9.1	8.2	9.1	7.1	7.5	7.5
Approach Delay (s)	8.3		7.7		7.5	
Approach LOS	A		A		A	

Intersection Summary			
Delay	7.7		
HCM Level of Service	A		
Intersection Capacity Utilization	18.3%	ICU Level of Service	A
Analysis Period (min)	15		

Movement	EBL	EBR	NBL	NBT	SBT	SBR
Lane Configurations						
Sign Control	Stop			Stop	Stop	
Volume (vph)	35	178	123	71	120	25
Peak Hour Factor	0.92	0.92	0.92	0.92	0.92	0.92
Hourly flow rate (vph)	38	193	134	77	130	27

Direction, Lane #	EB 1	EB 2	NB 1	NB 2	SB 1	SB 2
Volume Total (vph)	38	193	134	77	130	27
Volume Left (vph)	38	0	134	0	0	0
Volume Right (vph)	0	193	0	0	0	27
Hadj (s)	0.53	-0.67	0.53	0.17	0.44	-0.67
Departure Headway (s)	6.0	4.8	5.8	5.4	5.8	4.7
Degree Utilization, x	0.06	0.26	0.22	0.12	0.21	0.04
Capacity (veh/h)	566	709	595	631	593	727
Control Delay (s)	8.2	8.2	9.2	8.0	9.1	6.6
Approach Delay (s)	8.2		8.8		8.7	
Approach LOS	A		A		A	

Intersection Summary			
Delay	8.5		
HCM Level of Service	A		
Intersection Capacity Utilization	24.0%	ICU Level of Service	A
Analysis Period (min)	15		

Movement	EBL	EBT	EBR	WBL	WBT	WBR	NBL	NBT	NBR	SBL	SBT	SBR
Lane Configurations												
Volume (veh/h)	115	316	64	163	467	85	69	35	90	97	49	132
Sign Control		Free			Free			Stop			Stop	
Grade		0%			0%			0%			0%	
Peak Hour Factor	0.92	0.92	0.92	0.92	0.92	0.92	0.92	0.92	0.92	0.92	0.92	0.92
Hourly flow rate (vph)	125	343	70	177	508	92	75	38	98	105	53	143
Pedestrians												
Lane Width (ft)												
Walking Speed (ft/s)												
Percent Blockage												
Right turn flare (veh)									12			12
Median type		None			None							
Median storage veh)												
Upstream signal (ft)												
pX, platoon unblocked												
vC, conflicting volume	600			413			1554	1548	343	1523	1525	508
vC1, stage 1 conf vol												
vC2, stage 2 conf vol												
vCu, unblocked vol	600			413			1554	1548	343	1523	1525	508
tC, single (s)	4.3			4.1			7.1	6.5	6.2	7.1	6.5	6.2
tC, 2 stage (s)												
tF (s)	2.4			2.2			3.5	4.0	3.3	3.5	4.0	3.3
p0 queue free %	86			85			0	54	86	0	38	74
cM capacity (veh/h)	886			1146			28	83	699	43	86	559

Direction, Lane #	EB 1	EB 2	EB 3	WB 1	WB 2	WB 3	NB 1	NB 2	SB 1	SB 2
Volume Total	125	343	70	177	508	92	75	136	105	197
Volume Left	125	0	0	177	0	0	75	0	105	0
Volume Right	0	0	70	0	0	92	0	98	0	143
cSH	886	1700	1700	1146	1700	1700	28	296	43	316
Volume to Capacity	0.14	0.20	0.04	0.15	0.30	0.05	2.68	0.46	2.46	0.62
Queue Length 95th (ft)	12	0	0	14	0	0	225	57	283	98
Control Delay (s)	9.7	0.0	0.0	8.7	0.0	0.0	1058.5	30.6	865.3	37.0
Lane LOS	A			A			F	D	F	E
Approach Delay (s)	2.3			2.0			396.2		326.0	
Approach LOS							F		F	

Intersection Summary			
Average Delay	101.1		
Intersection Capacity Utilization	53.0%	ICU Level of Service	A
Analysis Period (min)	15		

Movement	EBL	EBT	EBR	WBL	WBT	WBR	NBL	NBT	NBR	SBL	SBT	SBR
Lane Configurations												
Volume (vph)	17	1723	22	45	591	15	35	17	45	6	1	0
Ideal Flow (vphpl)	1900	1900	1900	1900	1900	1900	1900	1900	1900	1900	1900	1900
Total Lost time (s)	7.0	7.0	7.0	7.0	7.0	7.0		7.0			7.0	
Lane Util. Factor	1.00	0.95	1.00	1.00	0.95	1.00		1.00			1.00	
Frt	1.00	1.00	0.85	1.00	1.00	0.85		0.94			1.00	
Flt Protected	0.95	1.00	1.00	0.95	1.00	1.00		0.98			0.96	
Satd. Flow (prot)	1770	3505	1524	1736	3343	1583		1714			1785	
Flt Permitted	0.95	1.00	1.00	0.95	1.00	1.00		0.88			0.79	
Satd. Flow (perm)	1770	3505	1524	1736	3343	1583		1531			1465	
Peak-hour factor, PHF	0.92	0.92	0.92	0.92	0.92	0.92	0.92	0.92	0.92	0.92	0.92	0.92
Adj. Flow (vph)	18	1873	24	49	642	16	38	18	49	7	1	0
RTOR Reduction (vph)	0	0	5	0	0	5	0	18	0	0	0	0
Lane Group Flow (vph)	18	1873	19	49	642	11	0	87	0	0	8	0
Heavy Vehicles (%)	2%	3%	6%	4%	8%	2%	2%	2%	2%	2%	2%	2%
Turn Type	Prot		Perm	Prot		Perm	Perm			Perm		
Protected Phases	5	2		1	6			8			4	
Permitted Phases			2			6	8			4		
Actuated Green, G (s)	2.6	78.3	78.3	7.3	83.0	83.0		13.2			13.2	
Effective Green, g (s)	2.6	78.3	78.3	7.3	83.0	83.0		13.2			13.2	
Actuated g/C Ratio	0.02	0.65	0.65	0.06	0.69	0.69		0.11			0.11	
Clearance Time (s)	7.0	7.0	7.0	7.0	7.0	7.0		7.0			7.0	
Vehicle Extension (s)	3.0	3.0	3.0	3.0	3.0	3.0		3.0			3.0	
Lane Grp Cap (vph)	38	2291	996	106	2316	1097		169			161	
v/s Ratio Prot	0.01	c0.53		c0.03	c0.19							
v/s Ratio Perm			0.01			0.01		c0.06			0.01	
v/c Ratio	0.47	0.82	0.02	0.46	0.28	0.01		0.52			0.05	
Uniform Delay, d1	57.9	15.4	7.3	54.4	7.0	5.7		50.3			47.7	
Progression Factor	1.00	1.00	1.00	1.00	1.00	1.00		1.00			1.00	
Incremental Delay, d2	9.0	2.4	0.0	3.2	0.1	0.0		2.6			0.1	
Delay (s)	67.0	17.8	7.3	57.5	7.1	5.7		52.9			47.8	
Level of Service	E	B	A	E	A	A		D			D	
Approach Delay (s)		18.1			10.5			52.9			47.8	
Approach LOS		B			B			D			D	

Intersection Summary			
HCM Average Control Delay	17.6	HCM Level of Service	B
HCM Volume to Capacity ratio	0.81		
Actuated Cycle Length (s)	119.8	Sum of lost time (s)	28.0
Intersection Capacity Utilization	64.5%	ICU Level of Service	C
Analysis Period (min)	15		

c Critical Lane Group

Movement	EBL	EBR	NBL	NBT	SBT	SBR
Lane Configurations						
Volume (vph)	163	247	194	1299	529	167
Ideal Flow (vphpl)	1900	1900	1900	1900	1900	1900
Total Lost time (s)	7.0	7.0		7.0	7.0	7.0
Lane Util. Factor	1.00	1.00		0.95	0.95	1.00
Frt	1.00	0.85		1.00	1.00	0.85
Flt Protected	0.95	1.00		0.99	1.00	1.00
Satd. Flow (prot)	1770	1583		3516	3539	1583
Flt Permitted	0.95	1.00		0.76	1.00	1.00
Satd. Flow (perm)	1770	1583		2690	3539	1583
Peak-hour factor, PHF	0.92	0.92	0.92	0.92	0.92	0.92
Adj. Flow (vph)	177	268	211	1412	575	182
RTOR Reduction (vph)	0	224	0	0	0	58
Lane Group Flow (vph)	177	44	0	1623	575	124
Turn Type		Perm	Perm			Perm
Protected Phases	4			2	6	
Permitted Phases		4	2			6
Actuated Green, G (s)	14.8	14.8		61.2	61.2	61.2
Effective Green, g (s)	14.8	14.8		61.2	61.2	61.2
Actuated g/C Ratio	0.16	0.16		0.68	0.68	0.68
Clearance Time (s)	7.0	7.0		7.0	7.0	7.0
Vehicle Extension (s)	3.0	3.0		3.0	3.0	3.0
Lane Grp Cap (vph)	291	260		1829	2407	1076
v/s Ratio Prot	c0.10				0.16	
v/s Ratio Perm		0.03		c0.60		0.08
v/c Ratio	0.61	0.17		0.89	0.24	0.12
Uniform Delay, d1	34.9	32.3		11.6	5.5	5.0
Progression Factor	1.00	1.00		1.00	1.00	1.00
Incremental Delay, d2	3.6	0.3		5.6	0.1	0.0
Delay (s)	38.5	32.6		17.3	5.6	5.0
Level of Service	D	C		B	A	A
Approach Delay (s)	35.0			17.3	5.4	
Approach LOS	C			B	A	

Intersection Summary			
HCM Average Control Delay	16.9	HCM Level of Service	B
HCM Volume to Capacity ratio	0.83		
Actuated Cycle Length (s)	90.0	Sum of lost time (s)	14.0
Intersection Capacity Utilization	82.7%	ICU Level of Service	E
Analysis Period (min)	15		

c Critical Lane Group

Movement	EBL	EBT	EBR	WBL	WBT	WBR	NBL	NBT	NBR	SBL	SBT	SBR
Lane Configurations												
Volume (vph)	379	693	107	80	299	371	72	521	168	395	296	185
Ideal Flow (vphpl)	1900	1900	1900	1900	1900	1900	1900	1900	1900	1900	1900	1900
Total Lost time (s)	7.0	7.0	7.0	7.0	7.0	7.0	7.0	7.0	7.0	7.0	7.0	7.0
Lane Util. Factor	0.97	0.95	1.00	1.00	0.95	1.00	1.00	0.95	1.00	1.00	0.95	1.00
Frt	1.00	1.00	0.85	1.00	1.00	0.85	1.00	1.00	0.85	1.00	1.00	0.85
Flt Protected	0.95	1.00	1.00	0.95	1.00	1.00	0.95	1.00	1.00	0.95	1.00	1.00
Satd. Flow (prot)	3433	3539	1583	1770	3539	1583	1770	3539	1583	1770	3539	1583
Flt Permitted	0.95	1.00	1.00	0.32	1.00	1.00	0.56	1.00	1.00	0.16	1.00	1.00
Satd. Flow (perm)	3433	3539	1583	590	3539	1583	1037	3539	1583	291	3539	1583
Peak-hour factor, PHF	0.92	0.92	0.92	0.92	0.92	0.92	0.92	0.92	0.92	0.92	0.92	0.92
Adj. Flow (vph)	412	753	116	87	325	403	78	566	183	429	322	201
RTOR Reduction (vph)	0	0	79	0	0	17	0	0	58	0	0	86
Lane Group Flow (vph)	412	753	37	87	325	386	78	566	125	429	322	115
Turn Type	Prot		pm+ov	pm+pt		pm+ov	pm+pt		pm+ov	pm+pt		pm+ov
Protected Phases	7	4	5	3	8	1	5	2	3	1	6	7
Permitted Phases			4	8		8	2		2	6		6
Actuated Green, G (s)	17.0	27.7	32.7	20.7	15.7	38.9	23.6	18.6	23.6	48.8	36.8	53.8
Effective Green, g (s)	17.0	27.7	32.7	20.7	15.7	38.9	23.6	18.6	23.6	48.8	36.8	53.8
Actuated g/C Ratio	0.17	0.27	0.32	0.20	0.15	0.38	0.23	0.18	0.23	0.48	0.36	0.52
Clearance Time (s)	7.0	7.0	7.0	7.0	7.0	7.0	7.0	7.0	7.0	7.0	7.0	7.0
Vehicle Extension (s)	3.0	3.0	3.0	3.0	3.0	3.0	3.0	3.0	3.0	3.0	3.0	3.0
Lane Grp Cap (vph)	569	956	613	177	542	709	275	642	473	473	1271	939
v/s Ratio Prot	c0.12	c0.21	0.00	0.02	0.09	0.12	0.01	0.16	0.01	c0.21	0.09	0.02
v/s Ratio Perm			0.02	0.08		0.12	0.05		0.07	c0.23		0.05
v/c Ratio	0.72	0.79	0.06	0.49	0.60	0.54	0.28	0.88	0.26	0.91	0.25	0.12
Uniform Delay, d1	40.5	34.7	24.2	34.4	40.5	24.9	31.8	40.9	32.3	26.8	23.2	12.4
Progression Factor	1.00	1.00	1.00	1.00	1.00	1.00	1.00	1.00	1.00	1.00	1.00	1.00
Incremental Delay, d2	4.5	4.4	0.0	2.1	1.8	0.9	0.6	13.5	0.3	20.8	0.1	0.1
Delay (s)	45.1	39.0	24.3	36.5	42.3	25.7	32.3	54.3	32.6	47.6	23.3	12.4
Level of Service	D	D	C	D	D	C	C	D	C	D	C	B
Approach Delay (s)		39.6			33.5			47.5			32.0	
Approach LOS		D			C			D			C	

Intersection Summary			
HCM Average Control Delay	38.1	HCM Level of Service	D
HCM Volume to Capacity ratio	0.85		
Actuated Cycle Length (s)	102.5	Sum of lost time (s)	21.0
Intersection Capacity Utilization	83.2%	ICU Level of Service	E
Analysis Period (min)	15		
c Critical Lane Group			

Movement	EBL	EBR	NBL	NBT	SBT	SBR
Lane Configurations						
Sign Control	Stop			Stop	Stop	
Volume (vph)	1	41	40	94	69	2
Peak Hour Factor	0.92	0.92	0.92	0.92	0.92	0.92
Hourly flow rate (vph)	1	45	43	102	75	2

Direction, Lane #	EB 1	EB 2	NB 1	NB 2	SB 1	SB 2
Volume Total (vph)	1	45	43	102	75	2
Volume Left (vph)	1	0	43	0	0	0
Volume Right (vph)	0	45	0	0	0	2
Hadj (s)	2.20	1.00	1.83	0.03	0.03	1.00
Departure Headway (s)	7.2	6.0	6.5	4.7	4.8	5.8
Degree Utilization, x	0.00	0.07	0.08	0.13	0.10	0.00
Capacity (veh/h)	474	570	540	743	728	608
Control Delay (s)	9.1	8.3	8.9	7.3	7.1	7.6
Approach Delay (s)	8.3		7.8		7.2	
Approach LOS	A		A		A	

Intersection Summary			
Delay	7.7		
HCM Level of Service	A		
Intersection Capacity Utilization	18.9%	ICU Level of Service	A
Analysis Period (min)	15		

Movement	EBL	EBR	NBL	NBT	SBT	SBR
Lane Configurations						
Sign Control	Stop			Stop	Stop	
Volume (vph)	36	170	247	98	62	49
Peak Hour Factor	0.92	0.92	0.92	0.92	0.92	0.92
Hourly flow rate (vph)	39	185	268	107	67	53

Direction, Lane #	EB 1	EB 2	NB 1	NB 2	SB 1	SB 2
Volume Total (vph)	39	185	268	107	67	53
Volume Left (vph)	39	0	268	0	0	0
Volume Right (vph)	0	185	0	0	0	53
Hadj (s)	0.53	-0.67	0.53	0.53	0.19	-0.67
Departure Headway (s)	6.3	5.1	5.8	5.8	5.7	4.9
Degree Utilization, x	0.07	0.26	0.43	0.17	0.11	0.07
Capacity (veh/h)	535	662	606	601	592	693
Control Delay (s)	8.5	8.7	11.9	8.8	8.2	7.1
Approach Delay (s)	8.7		11.0		7.7	
Approach LOS	A		B		A	

Intersection Summary			
Delay	9.7		
HCM Level of Service	A		
Intersection Capacity Utilization	30.4%	ICU Level of Service	A
Analysis Period (min)	15		

Movement	EBL	EBT	EBR	WBL	WBT	WBR	NBL	NBT	NBR	SBL	SBT	SBR
Lane Configurations												
Volume (vph)	206	460	66	63	214	107	62	46	182	100	38	160
Ideal Flow (vphpl)	1900	1900	1900	1900	1900	1900	1900	1900	1900	1900	1900	1900
Total Lost time (s)	7.0	7.0	7.0	7.0	7.0	7.0	7.0	7.0	7.0	7.0	7.0	7.0
Lane Util. Factor	1.00	1.00	1.00	1.00	1.00	1.00	1.00	1.00	1.00	1.00	1.00	1.00
Frt	1.00	1.00	0.85	1.00	1.00	0.85	1.00	1.00	0.85	1.00	1.00	0.85
Flt Protected	0.95	1.00	1.00	0.95	1.00	1.00	0.95	1.00	1.00	0.95	1.00	1.00
Satd. Flow (prot)	1612	1863	1583	1770	1863	1524	1770	1863	1583	1770	1863	1553
Flt Permitted	0.60	1.00	1.00	0.24	1.00	1.00	0.73	1.00	1.00	0.46	1.00	1.00
Satd. Flow (perm)	1017	1863	1583	447	1863	1524	1360	1863	1583	855	1863	1553
Peak-hour factor, PHF	0.92	0.92	0.92	0.92	0.92	0.92	0.92	0.92	0.92	0.92	0.92	0.92
Adj. Flow (vph)	224	500	72	68	233	116	67	50	198	109	41	174
RTOR Reduction (vph)	0	0	45	0	0	63	0	0	163	0	0	130
Lane Group Flow (vph)	224	500	27	68	233	53	67	50	35	109	41	44
Heavy Vehicles (%)	12%	2%	2%	2%	2%	6%	2%	2%	2%	2%	2%	4%
Turn Type	pm+pt		pm+ov	pm+pt		pm+ov	pm+pt		pm+ov	pm+pt		pm+ov
Protected Phases	5	2	3	1	6	7	3	8	1	7	4	5
Permitted Phases	2		2	6		6	8		8	4		4
Actuated Green, G (s)	29.3	25.2	29.1	29.3	25.2	34.6	13.4	9.5	13.6	24.4	15.0	19.1
Effective Green, g (s)	29.3	25.2	29.1	29.3	25.2	34.6	13.4	9.5	13.6	24.4	15.0	19.1
Actuated g/C Ratio	0.38	0.33	0.38	0.38	0.33	0.45	0.18	0.12	0.18	0.32	0.20	0.25
Clearance Time (s)	7.0	7.0	7.0	7.0	7.0	7.0	7.0	7.0	7.0	7.0	7.0	7.0
Vehicle Extension (s)	3.0	3.0	3.0	3.0	3.0	3.0	3.0	3.0	3.0	3.0	3.0	3.0
Lane Grp Cap (vph)	423	616	750	243	616	832	260	232	428	387	367	532
v/s Ratio Prot	c0.03	c0.27	0.00	0.02	0.13	0.01	0.01	0.03	0.00	c0.03	0.02	0.00
v/s Ratio Perm	0.18		0.02	0.09		0.03	0.03		0.02	c0.06		0.02
v/c Ratio	0.53	0.81	0.04	0.28	0.38	0.06	0.26	0.22	0.08	0.28	0.11	0.08
Uniform Delay, d1	17.3	23.3	14.8	16.1	19.5	11.7	26.9	30.0	26.1	19.0	25.1	21.8
Progression Factor	1.00	1.00	1.00	1.00	1.00	1.00	1.00	1.00	1.00	1.00	1.00	1.00
Incremental Delay, d2	1.2	8.0	0.0	0.6	0.4	0.0	0.5	0.5	0.1	0.4	0.1	0.1
Delay (s)	18.5	31.3	14.8	16.8	19.9	11.7	27.4	30.5	26.2	19.4	25.3	21.9
Level of Service	B	C	B	B	B	B	C	C	C	B	C	C
Approach Delay (s)		26.2			17.1			27.1			21.5	
Approach LOS		C			B			C			C	

Intersection Summary			
HCM Average Control Delay	23.5	HCM Level of Service	C
HCM Volume to Capacity ratio	0.60		
Actuated Cycle Length (s)	76.2	Sum of lost time (s)	28.0
Intersection Capacity Utilization	58.5%	ICU Level of Service	B
Analysis Period (min)	15		

c Critical Lane Group

HCM Signalized Intersection Capacity Analysis
100: Route 50 & Goshen Road

LCPS (HS 7)
2020 Total Future

Movement	EBL	EBT	EBR	WBL	WBT	WBR	NBL	NBT	NBR	SBL	SBT	SBR
Lane Configurations												
Volume (vph)	5	715	32	39	1279	2	22	1	37	1	4	2
Ideal Flow (vphpl)	1900	1900	1900	1900	1900	1900	1900	1900	1900	1900	1900	1900
Total Lost time (s)	7.0	7.0	7.0	7.0	7.0	7.0		7.0			7.0	
Lane Util. Factor	1.00	0.95	1.00	1.00	0.95	1.00		1.00			1.00	
Frt	1.00	1.00	0.85	1.00	1.00	0.85		0.92			0.96	
Flt Protected	0.95	1.00	1.00	0.95	1.00	1.00		0.98			0.99	
Satd. Flow (prot)	1770	3505	1583	1770	3343	1583		1618			1778	
Flt Permitted	0.95	1.00	1.00	0.95	1.00	1.00		0.88			0.94	
Satd. Flow (perm)	1770	3505	1583	1770	3343	1583		1443			1679	
Peak-hour factor, PHF	0.92	0.92	0.92	0.92	0.92	0.92	0.92	0.92	0.92	0.92	0.92	0.92
Adj. Flow (vph)	5	777	35	42	1390	2	24	1	40	1	4	2
RTOR Reduction (vph)	0	0	18	0	0	0	0	32	0	0	2	0
Lane Group Flow (vph)	5	777	17	42	1390	2	0	33	0	0	5	0
Heavy Vehicles (%)	2%	3%	2%	2%	8%	2%	7%	2%	5%	2%	2%	2%
Turn Type	Prot		Perm	Prot		Perm	Perm			Perm		
Protected Phases	5	2		1	6			8			4	
Permitted Phases			2			6	8			4		
Actuated Green, G (s)	0.8	30.5	30.5	4.4	34.1	34.1		7.6			7.6	
Effective Green, g (s)	0.8	30.5	30.5	4.4	34.1	34.1		7.6			7.6	
Actuated g/C Ratio	0.01	0.48	0.48	0.07	0.54	0.54		0.12			0.12	
Clearance Time (s)	7.0	7.0	7.0	7.0	7.0	7.0		7.0			7.0	
Vehicle Extension (s)	3.0	3.0	3.0	3.0	3.0	3.0		3.0			3.0	
Lane Grp Cap (vph)	22	1684	760	123	1795	850		173			201	
v/s Ratio Prot	0.00	0.22		c0.02	c0.42							
v/s Ratio Perm			0.01			0.00		c0.02			0.00	
v/c Ratio	0.23	0.46	0.02	0.34	0.77	0.00		0.19			0.03	
Uniform Delay, d1	31.0	11.0	8.7	28.2	11.7	6.8		25.2			24.7	
Progression Factor	1.00	1.00	1.00	1.00	1.00	1.00		1.00			1.00	
Incremental Delay, d2	5.2	0.2	0.0	1.7	2.2	0.0		0.5			0.1	
Delay (s)	36.3	11.2	8.7	29.8	13.8	6.8		25.7			24.7	
Level of Service	D	B	A	C	B	A		C			C	
Approach Delay (s)		11.3			14.3			25.7			24.7	
Approach LOS		B			B			C			C	

Intersection Summary			
HCM Average Control Delay	13.6	HCM Level of Service	B
HCM Volume to Capacity ratio	0.69		
Actuated Cycle Length (s)	63.5	Sum of lost time (s)	21.0
Intersection Capacity Utilization	54.5%	ICU Level of Service	A
Analysis Period (min)	15		

c Critical Lane Group

HCM Signalized Intersection Capacity Analysis
200: Tall Cedars Pkwy & West Spine Road

LCPS (HS 7)
2020 Total Future

Movement	EBL	EBR	NBL	NBT	SBT	SBR
Lane Configurations						
Volume (vph)	117	204	140	744	1204	130
Ideal Flow (vphpl)	1900	1900	1900	1900	1900	1900
Total Lost time (s)	7.0	7.0		7.0	7.0	7.0
Lane Util. Factor	1.00	1.00		0.95	0.95	1.00
Frt	1.00	0.85		1.00	1.00	0.85
Flt Protected	0.95	1.00		0.99	1.00	1.00
Satd. Flow (prot)	1770	1583		3511	3539	1583
Flt Permitted	0.95	1.00		0.54	1.00	1.00
Satd. Flow (perm)	1770	1583		1928	3539	1583
Peak-hour factor, PHF	0.92	0.92	0.92	0.92	0.92	0.92
Adj. Flow (vph)	127	222	152	809	1309	141
RTOR Reduction (vph)	0	83	0	0	0	54
Lane Group Flow (vph)	127	139	0	961	1309	87
Turn Type		Perm	Perm			Perm
Protected Phases	4			2	6	
Permitted Phases		4	2			6
Actuated Green, G (s)	11.0	11.0		40.6	40.6	40.6
Effective Green, g (s)	11.0	11.0		40.6	40.6	40.6
Actuated g/C Ratio	0.17	0.17		0.62	0.62	0.62
Clearance Time (s)	7.0	7.0		7.0	7.0	7.0
Vehicle Extension (s)	3.0	3.0		3.0	3.0	3.0
Lane Grp Cap (vph)	297	265		1193	2190	980
v/s Ratio Prot	0.07				0.37	
v/s Ratio Perm		c0.09		c0.50		0.06
v/c Ratio	0.43	0.52		0.81	0.60	0.09
Uniform Delay, d1	24.5	24.9		9.5	7.6	5.0
Progression Factor	1.00	1.00		1.00	1.00	1.00
Incremental Delay, d2	1.0	1.9		4.1	0.4	0.0
Delay (s)	25.5	26.8		13.6	8.0	5.1
Level of Service	C	C		B	A	A
Approach Delay (s)	26.3			13.6	7.7	
Approach LOS	C			B	A	

Intersection Summary			
HCM Average Control Delay	12.1	HCM Level of Service	B
HCM Volume to Capacity ratio	0.75		
Actuated Cycle Length (s)	65.6	Sum of lost time (s)	14.0
Intersection Capacity Utilization	81.9%	ICU Level of Service	D
Analysis Period (min)	15		

c Critical Lane Group

Movement	EBL	EBT	EBR	WBL	WBT	WBR	NBL	NBT	NBR	SBL	SBT	SBR
Lane Configurations												
Volume (vph)	255	373	80	99	568	320	93	339	56	347	499	321
Ideal Flow (vphpl)	1900	1900	1900	1900	1900	1900	1900	1900	1900	1900	1900	1900
Total Lost time (s)	7.0	7.0	7.0	7.0	7.0	7.0	7.0	7.0	7.0	7.0	7.0	7.0
Lane Util. Factor	0.97	0.95	1.00	1.00	0.95	1.00	1.00	0.95	1.00	1.00	0.95	1.00
Frt	1.00	1.00	0.85	1.00	1.00	0.85	1.00	1.00	0.85	1.00	1.00	0.85
Flt Protected	0.95	1.00	1.00	0.95	1.00	1.00	0.95	1.00	1.00	0.95	1.00	1.00
Satd. Flow (prot)	3433	3539	1583	1770	3539	1583	1770	3539	1583	1770	3539	1583
Flt Permitted	0.95	1.00	1.00	0.51	1.00	1.00	0.45	1.00	1.00	0.30	1.00	1.00
Satd. Flow (perm)	3433	3539	1583	957	3539	1583	838	3539	1583	554	3539	1583
Peak-hour factor, PHF	0.92	0.92	0.92	0.92	0.92	0.92	0.92	0.92	0.92	0.92	0.92	0.92
Adj. Flow (vph)	277	405	87	108	617	348	101	368	61	377	542	349
RTOR Reduction (vph)	0	0	58	0	0	43	0	0	46	0	0	90
Lane Group Flow (vph)	277	405	29	108	617	305	101	368	15	377	542	259
Turn Type	Prot		pm+ov	pm+pt		pm+ov	pm+pt		pm+ov	pm+pt		pm+ov
Protected Phases	7	4	5	3	8	1	5	2	3	1	6	7
Permitted Phases			4	8		8	2		2	6		6
Actuated Green, G (s)	13.1	24.6	32.8	30.1	20.8	40.5	23.5	15.3	24.6	42.0	26.8	39.9
Effective Green, g (s)	13.1	24.6	32.8	30.1	20.8	40.5	23.5	15.3	24.6	42.0	26.8	39.9
Actuated g/C Ratio	0.14	0.25	0.34	0.31	0.21	0.42	0.24	0.16	0.25	0.43	0.28	0.41
Clearance Time (s)	7.0	7.0	7.0	7.0	7.0	7.0	7.0	7.0	7.0	7.0	7.0	7.0
Vehicle Extension (s)	3.0	3.0	3.0	3.0	3.0	3.0	3.0	3.0	3.0	3.0	3.0	3.0
Lane Grp Cap (vph)	464	898	650	375	760	776	282	559	516	487	979	766
v/s Ratio Prot	c0.08	c0.11	0.00	0.03	c0.17	0.08	0.03	0.10	0.00	c0.16	0.15	0.05
v/s Ratio Perm			0.01	0.06		0.11	0.06		0.01	c0.18		0.12
v/c Ratio	0.60	0.45	0.05	0.29	0.81	0.39	0.36	0.66	0.03	0.77	0.55	0.34
Uniform Delay, d1	39.4	30.5	21.5	24.5	36.2	19.6	29.5	38.3	27.2	20.6	29.9	19.5
Progression Factor	1.00	1.00	1.00	1.00	1.00	1.00	1.00	1.00	1.00	1.00	1.00	1.00
Incremental Delay, d2	2.1	0.4	0.0	0.4	6.6	0.3	0.8	2.8	0.0	7.5	0.7	0.3
Delay (s)	41.5	30.8	21.6	24.9	42.8	20.0	30.3	41.1	27.2	28.1	30.6	19.7
Level of Service	D	C	C	C	D	B	C	D	C	C	C	B
Approach Delay (s)		33.6			33.6			37.5			26.9	
Approach LOS		C			C			D			C	

Intersection Summary			
HCM Average Control Delay	31.8	HCM Level of Service	C
HCM Volume to Capacity ratio	0.80		
Actuated Cycle Length (s)	96.9	Sum of lost time (s)	28.0
Intersection Capacity Utilization	74.9%	ICU Level of Service	D
Analysis Period (min)	15		
c Critical Lane Group			

Movement	EBL	EBR	NBL	NBT	SBT	SBR
Lane Configurations						
Sign Control	Stop			Stop	Stop	
Volume (vph)	2	28	29	77	117	1
Peak Hour Factor	0.92	0.92	0.92	0.92	0.92	0.92
Hourly flow rate (vph)	2	30	32	84	127	1

Direction, Lane #	EB 1	EB 2	NB 1	NB 2	SB 1	SB 2
Volume Total (vph)	2	30	32	84	127	1
Volume Left (vph)	2	0	32	0	0	0
Volume Right (vph)	0	30	0	0	0	1
Hadj (s)	2.20	1.00	2.20	0.03	0.03	1.00
Departure Headway (s)	7.3	6.1	6.9	4.7	4.7	5.7
Degree Utilization, x	0.00	0.05	0.06	0.11	0.17	0.00
Capacity (veh/h)	471	564	512	745	742	617
Control Delay (s)	9.1	8.2	9.1	7.1	7.5	7.5
Approach Delay (s)	8.3		7.7		7.5	
Approach LOS	A		A		A	

Intersection Summary			
Delay	7.7		
HCM Level of Service	A		
Intersection Capacity Utilization	18.3%	ICU Level of Service	A
Analysis Period (min)	15		

Movement	EBL	EBR	NBL	NBT	SBT	SBR
Lane Configurations						
Sign Control	Stop			Stop	Stop	
Volume (vph)	35	178	123	71	120	25
Peak Hour Factor	0.92	0.92	0.92	0.92	0.92	0.92
Hourly flow rate (vph)	38	193	134	77	130	27

Direction, Lane #	EB 1	EB 2	NB 1	NB 2	SB 1	SB 2
Volume Total (vph)	38	193	134	77	130	27
Volume Left (vph)	38	0	134	0	0	0
Volume Right (vph)	0	193	0	0	0	27
Hadj (s)	0.53	-0.67	0.53	0.17	0.44	-0.67
Departure Headway (s)	6.0	4.8	5.8	5.4	5.8	4.7
Degree Utilization, x	0.06	0.26	0.22	0.12	0.21	0.04
Capacity (veh/h)	566	709	595	631	593	727
Control Delay (s)	8.2	8.2	9.2	8.0	9.1	6.6
Approach Delay (s)	8.2		8.8		8.7	
Approach LOS	A		A		A	

Intersection Summary			
Delay	8.5		
HCM Level of Service	A		
Intersection Capacity Utilization	24.0%	ICU Level of Service	A
Analysis Period (min)	15		

Movement	EBL	EBT	EBR	WBL	WBT	WBR	NBL	NBT	NBR	SBL	SBT	SBR
Lane Configurations												
Volume (vph)	115	316	64	163	467	85	69	35	90	97	49	132
Ideal Flow (vphpl)	1900	1900	1900	1900	1900	1900	1900	1900	1900	1900	1900	1900
Total Lost time (s)	7.0	7.0	7.0	7.0	7.0	7.0	7.0	7.0	7.0	7.0	7.0	7.0
Lane Util. Factor	1.00	1.00	1.00	1.00	1.00	1.00	1.00	1.00	1.00	1.00	1.00	1.00
Frt	1.00	1.00	0.85	1.00	1.00	0.85	1.00	1.00	0.85	1.00	1.00	0.85
Flt Protected	0.95	1.00	1.00	0.95	1.00	1.00	0.95	1.00	1.00	0.95	1.00	1.00
Satd. Flow (prot)	1480	1863	1583	1770	1863	1509	1770	1863	1583	1770	1863	1538
Flt Permitted	0.27	1.00	1.00	0.36	1.00	1.00	0.72	1.00	1.00	0.47	1.00	1.00
Satd. Flow (perm)	425	1863	1583	663	1863	1509	1346	1863	1583	873	1863	1538
Peak-hour factor, PHF	0.92	0.92	0.92	0.92	0.92	0.92	0.92	0.92	0.92	0.92	0.92	0.92
Adj. Flow (vph)	125	343	70	177	508	92	75	38	98	105	53	143
RTOR Reduction (vph)	0	0	45	0	0	50	0	0	76	0	0	108
Lane Group Flow (vph)	125	343	25	177	508	42	75	38	22	105	53	35
Heavy Vehicles (%)	22%	2%	2%	2%	2%	7%	2%	2%	2%	2%	2%	5%
Turn Type	pm+pt		pm+ov	pm+pt		pm+ov	pm+pt		pm+ov	pm+pt		pm+ov
Protected Phases	5	2	3	1	6	7	3	8	1	7	4	5
Permitted Phases	2		2	6		6	8		8	4		4
Actuated Green, G (s)	28.0	22.9	27.5	35.0	26.4	36.0	13.5	8.9	17.5	23.5	13.9	19.0
Effective Green, g (s)	28.0	22.9	27.5	35.0	26.4	36.0	13.5	8.9	17.5	23.5	13.9	19.0
Actuated g/C Ratio	0.36	0.29	0.35	0.45	0.34	0.46	0.17	0.11	0.22	0.30	0.18	0.24
Clearance Time (s)	7.0	7.0	7.0	7.0	7.0	7.0	7.0	7.0	7.0	7.0	7.0	7.0
Vehicle Extension (s)	3.0	3.0	3.0	3.0	3.0	3.0	3.0	3.0	3.0	3.0	3.0	3.0
Lane Grp Cap (vph)	222	547	700	420	631	832	258	213	497	373	332	513
v/s Ratio Prot	0.04	0.18	0.00	c0.05	c0.27	0.01	0.02	0.02	0.00	c0.03	0.03	0.00
v/s Ratio Perm	0.17		0.01	0.14		0.02	0.03		0.01	c0.05		0.02
v/c Ratio	0.56	0.63	0.04	0.42	0.81	0.05	0.29	0.18	0.04	0.28	0.16	0.07
Uniform Delay, d1	18.2	23.9	16.6	13.9	23.5	11.6	27.8	31.2	23.7	20.4	27.1	22.7
Progression Factor	1.00	1.00	1.00	1.00	1.00	1.00	1.00	1.00	1.00	1.00	1.00	1.00
Incremental Delay, d2	3.2	2.2	0.0	0.7	7.4	0.0	0.6	0.4	0.0	0.4	0.2	0.1
Delay (s)	21.5	26.1	16.6	14.5	30.8	11.6	28.5	31.6	23.7	20.8	27.3	22.7
Level of Service	C	C	B	B	C	B	C	C	C	C	C	C
Approach Delay (s)		23.8			24.9			26.8			22.9	
Approach LOS		C			C			C			C	

Intersection Summary			
HCM Average Control Delay	24.4	HCM Level of Service	C
HCM Volume to Capacity ratio	0.62		
Actuated Cycle Length (s)	78.0	Sum of lost time (s)	28.0
Intersection Capacity Utilization	60.5%	ICU Level of Service	B
Analysis Period (min)	15		

c Critical Lane Group

APPENDIX 0

RIGHT TURN LANE WARRANTS

Guidelines for Right Turn Treatments
Two-Lane Highways

Project Number:	2110-013 LCPS HS-7
Intersection:	Braddock Road and Relocated Rt. 659
Movement:	WBR from Braddock onto Rel. Rt. 659
Analyst:	AG

	Condition	PHV Approach Total	PHV Right Turns	Taper Threshold	Full Lane Threshold	Treatment
1	2012 TF HS AM-MF	395	224	31	67	Full-width Lane and Taper Required
2	2012 TF HS PM-MF	230	124	47	89	Full-width Lane and Taper Required
3	2012 TF HS AM-PF	539	368	20	48	Full-width Lane and Taper Required
4	2012 TF HS PM-PF	279	173	42	83	Full-width Lane and Taper Required
5						
6						

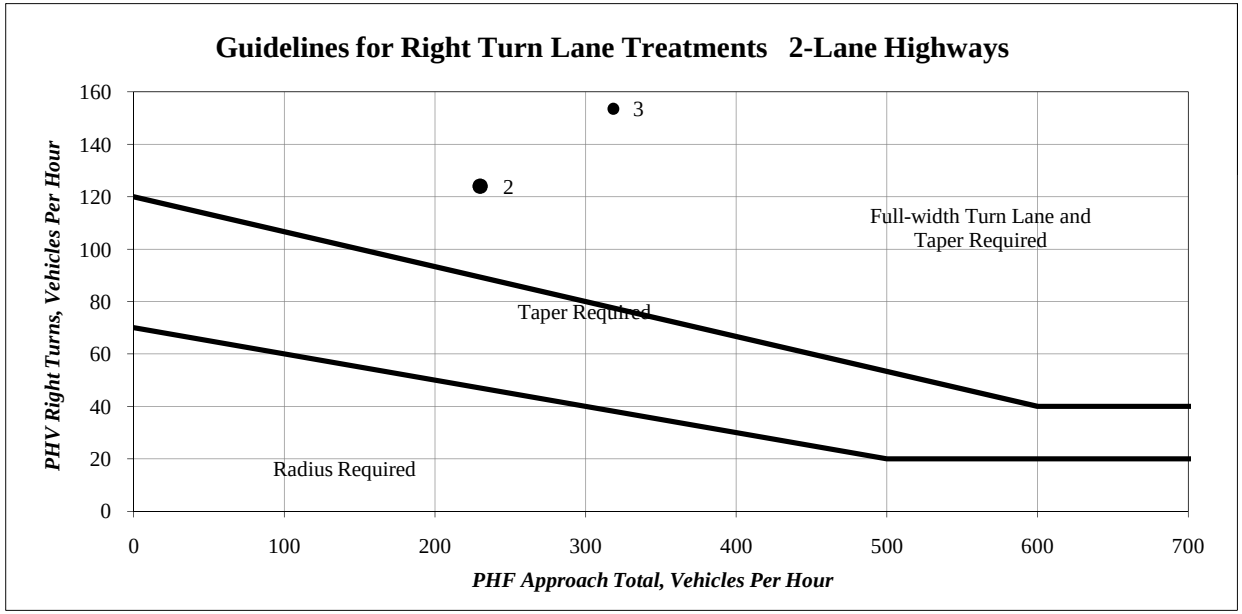

Guidelines for Right Turn Treatments
Two-Lane Highways

Project Number:	2110-013 LCPS HS-7
Intersection:	Site Drive,Road B and Relocated Rt. 659
Movement:	SBR from Rel. Rt. 659 onto Site Drive, Road B
Analyst:	AG

	Condition	PHV Approach Total	PHV Right Turns	Taper Threshold	Full Lane Threshold	Treatment
1	2012 TF HS AM-MF	149	133	55	100	Full-width Lane and Taper Required
2	2012 TF HS PM-MF	64	45	64	111	Radius Required
3	2012 TF HS AM-PF	71	49	63	111	Radius Required
4	2012 TF HS PM-PF	44	16	66	114	Radius Required
5						
6						

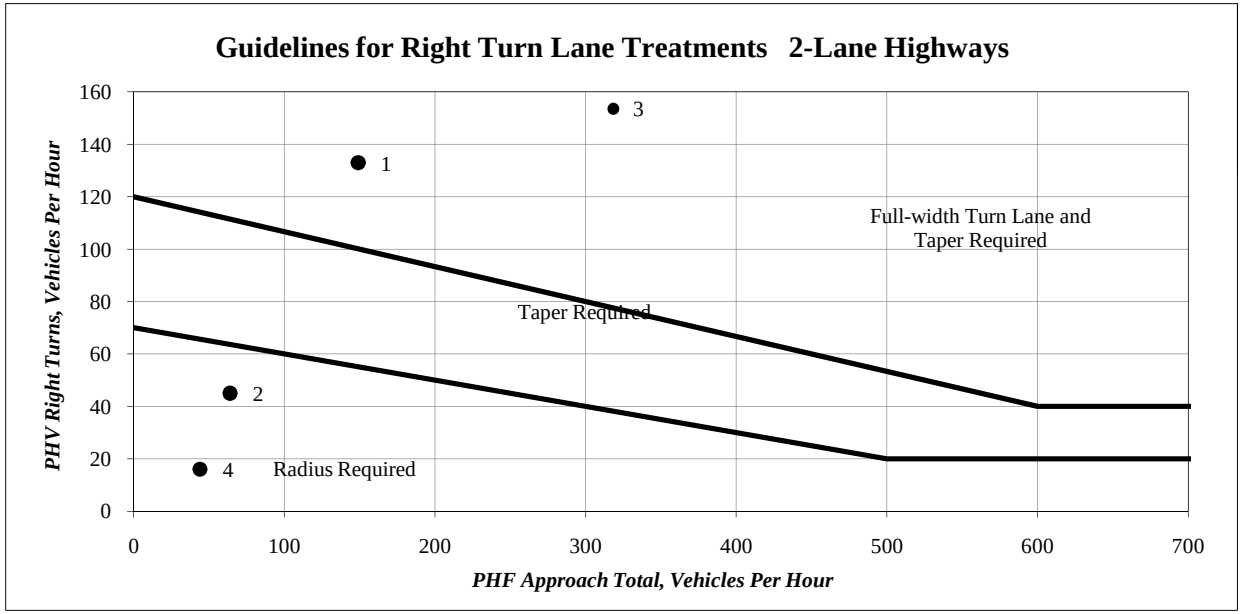

Guidelines for Right Turn Treatments
Two-Lane Highways

Project Number:	2110-013 LCPS HS-7
Intersection:	Site Drive,Road A and Relocated Rt. 659
Movement:	SBR from Rel. Rt. 659 onto Site Drive, Road A
Analyst:	AG

	Condition	PHV Approach Total	PHV Right Turns	Taper Threshold	Full Lane Threshold	Treatment
1	2012 TF HS AM-MF	157	21	54	99	Radius Required
2	2012 TF HS PM-MF	53	7	65	113	Radius Required
3	2012 TF HS AM-PF	61	9	64	112	Radius Required
4	2012 TF HS PM-PF	20	3	68	117	Radius Required
5						
6						

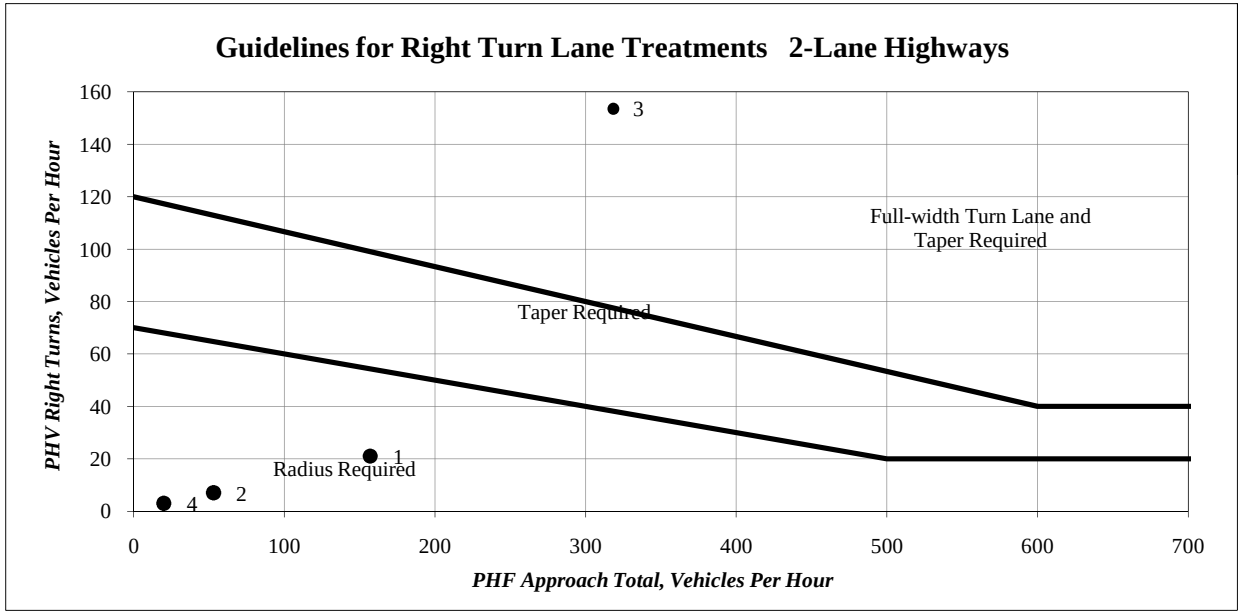

Guidelines for Right Turn Treatments
Two-Lane Highways

Project Number:	2110-013 LCPS HS-7
Intersection:	Site Drive,Road B and Relocated Rt. 659
Movement:	EBR from Site Drive, Road B onto Rel. Rt. 659
Analyst:	AG

	Condition	PHV Approach Total	PHV Right Turns	Taper Threshold	Full Lane Threshold	Treatment
1	2012 TF HS AM-MF	175	113	53	97	Full-width Lane and Taper Required
2	2012 TF HS PM-MF	253	163	45	86	Full-width Lane and Taper Required
3	2012 TF HS AM-PF	190	167	51	95	Full-width Lane and Taper Required
4	2012 TF HS PM-PF	275	242	43	83	Full-width Lane and Taper Required
5						
6						

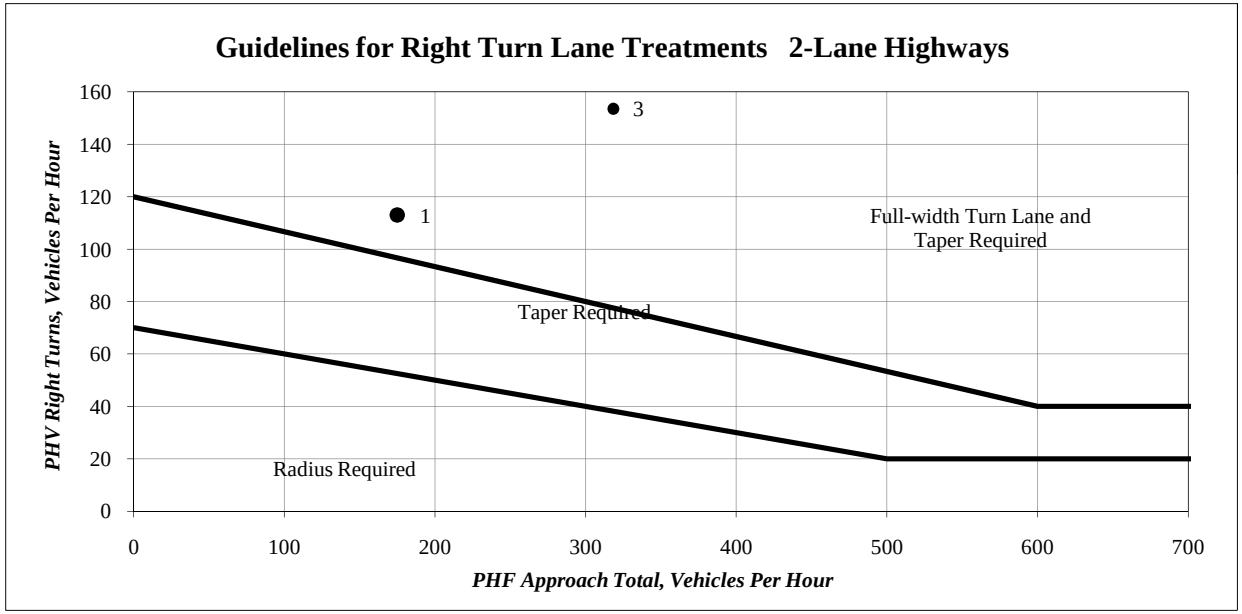

Guidelines for Right Turn Treatments
Two-Lane Highways

Project Number:	2110-013 LCPS HS-7
Intersection:	Site Drive,Road B and Relocated Rt. 659
Movement:	EBR from Site Drive, Road B onto Rel. Rt. 659
Analyst:	AG

	Condition	PHV Approach Total	PHV Right Turns	Taper Threshold	Full Lane Threshold	Treatment
1	2012 TF HS AM-MF	23	13	68	117	Radius Required
2	2012 TF HS PM-MF	32	18	67	116	Radius Required
3	2012 TF HS AM-PF	23	19	68	117	Radius Required
4	2012 TF HS PM-PF	33	27	67	116	Radius Required
5						
6						

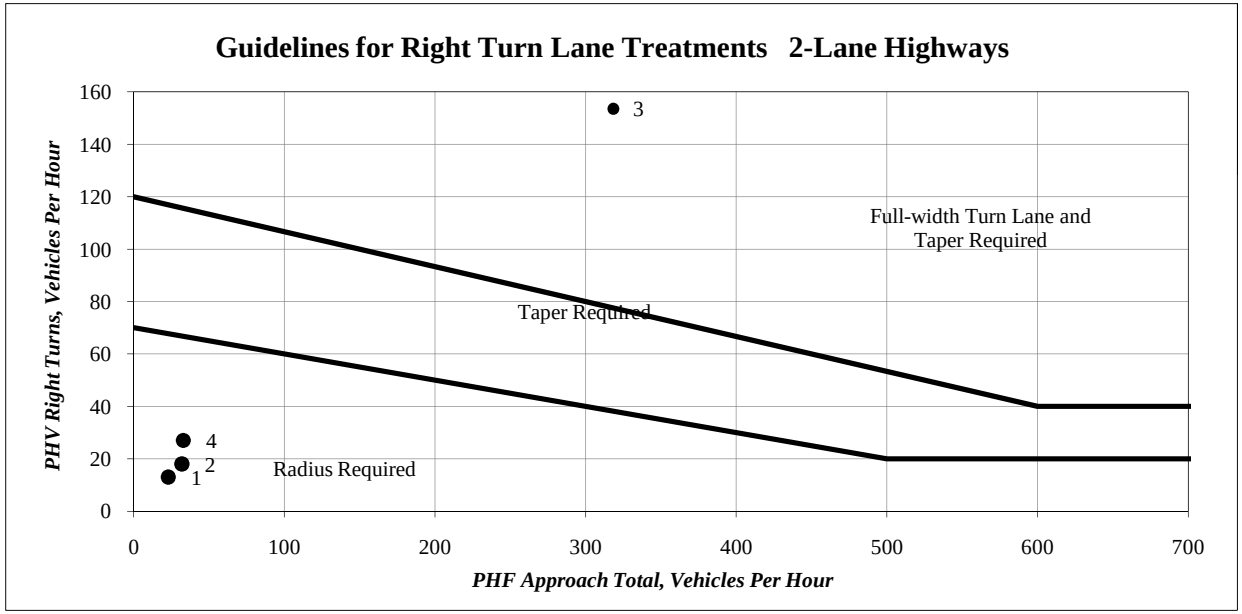

Guidelines for Right Turn Treatments
Two-Lane Highways

Project Number:	2110-013 LCPS HS-7
Intersection:	Site Drive,Road B and Relocated Rt. 659
Movement:	SBR from Rel. Rt. 659 onto Site Drive, Road B
Analyst:	AG

	Condition	PHV Approach Total	PHV Right Turns	Taper Threshold	Full Lane Threshold	Treatment
1	2015 TF HS AM-PF	80	49	62	109	Radius Required
2	2015 TF HS PM-PF	53	23	65	113	Radius Required
3						
4						
5						
6						

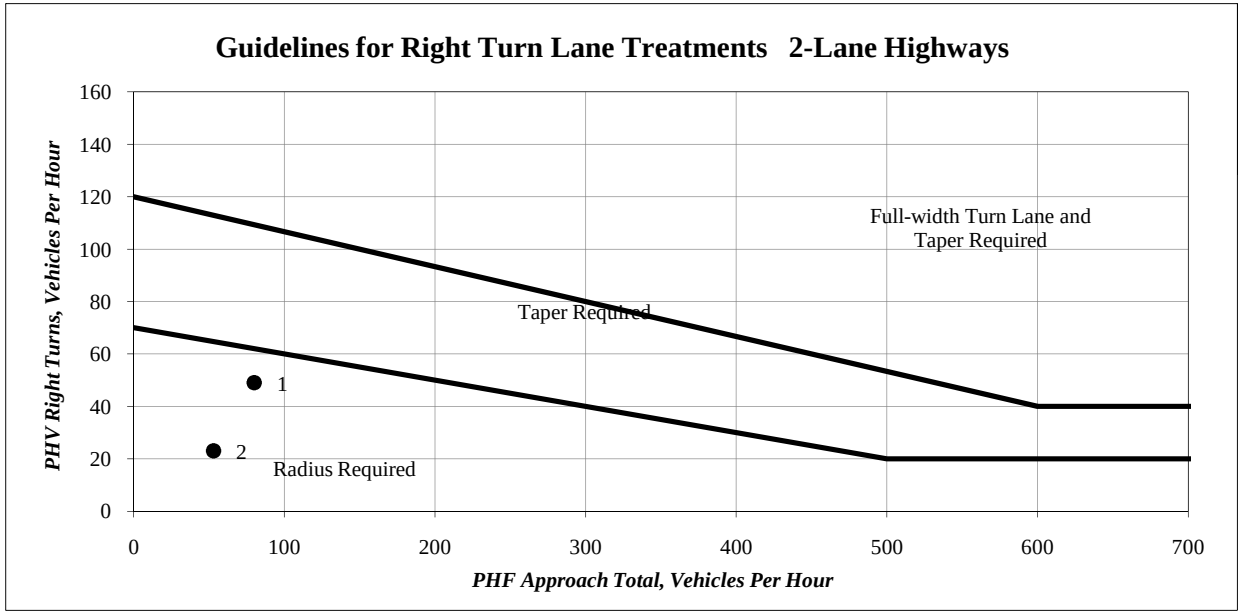

Guidelines for Right Turn Treatments
Two-Lane Highways

Project Number:	2110-013 LCPS HS-7
Intersection:	Site Drive,Road B and Relocated Rt. 659
Movement:	EBR from Site Drive, Road B onto Rel. Rt. 659
Analyst:	AG

	Condition	PHV Approach Total	PHV Right Turns	Taper Threshold	Full Lane Threshold	Treatment
1	2015 TF HS AM-MF	23	13	68	117	Radius Required
2	2015 TF HS PM-MF	32	18	67	116	Radius Required
3						
4	2015 TF HS PM-PF	33	27	67	116	Radius Required
5	2015 TF HS AM-PF	23	19	68	117	Radius Required
6						

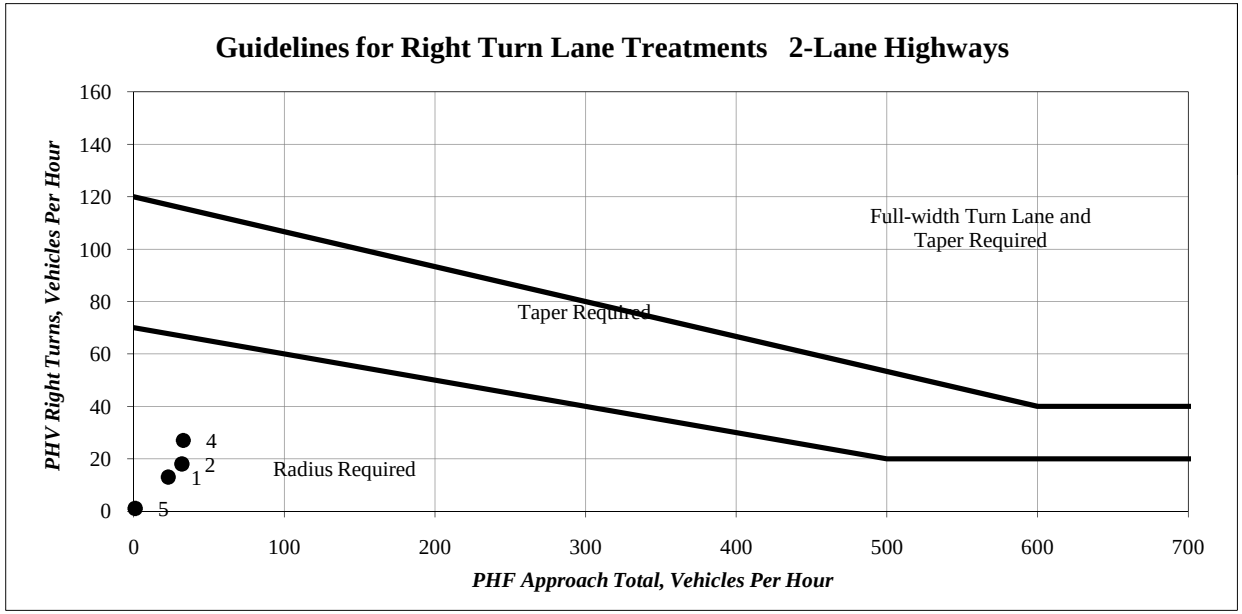

APPENDIX P

LEFT TURN LANE WARRANTS

Guidelines for Left Turn Treatments
Two-Lane Highways
Based on AASHTO / VDOT Road Design Manual Guidelines

Project Number:	2110-013 LCPS HS-7
Intersection:	Braddock Road and Relocated Rt. 659
Movement:	SBL from Rel. Rt. 659 onto Braddock
Analyst:	AG

	Condition	Opposing Volume (VPH)	Advancing Volume (VPH)	20%	30%	40%
1	2012 TF HS AM-MF	461	220	Turn Lane Unwarranted in AM	Turn Lane Unwarranted in AM	Turn Lane Warranted in AM
2	2012 TF HS PM-MF	243	238	Turn Lane Unwarranted in PM	Turn Lane Unwarranted in PM	Turn Lane Unwarranted in PM

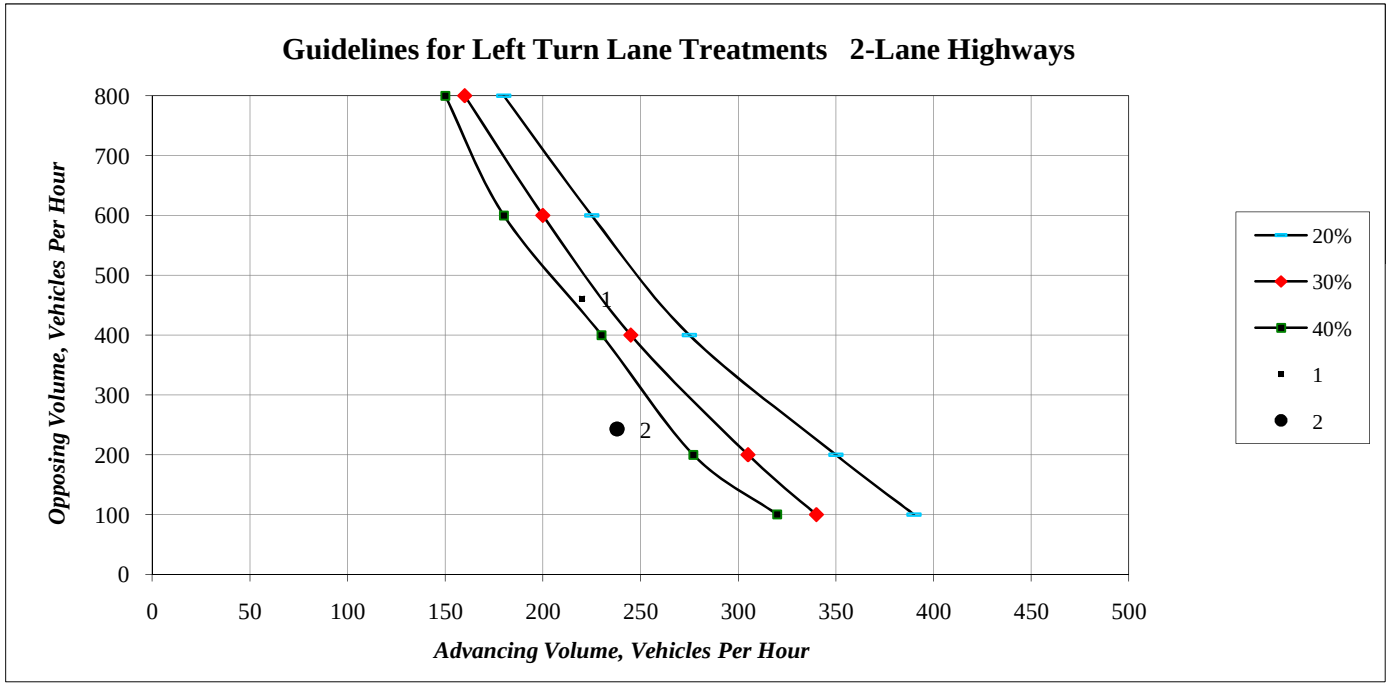

Guidelines for Left Turn Treatments
Two-Lane Highways
Based on AASHTO / VDOT Road Design Manual Guidelines

Project Number:	2110-013 LCPS HS-7
Intersection:	Braddock Road and Relocated Rt. 659
Movement:	SBL from Rel. Rt. 659 onto Braddock
Analyst:	AG

	Condition	Opposing Volume (VPH)	Advancing Volume (VPH)	20%	30%	40%
1	2012 TF HS AM-PF	445	281	Turn Lane Warranted in AM	Turn Lane Warranted in AM	Turn Lane Warranted in AM
2	2012 TF HS PM-PF	238	324	Turn Lane Unwarranted in PM	Turn Lane Warranted in PM	Turn Lane Warranted in PM

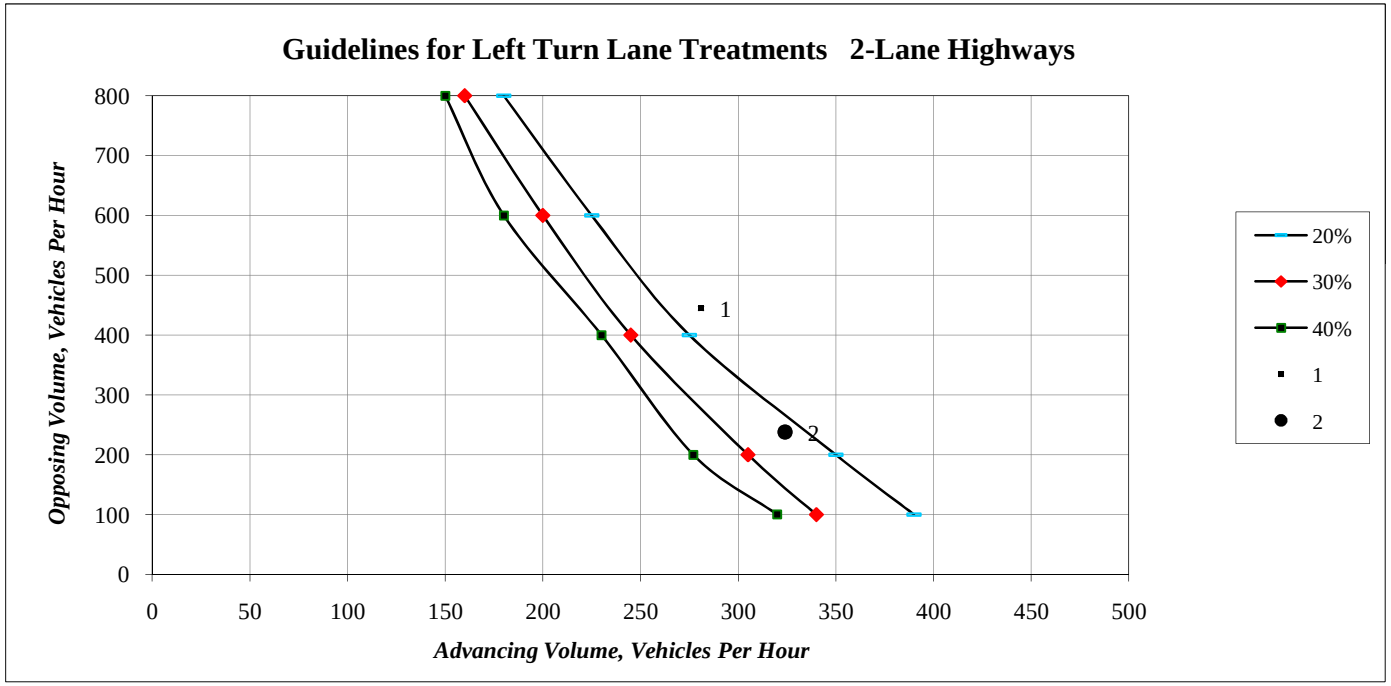

Guidelines for Left Turn Treatments
Two-Lane Highways
Based on AASHTO / VDOT Road Design Manual Guidelines

Project Number:	2110-013 LCPS HS-7
Intersection:	Site Drive, Road B and Relocated Rt. 659
Movement:	NBL from Rel. Rt. 659 onto Site Drive, Road B
Analyst:	AG

	Condition	Opposing Volume (VPH)	Advancing Volume (VPH)	20%	30%	40%
1	2012 TF HS AM-MF	149	271	Turn Lane Unwarranted in AM	Turn Lane Unwarranted in AM	Turn Lane Unwarranted in AM
2	2012 TF HS PM-MF	64	92	Turn Lane Unwarranted in PM	Turn Lane Unwarranted in PM	Turn Lane Unwarranted in PM

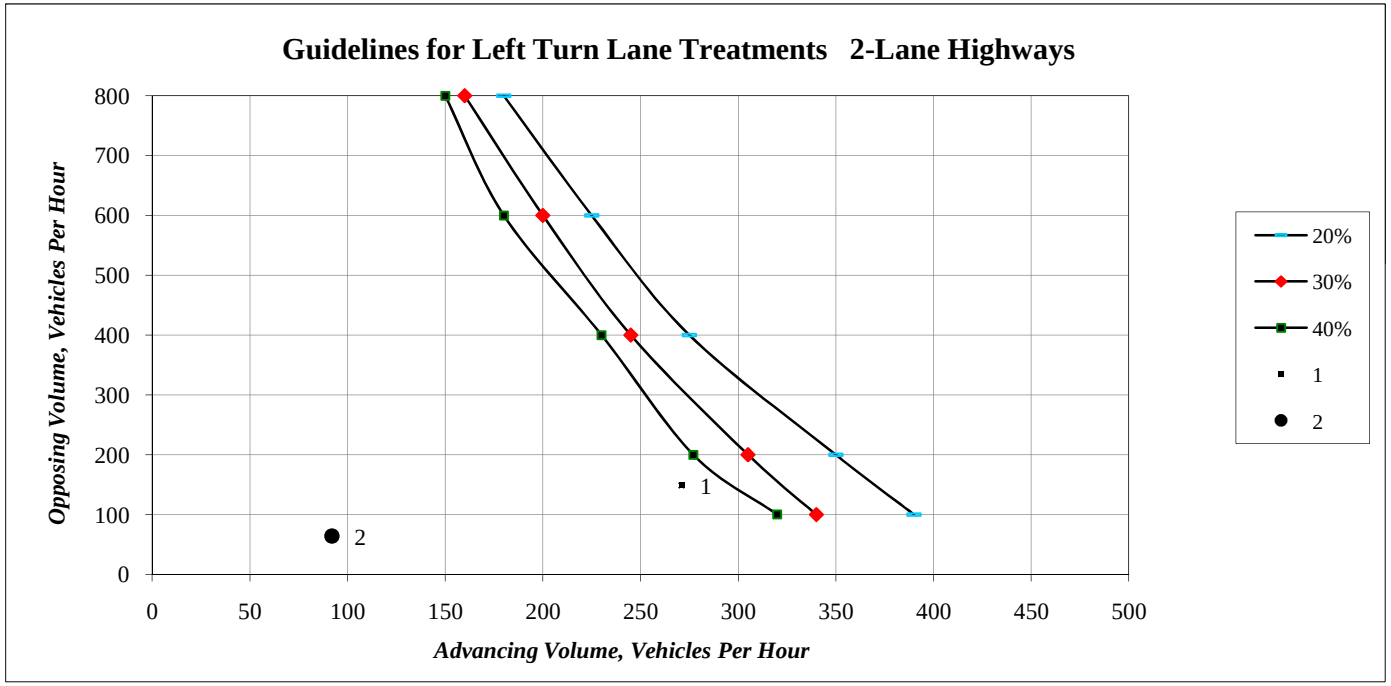

Guidelines for Left Turn Treatments
Two-Lane Highways
Based on AASHTO / VDOT Road Design Manual Guidelines

Project Number:	2110-013 LCPS HS-7
Intersection:	Site Drive, Road B and Relocated Rt. 659
Movement:	NBL from Rel. Rt. 659 onto Site Drive, Road B
Analyst:	AG

	Condition	Opposing Volume (VPH)	Advancing Volume (VPH)	20%	30%	40%
1	2012 TF HS AM-PF	71	400	Turn Lane Unwarranted in AM	Turn Lane Warranted in AM	Turn Lane Warranted in AM
2	2012 TF HS PM-PF	44	135	Turn Lane Unwarranted in PM	Turn Lane Unwarranted in PM	Turn Lane Unwarranted in PM

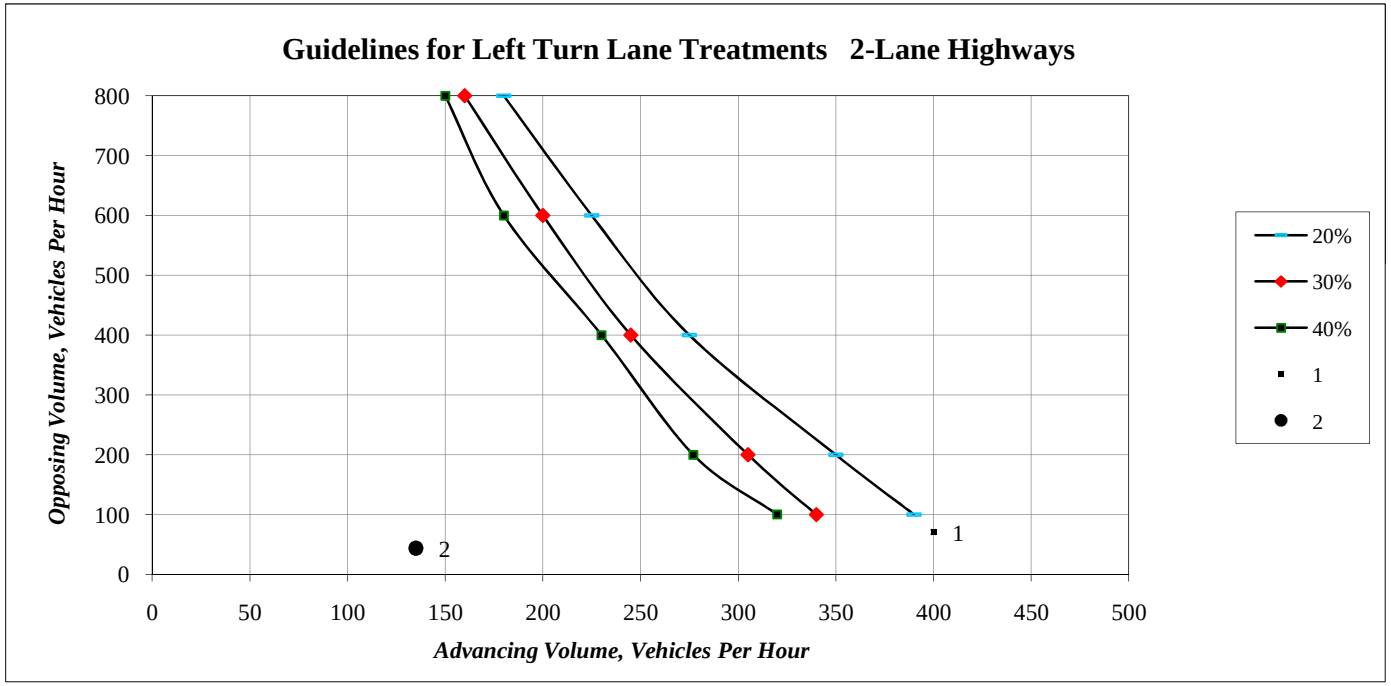

Guidelines for Left Turn Treatments
Two-Lane Highways
Based on AASHTO / VDOT Road Design Manual Guidelines

Project Number: 2110-013 LCPS HS-7
Intersection: Site Drive, Road B and Relocated Rt. 659
Movement: NBL from Rel. Rt. 659 onto Site Drive, Road A
Analyst: AG

	Condition	Opposing Volume (VPH)	Advancing Volume (VPH)	20%	30%	40%
1	2012 TF HS AM-MF	157	92	Turn Lane Unwarranted in AM	Turn Lane Unwarranted in AM	Turn Lane Unwarranted in AM
2						

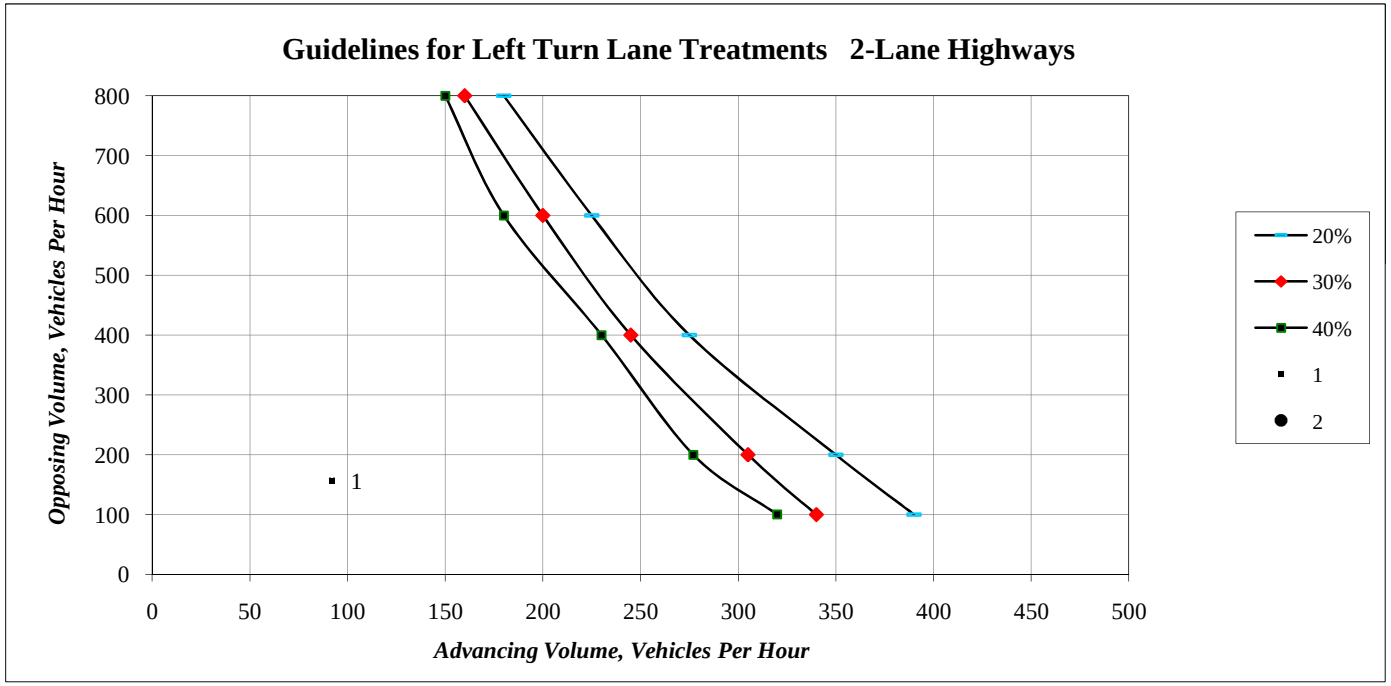

Guidelines for Left Turn Treatments
Two-Lane Highways
Based on AASHTO / VDOT Road Design Manual Guidelines

Project Number:
Intersection: 2110-013 LCPS HS-7
Movement: Site Drive, Road B and Relocated Rt. 659
Analyst: NBL from Rel. Rt. 659 onto Site Drive, Road A
AG

	Condition	Opposing Volume (VPH)	Advancing Volume (VPH)	5%	10%	15%
1	2012 TF HS PM-MF	53	101	Turn Lane Unwarranted in AM	Turn Lane Unwarranted in AM	Turn Lane Unwarranted in AM
2						

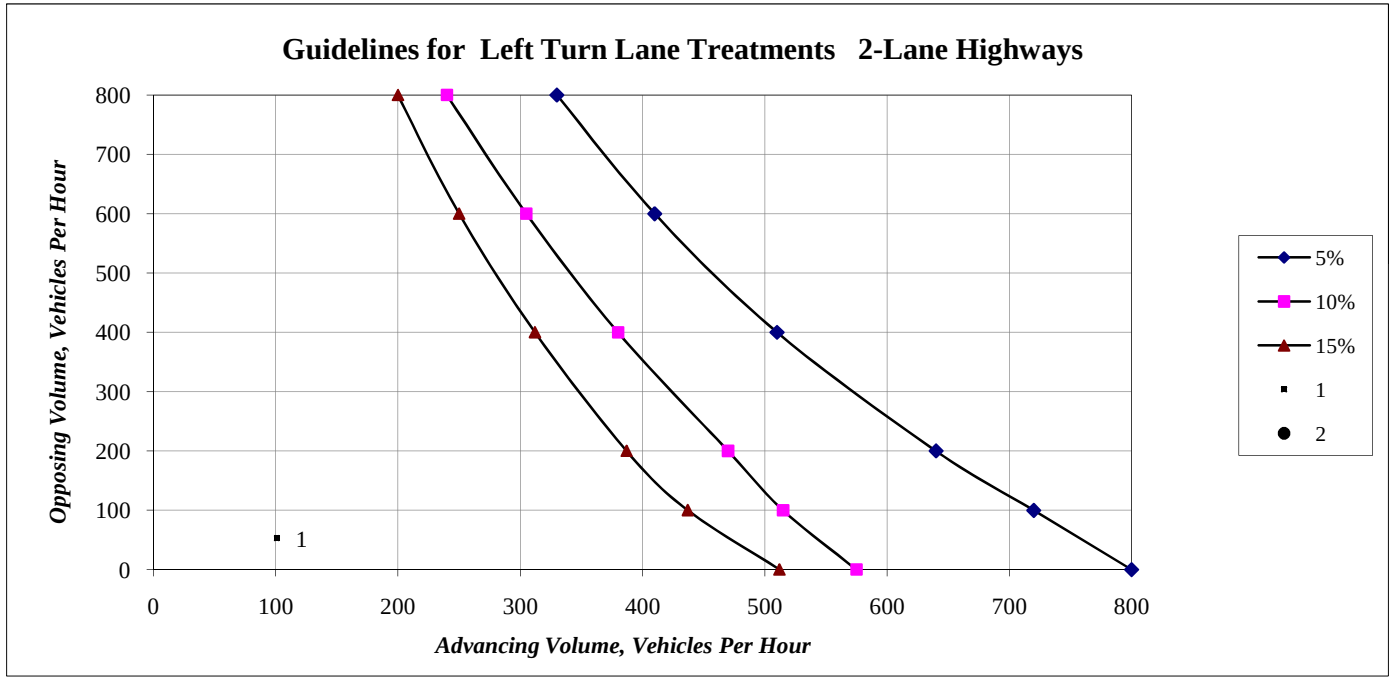

Guidelines for Left Turn Treatments
Two-Lane Highways
Based on AASHTO / VDOT Road Design Manual Guidelines

Project Number:	2110-013 LCPS HS-7
Intersection:	Site Drive, Road B and Relocated Rt. 659
Movement:	NBL from Rel. Rt. 659 onto Site Drive, Road A
Analyst:	AG

	Condition	Opposing Volume (VPH)	Advancing Volume (VPH)	20%	30%	40%
1	2012 TF HS AM-PF	61	66	Turn Lane Unwarranted in AM	Turn Lane Unwarranted in AM	Turn Lane Unwarranted in AM
2	2012 TF HS PM-PF	20	48	Turn Lane Unwarranted in PM	Turn Lane Unwarranted in PM	Turn Lane Unwarranted in PM

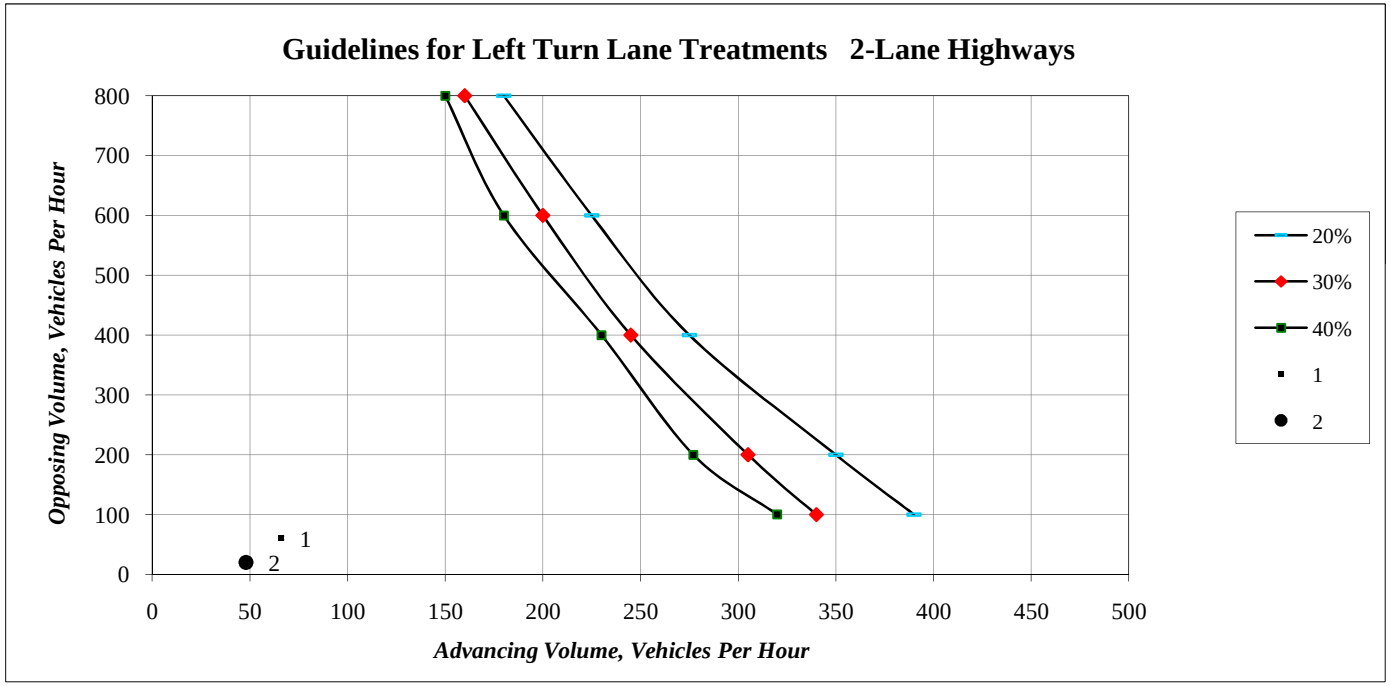

Guidelines for Left Turn Treatments
Two-Lane Highways
Based on AASHTO / VDOT Road Design Manual Guidelines

Project Number:	2110-013 LCPS HS-7
Intersection:	Site Drive, Road B and Relocated Rt. 659
Movement:	NBL from Rel. Rt. 659 onto Site Drive, Road B
Analyst:	AG

	Condition	Opposing Volume (VPH)	Advancing Volume (VPH)	20%	30%	40%
1	2015 TF HS AM-MF	158	280	Turn Lane Unwarranted in AM	Turn Lane Unwarranted in AM	Turn Lane Unwarranted in AM
2	2015 TF HS PM-MF	72	120	Turn Lane Unwarranted in PM	Turn Lane Unwarranted in PM	Turn Lane Unwarranted in PM

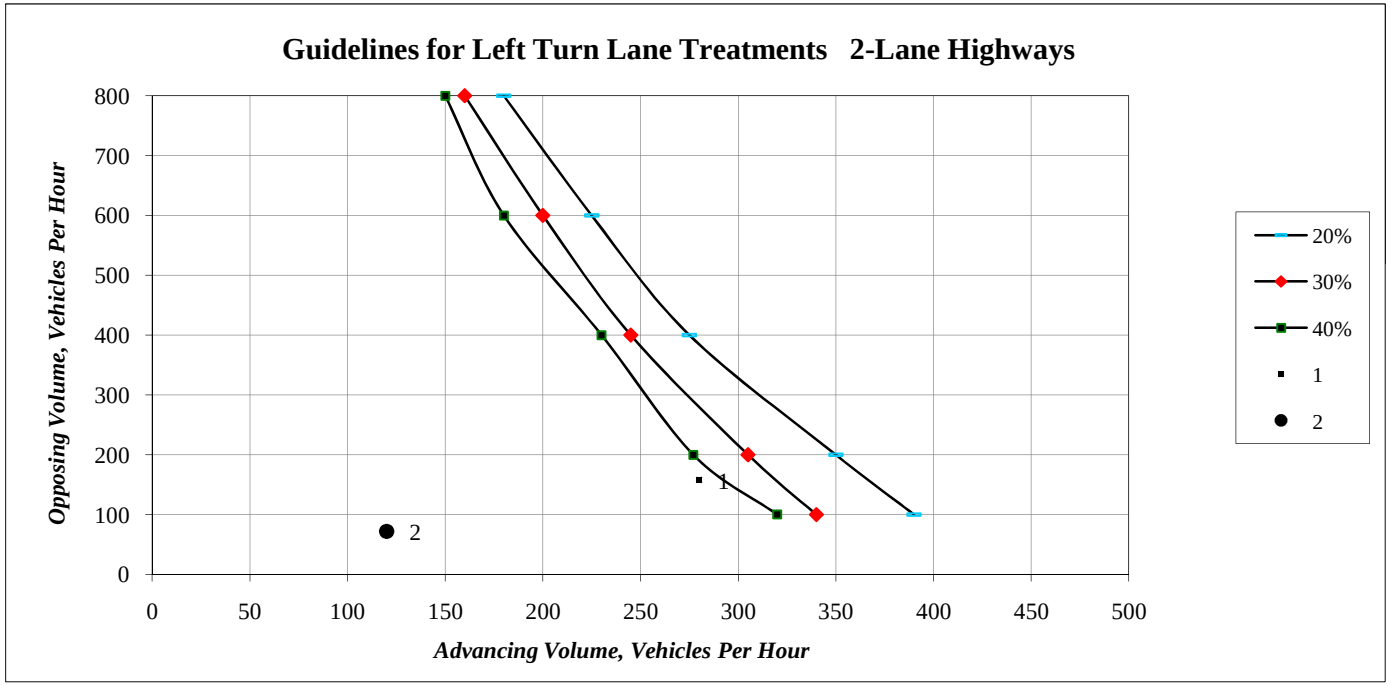

Guidelines for Left Turn Treatments
Two-Lane Highways
Based on AASHTO / VDOT Road Design Manual Guidelines

Project Number:	2110-013 LCPS HS-7
Intersection:	Site Drive, Road B and Relocated Rt. 659
Movement:	NBL from Rel. Rt. 659 onto Site Drive, Road A
Analyst:	AG

	Condition	Opposing Volume (VPH)	Advancing Volume (VPH)	20%	30%	40%
1	2015 TF HS AM-MF	160	95	Turn Lane Unwarranted in AM	Turn Lane Unwarranted in AM	Turn Lane Unwarranted in AM
2						

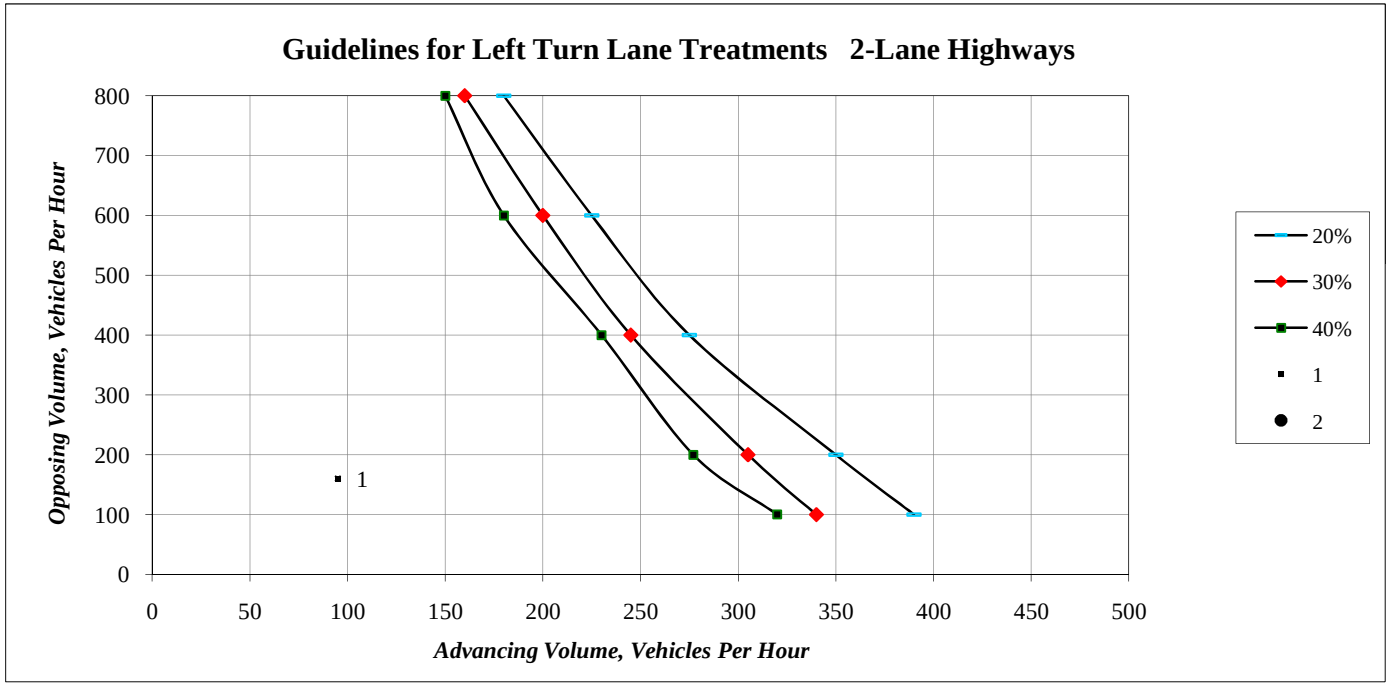

Guidelines for Left Turn Treatments
Two-Lane Highways
Based on AASHTO / VDOT Road Design Manual Guidelines

Project Number:
Intersection: 2110-013 LCPS HS-7
Movement: Site Drive, Road B and Relocated Rt. 659
Analyst: NBL from Rel. Rt. 659 onto Site Drive, Road A
AG

	Condition	Opposing Volume (VPH)	Advancing Volume (VPH)	5%	10%	15%
1	2015 TF HS PM-MF	55	110	Turn Lane Unwarranted in AM	Turn Lane Unwarranted in AM	Turn Lane Unwarranted in AM
2						

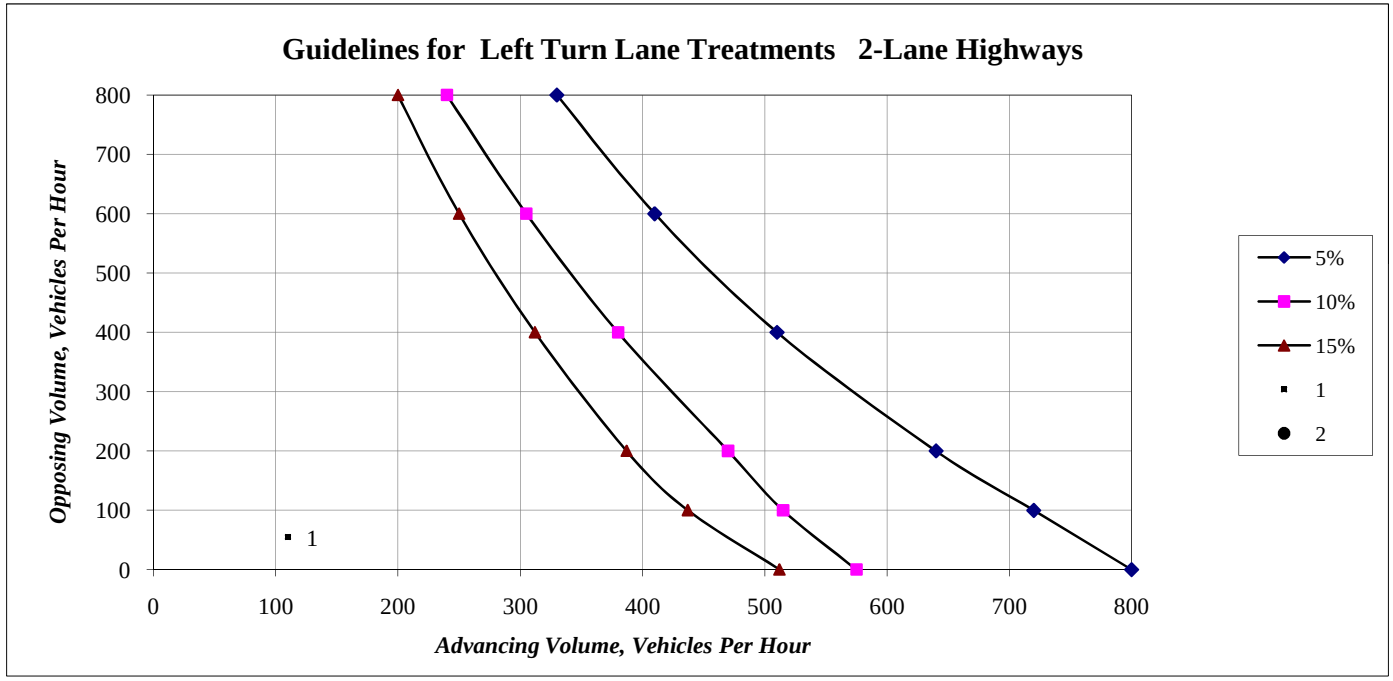

Guidelines for Left Turn Treatments
Two-Lane Highways
Based on AASHTO / VDOT Road Design Manual Guidelines

Project Number:	2110-013 LCPS HS-7
Intersection:	Site Drive, Road B and Relocated Rt. 659
Movement:	NBL from Rel. Rt. 659 onto Site Drive, Road A
Analyst:	AG

	Condition	Opposing Volume (VPH)	Advancing Volume (VPH)	20%	30%	40%
1	2012 TF HS AM-PF	64	69	Turn Lane Unwarranted in AM	Turn Lane Unwarranted in AM	Turn Lane Unwarranted in AM
2	2012 TF HS PM-PF	22	58	Turn Lane Unwarranted in PM	Turn Lane Unwarranted in PM	Turn Lane Unwarranted in PM

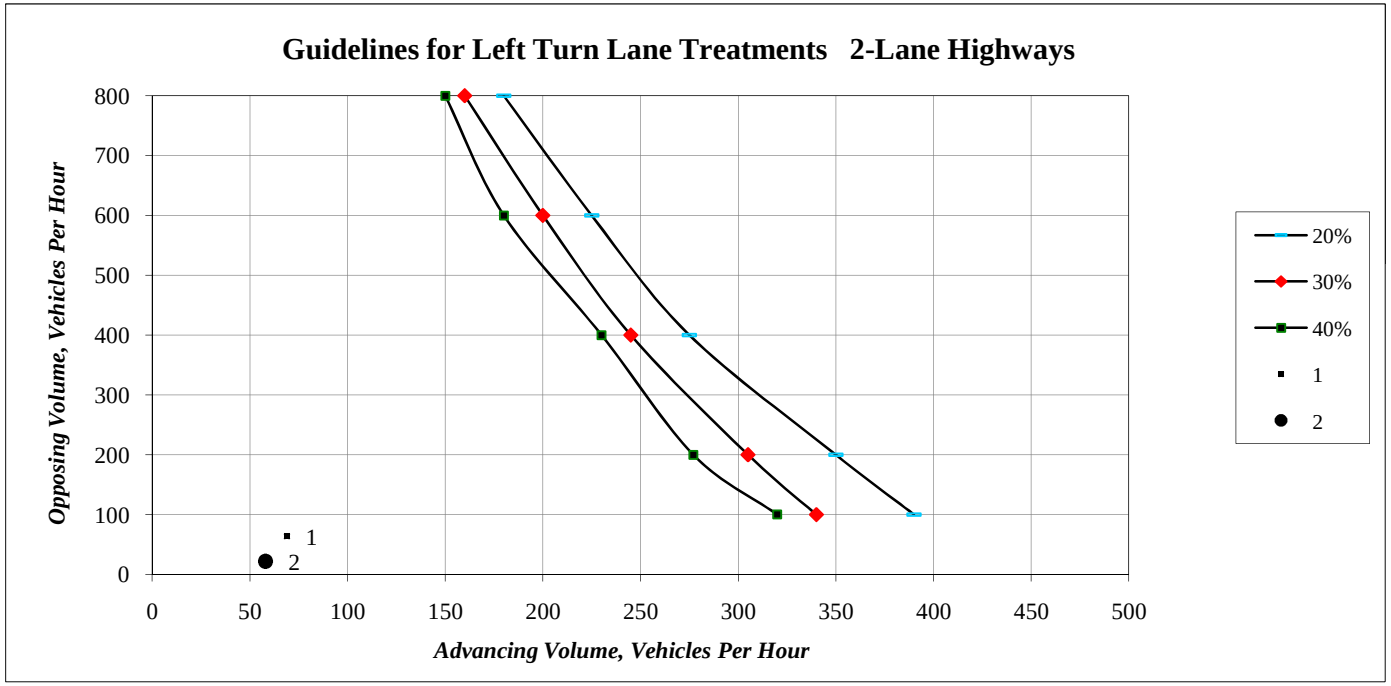

APPENDIX Q

SIGNAL WARRANTS

TRAFFIC SIGNAL WARRANTS North Star Blvd/Road A TF 2012 HS Peak Mixed Feed

(Based on Estimated Average Daily Traffic - See Note 2)

URBAN X **RURAL** _____

1. Minimum Vehicular

Urban **Not Satisfied** Rural

Number of lanes for moving traffic on each approach

Major Street	Minor Street	Urban	Rural	Actual	Urban	Rural	Actual
		Vehicles per day on major Street (total of both approaches)			*Vehicles per day on higher-volume minor street (one direction only)*		
		Minimum Required Estimated Average Daily Traffic					
1	1	8,000	5,600	1,540	2,400	1,680	320
2 or more	1	9,600	6,720	0	2,400	1,680	0
2 or more	2 or more	9,600	6,720	0	3,200	2,240	0
1	2 or more	8,000	5,600	0	3,200	2,240	0

2. Interruption of Continuous Traffic

Urban **Not Satisfied** Rural

Number of lanes for moving traffic on each approach

Major Street	Minor Street	Urban	Rural	Actual	Urban	Rural	Actual
		Vehicles per day on major Street (total of both approaches)			*Vehicles per day on higher-volume minor street (one direction only)*		
1	1	12,000	8,400	1,540	1,200	850	320
2 or more	1	14,400	10,080	0	1,200	850	0
2 or more	2 or more	14,400	10,080	0	1,600	1,120	0
1	2 or more	12,000	8,400	0	1,600	1,120	0

3. Combination

Urban **Not Satisfied** Rural

Must satisfy 80% of Warrants 1 and 2 | *Must satisfy 80% of Warrants 1 and 2*

Note:

1. Left turn movements from the major street may be included with minor street volumes if a separate signal phase is to be provided for the left-turn movement.
2. To be used only for NEW INTERSECTIONS or other locations where actual traffic volumes cannot be counted.

* Form is based on the sample form found in the Manual on Traffic Signal Design (MTSD) page 20.

TRAFFIC SIGNAL WARRANTS North Star Blvd/Road B TF 2012 HS Peak Mixed Feed

(Based on Estimated Average Daily Traffic - See Note 2)

URBAN X **RURAL** _____

1. Minimum Vehicular

Urban **Not Satisfied** Rural

Number of lanes for moving traffic on each approach				Minimum Required Estimated Average Daily Traffic: *Vehicles per day on major Street (total of both approaches)*			*Vehicles per day on higher-volume minor street (one direction only)*		
Major Street		Minor Street		Urban	Rural	Actual	Urban	Rural	Actual
1	.....	1	.....	8,000	5,600	1,560	2,400	1,680	2,530
2 or more	.....	1	.....	9,600	6,720	0	2,400	1,680	0
2 or more	.....	2 or more	.....	9,600	6,720	0	3,200	2,240	0
1	.....	2 or more	.....	8,000	5,600	0	3,200	2,240	0

2. Interruption of Continuous Traffic

Urban **Not Satisfied** Rural

Number of lanes for moving traffic on each approach				*Vehicles per day on major Street (total of both approaches)*			*Vehicles per day on higher-volume minor street (one direction only)*		
Major Street		Minor Street		Urban	Rural	Actual	Urban	Rural	Actual
1	.....	1	.....	12,000	8,400	1,560	1,200	850	2,530
2 or more	.....	1	.....	14,400	10,080	0	1,200	850	0
2 or more	.....	2 or more	.....	14,400	10,080	0	1,600	1,120	0
1	.....	2 or more	.....	12,000	8,400	0	1,600	1,120	0

3. Combination

Urban **Not Satisfied** Rural

Must satisfy 80% of Warrants 1 and 2 | *Must satisfy 80% of Warrants 1 and 2*

Note:

1. Left turn movements from the major street may be included with minor street volumes if a separate signal phase is to be provided for the left-turn movement.
2. To be used only for NEW INTERSECTIONS or other locations where actual traffic volumes cannot be counted.

* Form is based on the sample form found in the Manual on Traffic Signal Design (MTSD) page 20.

TRAFFIC SIGNAL WARRANTS North Star Blvd/Road A TF 2012 HS Peak Pure Feed

(Based on Estimated Average Daily Traffic - See Note 2)

URBAN X **RURAL** _____

1. Minimum Vehicular

Urban **Not Satisfied** Rural

Number of lanes for moving traffic on each approach				Minimum Required Estimated Average Daily Traffic: *Vehicles per day on major Street (total of both approaches)*			*Vehicles per day on higher-volume minor street (one direction only)*		
Major Street		Minor Street		Urban	Rural	Actual	Urban	Rural	Actual
1	.....	1	.....	8,000	5,600	680	2,400	1,680	330
2 or more	.....	1	.....	9,600	6,720	0	2,400	1,680	0
2 or more	.....	2 or more	.....	9,600	6,720	0	3,200	2,240	0
1	.....	2 or more	.....	8,000	5,600	0	3,200	2,240	0

2. Interruption of Continuous Traffic

Urban **Not Satisfied** Rural

Number of lanes for moving traffic on each approach				*Vehicles per day on major Street (total of both approaches)*			*Vehicles per day on higher-volume minor street (one direction only)*		
Major Street		Minor Street		Urban	Rural	Actual	Urban	Rural	Actual
1	.....	1	.....	12,000	8,400	680	1,200	850	330
2 or more	.....	1	.....	14,400	10,080	0	1,200	850	0
2 or more	.....	2 or more	.....	14,400	10,080	0	1,600	1,120	0
1	.....	2 or more	.....	12,000	8,400	0	1,600	1,120	0

3. Combination

Urban **Not Satisfied** Rural

Must satisfy 80% of Warrants 1 and 2	*Must satisfy 80% of Warrants 1 and 2*

Note:

1. Left turn movements from the major street may be included with minor street volumes if a separate signal phase is to be provided for the left-turn movement.
2. To be used only for NEW INTERSECTIONS or other locations where actual traffic volumes cannot be counted.

* Form is based on the sample form found in the Manual on Traffic Signal Design (MTSD) page 20.

TRAFFIC SIGNAL WARRANTS North Star Blvd/Road B TF 2012 HS Peak Pure Feed

(Based on Estimated Average Daily Traffic - See Note 2)

URBAN X **RURAL** _____

1. Minimum Vehicular

Urban **Not Satisfied** Rural

Number of lanes for moving traffic on each approach				Minimum Required Estimated Average Daily Traffic					
				Vehicles per day on major Street (total of both approaches)			*Vehicles per day on higher-volume minor street (one direction only)*		
Major Street		Minor Street		Urban	Rural	Actual	Urban	Rural	Actual
1	.....	1	.....	8,000	5,600	1,790	2,400	1,680	2,750
2 or more	.....	1	.....	9,600	6,720	0	2,400	1,680	0
2 or more	.....	2 or more	.....	9,600	6,720	0	3,200	2,240	0
1	.....	2 or more	.....	8,000	5,600	0	3,200	2,240	0

2. Interruption of Continuous Traffic

Urban **Not Satisfied** Rural

Number of lanes for moving traffic on each approach				*Vehicles per day on major Street (total of both approaches)*			*Vehicles per day on higher-volume minor street (one direction only)*		
Major Street		Minor Street		Urban	Rural	Actual	Urban	Rural	Actual
1	.....	1	.....	12,000	8,400	1,790	1,200	850	2,750
2 or more	.....	1	.....	14,400	10,080	0	1,200	850	0
2 or more	.....	2 or more	.....	14,400	10,080	0	1,600	1,120	0
1	.....	2 or more	.....	12,000	8,400	0	1,600	1,120	0

3. Combination

Urban **Not Satisfied** Rural

Must satisfy 80% of Warrants 1 and 2 | *Must satisfy 80% of Warrants 1 and 2*

Note:

1. Left turn movements from the major street may be included with minor street volumes if a separate signal phase is to be provided for the left-turn movement.
2. To be used only for NEW INTERSECTIONS or other locations where actual traffic volumes cannot be counted.

* Form is based on the sample form found in the Manual on Traffic Signal Design (MTSD) page 20.

TRAFFIC SIGNAL WARRANTS North Star Blvd/Road A TF 2015 HS Peak Mixed Feed

(Based on Estimated Average Daily Traffic - See Note 2)

URBAN X **RURAL** _____

1. Minimum Vehicular

Urban **Not Satisfied** Rural

Number of lanes for moving traffic on each approach				Minimum Required Estimated Average Daily Traffic: *Vehicles per day on major Street (total of both approaches)*			*Vehicles per day on higher-volume minor street (one direction only)*		
Major Street		Minor Street		Urban	Rural	Actual	Urban	Rural	Actual
1	.....	1	.....	8,000	5,600	1,650	2,400	1,680	380
2 or more	.....	1	.....	9,600	6,720	0	2,400	1,680	0
2 or more	.....	2 or more	.....	9,600	6,720	0	3,200	2,240	0
1	.....	2 or more	.....	8,000	5,600	0	3,200	2,240	0

2. Interruption of Continuous Traffic

Urban **Not Satisfied** Rural

Number of lanes for moving traffic on each approach				*Vehicles per day on major Street (total of both approaches)*			*Vehicles per day on higher-volume minor street (one direction only)*		
Major Street		Minor Street		Urban	Rural	Actual	Urban	Rural	Actual
1	.....	1	.....	12,000	8,400	1,650	1,200	850	380
2 or more	.....	1	.....	14,400	10,080	0	1,200	850	0
2 or more	.....	2 or more	.....	14,400	10,080	0	1,600	1,120	0
1	.....	2 or more	.....	12,000	8,400	0	1,600	1,120	0

3. Combination

Urban **Not Satisfied** Rural

Must satisfy 80% of Warrants 1 and 2 | *Must satisfy 80% of Warrants 1 and 2*

Note:

1. Left turn movements from the major street may be included with minor street volumes if a separate signal phase is to be provided for the left-turn movement.
2. To be used only for NEW INTERSECTIONS or other locations where actual traffic volumes cannot be counted.

* Form is based on the sample form found in the Manual on Traffic Signal Design (MTSD) page 20.

TRAFFIC SIGNAL WARRANTS North Star Blvd/Road B TF 2015 HS Peak Mixed Feed

(Based on Estimated Average Daily Traffic - See Note 2)

URBAN X **RURAL** _____

1. Minimum Vehicular

Urban **Not Satisfied** Rural

Number of lanes for moving traffic on each approach				Minimum Required Estimated Average Daily Traffic: *Vehicles per day on major Street (total of both approaches)*			*Vehicles per day on higher-volume minor street (one direction only)*		
Major Street		Minor Street		Urban	Rural	Actual	Urban	Rural	Actual
1	.....	1	.....	8,000	5,600	1,920	2,400	1,680	2,930
2 or more	.....	1	.....	9,600	6,720	0	2,400	1,680	0
2 or more	.....	2 or more	.....	9,600	6,720	0	3,200	2,240	0
1	.....	2 or more	.....	8,000	5,600	0	3,200	2,240	0

2. Interruption of Continuous Traffic

Urban **Not Satisfied** Rural

Number of lanes for moving traffic on each approach				*Vehicles per day on major Street (total of both approaches)*			*Vehicles per day on higher-volume minor street (one direction only)*		
Major Street		Minor Street		Urban	Rural	Actual	Urban	Rural	Actual
1	.....	1	.....	12,000	8,400	1,920	1,200	850	2,930
2 or more	.....	1	.....	14,400	10,080	0	1,200	850	0
2 or more	.....	2 or more	.....	14,400	10,080	0	1,600	1,120	0
1	.....	2 or more	.....	12,000	8,400	0	1,600	1,120	0

3. Combination

Urban **Not Satisfied** Rural

Must satisfy 80% of Warrants 1 and 2 | *Must satisfy 80% of Warrants 1 and 2*

Note:

1. Left turn movements from the major street may be included with minor street volumes if a separate signal phase is to be provided for the left-turn movement.
2. To be used only for NEW INTERSECTIONS or other locations where actual traffic volumes cannot be counted.

* Form is based on the sample form found in the Manual on Traffic Signal Design (MTSD) page 20.

TRAFFIC SIGNAL WARRANTS North Star Blvd/Road A TF 2015 HS Peak Pure Feed

(Based on Estimated Average Daily Traffic - See Note 2)

URBAN X **RURAL** _____

1. Minimum Vehicular				**Minimum Required Estimated Average Daily Traffic**					
Urban **Not Satisfied**		Rural		*Vehicles per day on major Street (total of both approaches)*			*Vehicles per day on higher-volume minor street (one direction only)*		
Number of lanes for moving traffic on each approach									
Major Street		Minor Street		Urban	Rural	Actual	Urban	Rural	Actual
1	……	1	……	8,000	5,600	800	2,400	1,680	390
2 or more	……	1	……	9,600	6,720	0	2,400	1,680	0
2 or more	……	2 or more	……	9,600	6,720	0	3,200	2,240	0
1	……	2 or more	……	8,000	5,600	0	3,200	2,240	0
2. Interruption of Continuous Traffic									
Urban **Not Satisfied**		Rural		*Vehicles per day on major Street (total of both approaches)*			*Vehicles per day on higher-volume minor street (one direction only)*		
Number of lanes for moving traffic on each approach									
Major Street		Minor Street		Urban	Rural	Actual	Urban	Rural	Actual
1	……	1	……	12,000	8,400	800	1,200	850	390
2 or more	……	1	……	14,400	10,080	0	1,200	850	0
2 or more	……	2 or more	……	14,400	10,080	0	1,600	1,120	0
1	……	2 or more	……	12,000	8,400	0	1,600	1,120	0
3. Combination									
Urban **Not Satisfied**		Rural		*Must satisfy 80% of Warrants 1 and 2*			*Must satisfy 80% of Warrants 1 and 2*		

Note:

1. Left turn movements from the major street may be included with minor street volumes if a separate signal phase is to be provided for the left-turn movement.
2. To be used only for NEW INTERSECTIONS or other locations where actual traffic volumes cannot be counted.

* Form is based on the sample form found in the Manual on Traffic Signal Design (MTSD) page 20.

TRAFFIC SIGNAL WARRANTS North Star Blvd/Road B TF 2015 HS Peak Pure Feed

(Based on Estimated Average Daily Traffic - See Note 2)

URBAN X **RURAL** _____

1. Minimum Vehicular				**Minimum Required Estimated Average Daily Traffic**					
Urban **Not Satisfied**		Rural		*Vehicles per day on major Street (total of both approaches)*			*Vehicles per day on higher-volume minor street (one direction only)*		
Number of lanes for moving traffic on each approach									
Major Street		Minor Street		Urban	Rural	Actual	Urban	Rural	Actual
1	……	1	……	8,000	5,600	2,160	2,400	1,680	3,140
2 or more	……	1	……	9,600	6,720	0	2,400	1,680	0
2 or more	……	2 or more	……	9,600	6,720	0	3,200	2,240	0
1	……	2 or more	……	8,000	5,600	0	3,200	2,240	0
2. Interruption of Continuous Traffic									
Urban **Not Satisfied**		Rural		*Vehicles per day on major Street (total of both approaches)*			*Vehicles per day on higher-volume minor street (one direction only)*		
Number of lanes for moving traffic on each approach									
Major Street		Minor Street		Urban	Rural	Actual	Urban	Rural	Actual
1	……	1	……	12,000	8,400	2,160	1,200	850	3,140
2 or more	……	1	……	14,400	10,080	0	1,200	850	0
2 or more	……	2 or more	……	14,400	10,080	0	1,600	1,120	0
1	……	2 or more	……	12,000	8,400	0	1,600	1,120	0
3. Combination									
Urban **Not Satisfied**		Rural		*Must satisfy 80% of Warrants 1 and 2*			*Must satisfy 80% of Warrants 1 and 2*		

Note:

1. Left turn movements from the major street may be included with minor street volumes if a separate signal phase is to be provided for the left-turn movement.
2. To be used only for NEW INTERSECTIONS or other locations where actual traffic volumes cannot be counted.

* Form is based on the sample form found in the Manual on Traffic Signal Design (MTSD) page 20.

TRAFFIC SIGNAL WARRANTS North Star Blvd/Road A TF 2015 ES Peak Mixed Feed

(Based on Estimated Average Daily Traffic - See Note 2)

URBAN X **RURAL** _____

1. Minimum Vehicular

Urban **Not Satisfied** Rural

Number of lanes for moving traffic on each approach

Major Street	Minor Street	Urban	Rural	Actual	Urban	Rural	Actual
		Vehicles per day on major Street (total of both approaches)			*Vehicles per day on higher-volume minor street (one direction only)*		
		Minimum Required Estimated Average Daily Traffic					
1	1	8,000	5,600	760	2,400	1,680	300
2 or more	1	9,600	6,720	0	2,400	1,680	0
2 or more	2 or more	9,600	6,720	0	3,200	2,240	0
1	2 or more	8,000	5,600	0	3,200	2,240	0

2. Interruption of Continuous Traffic

Urban **Not Satisfied** Rural

Number of lanes for moving traffic on each approach

Major Street	Minor Street	Urban	Rural	Actual	Urban	Rural	Actual
		Vehicles per day on major Street (total of both approaches)			*Vehicles per day on higher-volume minor street (one direction only)*		
1	1	12,000	8,400	760	1,200	850	300
2 or more	1	14,400	10,080	0	1,200	850	0
2 or more	2 or more	14,400	10,080	0	1,600	1,120	0
1	2 or more	12,000	8,400	0	1,600	1,120	0

3. Combination

Urban **Not Satisfied** Rural

Must satisfy 80% of Warrants 1 and 2 | *Must satisfy 80% of Warrants 1 and 2*

Note:

1. Left turn movements from the major street may be included with minor street volumes if a separate signal phase is to be provided for the left-turn movement.
2. To be used only for NEW INTERSECTIONS or other locations where actual traffic volumes cannot be counted.

* Form is based on the sample form found in the Manual on Traffic Signal Design (MTSD) page 20.

TRAFFIC SIGNAL WARRANTS North Star Blvd/Road B TF 2015 ES Peak Mixed Feed

(Based on Estimated Average Daily Traffic - See Note 2)

URBAN X **RURAL** _____

1. Minimum Vehicular

Urban **Not Satisfied** Rural

Minimum Required Estimated Average Daily Traffic

Number of lanes for moving traffic on each approach				*Vehicles per day on major Street (total of both approaches)*			*Vehicles per day on higher-volume minor street (one direction only)*		
Major Street		Minor Street		Urban	Rural	Actual	Urban	Rural	Actual
1	.....	1	.....	8,000	5,600	1,600	2,400	1,680	2,060
2 or more	.....	1	.....	9,600	6,720	0	2,400	1,680	0
2 or more	.....	2 or more	.....	9,600	6,720	0	3,200	2,240	0
1	.....	2 or more	.....	8,000	5,600	0	3,200	2,240	0

2. Interruption of Continuous Traffic

Urban **Not Satisfied** Rural

Number of lanes for moving traffic on each approach				*Vehicles per day on major Street (total of both approaches)*			*Vehicles per day on higher-volume minor street (one direction only)*		
Major Street		Minor Street		Urban	Rural	Actual	Urban	Rural	Actual
1	.....	1	.....	12,000	8,400	1,600	1,200	850	2,060
2 or more	.....	1	.....	14,400	10,080	0	1,200	850	0
2 or more	.....	2 or more	.....	14,400	10,080	0	1,600	1,120	0
1	.....	2 or more	.....	12,000	8,400	0	1,600	1,120	0

3. Combination

Urban **Not Satisfied** Rural

Must satisfy 80% of Warrants 1 and 2 | *Must satisfy 80% of Warrants 1 and 2*

Note:

1. Left turn movements from the major street may be included with minor street volumes if a separate signal phase is to be provided for the left-turn movement.
2. To be used only for NEW INTERSECTIONS or other locations where actual traffic volumes cannot be counted.

* Form is based on the sample form found in the Manual on Traffic Signal Design (MTSD) page 20.

TRAFFIC SIGNAL WARRANTS North Star Blvd/Road A TF 2015 ES Peak Pure Feed

(Based on Estimated Average Daily Traffic - See Note 2)

URBAN X **RURAL** _____

1. Minimum Vehicular				**Minimum Required Estimated Average Daily Traffic**					
Urban **Not Satisfied**		Rural		*Vehicles per day on major Street (total of both approaches)*			*Vehicles per day on higher-volume minor street (one direction only)*		
Number of lanes for moving traffic on each approach									
Major Street		Minor Street		Urban	Rural	Actual	Urban	Rural	Actual
1	……	1	……	8,000	5,600	520	2,400	1,680	300
2 or more	……	1	……	9,600	6,720	0	2,400	1,680	0
2 or more	……	2 or more	……	9,600	6,720	0	3,200	2,240	0
1	……	2 or more	……	8,000	5,600	0	3,200	2,240	0
2. Interruption of Continuous Traffic									
Urban **Not Satisfied**		Rural		*Vehicles per day on major Street (total of both approaches)*			*Vehicles per day on higher-volume minor street (one direction only)*		
Number of lanes for moving traffic on each approach									
Major Street		Minor Street		Urban	Rural	Actual	Urban	Rural	Actual
1	……	1	……	12,000	8,400	520	1,200	850	300
2 or more	……	1	……	14,400	10,080	0	1,200	850	0
2 or more	……	2 or more	……	14,400	10,080	0	1,600	1,120	0
1	……	2 or more	……	12,000	8,400	0	1,600	1,120	0
3. Combination									
Urban **Not Satisfied**		Rural		*Must satisfy 80% of Warrants 1 and 2*			*Must satisfy 80% of Warrants 1 and 2*		

Note:

1. Left turn movements from the major street may be included with minor street volumes if a separate signal phase is to be provided for the left-turn movement.
2. To be used only for NEW INTERSECTIONS or other locations where actual traffic volumes cannot be counted.

* Form is based on the sample form found in the Manual on Traffic Signal Design (MTSD) page 20.

TRAFFIC SIGNAL WARRANTS North Star Blvd/Road B TF 2015 ES Peak Pure Feed

(Based on Estimated Average Daily Traffic - See Note 2)

URBAN X **RURAL** _____

1. Minimum Vehicular

Urban **Not Satisfied** Rural

Number of lanes for moving traffic on each approach				Minimum Required Estimated Average Daily Traffic					
				Vehicles per day on major Street (total of both approaches)			*Vehicles per day on higher-volume minor street (one direction only)*		
Major Street		Minor Street		Urban	Rural	Actual	Urban	Rural	Actual
1	.....	1	.....	8,000	5,600	1,670	2,400	1,680	2,130
2 or more	.....	1	.....	9,600	6,720	0	2,400	1,680	0
2 or more	.....	2 or more	.....	9,600	6,720	0	3,200	2,240	0
1	.....	2 or more	.....	8,000	5,600	0	3,200	2,240	0

2. Interruption of Continuous Traffic

Urban **Not Satisfied** Rural

Number of lanes for moving traffic on each approach				*Vehicles per day on major Street (total of both approaches)*			*Vehicles per day on higher-volume minor street (one direction only)*		
Major Street		Minor Street		Urban	Rural	Actual	Urban	Rural	Actual
1	.....	1	.....	12,000	8,400	1,670	1,200	850	2,130
2 or more	.....	1	.....	14,400	10,080	0	1,200	850	0
2 or more	.....	2 or more	.....	14,400	10,080	0	1,600	1,120	0
1	.....	2 or more	.....	12,000	8,400	0	1,600	1,120	0

3. Combination

Urban **Not Satisfied** Rural

Must satisfy 80% of Warrants 1 and 2	*Must satisfy 80% of Warrants 1 and 2*

Note:

1. Left turn movements from the major street may be included with minor street volumes if a separate signal phase is to be provided for the left-turn movement.
2. To be used only for NEW INTERSECTIONS or other locations where actual traffic volumes cannot be counted.

* Form is based on the sample form found in the Manual on Traffic Signal Design (MTSD) page 20.

APPENDIX R

QUEUING ANALYSIS RESULTS AT ROUTE 50 AND GOSHEN ROAD

Movement	EBL	EBT	EBR	WBL	WBT	WBR	NBL	NBT	NBR	SBL	SBT	SBR
Lane Configurations												
Volume (veh/h)	9	802	8	19	338	11	3	8	24	4	1	0
Sign Control		Free			Free			Stop			Stop	
Grade		0%			0%			0%			0%	
Peak Hour Factor	0.90	0.90	0.90	0.91	0.91	0.91	0.67	0.67	0.67	0.42	0.42	0.42
Hourly flow rate (vph)	10	891	9	21	371	12	4	12	36	10	2	0
Pedestrians												
Lane Width (ft)												
Walking Speed (ft/s)												
Percent Blockage												
Right turn flare (veh)												
Median type		None			None							
Median storage veh)												
Upstream signal (ft)												
pX, platoon unblocked												
vC, conflicting volume	384			900			1140	1336	446	921	1333	186
vC1, stage 1 conf vol												
vC2, stage 2 conf vol												
vCu, unblocked vol	384			900			1140	1336	446	921	1333	186
tC, single (s)	4.1			4.1			7.5	6.5	6.9	7.5	6.5	6.9
tC, 2 stage (s)												
tF (s)	2.2			2.2			3.5	4.0	3.3	3.5	4.0	3.3
p0 queue free %	99			97			97	92	94	95	98	100
cM capacity (veh/h)	1172			751			150	147	560	193	147	825

Direction, Lane #	EB 1	EB 2	EB 3	EB 4	WB 1	WB 2	WB 3	WB 4	NB 1	SB 1
Volume Total	10	446	446	9	21	186	186	12	52	12
Volume Left	10	0	0	0	21	0	0	0	4	10
Volume Right	0	0	0	9	0	0	0	12	36	0
cSH	1172	1700	1700	1700	751	1700	1700	1700	298	181
Volume to Capacity	0.01	0.26	0.26	0.01	0.03	0.11	0.11	0.01	0.18	0.07
Queue Length 95th (ft)	1	0	0	0	2	0	0	0	16	5
Control Delay (s)	8.1	0.0	0.0	0.0	9.9	0.0	0.0	0.0	19.6	26.2
Lane LOS	A				A				C	D
Approach Delay (s)	0.1				0.5				19.6	26.2
Approach LOS									C	D

Intersection Summary			
Average Delay	1.2		
Intersection Capacity Utilization	32.2%	ICU Level of Service	A
Analysis Period (min)	15		

Movement	EBL	EBT	EBR	WBL	WBT	WBR	NBL	NBT	NBR	SBL	SBT	SBR
Lane Configurations												
Volume (veh/h)	1	272	4	14	1033	4	1	1	14	1	7	4
Sign Control		Free			Free			Stop			Stop	
Grade		0%			0%			0%			0%	
Peak Hour Factor	0.91	0.91	0.91	0.86	0.86	0.86	0.67	0.67	0.67	0.75	0.75	0.75
Hourly flow rate (vph)	1	299	4	16	1201	5	1	1	21	1	9	5
Pedestrians												
Lane Width (ft)												
Walking Speed (ft/s)												
Percent Blockage												
Right turn flare (veh)												
Median type		None			None							
Median storage veh)												
Upstream signal (ft)												
pX, platoon unblocked												
vC, conflicting volume	1206			303			944	1539	149	1407	1539	601
vC1, stage 1 conf vol												
vC2, stage 2 conf vol												
vCu, unblocked vol	1206			303			944	1539	149	1407	1539	601
tC, single (s)	4.1			4.1			7.5	6.5	6.9	7.5	6.5	6.9
tC, 2 stage (s)												
tF (s)	2.2			2.2			3.5	4.0	3.3	3.5	4.0	3.3
p0 queue free %	100			99			99	99	98	99	92	99
cM capacity (veh/h)	574			1254			198	113	870	94	113	444

Direction, Lane #	EB 1	EB 2	EB 3	EB 4	WB 1	WB 2	WB 3	WB 4	NB 1	SB 1
Volume Total	1	149	149	4	16	601	601	5	24	16
Volume Left	1	0	0	0	16	0	0	0	1	1
Volume Right	0	0	0	4	0	0	0	5	21	5
cSH	574	1700	1700	1700	1254	1700	1700	1700	533	147
Volume to Capacity	0.00	0.09	0.09	0.00	0.01	0.35	0.35	0.00	0.04	0.11
Queue Length 95th (ft)	0	0	0	0	1	0	0	0	4	9
Control Delay (s)	11.3	0.0	0.0	0.0	7.9	0.0	0.0	0.0	12.1	32.5
Lane LOS	B				A				B	D
Approach Delay (s)	0.0				0.1				12.1	32.5
Approach LOS									B	D

Intersection Summary			
Average Delay	0.6		
Intersection Capacity Utilization	38.6%	ICU Level of Service	A
Analysis Period (min)	15		

Movement	EBL	EBT	EBR	WBL	WBT	WBR	NBL	NBT	NBR	SBL	SBT	SBR
Lane Configurations												
Volume (veh/h)	14	1047	4	10	297	12	2	14	16	5	1	0
Sign Control		Free			Free			Stop			Stop	
Grade		0%			0%			0%			0%	
Peak Hour Factor	0.91	0.91	0.91	0.71	0.71	0.71	0.89	0.89	0.89	0.50	0.50	0.50
Hourly flow rate (vph)	15	1151	4	14	418	17	2	16	18	10	2	0
Pedestrians												
Lane Width (ft)												
Walking Speed (ft/s)												
Percent Blockage												
Right turn flare (veh)												
Median type		None			None							
Median storage veh)												
Upstream signal (ft)												
pX, platoon unblocked												
vC, conflicting volume	435			1155			1420	1645	575	1078	1632	209
vC1, stage 1 conf vol												
vC2, stage 2 conf vol												
vCu, unblocked vol	435			1155			1420	1645	575	1078	1632	209
tC, single (s)	4.1			4.1			7.5	6.5	6.9	7.5	6.5	6.9
tC, 2 stage (s)												
tF (s)	2.2			2.2			3.5	4.0	3.3	3.5	4.0	3.3
p0 queue free %	99			98			98	83	96	93	98	100
cM capacity (veh/h)	1121			601			93	95	461	141	97	797

Direction, Lane #	EB 1	EB 2	EB 3	EB 4	WB 1	WB 2	WB 3	WB 4	NB 1	SB 1
Volume Total	15	575	575	4	14	209	209	17	36	12
Volume Left	15	0	0	0	14	0	0	0	2	10
Volume Right	0	0	0	4	0	0	0	17	18	0
cSH	1121	1700	1700	1700	601	1700	1700	1700	157	131
Volume to Capacity	0.01	0.34	0.34	0.00	0.02	0.12	0.12	0.01	0.23	0.09
Queue Length 95th (ft)	1	0	0	0	2	0	0	0	21	7
Control Delay (s)	8.3	0.0	0.0	0.0	11.1	0.0	0.0	0.0	34.6	35.2
Lane LOS	A				B				D	E
Approach Delay (s)	0.1				0.3				34.6	35.2
Approach LOS									D	E

Intersection Summary			
Average Delay	1.2		
Intersection Capacity Utilization	38.9%	ICU Level of Service	A
Analysis Period (min)	15		

Movement	EBL	EBT	EBR	WBL	WBT	WBR	NBL	NBT	NBR	SBL	SBT	SBR
Lane Configurations												
Volume (veh/h)	4	310	3	11	652	2	2	1	5	1	3	2
Sign Control		Free			Free			Stop			Stop	
Grade		0%			0%			0%			0%	
Peak Hour Factor	0.91	0.91	0.91	0.89	0.89	0.89	1.00	1.00	1.00	0.50	0.50	0.50
Hourly flow rate (vph)	4	341	3	12	733	2	2	1	5	2	6	4
Pedestrians												
Lane Width (ft)												
Walking Speed (ft/s)												
Percent Blockage												
Right turn flare (veh)												
Median type		None			None							
Median storage veh)												
Upstream signal (ft)												
pX, platoon unblocked												
vC, conflicting volume	735			344			747	1109	170	942	1110	366
vC1, stage 1 conf vol												
vC2, stage 2 conf vol												
vCu, unblocked vol	735			344			747	1109	170	942	1110	366
tC, single (s)	4.1			4.1			7.5	6.5	6.9	7.5	6.5	6.9
tC, 2 stage (s)												
tF (s)	2.2			2.2			3.5	4.0	3.3	3.5	4.0	3.3
p0 queue free %	99			99			99	100	99	99	97	99
cM capacity (veh/h)	866			1212			289	205	844	213	205	631

Direction, Lane #	EB 1	EB 2	EB 3	EB 4	WB 1	WB 2	WB 3	WB 4	NB 1	SB 1
Volume Total	4	170	170	3	12	366	366	2	8	12
Volume Left	4	0	0	0	12	0	0	0	2	2
Volume Right	0	0	0	3	0	0	0	2	5	4
cSH	866	1700	1700	1700	1212	1700	1700	1700	452	267
Volume to Capacity	0.01	0.10	0.10	0.00	0.01	0.22	0.22	0.00	0.02	0.05
Queue Length 95th (ft)	0	0	0	0	1	0	0	0	1	4
Control Delay (s)	9.2	0.0	0.0	0.0	8.0	0.0	0.0	0.0	13.1	19.1
Lane LOS	A				A				B	C
Approach Delay (s)	0.1				0.1				13.1	19.1
Approach LOS									B	C

Intersection Summary			
Average Delay	0.4		
Intersection Capacity Utilization	28.0%	ICU Level of Service	A
Analysis Period (min)	15		

Movement	EBL	EBT	EBR	WBL	WBT	WBR	NBL	NBT	NBR	SBL	SBT	SBR
Lane Configurations												
Volume (veh/h)	10	872	11	25	384	12	12	8	38	4	1	0
Sign Control		Free			Free			Stop			Stop	
Grade		0%			0%			0%			0%	
Peak Hour Factor	0.92	0.92	0.92	0.92	0.92	0.92	0.92	0.92	0.92	0.92	0.92	0.92
Hourly flow rate (vph)	11	948	12	27	417	13	13	9	41	4	1	0
Pedestrians												
Lane Width (ft)												
Walking Speed (ft/s)												
Percent Blockage												
Right turn flare (veh)												
Median type		None			None							
Median storage veh)												
Upstream signal (ft)												
pX, platoon unblocked												
vC, conflicting volume	430			960			1233	1454	474	1013	1453	209
vC1, stage 1 conf vol												
vC2, stage 2 conf vol												
vCu, unblocked vol	430			960			1233	1454	474	1013	1453	209
tC, single (s)	4.1			4.1			7.5	6.5	6.9	7.5	6.5	6.9
tC, 2 stage (s)												
tF (s)	2.2			2.2			3.5	4.0	3.3	3.5	4.0	3.3
p0 queue free %	99			96			90	93	92	97	99	100
cM capacity (veh/h)	1125			713			127	123	537	163	123	797

Direction, Lane #	EB 1	EB 2	EB 3	EB 4	WB 1	WB 2	WB 3	WB 4	NB 1	SB 1
Volume Total	11	474	474	12	27	209	209	13	63	5
Volume Left	11	0	0	0	27	0	0	0	13	4
Volume Right	0	0	0	12	0	0	0	13	41	0
cSH	1125	1700	1700	1700	713	1700	1700	1700	252	153
Volume to Capacity	0.01	0.28	0.28	0.01	0.04	0.12	0.12	0.01	0.25	0.04
Queue Length 95th (ft)	1	0	0	0	3	0	0	0	24	3
Control Delay (s)	8.2	0.0	0.0	0.0	10.3	0.0	0.0	0.0	24.0	29.4
Lane LOS	A				B				C	D
Approach Delay (s)	0.1				0.6				24.0	29.4
Approach LOS									C	D

Intersection Summary			
Average Delay	1.4		
Intersection Capacity Utilization	34.1%	ICU Level of Service	A
Analysis Period (min)	15		

Movement	EBL	EBT	EBR	WBL	WBT	WBR	NBL	NBT	NBR	SBL	SBT	SBR
Lane Configurations												
Volume (veh/h)	1	325	12	29	1129	4	5	1	22	1	7	4
Sign Control		Free			Free			Stop			Stop	
Grade		0%			0%			0%			0%	
Peak Hour Factor	0.92	0.92	0.92	0.92	0.92	0.92	0.92	0.92	0.92	0.92	0.92	0.92
Hourly flow rate (vph)	1	353	13	32	1227	4	5	1	24	1	8	4
Pedestrians												
Lane Width (ft)												
Walking Speed (ft/s)												
Percent Blockage												
Right turn flare (veh)												
Median type		None			None							
Median storage veh)												
Upstream signal (ft)												
pX, platoon unblocked												
vC, conflicting volume	1232			366			1040	1650	177	1493	1659	614
vC1, stage 1 conf vol												
vC2, stage 2 conf vol												
vCu, unblocked vol	1232			366			1040	1650	177	1493	1659	614
tC, single (s)	4.1			4.1			7.5	6.5	6.9	7.5	6.5	6.9
tC, 2 stage (s)												
tF (s)	2.2			2.2			3.5	4.0	3.3	3.5	4.0	3.3
p0 queue free %	100			97			97	99	97	99	92	99
cM capacity (veh/h)	562			1189			168	95	836	80	94	435

Direction, Lane #	EB 1	EB 2	EB 3	EB 4	WB 1	WB 2	WB 3	WB 4	NB 1	SB 1
Volume Total	1	177	177	13	32	614	614	4	30	13
Volume Left	1	0	0	0	32	0	0	0	5	1
Volume Right	0	0	0	13	0	0	0	4	24	4
cSH	562	1700	1700	1700	1189	1700	1700	1700	420	125
Volume to Capacity	0.00	0.10	0.10	0.01	0.03	0.36	0.36	0.00	0.07	0.10
Queue Length 95th (ft)	0	0	0	0	2	0	0	0	6	9
Control Delay (s)	11.4	0.0	0.0	0.0	8.1	0.0	0.0	0.0	14.2	37.2
Lane LOS	B				A				B	E
Approach Delay (s)	0.0				0.2				14.2	37.2
Approach LOS									B	E

Intersection Summary			
Average Delay	0.7		
Intersection Capacity Utilization	41.2%	ICU Level of Service	A
Analysis Period (min)	15		

Movement	EBL	EBT	EBR	WBL	WBT	WBR	NBL	NBT	NBR	SBL	SBT	SBR
Lane Configurations												
Volume (veh/h)	10	872	47	82	384	12	29	8	65	4	1	0
Sign Control		Free			Free			Stop			Stop	
Grade		0%			0%			0%			0%	
Peak Hour Factor	0.92	0.92	0.92	0.92	0.92	0.92	0.92	0.92	0.92	0.92	0.92	0.92
Hourly flow rate (vph)	11	948	51	89	417	13	32	9	71	4	1	0
Pedestrians												
Lane Width (ft)												
Walking Speed (ft/s)												
Percent Blockage												
Right turn flare (veh)												
Median type		None			None							
Median storage veh)												
Upstream signal (ft)												
pX, platoon unblocked												
vC, conflicting volume	430			999			1357	1578	474	1166	1616	209
vC1, stage 1 conf vol												
vC2, stage 2 conf vol												
vCu, unblocked vol	430			999			1357	1578	474	1166	1616	209
tC, single (s)	4.1			4.2			7.6	6.5	7.0	7.5	6.5	6.9
tC, 2 stage (s)												
tF (s)	2.2			2.2			3.5	4.0	3.3	3.5	4.0	3.3
p0 queue free %	99			87			67	91	87	96	99	100
cM capacity (veh/h)	1125			677			94	93	534	107	88	797

Direction, Lane #	EB 1	EB 2	EB 3	EB 4	WB 1	WB 2	WB 3	WB 4	NB 1	SB 1
Volume Total	11	474	474	51	89	209	209	13	111	5
Volume Left	11	0	0	0	89	0	0	0	32	4
Volume Right	0	0	0	51	0	0	0	13	71	0
cSH	1125	1700	1700	1700	677	1700	1700	1700	198	103
Volume to Capacity	0.01	0.28	0.28	0.03	0.13	0.12	0.12	0.01	0.56	0.05
Queue Length 95th (ft)	1	0	0	0	11	0	0	0	75	4
Control Delay (s)	8.2	0.0	0.0	0.0	11.1	0.0	0.0	0.0	44.1	41.9
Lane LOS	A				B				E	E
Approach Delay (s)	0.1				1.9				44.1	41.9
Approach LOS									E	E

Intersection Summary			
Average Delay	3.8		
Intersection Capacity Utilization	44.4%	ICU Level of Service	A
Analysis Period (min)	15		

Movement	EBL	EBT	EBR	WBL	WBT	WBR	NBL	NBT	NBR	SBL	SBT	SBR
Lane Configurations												
Volume (veh/h)	1	325	24	48	1129	4	29	1	60	1	7	4
Sign Control		Free			Free			Stop			Stop	
Grade		0%			0%			0%			0%	
Peak Hour Factor	0.92	0.92	0.92	0.92	0.92	0.92	0.92	0.92	0.92	0.92	0.92	0.92
Hourly flow rate (vph)	1	353	26	52	1227	4	32	1	65	1	8	4
Pedestrians												
Lane Width (ft)												
Walking Speed (ft/s)												
Percent Blockage												
Right turn flare (veh)												
Median type		None			None							
Median storage veh)												
Upstream signal (ft)												
pX, platoon unblocked												
vC, conflicting volume	1232			379			1082	1691	177	1576	1713	614
vC1, stage 1 conf vol												
vC2, stage 2 conf vol												
vCu, unblocked vol	1232			379			1082	1691	177	1576	1713	614
tC, single (s)	4.1			4.2			7.6	6.5	7.0	7.5	6.5	6.9
tC, 2 stage (s)												
tF (s)	2.2			2.2			3.6	4.0	3.3	3.5	4.0	3.3
p0 queue free %	100			96			79	99	92	98	91	99
cM capacity (veh/h)	562			1161			147	88	827	65	85	435

Direction, Lane #	EB 1	EB 2	EB 3	EB 4	WB 1	WB 2	WB 3	WB 4	NB 1	SB 1
Volume Total	1	177	177	26	52	614	614	4	98	13
Volume Left	1	0	0	0	52	0	0	0	32	1
Volume Right	0	0	0	26	0	0	0	4	65	4
cSH	562	1700	1700	1700	1161	1700	1700	1700	321	113
Volume to Capacity	0.00	0.10	0.10	0.02	0.04	0.36	0.36	0.00	0.31	0.12
Queue Length 95th (ft)	0	0	0	0	4	0	0	0	32	10
Control Delay (s)	11.4	0.0	0.0	0.0	8.2	0.0	0.0	0.0	21.1	41.2
Lane LOS	B				A				C	E
Approach Delay (s)	0.0				0.3				21.1	41.2
Approach LOS									C	E

Intersection Summary			
Average Delay	1.7		
Intersection Capacity Utilization	56.6%	ICU Level of Service	B
Analysis Period (min)	15		

Movement	EBL	EBT	EBR	WBL	WBT	WBR	NBL	NBT	NBR	SBL	SBT	SBR
Lane Configurations												
Volume (veh/h)	10	872	42	55	384	12	26	8	52	4	1	0
Sign Control		Free			Free			Stop			Stop	
Grade		0%			0%			0%			0%	
Peak Hour Factor	0.92	0.92	0.92	0.92	0.92	0.92	0.92	0.92	0.92	0.92	0.92	0.92
Hourly flow rate (vph)	11	948	46	60	417	13	28	9	57	4	1	0
Pedestrians												
Lane Width (ft)												
Walking Speed (ft/s)												
Percent Blockage												
Right turn flare (veh)												
Median type		None			None							
Median storage veh)												
Upstream signal (ft)												
pX, platoon unblocked												
vC, conflicting volume	430			993			1298	1520	474	1093	1552	209
vC1, stage 1 conf vol												
vC2, stage 2 conf vol												
vCu, unblocked vol	430			993			1298	1520	474	1093	1552	209
tC, single (s)	4.1			4.2			7.6	6.5	6.9	7.5	6.5	6.9
tC, 2 stage (s)												
tF (s)	2.2			2.2			3.5	4.0	3.3	3.5	4.0	3.3
p0 queue free %	99			91			74	92	89	97	99	100
cM capacity (veh/h)	1125			680			107	106	537	131	102	797

Direction, Lane #	EB 1	EB 2	EB 3	EB 4	WB 1	WB 2	WB 3	WB 4	NB 1	SB 1
Volume Total	11	474	474	46	60	209	209	13	93	5
Volume Left	11	0	0	0	60	0	0	0	28	4
Volume Right	0	0	0	46	0	0	0	13	57	0
cSH	1125	1700	1700	1700	680	1700	1700	1700	208	124
Volume to Capacity	0.01	0.28	0.28	0.03	0.09	0.12	0.12	0.01	0.45	0.04
Queue Length 95th (ft)	1	0	0	0	7	0	0	0	53	3
Control Delay (s)	8.2	0.0	0.0	0.0	10.8	0.0	0.0	0.0	35.8	35.4
Lane LOS	A				B				E	E
Approach Delay (s)	0.1				1.3				35.8	35.4
Approach LOS									E	E

Intersection Summary			
Average Delay	2.7		
Intersection Capacity Utilization	42.3%	ICU Level of Service	A
Analysis Period (min)	15		

Movement	EBL	EBT	EBR	WBL	WBT	WBR	NBL	NBT	NBR	SBL	SBT	SBR
Lane Configurations												
Volume (veh/h)	1	325	22	39	1129	4	26	1	42	1	7	4
Sign Control		Free			Free			Stop			Stop	
Grade		0%			0%			0%			0%	
Peak Hour Factor	0.92	0.92	0.92	0.92	0.92	0.92	0.92	0.92	0.92	0.92	0.92	0.92
Hourly flow rate (vph)	1	353	24	42	1227	4	28	1	46	1	8	4
Pedestrians												
Lane Width (ft)												
Walking Speed (ft/s)												
Percent Blockage												
Right turn flare (veh)												
Median type		None			None							
Median storage veh)												
Upstream signal (ft)												
pX, platoon unblocked												
vC, conflicting volume	1232			377			1062	1672	177	1537	1691	614
vC1, stage 1 conf vol												
vC2, stage 2 conf vol												
vCu, unblocked vol	1232			377			1062	1672	177	1537	1691	614
tC, single (s)	4.1			4.2			7.7	6.5	7.0	7.5	6.5	6.9
tC, 2 stage (s)												
tF (s)	2.2			2.2			3.6	4.0	3.3	3.5	4.0	3.3
p0 queue free %	100			96			81	99	94	98	91	99
cM capacity (veh/h)	562			1171			153	91	827	72	89	435

Direction, Lane #	EB 1	EB 2	EB 3	EB 4	WB 1	WB 2	WB 3	WB 4	NB 1	SB 1
Volume Total	1	177	177	24	42	614	614	4	75	13
Volume Left	1	0	0	0	42	0	0	0	28	1
Volume Right	0	0	0	24	0	0	0	4	46	4
cSH	562	1700	1700	1700	1171	1700	1700	1700	297	118
Volume to Capacity	0.00	0.10	0.10	0.01	0.04	0.36	0.36	0.00	0.25	0.11
Queue Length 95th (ft)	0	0	0	0	3	0	0	0	24	9
Control Delay (s)	11.4	0.0	0.0	0.0	8.2	0.0	0.0	0.0	21.1	39.4
Lane LOS	B				A				C	E
Approach Delay (s)	0.0				0.3				21.1	39.4
Approach LOS									C	E

Intersection Summary			
Average Delay	1.4		
Intersection Capacity Utilization	49.8%	ICU Level of Service	A
Analysis Period (min)	15		

Lane Group	EBL	EBT	EBR	WBL	WBT	WBR	NBT	SBT
Lane Group Flow (vph)	11	1093	60	96	476	13	149	6
v/c Ratio	0.08	0.72	0.08	0.41	0.23	0.01	0.56	0.02
Control Delay	40.6	21.7	4.7	40.2	7.7	4.7	35.4	31.5
Queue Delay	0.0	0.0	0.0	0.0	0.0	0.0	0.0	0.0
Total Delay	40.6	21.7	4.7	40.2	7.7	4.7	35.4	31.5
Queue Length 50th (ft)	5	220	1	45	41	0	55	3
Queue Length 95th (ft)	24	342	22	104	111	9	129	15
Internal Link Dist (ft)		2435			7494		227	1669
Turn Bay Length (ft)	150		190	120		120		
Base Capacity (vph)	325	3505	1583	325	3343	1583	436	420
Starvation Cap Reductn	0	0	0	0	0	0	0	0
Spillback Cap Reductn	0	0	0	0	0	0	0	0
Storage Cap Reductn	0	0	0	0	0	0	0	0
Reduced v/c Ratio	0.03	0.31	0.04	0.30	0.14	0.01	0.34	0.01

Intersection Summary

Lane Group	EBL	EBT	EBR	WBL	WBT	WBR	NBT	SBT
Lane Group Flow (vph)	1	437	49	65	1405	5	132	15
v/c Ratio	0.01	0.31	0.07	0.27	0.73	0.01	0.47	0.05
Control Delay	39.0	14.7	4.5	34.3	13.3	6.4	26.8	25.4
Queue Delay	0.0	0.0	0.0	0.0	0.0	0.0	0.0	0.0
Total Delay	39.0	14.7	4.5	34.3	13.3	6.4	26.8	25.4
Queue Length 50th (ft)	0	61	0	21	159	0	27	3
Queue Length 95th (ft)	7	112	18	84	421	6	114	25
Internal Link Dist (ft)		2435			7494		227	1669
Turn Bay Length (ft)	150		190	120		120		
Base Capacity (vph)	447	3505	1583	447	3343	1583	560	615
Starvation Cap Reductn	0	0	0	0	0	0	0	0
Spillback Cap Reductn	0	0	0	0	0	0	0	0
Storage Cap Reductn	0	0	0	0	0	0	0	0
Reduced v/c Ratio	0.00	0.12	0.03	0.15	0.42	0.00	0.24	0.02

Intersection Summary

Lane Group	EBL	EBT	EBR	WBL	WBT	WBR	NBT	SBT
Lane Group Flow (vph)	11	1093	54	66	476	13	132	6
v/c Ratio	0.07	0.67	0.07	0.30	0.24	0.01	0.51	0.03
Control Delay	38.2	18.4	4.4	37.7	7.6	4.6	33.9	30.8
Queue Delay	0.0	0.0	0.0	0.0	0.0	0.0	0.0	0.0
Total Delay	38.2	18.4	4.4	37.7	7.6	4.6	33.9	30.8
Queue Length 50th (ft)	5	198	1	28	38	0	44	2
Queue Length 95th (ft)	23	318	20	76	108	9	114	14
Internal Link Dist (ft)		2435			7494		227	1669
Turn Bay Length (ft)	150		190	120		120		
Base Capacity (vph)	373	3505	1583	373	3343	1583	493	444
Starvation Cap Reductn	0	0	0	0	0	0	0	0
Spillback Cap Reductn	0	0	0	0	0	0	0	0
Storage Cap Reductn	0	0	0	0	0	0	0	0
Reduced v/c Ratio	0.03	0.31	0.03	0.18	0.14	0.01	0.27	0.01

Intersection Summary

Lane Group	EBL	EBT	EBR	WBL	WBT	WBR	NBT	SBT
Lane Group Flow (vph)	1	437	47	55	1405	5	109	15
v/c Ratio	0.01	0.27	0.06	0.23	0.73	0.01	0.42	0.06
Control Delay	38.0	12.4	4.2	33.5	12.8	6.0	26.1	25.6
Queue Delay	0.0	0.0	0.0	0.0	0.0	0.0	0.0	0.0
Total Delay	38.0	12.4	4.2	33.5	12.8	6.0	26.1	25.6
Queue Length 50th (ft)	0	58	0	17	151	0	21	3
Queue Length 95th (ft)	6	105	17	73	403	6	97	25
Internal Link Dist (ft)		2435			7494		227	1669
Turn Bay Length (ft)	150		190	120		120		
Base Capacity (vph)	462	3505	1583	462	3343	1583	564	635
Starvation Cap Reductn	0	0	0	0	0	0	0	0
Spillback Cap Reductn	0	0	0	0	0	0	0	0
Storage Cap Reductn	0	0	0	0	0	0	0	0
Reduced v/c Ratio	0.00	0.12	0.03	0.12	0.42	0.00	0.19	0.02

Intersection Summary

Lane Group	EBL	EBT	EBR	WBL	WBT	WBR	NBT	SBT
Lane Group Flow (vph)	17	1388	25	55	422	15	106	8
v/c Ratio	0.11	0.75	0.03	0.29	0.20	0.02	0.48	0.04
Control Delay	45.7	18.5	5.6	45.1	7.9	4.3	40.0	38.9
Queue Delay	0.0	0.0	0.0	0.0	0.0	0.0	0.0	0.0
Total Delay	45.7	18.5	5.6	45.1	7.9	4.3	40.0	38.9
Queue Length 50th (ft)	9	284	1	28	33	0	42	4
Queue Length 95th (ft)	35	443	14	78	95	9	113	20
Internal Link Dist (ft)		2435			7494		227	1669
Turn Bay Length (ft)	150		190	120		120		
Base Capacity (vph)	339	3505	1524	336	3343	1583	449	421
Starvation Cap Reductn	0	0	0	0	0	0	0	0
Spillback Cap Reductn	0	0	0	0	0	0	0	0
Storage Cap Reductn	0	0	0	0	0	0	0	0
Reduced v/c Ratio	0.05	0.40	0.02	0.16	0.13	0.01	0.24	0.02

Intersection Summary

Lane Group	EBL	EBT	EBR	WBL	WBT	WBR	NBT	SBT
Lane Group Flow (vph)	5	473	35	43	924	2	73	6
v/c Ratio	0.02	0.34	0.05	0.15	0.60	0.00	0.27	0.02
Control Delay	23.8	11.5	5.4	22.3	11.1	6.5	15.4	19.5
Queue Delay	0.0	0.0	0.0	0.0	0.0	0.0	0.0	0.0
Total Delay	23.8	11.5	5.4	22.3	11.1	6.5	15.4	19.5
Queue Length 50th (ft)	1	28	0	8	67	0	6	1
Queue Length 95th (ft)	11	98	14	43	199	3	46	11
Internal Link Dist (ft)		2435			7494		227	1669
Turn Bay Length (ft)	150		190	120		120		
Base Capacity (vph)	643	3505	1583	636	3343	1583	775	838
Starvation Cap Reductn	0	0	0	0	0	0	0	0
Spillback Cap Reductn	0	0	0	0	0	0	0	0
Storage Cap Reductn	0	0	0	0	0	0	0	0
Reduced v/c Ratio	0.01	0.13	0.02	0.07	0.28	0.00	0.09	0.01

Intersection Summary

Lane Group	EBL	EBT	EBR	WBL	WBT	WBR	NBT	SBT
Lane Group Flow (vph)	17	1388	24	48	422	15	102	8
v/c Ratio	0.11	0.75	0.03	0.26	0.21	0.02	0.47	0.04
Control Delay	45.1	18.2	5.6	44.5	7.9	4.4	39.8	38.6
Queue Delay	0.0	0.0	0.0	0.0	0.0	0.0	0.0	0.0
Total Delay	45.1	18.2	5.6	44.5	7.9	4.4	39.8	38.6
Queue Length 50th (ft)	8	280	1	24	32	0	40	4
Queue Length 95th (ft)	35	434	14	70	94	9	110	20
Internal Link Dist (ft)		2435			7494		227	1669
Turn Bay Length (ft)	150		190	120		120		
Base Capacity (vph)	343	3505	1524	343	3343	1583	448	389
Starvation Cap Reductn	0	0	0	0	0	0	0	0
Spillback Cap Reductn	0	0	0	0	0	0	0	0
Storage Cap Reductn	0	0	0	0	0	0	0	0
Reduced v/c Ratio	0.05	0.40	0.02	0.14	0.13	0.01	0.23	0.02

Intersection Summary

Lane Group	EBL	EBT	EBR	WBL	WBT	WBR	NBT	SBT
Lane Group Flow (vph)	5	473	34	40	924	2	65	6
v/c Ratio	0.02	0.34	0.05	0.14	0.60	0.00	0.25	0.02
Control Delay	23.6	11.5	5.4	22.2	11.1	6.5	15.6	19.5
Queue Delay	0.0	0.0	0.0	0.0	0.0	0.0	0.0	0.0
Total Delay	23.6	11.5	5.4	22.2	11.1	6.5	15.6	19.5
Queue Length 50th (ft)	1	28	0	7	66	0	5	1
Queue Length 95th (ft)	11	97	14	40	198	3	43	11
Internal Link Dist (ft)		2435			7494		227	1669
Turn Bay Length (ft)	150		190	120		120		
Base Capacity (vph)	645	3505	1583	645	3343	1583	752	842
Starvation Cap Reductn	0	0	0	0	0	0	0	0
Spillback Cap Reductn	0	0	0	0	0	0	0	0
Storage Cap Reductn	0	0	0	0	0	0	0	0
Reduced v/c Ratio	0.01	0.13	0.02	0.06	0.28	0.00	0.09	0.01

Intersection Summary

Lane Group	EBL	EBT	EBR	WBL	WBT	WBR	NBT	SBT
Lane Group Flow (vph)	11	1093	60	96	476	13	149	6
v/c Ratio	0.08	0.72	0.09	0.41	0.23	0.01	0.57	0.02
Control Delay	40.7	21.9	4.7	40.3	7.7	4.7	35.7	31.7
Queue Delay	0.0	0.0	0.0	0.0	0.0	0.0	0.0	0.0
Total Delay	40.7	21.9	4.7	40.3	7.7	4.7	35.7	31.7
Queue Length 50th (ft)	5	222	1	45	42	0	56	3
Queue Length 95th (ft)	24	344	22	104	111	9	129	15
Internal Link Dist (ft)		2435			7494		227	1669
Turn Bay Length (ft)	150		190	120		120		
Base Capacity (vph)	323	3505	1553	317	3343	1583	430	418
Starvation Cap Reductn	0	0	0	0	0	0	0	0
Spillback Cap Reductn	0	0	0	0	0	0	0	0
Storage Cap Reductn	0	0	0	0	0	0	0	0
Reduced v/c Ratio	0.03	0.31	0.04	0.30	0.14	0.01	0.35	0.01

Intersection Summary

Lane Group	EBL	EBT	EBR	WBL	WBT	WBR	NBT	SBT
Lane Group Flow (vph)	1	437	49	65	1405	5	132	15
v/c Ratio	0.01	0.31	0.07	0.27	0.73	0.01	0.47	0.05
Control Delay	39.0	14.8	4.5	34.6	13.4	6.6	27.2	25.4
Queue Delay	0.0	0.0	0.0	0.0	0.0	0.0	0.0	0.0
Total Delay	39.0	14.8	4.5	34.6	13.4	6.6	27.2	25.4
Queue Length 50th (ft)	0	61	0	21	160	0	28	3
Queue Length 95th (ft)	7	113	18	83	426	6	114	25
Internal Link Dist (ft)		2435			7494		227	1669
Turn Bay Length (ft)	150		190	120		120		
Base Capacity (vph)	445	3505	1553	436	3343	1583	539	612
Starvation Cap Reductn	0	0	0	0	0	0	0	0
Spillback Cap Reductn	0	0	0	0	0	0	0	0
Storage Cap Reductn	0	0	0	0	0	0	0	0
Reduced v/c Ratio	0.00	0.12	0.03	0.15	0.42	0.00	0.24	0.02

Intersection Summary

Lane Group	EBL	EBT	EBR	WBL	WBT	WBR	NBT	SBT
Lane Group Flow (vph)	11	1093	54	66	476	13	132	6
v/c Ratio	0.07	0.67	0.07	0.31	0.24	0.01	0.51	0.03
Control Delay	38.3	18.4	4.5	37.9	7.6	4.6	34.0	30.8
Queue Delay	0.0	0.0	0.0	0.0	0.0	0.0	0.0	0.0
Total Delay	38.3	18.4	4.5	37.9	7.6	4.6	34.0	30.8
Queue Length 50th (ft)	5	200	1	28	38	0	45	2
Queue Length 95th (ft)	23	320	20	76	108	9	114	14
Internal Link Dist (ft)		2435			7494		227	1669
Turn Bay Length (ft)	150		190	120		120		
Base Capacity (vph)	372	3505	1538	365	3343	1583	488	433
Starvation Cap Reductn	0	0	0	0	0	0	0	0
Spillback Cap Reductn	0	0	0	0	0	0	0	0
Storage Cap Reductn	0	0	0	0	0	0	0	0
Reduced v/c Ratio	0.03	0.31	0.04	0.18	0.14	0.01	0.27	0.01

Intersection Summary

Lane Group	EBL	EBT	EBR	WBL	WBT	WBR	NBT	SBT
Lane Group Flow (vph)	1	437	47	55	1405	5	109	15
v/c Ratio	0.01	0.27	0.06	0.23	0.73	0.01	0.42	0.05
Control Delay	38.0	12.5	4.3	33.6	12.9	6.2	26.4	25.5
Queue Delay	0.0	0.0	0.0	0.0	0.0	0.0	0.0	0.0
Total Delay	38.0	12.5	4.3	33.6	12.9	6.2	26.4	25.5
Queue Length 50th (ft)	0	58	0	17	153	0	22	3
Queue Length 95th (ft)	6	106	17	73	406	6	97	25
Internal Link Dist (ft)		2435			7494		227	1669
Turn Bay Length (ft)	150		190	120		120		
Base Capacity (vph)	460	3505	1553	460	3343	1583	547	633
Starvation Cap Reductn	0	0	0	0	0	0	0	0
Spillback Cap Reductn	0	0	0	0	0	0	0	0
Storage Cap Reductn	0	0	0	0	0	0	0	0
Reduced v/c Ratio	0.00	0.12	0.03	0.12	0.42	0.00	0.20	0.02

Intersection Summary

Lane Group	EBL	EBT	EBR	WBL	WBT	WBR	NBT	SBT
Lane Group Flow (vph)	17	1388	25	55	422	15	106	8
v/c Ratio	0.11	0.75	0.03	0.29	0.20	0.02	0.48	0.04
Control Delay	45.6	18.4	5.6	44.9	7.8	4.4	39.8	38.9
Queue Delay	0.0	0.0	0.0	0.0	0.0	0.0	0.0	0.0
Total Delay	45.6	18.4	5.6	44.9	7.8	4.4	39.8	38.9
Queue Length 50th (ft)	9	283	1	27	32	0	42	4
Queue Length 95th (ft)	35	441	14	78	94	9	113	20
Internal Link Dist (ft)		2435			7494		227	1669
Turn Bay Length (ft)	150		190	120		120		
Base Capacity (vph)	340	3505	1583	337	3343	1583	456	426
Starvation Cap Reductn	0	0	0	0	0	0	0	0
Spillback Cap Reductn	0	0	0	0	0	0	0	0
Storage Cap Reductn	0	0	0	0	0	0	0	0
Reduced v/c Ratio	0.05	0.40	0.02	0.16	0.13	0.01	0.23	0.02

Intersection Summary

Lane Group	EBL	EBT	EBR	WBL	WBT	WBR	NBT	SBT
Lane Group Flow (vph)	5	473	35	43	924	2	73	6
v/c Ratio	0.02	0.34	0.05	0.15	0.60	0.00	0.27	0.02
Control Delay	23.8	11.5	5.4	22.3	11.1	6.5	15.4	19.5
Queue Delay	0.0	0.0	0.0	0.0	0.0	0.0	0.0	0.0
Total Delay	23.8	11.5	5.4	22.3	11.1	6.5	15.4	19.5
Queue Length 50th (ft)	1	28	0	8	67	0	6	1
Queue Length 95th (ft)	11	98	14	43	199	3	46	11
Internal Link Dist (ft)		2435			7494		227	1669
Turn Bay Length (ft)	150		190	120		120		
Base Capacity (vph)	643	3505	1583	643	3343	1583	775	838
Starvation Cap Reductn	0	0	0	0	0	0	0	0
Spillback Cap Reductn	0	0	0	0	0	0	0	0
Storage Cap Reductn	0	0	0	0	0	0	0	0
Reduced v/c Ratio	0.01	0.13	0.02	0.07	0.28	0.00	0.09	0.01

Intersection Summary

Lane Group	EBL	EBT	EBR	WBL	WBT	WBR	NBT	SBT
Lane Group Flow (vph)	17	1388	24	48	422	15	102	8
v/c Ratio	0.11	0.75	0.03	0.26	0.21	0.02	0.46	0.04
Control Delay	45.0	18.2	5.6	44.5	7.8	4.4	39.6	38.7
Queue Delay	0.0	0.0	0.0	0.0	0.0	0.0	0.0	0.0
Total Delay	45.0	18.2	5.6	44.5	7.8	4.4	39.6	38.7
Queue Length 50th (ft)	8	280	1	24	32	0	40	4
Queue Length 95th (ft)	35	433	14	70	94	9	110	20
Internal Link Dist (ft)		2435			7494		227	1669
Turn Bay Length (ft)	150		190	120		120		
Base Capacity (vph)	343	3505	1524	336	3343	1583	457	399
Starvation Cap Reductn	0	0	0	0	0	0	0	0
Spillback Cap Reductn	0	0	0	0	0	0	0	0
Storage Cap Reductn	0	0	0	0	0	0	0	0
Reduced v/c Ratio	0.05	0.40	0.02	0.14	0.13	0.01	0.22	0.02

Intersection Summary

Lane Group	EBL	EBT	EBR	WBL	WBT	WBR	NBT	SBT
Lane Group Flow (vph)	5	473	34	40	924	2	65	6
v/c Ratio	0.02	0.34	0.05	0.14	0.60	0.00	0.25	0.02
Control Delay	23.6	11.5	5.4	22.2	11.1	6.5	15.6	19.5
Queue Delay	0.0	0.0	0.0	0.0	0.0	0.0	0.0	0.0
Total Delay	23.6	11.5	5.4	22.2	11.1	6.5	15.6	19.5
Queue Length 50th (ft)	1	28	0	7	66	0	5	1
Queue Length 95th (ft)	11	97	14	40	198	3	43	11
Internal Link Dist (ft)		2435			7494		227	1669
Turn Bay Length (ft)	150		190	120		120		
Base Capacity (vph)	645	3505	1583	645	3343	1583	752	842
Starvation Cap Reductn	0	0	0	0	0	0	0	0
Spillback Cap Reductn	0	0	0	0	0	0	0	0
Storage Cap Reductn	0	0	0	0	0	0	0	0
Reduced v/c Ratio	0.01	0.13	0.02	0.06	0.28	0.00	0.09	0.01

Intersection Summary

Lane Group	EBL	EBT	EBR	WBL	WBT	WBR	NBT	SBT
Lane Group Flow (vph)	12	1566	61	118	711	15	155	6
v/c Ratio	0.11	0.82	0.07	0.56	0.30	0.01	0.66	0.03
Control Delay	58.9	24.8	5.7	60.9	7.1	3.4	52.9	46.2
Queue Delay	0.0	0.0	0.0	0.0	0.0	0.0	0.0	0.0
Total Delay	58.9	24.8	5.7	60.9	7.1	3.4	52.9	46.2
Queue Length 50th (ft)	8	460	6	80	77	0	86	4
Queue Length 95th (ft)	32	613	27	#176	181	9	181	18
Internal Link Dist (ft)		2435			7494		227	1669
Turn Bay Length (ft)	150		190	120		120		
Base Capacity (vph)	234	3449	1559	234	3290	1558	323	291
Starvation Cap Reductn	0	0	0	0	0	0	0	0
Spillback Cap Reductn	0	0	0	0	0	0	0	0
Storage Cap Reductn	0	0	0	0	0	0	0	0
Reduced v/c Ratio	0.05	0.45	0.04	0.50	0.22	0.01	0.48	0.02

Intersection Summary

95th percentile volume exceeds capacity, queue may be longer.
Queue shown is maximum after two cycles.

Lane Group	EBL	EBT	EBR	WBL	WBT	WBR	NBT	SBT
Lane Group Flow (vph)	1	767	49	66	1963	5	133	16
v/c Ratio	0.01	0.38	0.05	0.35	0.85	0.00	0.55	0.07
Control Delay	67.0	13.3	2.9	58.1	16.0	4.8	42.9	42.7
Queue Delay	0.0	0.0	0.0	0.0	0.0	0.0	0.0	0.0
Total Delay	67.0	13.3	2.9	58.1	16.0	4.8	42.9	42.7
Queue Length 50th (ft)	1	144	0	36	388	1	46	6
Queue Length 95th (ft)	9	218	16	127	834	5	173	37
Internal Link Dist (ft)		2435			7494		227	1669
Turn Bay Length (ft)	150		190	120		120		
Base Capacity (vph)	293	3308	1497	293	3155	1494	383	409
Starvation Cap Reductn	0	0	0	0	0	0	0	0
Spillback Cap Reductn	0	0	0	0	0	0	0	0
Storage Cap Reductn	0	0	0	0	0	0	0	0
Reduced v/c Ratio	0.00	0.23	0.03	0.23	0.62	0.00	0.35	0.04

Intersection Summary

Lane Group	EBL	EBT	EBR	WBL	WBT	WBR	NBT	SBT
Lane Group Flow (vph)	12	1566	55	89	711	15	137	6
v/c Ratio	0.11	0.81	0.06	0.48	0.30	0.01	0.62	0.03
Control Delay	57.3	22.8	5.6	58.6	6.9	3.4	50.4	45.8
Queue Delay	0.0	0.0	0.0	0.0	0.0	0.0	0.0	0.0
Total Delay	57.3	22.8	5.6	58.6	6.9	3.4	50.4	45.8
Queue Length 50th (ft)	8	410	5	57	71	0	71	4
Queue Length 95th (ft)	32	613	25	132	181	9	160	18
Internal Link Dist (ft)		2435			7494		227	1669
Turn Bay Length (ft)	150		190	120		120		
Base Capacity (vph)	249	3454	1561	249	3294	1560	338	315
Starvation Cap Reductn	0	0	0	0	0	0	0	0
Spillback Cap Reductn	0	0	0	0	0	0	0	0
Storage Cap Reductn	0	0	0	0	0	0	0	0
Reduced v/c Ratio	0.05	0.45	0.04	0.36	0.22	0.01	0.41	0.02

Intersection Summary

Lane Group	EBL	EBT	EBR	WBL	WBT	WBR	NBT	SBT
Lane Group Flow (vph)	1	767	47	57	1963	5	111	16
v/c Ratio	0.01	0.38	0.05	0.30	0.84	0.00	0.49	0.07
Control Delay	65.0	12.8	2.9	56.5	15.5	4.6	42.0	42.9
Queue Delay	0.0	0.0	0.0	0.0	0.0	0.0	0.0	0.0
Total Delay	65.0	12.8	2.9	56.5	15.5	4.6	42.0	42.9
Queue Length 50th (ft)	1	136	0	30	362	1	37	5
Queue Length 95th (ft)	9	216	15	114	831	5	149	37
Internal Link Dist (ft)		2435			7494		227	1669
Turn Bay Length (ft)	150		190	120		120		
Base Capacity (vph)	304	3309	1497	304	3156	1494	386	423
Starvation Cap Reductn	0	0	0	0	0	0	0	0
Spillback Cap Reductn	0	0	0	0	0	0	0	0
Storage Cap Reductn	0	0	0	0	0	0	0	0
Reduced v/c Ratio	0.00	0.23	0.03	0.19	0.62	0.00	0.29	0.04

Intersection Summary

Lane Group	EBL	EBT	EBR	WBL	WBT	WBR	NBT	SBT
Lane Group Flow (vph)	18	1873	25	57	642	16	109	8
v/c Ratio	0.16	0.83	0.03	0.38	0.27	0.01	0.57	0.05
Control Delay	71.5	20.6	5.2	71.3	6.8	3.0	62.3	62.3
Queue Delay	0.0	0.0	0.0	0.0	0.0	0.0	0.0	0.0
Total Delay	71.5	20.6	5.2	71.3	6.8	3.0	62.3	62.3
Queue Length 50th (ft)	13	550	3	42	60	0	64	6
Queue Length 95th (ft)	51	824	15	120	160	8	173	28
Internal Link Dist (ft)		2435			7494		227	1669
Turn Bay Length (ft)	150		190	120		120		
Base Capacity (vph)	243	3216	1412	240	3084	1461	332	298
Starvation Cap Reductn	0	0	0	0	0	0	0	0
Spillback Cap Reductn	0	0	0	0	0	0	0	0
Storage Cap Reductn	0	0	0	0	0	0	0	0
Reduced v/c Ratio	0.07	0.58	0.02	0.24	0.21	0.01	0.33	0.03

Intersection Summary

Lane Group	EBL	EBT	EBR	WBL	WBT	WBR	NBT	SBT
Lane Group Flow (vph)	5	777	36	46	1390	2	73	7
v/c Ratio	0.03	0.47	0.05	0.19	0.71	0.00	0.32	0.03
Control Delay	33.6	12.9	4.2	31.1	11.5	5.5	20.9	27.2
Queue Delay	0.0	0.0	0.0	0.0	0.0	0.0	0.0	0.0
Total Delay	33.6	12.9	4.2	31.1	11.5	5.5	20.9	27.2
Queue Length 50th (ft)	2	106	0	14	131	0	10	2
Queue Length 95th (ft)	14	175	13	60	363	3	59	16
Internal Link Dist (ft)		2435			7494		227	1669
Turn Bay Length (ft)	150		190	120		120		
Base Capacity (vph)	489	3505	1583	489	3343	1583	607	650
Starvation Cap Reductn	0	0	0	0	0	0	0	0
Spillback Cap Reductn	0	0	0	0	0	0	0	0
Storage Cap Reductn	0	0	0	0	0	0	0	0
Reduced v/c Ratio	0.01	0.22	0.02	0.09	0.42	0.00	0.12	0.01

Intersection Summary

Lane Group	EBL	EBT	EBR	WBL	WBT	WBR	NBT	SBT
Lane Group Flow (vph)	18	1873	24	49	642	16	105	8
v/c Ratio	0.16	0.83	0.02	0.34	0.27	0.01	0.55	0.05
Control Delay	70.7	20.3	5.3	70.0	6.8	3.0	61.5	61.7
Queue Delay	0.0	0.0	0.0	0.0	0.0	0.0	0.0	0.0
Total Delay	70.7	20.3	5.3	70.0	6.8	3.0	61.5	61.7
Queue Length 50th (ft)	13	536	3	35	59	0	61	6
Queue Length 95th (ft)	51	824	15	105	160	8	168	28
Internal Link Dist (ft)		2435			7494		227	1669
Turn Bay Length (ft)	150		190	120		120		
Base Capacity (vph)	246	3231	1406	241	3098	1468	335	305
Starvation Cap Reductn	0	0	0	0	0	0	0	0
Spillback Cap Reductn	0	0	0	0	0	0	0	0
Storage Cap Reductn	0	0	0	0	0	0	0	0
Reduced v/c Ratio	0.07	0.58	0.02	0.20	0.21	0.01	0.31	0.03

Intersection Summary

Lane Group	EBL	EBT	EBR	WBL	WBT	WBR	NBT	SBT
Lane Group Flow (vph)	5	777	35	42	1390	2	65	7
v/c Ratio	0.03	0.47	0.05	0.18	0.71	0.00	0.30	0.03
Control Delay	33.4	12.7	4.2	31.0	11.5	5.5	21.2	27.2
Queue Delay	0.0	0.0	0.0	0.0	0.0	0.0	0.0	0.0
Total Delay	33.4	12.7	4.2	31.0	11.5	5.5	21.2	27.2
Queue Length 50th (ft)	2	105	0	12	130	0	9	2
Queue Length 95th (ft)	14	173	13	55	362	3	55	16
Internal Link Dist (ft)		2435			7494		227	1669
Turn Bay Length (ft)	150		190	120		120		
Base Capacity (vph)	492	3505	1583	492	3343	1583	583	654
Starvation Cap Reductn	0	0	0	0	0	0	0	0
Spillback Cap Reductn	0	0	0	0	0	0	0	0
Storage Cap Reductn	0	0	0	0	0	0	0	0
Reduced v/c Ratio	0.01	0.22	0.02	0.09	0.42	0.00	0.11	0.01

Intersection Summary

APPENDIX S

HEAVY VEHICLE PERCENTAGE AT SITE ENTRANCES

APPENDIX T

TRANSPORTATION PROFFERS FOR APPROVED DEVELOPMENT-KIRKPATRICK FARMS, AND,

TRAFFIC SIGNAL DESIGN AT BRADDOCK ROAD AND GUM SPRING ROAD

DEPARTMENT OF PLANNING
750 MILLER DRIVE S.E.
LEESBURG, VIRGINIA 22075
(703) 777-0246

NOTIFICATION OF FINAL ACTION ON LAND DEVELOPMENT APPLICATION

DATE: 8/21/97

PROJECT PLANNER: WANDA S SUDER

APPLICATION: ZMAP-1995-0014
KIRKPATRICK FARMS

PROPOSAL: APPROVAL TO REZONE 405 ACRES FROM A3 & CR1 TO PDH4 TO ALLOW UP TO 1224 MARKET RATE DWELLINGS (786 SFD, 262 SFA, 176 MF), 161 AFFORDABLE DWELLINGS (121 SFA, 40 MF) AND UP TO 25,000 SF RETAIL, WITH ZONING MODIFICATIONS

TAX MAP NUMBERS: 105////////15/ 105////////19A

APPROVED ZONING: PDH4

SPECIAL DISTRICTS:

RELATED CASES: CMPT-1991-0006 SBWV-1991-0051 SPEX-1991-0039

PROJECT ACREAGE: 405.05

FINAL ACTION: APPROVED FINAL ACTION DATE: 07/02/1997

FINAL ACTION BY: BOARD OF SUPERVISORS

Loudoun County, Virginia
Office of the County Administrator
1 Harrison Street, S.E., 5th Floor, P.O. Box 7000, Leesburg, VA 20177-7000
703/777-0200 - Metro: 703/478-8439 - Fax: 703/777-0320

At a meeting of the Board of Supervisors of Loudoun County, Virginia, held in the County Government Center, Board of Supervisors' Meeting Room, 1 Harrison Street, S.E., Leesburg, Virginia, on Wednesday, July 2, 1997 at 9:00 a.m.

PRESENT: Dale Polen Myers, Chairman
Joan G. Rokus, Vice Chairman
Lawrence S. Beerman II
James G. Burton
Helen A. Marcum
David G. McWatters
Eleanore C. Towe
Scott K. York
Steven D. Whitener

IN RE: ZONING MAP 1995-0014, KIRKPATRICK FARMS (MERCER DISTRICT)

Mr. Whitener moved to approve Zoning Map 1995-0014, Kirkpatrick Farms, subject to the proffer statement dated March 17, 1997, and letter of proffer clarification dated July 2, 1997, and the Concept Development Plan prepared by Huntley, Nyce & Associates, Ltd., dated September 1, 1995 and revised through June 12, 1997, which include the Alternative Concept Development Plan dated April 16, 1997, and revised through June 12, 1997, and the modifications to the Zoning Ordinance and the Facilities Standards Manual to permit pipestem lots.

Seconded by Mrs. Marcum.

Voting on the Motion: Supervisors Myers, Beerman, Marcum, Rokus and Whitener - Yes; Burton, McWatters, Towe and York - No.

A COPY TESTE:

Signature
DEPUTY CLERK FOR THE LOUDOUN COUNTY
BOARD OF SUPERVISORS

PLM:REJUL2A.97

b) under 1, 169 unit scenario (without ADU's):

Total Contribution: $1,076,810
Per Unit Contribution: $921.18

6. HIGHER AND LOWER DENSITY SCENARIOS - OPEN SPACE CONTRIBUTION: Section VI. of the Proffer Statement is hereby clarified and amended in part to provide for the following open space capital contributions in lieu of those provided for therein:

a) under 1,385 unit scenario (with ADU's):

Total Contribution: $584,000
Credit for Trail System: $130,000
Per Unit Contribution: $327.80

b) under 1,169 unit scenario (without ADU's):

Total Contribution: $364,000
Credit for Trail System: $130, 000
Per Unit Contribution: $200.17

7. CIVIL WAR GRAVE SITE BUFFER: Section I. of' the Proffer Statement is hereby clarified and amended by adding the following language after that set out in paragraph 2 of this Letter of Proffer Clarification:

"The Applicant will so develop the Property as to preserve a buffer of at least twenty-five feet (25') around the perimeter of any cemetery site on the Property containing the remains of Civil War military personnel, and *the Applicant will provide access for the public to such cemetery site without the necessity of crossing private property. Nothing provided in this paragraph shall require the Applicant to provide such buffer and/or such public access if to do so would require violating the legal rights of any party, including, without limitation thereby, the legal rights of Loudoun County, the Virginia Department of Transportation, or Consolidated Natural Gas Corporation."*

8. ROUTE 659 IMPROVEMENT SOUTH OF PROJECT ENTRANCE: Section II.B.2.b.1. (p. 12) of the Proffer Statement is hereby clarified and amended by adding the following new paragraph:

"The construction and right-of-way dedication necessary for two additional lanes to existing Route 659 from Route 620 to the site entrance of Pebble Drive. The existing two lanes shall be improved to VDOT standards for a

four-lane divided major collector facility. The Applicant projects that at full buildout of development on the Property, traffic generated by the Project will be seventeen percent (17%) of all the traffic on said link. Therefore, the Applicant will, at anytime after the issuance of first zoning permit for first residential or retail development in Phase II, request that the County reimburse the Applicant from regional roadway contribution funds, or cash in lieu of construction funds, contributed to the County by the owners or developers of property having frontage either on Route 620 between the eastern boundary of the Applicant's property and Route 659 or on Route 659 between Route 620 and the southern boundary of Stone Ridge, provided the Applicant itself has improved the frontage of said property of others pursuant to the Applicant's off-site road construction proffers. Such reimbursement shall be at the discretion of the County. The sum total of such Applicant reimbursement shall not exceed eighty-three percent (83%) of the actual cost of the construction of such link or portion thereof. The Applicant shall not be required to construct any portion of such link, or make any payment of cash in lieu of construction for any portion of said link, constructed by others prior to issuance of first zoning permit for development in Phase II."

9. LIGHTING OF BALLFIELD: Section I. of the Proffer Statement is hereby clarified and amended by adding the following language to the end of the second full paragraph on page 3:

"Said ballfields shall be equipped with lights appropriate for night play. The Applicant shall, within a reasonable time period after being requested by the County, install such lighting, at the Applicant's expense, on whichever of the two ball fields is designated by the County to be so improved. The lighting on the remaining ballfield shall be done at the expense of others. In connection with this paragraph 3, if the County determines that a Special Exception is necessary to achieve the proffered result, the Applicant will file an application for such Special Exception, within twelve (12) months of the date of County approval of ZMAP 1995-0014, and shall process said application at the Applicant's expense, provided that the Applicant shall request that the County, in the County's discretion, shall waive its filing fee for such application. If the County does not approve such Special Exception, the Applicant shall not be required to provide lighting in accordance with this proffer."

10. LOWER DENSITY SCENARIO DOUBLE FRONTAGE: Section II.B.2.b.3. (pages 13 and 14) of the Proffer Statement is hereby clarified and amended by adding the following language.

KIRKPATRICK FARMS
REZONING APPLICATION NO. 1995-0014

INDEX

I. CONCEPT DEVELOPMENT PLAN 1

Phase I 3
Phase II 4
Phase III.....7
General 8

II. TRANSPORTATION.....……. 9

A. Internal Road Network.....…….. 9
B. Phasing of Development .....….10
C. Signalization .....……..…….17
D. Western Transportation Corridor/Route 659 Rel…….18
E. Acquisition of Off-Site Right-of-Way/Easements……...20
F. Cash Equivalent Contribution……..22
G. Emergency Access……23
H. Construction Traffic…….24

III. CAPITAL FACILITIES 24

A. Elementary School Site.....24
B. Parks and Recreation.....27
C. Cash Contribution for Capital Facilities.....28

IV. EMERGENCY SERVICES……29

A. Applicant Contribution……..29
B. Annual Contribution……..30
C. Sprinkler System……31
D. Fire Alarms……32
E. Access During Construction ……32

V. OWNERS' ASSOCIATION……..32

VI. OPEN SPACE……33

A. Open Space Proffers……33

VII. MISCELLANEOUS……34

A. Consumer Price Index…….35

facilities as needed, provided that such cooperative efforts are in accordance with LCSA practice and policies.

II. TRANSPORTATION:

A. Internal Road Network.

Unless otherwise specified in the Proffers, all roads on the Property will be constructed in accordance with the County of Loudoun's Land Subdivision and Development Ordinance and Facilities Standards Manual to provide access to the internal parcels as they are developed except those roads for which a request for modification has been granted by the Board of Supervisors. All roads built on the Property will be designed and constructed in accordance with Virginia Department of Transportation ("VDOT") and County standards or, if approved, with modified standards.

Dedication of land shall include related easements outside the right-of-way, such as slope, maintenance, storm drainage and utility relocation easements, necessary to construct public roads and streets within the Property. Dedication of right-of-way and easements shall occur upon request by the County in advance of development on the Property by the Applicant, if others have prepared construction plans and profiles consistent with the Concept Development Plan and require dedication to commence construction, and provided that the Applicant shall not be

obligated to incur costs or post bonds with the County in connection with such dedication.

B. Phasing of Development.

The Project will be built in three (3) Phases as specified on the CDP at Sheet 6 of 8. The Applicant shall make frontage and other off-site roadway improvements in each Phase according to the schedule set forth immediately hereinafter. All such improvements shall be made to standards reasonably required by the Virginia Department of Transportation (VDOT) and the Countrywide Transportation Plan except where a modification has been granted by the County.

i. Phase I (Land Bays A, B, C, D, H and I) - Prior to issuance of any zoning permits for development associated with Phase I of the Project, the Applicant will construct or bond for construction the following transportation improvements:

a. Frontage Improvements.

1. At the site entrance for the Project (Pebble Drive) on existing Route 659, left and right turn lanes on existing Route 659 and a transition for a northbound left turn lane on existing Route 659. (Illustrated in Figure 1 attached hereto and made a part hereof as Exhibit B.)

2. The frontage section of the Property on existing Route 659 reconstructed to locate the ultimate western curb to support half section of a four-

lane divided major collector. (Illustrated in Figure 1 attached hereto.)

b. External, Non-Frontage Improvements.

A northbound right turn lane on existing Route 659 at Route 50.

c. Dedication of Rights-of-Way.

The Applicant shall dedicate to the County the following right-of-way in order to accommodate Phase I construction:

- a right-of-way sixty feet (60) from the Ultimate Center Line of Route 659 across the frontage of the Property on Route 659. Such dedication shall be at no cost to the County or to VDOT, and shall be provided earlier then as set forth above if requested by the County or VDOT.

2. Phase II (Land Bays F, G, 3 acre commercial/retail, J, K, L, M, O and Q1/Q2) - Prior to issuance of any zoning Permits for development associated with Phase II, the Applicant will construct or bond for construction the following transportation improvements:

a. Frontage Improvements.

1. Left and right turn lanes for both the north and south sides of Route 620, at the eastern site entrance to the Property on Route 620.

2. A half section of a four-lane divided major collector on

Route 620 from the point of intersection at the eastern site entrance of the Property to the

eastern boundary of the Property (approximately 1000 linear feet).

b. External, Non-Frontage Improvements.

1. Two additional lanes to existing Route 659 from the northern boundary of the Property approximately 2700 linear feet to the southern property line of Stone Ridge (Tax Map 100, Parcel 44) that abuts existing Route 659 (approximately 2700 linear feet). The existing two lanes shall become the northbound lanes of the four-lane divided facility and shall be improved to VDOT standards, with the Applicant dedicating right-of-way for and constructing an additional two lanes west of the existing lanes to become the ultimate southbound lanes. Location of two lane improvements may vary subject to final engineering and right-of-way acquisition, but must all lie on the same side of the Ultimate Center Line.

2. Two additional lanes to existing Route 659 from the southern property line of Stone Ridge (Tax Map 100, Parcel 44) to Tall Cedars Parkway (approximately 3200 linear feet). The existing two lanes shall become the northbound lanes of the four-lane divided facility and shall be improved to VDOT standards, with the Applicant utilizing night-of-way provided by the Stone Ridge Development per Proffers in ZMAP 1994-0017, and constructing an additional two lanes west of the existing lanes to become the ultimate southbound lanes. Location of two lane improvements may vary subject to final engineering and right-of-way acquisition but must all lie on same side of Ultimate Center Line. Notwithstanding

any other provision in this paragraph, the Applicant shall have no obligation to perform

the proffers of this paragraph if they have been previously performed by others.

3. Two lanes of an urban, divided major collector from Tall Cedars Parkway to U.S. Route 50 along a proposed new alignment of the West Spine Road between said points of terminus. Such construction shall include the following turn lane improvements at the intersection of the West Spine Road/ and U.S. Route 50:

- a right turn lane northbound on the West Spine , Road; and
- an eastbound acceleration lane on Route 50.
- a westbound left turn lane on Route 50.

The Applicant shall submit conceptual roadway plans for the West Spine Road for VDOT review of traffic calculation prior to final design of the West Spine Road between Route 50 and Tall Cedars Parkway. Notwithstanding any other provision in this paragraph, the Applicant shall have no obligation to perform the proffers of this subsection 3. if they have been previously performed by others, provided that if the proffers of this paragraph have been previously performed by others, the Applicant shall, in lieu thereof, construct an additional two lanes, for a total of four lanes, of a four-lane divided major collector

on Route 620 across the frontage of that portion of its Property which has double frontage on Route 620, a distance of approximately 2550 linear feet, prior to commencement of Phase III of the project.

4. A half section of a four-lane divided major collector on Route 620 from the eastern boundary of the Property to the intersection of Route 620 and existing Route 659 (approximately 3200 linear feet). Location of two lane improvements may vary subject to final engineering and right-of-way acquisition, but must all lie on one side of the Ultimate Center Line.

5. An eastbound right turn lane and an eastbound left turn lane on Route 620 at existing Route 659, a southbound right turn lane from existing Route 659 to westbound Route 620, and a northbound left turn lane from existing Route 659 to westbound Route 620.

c. Dedication of Rights-of-Way.

The Applicant shall dedicate to the County the following rights- of-way in order to accommodate Phase H construction:

-subject to Section II.E., below, a right-of-way sixty feet (60') from the Ultimate Center Line of Route 659 (approximately 2700 linear feet) from the northern boundary of the Property on the west side of Route 659 to the southern boundary of Stone Ridge (Tax Map 100, Parcel 44) on Route 659.

-a ninety foot (90) right-of-way, forty-five feet (45) on both sides of the Ultimate Center Line of Route 620 from the eastern boundary of the

Property on the north side of Route 620 to the western boundary of the Property on the north side of Route 620.

- subject to Section II.E., below, a right-of-way forty-five feet (45’) from the ultimate Center line of Route 620 from the eastern boundary line of the Property to Route 659.

-subject to Section II.E., below, a right-of-way of up to sixty feet (60') from the ultimate center line of the West Spine Road from Tall Cedars Parkway to U.S. Route 50, together with that right-of-way reasonably necessary to enable the Applicant to construct the turn lane improvements proffered above at the West Spine Road and Route 50, unless said right-of-way, has previously been provided by others.

Such dedications for right-of-way shall be at no cost to the County or VDOT, and shall be provided earlier if requested by the County or VDOT.

3. Phase III (Land Bay N and R) - Prior to issuance of any zoning permits for development associated with Phase III, the Applicant will construct or bond for construction the following transportation improvements:

a. Frontage Improvements.

1. A half section of a four-lane divided major collector on Route 620 from the western boundary of the Property on the south side of Route 620 (approximately 3050 linear feet) to its eastern site entrance.

2. Left and right turn lanes on Route 620 at the intersection of Route 620 and the western site access of the Property.

b. Internal Improvements:

A two-lane connection between Route 659 Relocated and the internal road system for Phase III development in Land Bay R, as shown on the CDP, provided that Route 659 Relocated is constructed from Route 50 south to such point of connection, by others, prior to the issuance of the twelve hundred sixty-first (1261st) zoning permit for residential development, or a cash escrow payable to the County in an amount equal to the reasonably estimated cost of such connection if Route 659 Relocated is not constructed from Route 50 south to such point of connection prior to the issuance of

the one thousand two hundred sixty-first (1261st) zoning permit for residential development.

c. Dedication of Right-of-Way.

The Applicant shall dedicate to the County the following right-of-way in order to accommodate Phase III construction:

- a right-of-way forty-five feet (45') from the Ultimate Center Line of Route 620 from the western boundary of the Property on the south side of Route 620 to the western boundary of the Property on the north side of Route 620.

Such dedication shall be at no cost to the County or VDOT, and shall be provided earlier if requested by the County or VDOT.

C. Signalization.

The Applicant shall install signalization at such time as warranted by VDOT criteria (i.e., the Manual on Uniform Traffic Control Devices) at the intersections of:

(1) Route 659 (West Spine Road) and Pebble Drive.

(2) Route 620 and Eastern Site Road.

(3) Route 50 and existing Route 659 (West Spine Road).

(4) Route 659 (West Spine Road) and Route 620.

(5) West Spine Road and Route 50.

Signalization at location #2 (Route 620 and the Eastern Site Road) will provide for pedestrian signal control if requested by the County and VDOT, to serve the elementary school.

The cost of the foregoing traffic signals numbered 1 and 2, above, will be bonded at the time of the filing of the record plat for each of such intersections. If the necessary warrants for the foregoing traffic signals numbered 1 - 5, above, have not been met by the time that zoning permits are issued for the twelve hundredth (1200th) residential unit, the Applicant shall make a cash contribution to the County of ONE HUNDRED THOUSAND AND N0/100 DOLLARS ($100,000.00), escalated in accordance with the Consumer Price Index ("CPI"), per signal not yet installed. Such

contribution shall be held by the County to be used for the installation of such signal at such time as warrants are met.

D. Western Transportation Corridor Study Route 659 Relocated.

1. The Applicant recognizes that the Commonwealth of Virginia is conducting a route study for a potential Western Transportation Corridor, which may ultimately be located in the vicinity of the Property. The Applicant shall reserve for future dedication, at no public expense, right-of-way of up to a maximum of four hundred fifty feet (450’) in width in the location shown on the Concept Development Plan to accommodate the north-south principal arterial roadway contemplated by the Western Transportation Corridor Study.

2. The Applicant further acknowledges that the County may also be locating a major north/south arterial road corridor on a portion of the western boundary of the Property south of Route 620 for the extension of Route 659 Relocated south of Route 50. Therefore, the Applicant shall also reserve for future dedication at no public cost a right-of-way no more than one hundred twenty feet (120') wide in the location shown on the Concept Development Plan, to accommodate Route 659 Relocated.

3. The exact location of the reservations provided for in II. D. I. and 2., above, will be identified and will be shown on the first preliminary plan of subdivision for

any portion of the Project including or lying adjacent to said

reservations. The precise corridor to be reserved, and the width of the reservation, will

depend on the evolution of plans by VDOT and the County for the VDOT Western Transportation Corridor Study and/or Route 659 Relocated, but in no case shall such reservations exceed the widths of four hundred fifty feet (450) and one hundred twenty feet (120), respectively. The Applicant will dedicate either or both said rights-of-way upon the reasonable request of the County or VDOT.

4. These reservations of right-of-way shall expire and be of no further force and effect on the earlier to occur of (i) December 31, 2015, (ii) with respect to either

of such roads, the establishment by the County of a definitive alignment for such road in another location, or (iii) with respect to either such roadway, a decision by VDOT or the Commonwealth Transportation Board, or successor agency to either, that such roadway will not be constructed. Nothing contained in these Proffers shall be construed to impose upon the Applicant any obligation to construct or contribute to the construction of Route 659 Relocated or the Western Transportation Corridor, or to obtain right-of-way outside the Property for either of such improvements. In the event that neither condition (ii) or (iii) of this paragraph have been met by June 15, 2015, the Applicant shall, by June 15, 2015, send written notice to the County as a reminder of the pending expiration of said reservation on December 31, 2015.

5. Prior to the issuance of zoning permits for any Phase III development, the Applicant shall construct a subdivision road as a connector across

said Western Transportation Corridor reservation, as shown on the CDP; provided that the Applicant shall not construct such connector, in the event the Western Transportation Corridor, or similar roadway has previously been constructed by others on such reserved or dedicated right-of-way area, unless such Western Transportation Corridor, or similar roadway, has been constructed with an overpass or an underpass, designed to accommodate such project connector road at-grade. If the Western Transportation Corridor, or similar roadway, has previously been constructed by others, the Applicant shall provide cul-de-sacs on the connector road. In such case, the Applicant anticipates that the County will work with the Applicant and VDOT to ensure that construction plans for the Western Transportation Corridor incorporate a second point of public street access for Phase I and II development.

The Applicant anticipates the passage of a Resolution by the Board of Supervisors concurrently with the rezoning to provide a commitment by the County to work With the Applicant and VDOT to ensure that construction plans for the Western Transportation Corridor incorporate an underpass or overpass for the internal road joining the portion of the Property west of the area to be reserved with the balance of the Property.

E. Acquisition of Off-Site Right-of-Way/Easements.

1. In addition to dedicating right-of-way and easements on-site, the Applicant shall make good faith efforts to acquire off-site right-of-way or easements

necessary for the construction of the road improvements proffered herein for Phases I, II, or III. Where right-of-way and/or easements necessary for construction of proffered improvements cannot be obtained, despite such good faith efforts, either (1) voluntarily through donation or proffer to the County, or (ii) through purchase by the Applicant at a good faith reasonable price, the Applicant shall request that the County acquire such right-of-way and/or easements by appropriate eminent domain proceedings by the County, with all costs associated with the eminent domain proceedings to be borne by the Applicant (including but not limited to land acquisition costs). The initiation of such eminent domain proceedings is solely within the discretion of the County.

2. If the necessary night-of-way and/or easements cannot be acquired voluntarily, and the County chooses not to exercise its right of eminent domain within six (6) months of a written request by the Applicant, the Applicant shall be released from the obligation to acquire such right-of-way. If the County elects to defer its exercise of eminent domain, then Applicant's proffer requiring such acquisition or construction shall likewise be deferred. It is understood that the County will, in its discretion, seek said night-of-way and off-site improvements from other landowners as development occurs.

3. Notwithstanding any other provision of this Proffer Statement, should the Applicant construct any of said proffered improvements and/or provide said right-of-way in connection with off-site roadway construction on existing Route

659 from the southern boundary of Stone Ridge to Tall Cedars Parkway and from Tall Cedars Parkway north to Route 50 along a new alignment of the West Spine Road (Proffers II. B. 2. b. 2. and II. B. 2. b. 3. above), the Applicant shall request the disbursement to the Applicant by the County, at the discretion of the County, of sums equal to the actual cost to the Applicant of such construction and/or provision of right-of-way, including, the cost of the associated turn lanes, relocation of median crossing, and traffic signal, but only from monies received by the County from the developers of Stone Ridge in ZMAP 1994-0017 in lieu of construction of such improvements or from other regional roadway contribution funds proffered, by Stone Ridge in ZMAP 1994-0017, and only as such funds are paid to the County. The maximum amount of said disbursement shall be the actual cost of such construction less the estimated value - SIX HUNDRED FORTY THOUSAND AND N0/100 DOLLARS ($640,000.00) - of the additional two lane improvements to Route 620 across the twenty-five hundred and fifty feet (2550') of double frontage of Kirkpatrick Farms on Route 620.

F. Cash Equivalent Contribution.

In all Proffers wherein the Applicant has agreed to construct road improvements or traffic signals, the Applicant shall contribute to the County or its designee an amount equal to the actual cost of constructing such improvements in lieu of actual construction if said improvements have been constructed by others prior to bonding

for construction by the Applicant except for those improvements as set forth in

Proffers II. B. 2. b. 2. and II. B. 2. b. 3., above which are constructed by others. For the purposes of determining the in-lieu-of contribution, construction costs shall be defined as all engineering, surveying, bonding, permit fees, utility relocation, and other actual costs of construction. Such contribution in lieu of actual construction shall occur at the time the Applicant would otherwise have been required by these Proffers to bond or construct such improvements. As determined by the County, such contribution shall either be used to reimburse the party who constructed such improvements or for regional roadway improvements in the vicinity of and for the benefit of the Property. If the County Staff and the Applicant disagree about the cost of such improvements, and they are unable to resolve their differences, the Loudoun County Board of Supervisors shall make the final determination.

G. Emergency Access.

Prior to issuance of a zoning permit for any residential unit in Land Bays C, D, H or F, the Applicant will construct an emergency access extending from a paved portion of Pebble Drive to Route 620 at the eastern site entrance shown on the Concept Development Plan. Such emergency access will provide access to Route 620 only to emergency vehicles by means of such restriction to regular vehicular traffic as may reasonably be required by the County. The aforesaid connection to paved Pebble Drive shall be via a gravel all weather road link at least fifteen feet (15') in width and of sufficient design to support emergency vehicle traffic.

H. Construction Traffic.

1. The Applicant shall use its best efforts to see that construction traffic to and from the site of development on the Property does not utilize any two-lane roadways in the State secondary road system one hour prior to the commencement of classes at the County public schools and one hour after the end of such classes, Monday through Friday, when the County public school system is in session. The Applicant shall insert language to this effect in its contracts of sale with all providers of residential units on the Property.

2. The Applicant shall use its best efforts to see that construction traffic to and from the site development on the Property does not utilize Braddock Road until Phase II improvements to Route 620 are in place.

III. CAPITAL FACILITIES:

A. Elementary School Site.

1. Reservation and Dedication - The Applicant shall reserve a site of approximately twenty (20) acres for use as an elementary school (the "School Site") in the approximate location indicated on the Concept Development Plan (Land Bay J). The Applicant shall dedicate such School Site to the County when requested by the County, but in no event earlier than the time of recordation of the first record plat for a

DEPARTMENT OF PLANNING
STAFF REPORT

SECOND PLANNING COMMISSION PUBLIC HEARING

DATE OF HEARING: February 12, 1997
CASE NUMBER/CASE NAME: ZMAP 1995-0014, Kirkpatrick Farms
DECISION DEADLINE: March 20,1997
ELECTION DISTRICT: Mercer **PROJECT PLANNER: Wanda Suder**

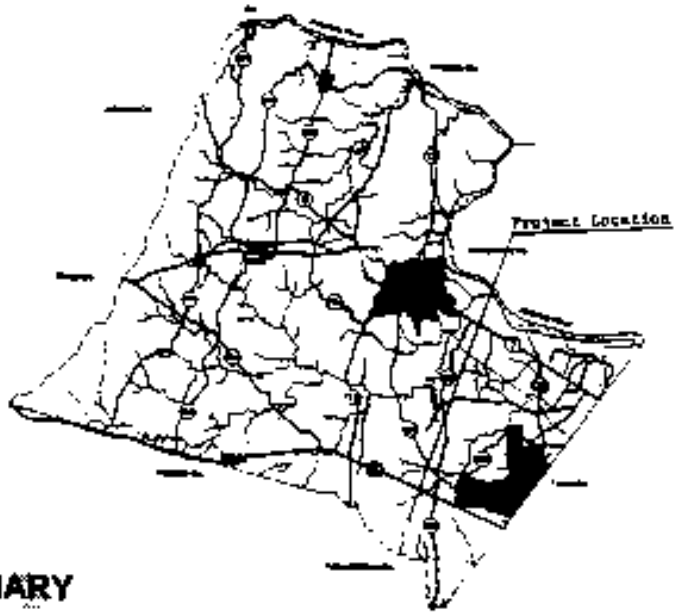

EXECUTIVE SUMMARY

L&K Holding Corporation of Washington, D.C. has requested that 405.05 acres be rezoned from A-3 (Agricultural Residential) and CR-1 (Countryside Residential) to PDH-4 (Planned Development Housing-4) to allow construction of up to 1,406 dwelling units, 25,000 square feet of retail uses, a 3 acre private park/church/daycare facility site, a 20-acre elementary school site and various recreational facilities. Modifications are requested to the Zoning Ordinance and the Facilities Standards Manual to permit pipestem lots. The applicant proposes residential base densities of 5.28 dwelling units per acre north of Route 620 and 2.04 dwelling units per acre south of Route 620 for an overall density of 3.11 dwelling units per acre. The property is located south of Route 50, approximately one-half mile west of the Route 659 (Gum Spring Road) and Route 620 (Braddock Road) intersection and fronting both sides of Route 620 for approximately 2,500 feet and then only on the south side of Route 620 for approximately 1,500 feet.

The applicant has granted a timeline extension to March 20, 1997.

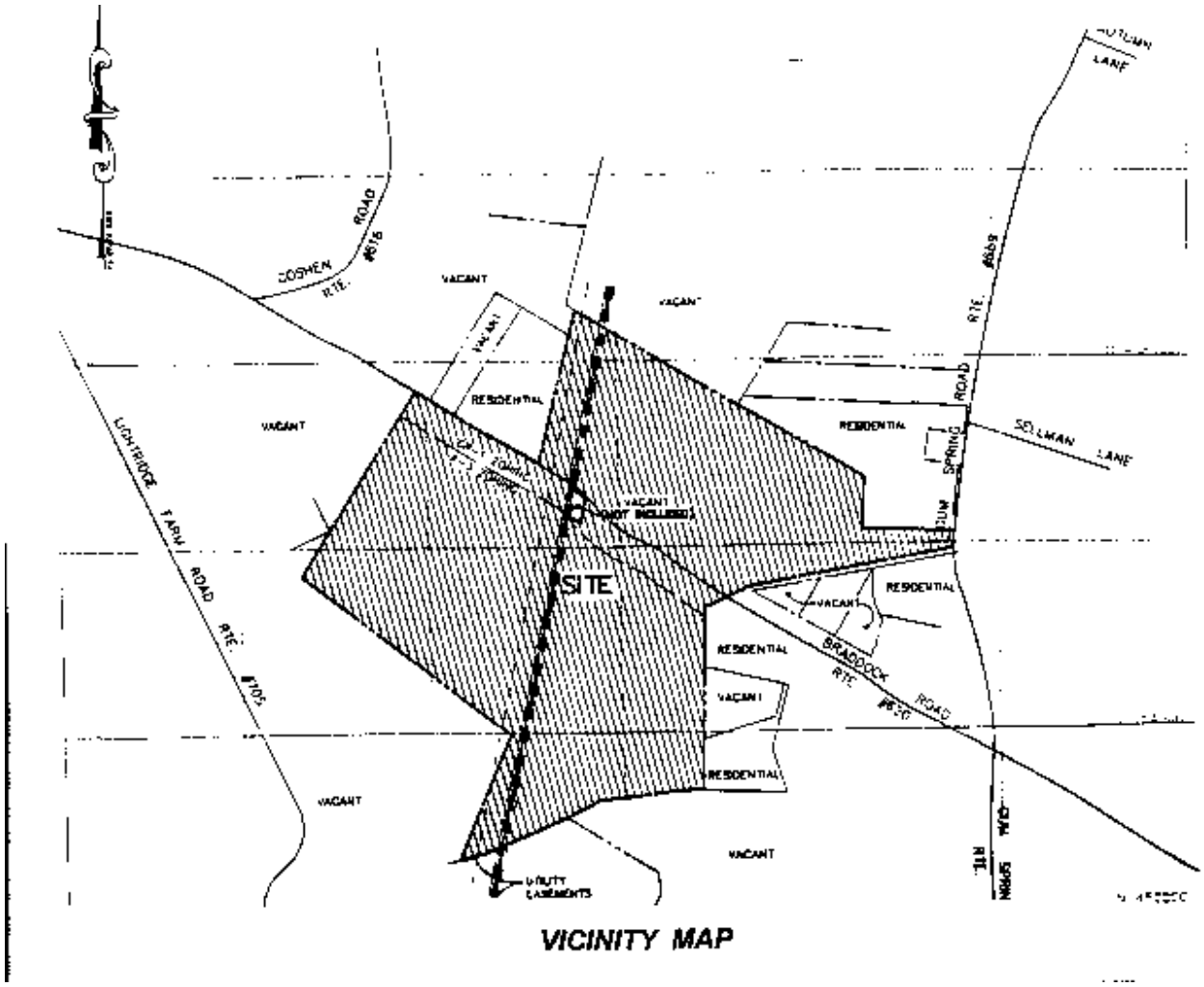

Directions: From Leesburg, follow Route 15 south to a left on Route 621 (Evergreen Mills Road). In the Village of Arcola, turn right onto Route 659 (Gum Spring Road). Travel south across Route 50 to the intersection with Route 620 (Braddock Road). Turn right and travel approximately one-half mile to the property located on the north and south sides of the road.

II. REFERRAL AGENCY COMMENT SUMMARY

Referral Agency	Referral Received	Outstanding Issues	Recommendation			Referral Page #	Applicant's Response/ Page #
			Approval	Denial	None		
Comprehensive Planning	8/20/96 (latest)	▸ Capital facilities value verification			X	A1	A98 & A130
Zoning Administration	9/26/96 (latest)	▸ Provide accurate calculations of density/site tabulations ▸ Clarify where modifications applicable and justifications ▸ Parking lots/rear yards can not be included in buffer area ▸ Provide sufficient open space ▸ Proffer clarifications			X	A18	A130
Transportation Div.	9/26/96 latest	▸ Provide improvements or ensure capacity at commencement of each phase to achieve Level of Service "D," per the CTP ▸ Phase 2: Route 659 as four lane divided from Rt 620 to Stone Ridge; construct/contribute to Rt 659 off-site: full frontage improvements on Rt 620 ▸ Phase 3: Rt 620-full frontage; Rt 50 improvements ▸ Proffer clarifications ▸ Highway Noise Buffer on CDP (can not include private property) ▸ Temporary cul-de-sac at northern end of Pebble Drive ▸ Highway Noise Analysis: correct errors			X	A27 & A103	A98 & A130
VDOT	9/25/96 (latest)	▸ Need to provide for adequate function and traffic volumes on all affected roads ▸ Typical section ▸ Concern with road serving school site ▸ Consistency with CTP ▸ Timing of Western Transportation Corridor reservation ▸ Full frontage improvements: Braddock Road			X	A51 & A111	A130

4. Community character/identity: The Planning Commission requested that the applicant specify how this project meets the "Mission Statement" of the Dulles South Area Management Plan and the "Purpose" of the *Planned Development-Housing* zoning district regulations.

The applicant made a presentation regarding the amenities proposed to enhance the community focus. The applicant has revised the proffers to reflect this proposed amenities package. The applicant has also revised the Concept Development Plan to reflect the discussions at the December 10, 1996 Committee of the Whole meeting.

5. Mr. Gordon Fletcher of the School Board staff was available to answer questions regarding the timing of construction of the Elementary School being proffered by the applicant and which schools might serve students of the Kirkpatrick Farms project. The timeframe for the construction of the Elementary School depends to a large extent on the pace at which the project itself develops as school sites are generally dedicated during the record plat phase of the any project.

The following outstanding transportation issues were discussed:

1. Phase 2 Improvements

   a. Route 659 (Off-site/Regional):

   Staff recommends that the applicant construct a four-lane divided roadway between Route 620 and the four-lane improvements proffered by the approved Stone Ridge development. This project's Phase 2 will generate 6,280 vehicles per day north of the entrance (Pebble Drive) onto Route 659 and 2,960 vehicles per day south of this entrance.

   The applicant's revised 2008 analysis determined that the northern leg of the Route 659/Pebble Drive intersection needs to be four-lanes for the intersection to operate at acceptable levels of service during the peak hours. Based on the current two-lane configuration, staff analyzed this segment of Route 659 assuming the revised 2008 background projections. The two-lane section will operate at Level of Service "E" during the peak hours in the background condition. In the condition including this project's traffic, the two-lane section of Route 659 both north and south of Pebble Drive will operate at Level of Service "F" during the peak periods.

   According to the Countrywide Transportation Plan (CTP) Policy 6.22, the road capacity to serve each project phase shall be available at the commencement of that phase. In addition, according to CTP Policies

5.12 and 5.13, land development shall occur along roads which function at Level of Service "D" or better. Therefore, Route 659, between the Stone Ridge southern property boundary and Route 620, should be upgraded by this applicant to provide the needed capacity to accommodate this project's Phase 2 and Phase 3 traffic.

The **applicant has only agreed** to widen the segment of Route 659 from north of this site to the southern boundary of the Stone Ridge project.

The Transportation Committee recommended that the applicant construct Route 659 as a four lane divided section from the project entrance onto Route 659 north to the southern boundary of the Stone Ridge property with no improvements recommended south of the project on Route 659.

The applicant has revised the proffer statement to reflect this recommendation.

b. Route 659 (Off-site/Regional - between the southern boundary of Stone Ridge and Route 50):

Staff recommends that this segment be upgraded, by others and/or this applicant to a four-lane divided road. The projected background traffic (17,870 vehicles per day) alone will exceed the capacity of the existing two-lanes of Route 659. Therefore, with the additional traffic from this project's Phase 2 (6,280 vehicles per day), this widening improvement proffered by Stone Ridge should be in place prior to the commencement of Phase 2 of this project. If Stone Ridge does not fulfill their proffer to widen this segment of Route 659, then the applicant should either construct the said improvements or wait until Stone Ridge constructs the improvements.

Once Route 659 is upgraded to a four-lane divided road from Route 620 to Route 50, the additional capacity will be available to accommodate this project's Phase 2 and Phase 3 generated traffic. This recommendation is consistent with CTP Policies 5.12, 5.13, and 6.22.

The applicant had not accommodated this request.

The Transportation Committee recommended that the applicant construct Route 659 as a four lane divided roadway from the Stone Ridge southern property boundary to Tall Cedars Parkway at an estimated cost of $880,000. It was determined that the applicant could seek reimbursement for this portion of the improvements

since this improvement is proffered by the Stone Ridge project. The applicant would only construct this roadway if Stone Ridge has not made the improvement prior to this project advancing to the point when the capacity would be needed along this segment.

The applicant has revised the proffer statement to reflect this recommendation.

Further, the Transportation Committee, recommended that the applicant construct the improvements to the realigned West Spine Road between Route 50 and Tall Cedars Parkway in a two lane configuration. The cost of this construction, up to the estimated cost of constructing the third and fourth lanes on Braddock Road, would not be eligible for reimbursement. This amount is estimated to be approximately $640,000, in today's dollars. Should the cost of this improvement exceed this amount, for either right-of-way acquisition or construction, then the applicant could be eligible for reimbursement from others.

The applicant revised the proffer statement to reflect this recommendation.

c. Route 620 (On-site/Frontage):

Staff recommends that the applicant construct full frontage improvements along the Phase 1 and Phase 2 frontage of the project, as per the Facilities Standards Manual (FSM). This improvement would include the applicant dedicating the full right-of-way of 90 feet and constructing this road to a full four-lane divided section, where the applicant has frontage on both sides of the road.

The **applicant has only agreed** to construct two lanes of the four-lane road, where site frontage exists on both sides of this road. The applicant states that the site generated traffic combined with the background does not generate the need for the full four-lane section.

The Transportation Committee recommended that the applicant dedicate right-of-way for the full frontage improvements which are shown in the Countrywide Transportation Plan to be four lanes with a median. Further, the Transportation Committee recommends that the applicant only make a commitment to construct two lanes across the frontage of the property, even where the applicant controls both the north and the south side of the road. The understanding is that the dollar value of the improvements for the

third and fourth lanes would be transferred to construct a two lane improvement for the realigned West Spine Road between Route 50 and Tall Cedars Parkway, as discussed above in "b".

The applicant has revised the proffers to reflect this recommendation.

2. Phase 3 Improvements

a. Route 620 (On-site/Frontage):

Staff recommends that the applicant construct full frontage improvements along the Phase 3 frontage of the project, as per the FSM. This improvement would include the applicant dedicating the full right-of-way of 90 feet and construct this road to a full four-lane divided section, where the applicant has frontage on both sides of the road.

The **applicant has only agreed** to upgrade the segment of Route 620 where the applicant has double frontage to a half section of a four-lane divided road.

The Transportation Committee recommended that the applicant dedicate right-of-way for the full frontage improvements which are shown in the Countrywide Transportation Plan to be four lanes with a median. Further, the Transportation Committee recommends that the applicant only make a commitment for construct two lanes across the frontage of the property, even where the applicant controls both the north and the south side of the road. The understanding is that the dollar value of the improvements for the third and fourth lanes would be transferred to construct a two lane improvement for the realigned West Spine Road between Route 50 and Tall Cedars Parkway, as discussed above.

The applicant has revised the proffer statement to reflect this recommendation.

The Planning Commission voted to recommend to the applicant to include a 25,000 square foot retail component in the project. The applicant generally agreed. The Planning Commission then voted to send the application to a second public hearing since there was no retail component advertised for the October 9, 1996 public hearing. The inclusion of the retail uses constitutes a more intense use which the Zoning Ordinance states must be readvertised and considered at a second public hearing.

The Planning Commission further requested that the applicant revise the traffic study

to include the retail component. Staff was requested to evaluate the revised traffic study and to provide comments regarding the draft proffer statement.

STAFF RECOMMENDATION

Staff has conducted an evaluation of the traffic analysis (Please reference page A103). Staff found that the inclusion of the retail component seriously impacts the "Level of Service" on both Route 659 south of the project entrance and on Route 620. Route 659, south of the project entrance, should be upgraded to a four lane divided section, consistent with the portion north of the project entrance. Additionally, Route 620 should be upgraded to a full four lane divided facility from the Route 659 intersection to the eastern project entrance which will serve the retail use.

Additionally, staff was asked to review the revised proffer statement (Please reference page A117). The County Attorney has requested substantial clarifications to the proffer statement.

Staff **can not** support approval of this application and recommends that the application be referred to the appropriate committee(s).

IV. PROJECT REVIEW

A. OVERALL ANALYSIS

COMPREHENSIVE PLANNING

This project is governed by policies contained in the Choices and Changes: Loudoun County General Plan (General Plan and the Dulles South Area Management Plan (DSAMP). Kirkpatrick Farms lies in the Phase II Eastern Urban Growth Area, as designated by the General Plan. The DSAMP provides more specific policy guidance regarding land use. Development is recommended in areas of Dulles South where access to roads and utilities is feasible. The area south of Braddock Road is designated as appropriate for Low Density Residential development using densities between one and three dwelling units per acre. The Light Industrial designation applies to the area north of Braddock Road which may contain a component of Moderate Density Residential development at a density of between three and six dwelling units per acre. This designation is predicated upon the quarry, rezoned in 1991 during the Alliance application, having been rezoned to residential uses. Such rezoning occurred in December 1995 when Stone Ridge, ZMAP 1994-0017, was approved by the Board of Supervisors. The applicant proposes residential densities of 5.31 dwelling units per acre north of Route 620 and 2.04 dwelling units per acre south of Route 620, for an overall density of 3.13 dwelling units per acre.

Staff finds that the density and other components of the project generally meet the policy guidelines. However, the valuation of the land for the school has not been

completed at this time, so staff can not make a final determination regarding the capital facilities contributions/improvements proposed by the applicant.

ZONING

Staff generally finds the proposal acceptable, pending the resolution of a few issues. The modifications and the associated justifications appear acceptable, however, the applicant must be more specific regarding which modifications will apply to which land bays. As regards the setback modification along major roads, staff continues to have a concern that the applicant proposes to include parking lots and rear yards within the setback area. The applicant has withdrawn the setback modification request.

There continue to be concerns regarding the density calculations. The proposal is 1.64 acres short of the 30% open space requirement for a total of 105.47 acres. The applicant has revised the calculations. Staff finds that the open space requirement has been adequately addressed.

As regards the Affordable Dwelling Units (ADUs), staff notes that only townhouse and multi-family units are being provided and no single family detached units. Additionally, the applicant is not proposing to disperse the ADUs throughout the project. During the Planning Commission discussions it was determined that the Zoning Administrator has found similar proposals acceptable.

COUNTY TRANSPORTATION

Kirkpatrick Farms gains access from Route 659 and from Braddock Road. Staff has serious concern that the commitments made by this applicant to the regional road network are inadequate to mitigate the traffic impacts. As proposed by the applicant, the capacity will not exist at the commencement of each phase to achieve a Level of Service "D," as indicated in the policies of the Countrywide Transportation Plan. The phasing plan, as proposed by the applicant, does not provide sufficient capacity for the level of development defined in each phase.

Transportation staff **can not** support approval of this application.

VIRGINIA DEPARTMENT OF TRANSPORTATION

VDOT staff notes that the applicant must provide for the adequate function and traffic volumes on the following roads: Route 659, Braddock Road, Pebble Road, and the school access road, especially where those road serve a regional function, as described in the Countrywide Transportation Plan. Route 50 is an important component of the road network needed to the serve this project. VDOT staff

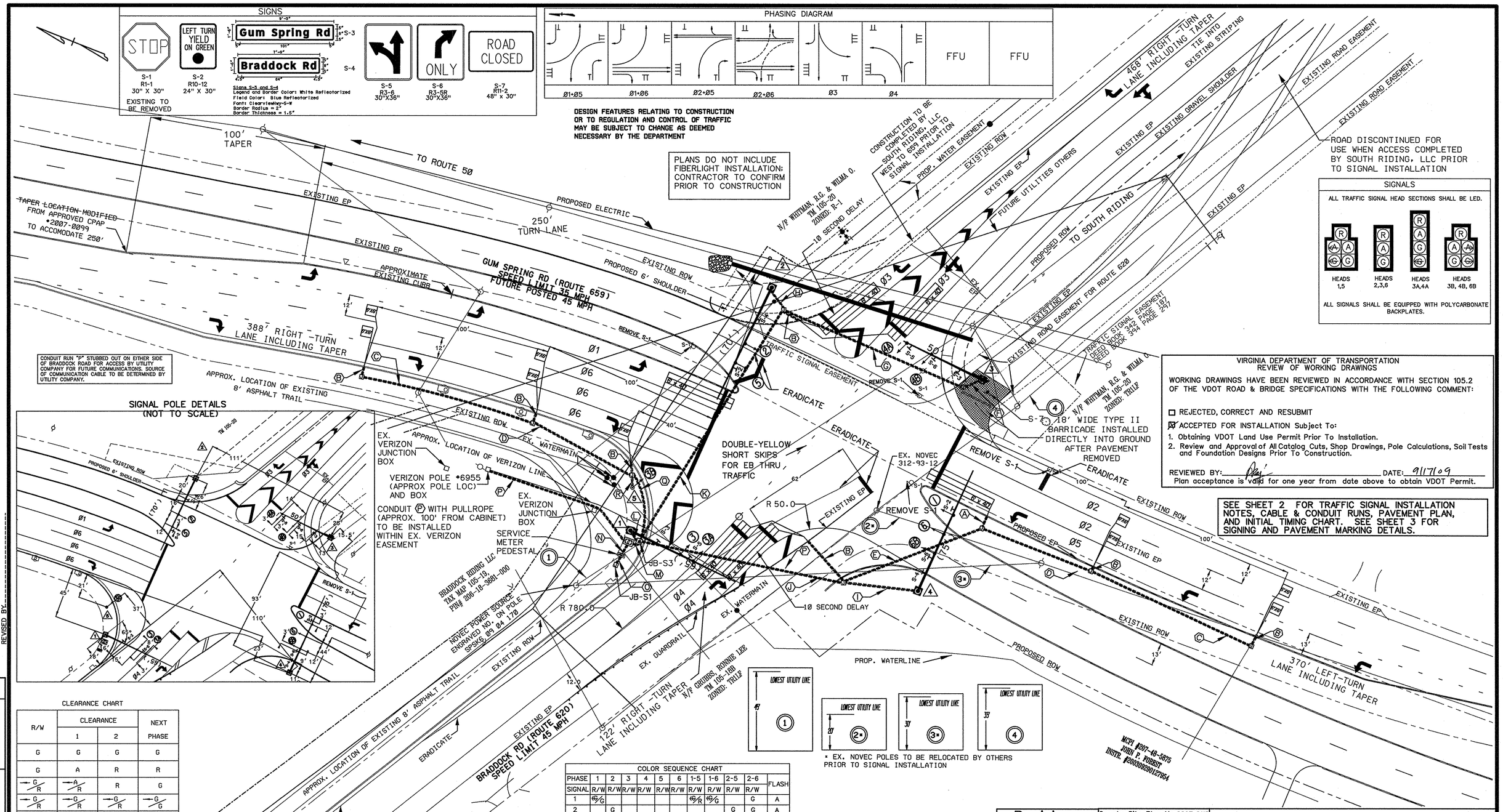

CLEARANCE CHART

R/W	CLEARANCE 1	CLEARANCE 2	NEXT PHASE
G	G	G	G
G	A	R	R
G/R	A/R	R	G
G/R	G/R	G/R	G/G
G/G	A/G	G	G
G/G	A/A	R	R
G/G	A/G	R/G	R/G
R/G	R/G	R/G	R/G
R/G	R/A	R	R
G/G	A	R	R

COLOR SEQUENCE CHART

PHASE	1	2	3	4	5	6	1-5	1-6	2-5	2-6	FLASH
SIGNAL	R/W	R/W	R/W	R/W	R/W	R/W	R/W	R/W	R/W	R/W	
1	G/G						G/R	G/G		G	A
2		G							G	G	A
3			G								R
3A			G/G								R
3B			G/G				R/G	R/G			R
4A				G/G							R
4B				G/G			R/G		R/G		R
5					G/G		G/R		G/G	G	A
6						G		G		G	A
6B				R/G		G		G/G		G	A

NOTE: BLANK SPACES REPRESENT A RED DISPLAY.

LEGEND

ELECTRIC	EXISTING SIGN
TELEPHONE	GRATE DROP INLET
GAS	FIRE HYDRANT
SEWER	GAS VALVE
WATER	WATER VALVE
UTILITY POLE AND OVERHEAD UTILITY LINES	PROPOSED ROW
	EXISTING ROW
	EASEMENTS

Revisions	
Date	Initial
12-08	LHB
2-09	LHB
5-09	LHB
6-09	LHB

County Site Plan No. 2007-0112
VDOT Permit No.

COMMONWEALTH OF VIRGINIA
DOUGLAS R. KENNEDY
Lic. No. 21450
6/19/09
PROFESSIONAL ENGINEER

P.E. Seal

FINAL TRAFFIC SIGNAL INSTALLATION PLAN

GUM SPRING RD (ROUTE 659) & BRADDOCK RD (ROUTE 620)

LOUDOUN COUNTY

PATTON HARRIS RUST & ASSOCIATES
Engineers. Surveyors. Planners. Landscape Architects
14532 Lee Road
Chantilly VA 20151
T 703.449.6700
F 703.449.6714

SCALE 0 25' 50'

Date: NOVEMBER 2008
File:
Sheet: 1 of 3

DRAWN: LHB DESIGNED: LHB CHECKED: DRK

PLAN NO.	PROJECT	FILE NO.	SHEET NO.
A		9789-3-0	1

SUPERVISED BY
DESIGNED BY
CADD OPERATOR
REVISED BY

PLAN
NOTE BOOK
NO.
SUBMITTED
PLOTTED
AS CONSTRUCT CHECKED
SIGNIT OF INT CHECKED
BY
DATE

TIMESTAMP

A. Remove existing Southbound Route 659 rumble strips (20' length) located approximately 595' from ex. stop bar.
B. Remove existing "STOP AHEAD" pavement text located approximately 955' from ex. stop bar.

2 W2-2

EX. "NEW TRAFFIC PATTERN" SIGN TO BE REMOVED WITH WIDENING

SEE KIRKPATRICK FARMS CPAP 2007-0099 FOR ROADWAY AND PAVEMENT DETAILS TO THE NORTH

Ex. Sign 3 located approximately 890' from ex. stop bar to be removed and replaced with Sign 6

3 W1-3a

6 W3-3

FOR TURN LANES, SHORT SKIPS SHALL RUN ½ OF TURN LANE LENGTH PLUS TAPER.

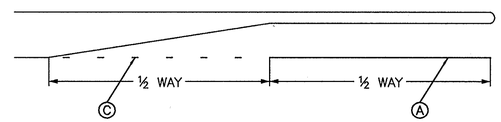

Sign 5 to be located at start of taper

5 R3-8 (mod)

11 R2-1

LEGEND

- 3 R3-7(D) Existing Signs
- 3 R3-7(D) Proposed Signs
- A Existing Striping
- A Proposed Striping
- Existing Post Mounted Sign
- Proposed Post Mounted Sign

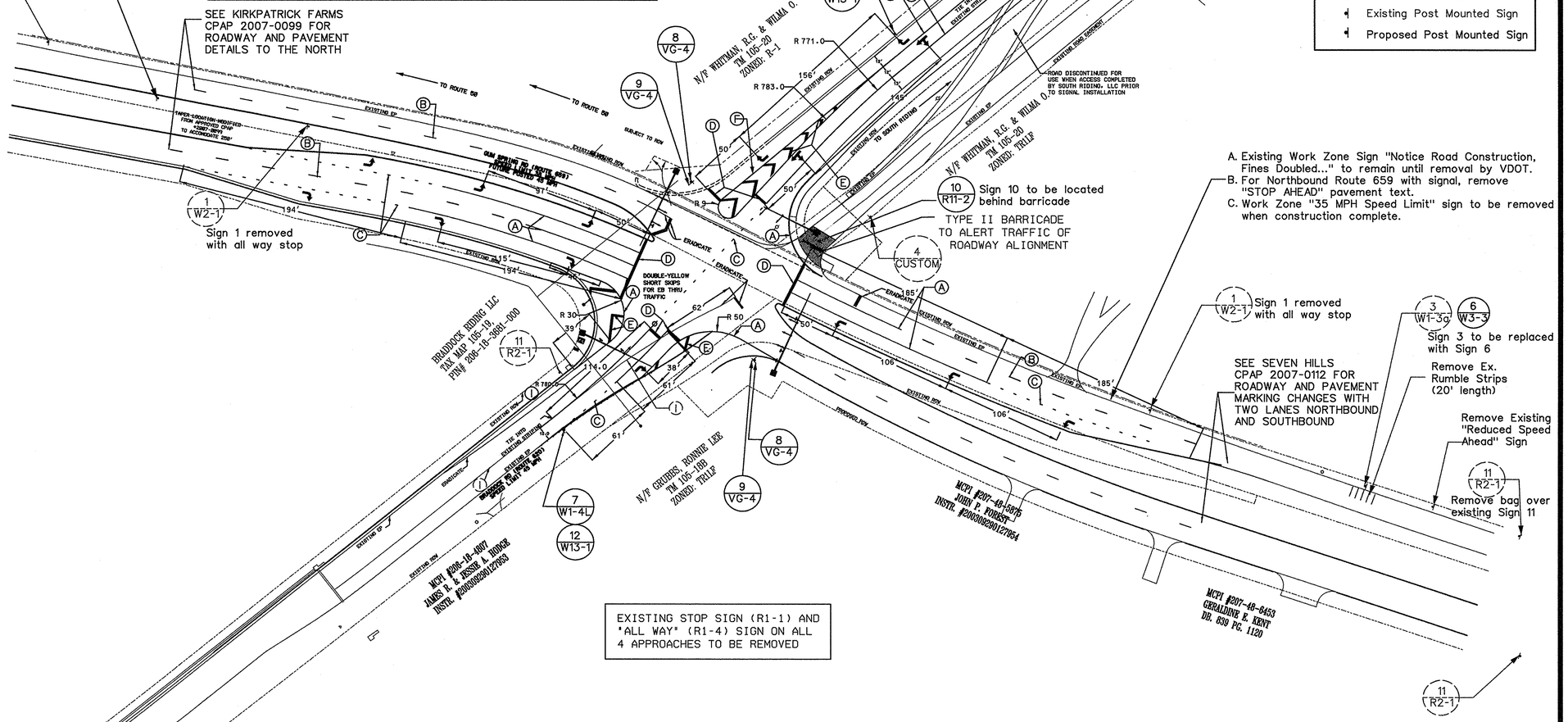

A. Existing Work Zone Sign "Notice Road Construction, Fines Doubled..." to remain until removal by VDOT.
B. For Northbound Route 659 with signal, remove "STOP AHEAD" pavement text.
C. Work Zone "35 MPH Speed Limit" sign to be removed when construction complete.

1 W2-1 Sign 1 removed with all way stop

3 W1-3a 6 W3-3 Sign 3 to be replaced with Sign 6

SEE SEVEN HILLS CPAP 2007-0112 FOR ROADWAY AND PAVEMENT MARKING CHANGES WITH TWO LANES NORTHBOUND AND SOUTHBOUND

Remove Ex. Rumble Strips (20' length)

Remove Existing "Reduced Speed Ahead" Sign

11 R2-1 Remove bag over existing Sign 11

EXISTING STOP SIGN (R1-1) AND "ALL WAY" (R1-4) SIGN ON ALL 4 APPROACHES TO BE REMOVED

PAVEMENT MARKING LEGEND

- (A) TYPE B, CLASS I, WHITE, 4" WIDTH. #
- (B) TYPE B, CLASS I, WHITE, 4" WIDTH, 10' LONG, 30' SPACE. #
- (C) TYPE B, CLASS I, WHITE, 4" WIDTH, 2' LONG, 10' SPACE. #
- (D) TYPE B, CLASS I, WHITE, 24" WIDTH. #
- (E) TYPE B, CLASS I, WHITE, 24" WIDTH, 20' SPACING, 45 DEGREE ANGLE.
- (F) TYPE B, CLASS I, WHITE, 6" WIDTH.
- (G) TYPE B, CLASS I, WHITE, 24" WIDTH. 2' SPACE
- (H) TYPE B, CLASS I, YELLOW, 4" WIDTH.
- (I) TYPE B, CLASS I, YELLOW, 4" WIDTH DOUBLE LINE SEPARATED BY A 4" SPACE.
- (J) TYPE B, CLASS I, YELLOW, 24" WIDTH, 20' SPACING, 45 DEGREE ANGLE.
- (K) TYPE B, CLASS I, WHITE, 6" WIDTH, 2' LONG, 10' SPACING.
- TYPE B, CLASS I, WHITE, ELONGATED ARROW.
- (*) TYPE B, CLASS I, WHITE, WORD MESSAGE "ONLY".

TYPE B, CLASS VI FOR PAVEMENT MARKINGS ON GUM SPRING ROAD

SIGNING AND PAVEMENT MARKING NOTES

1. All proposed signing and pavement marking shall be in accordance with the most current edition of each of the following and any revision thereto:
   - A. Manual on Uniform Traffic Control Devices.
   - B. The Virginia Supplement to the Manual on Uniform Traffic Control Devices.
   - C. The Virginia Department of Transportation Road and Bridge Specifications.
   - D. The Virginia Department of Transportation Road and Bridge Standards.
2. All proposed pavement markings shall be Type B, Class VI on Gum Spring Road and Type B, Class I on Braddock Road unless otherwise noted.
3. Proposed sign locations are approximate and shall be modified in the field to avoid conflict with underground utilities or other obstructions, and to comply with standards referenced in Note 1.
4. Any existing pavement markings, which will conflict with proposed pavement markings, shall be completely eradicated.
5. Limits shown of proposed markings are approximate and shall be modified in the field to insure that the proposed pavement markings continue until existing pavement markings can be matched.
6. Stop bars shall be 24" in width and shall be located as shown on the traffic signal plans.
7. Arrows shall be in accordance with the federal Manual of Uniform Traffic Control Devices.

Sign No.	1	2	3*	4	5	6	7	8	9	10	11	12
Sign STD. NO.				ADOPT A HIGHWAY CUSTOM	ONLY			659	620	ROAD CLOSED	SPEED LIMIT 45	40 M.P.H.
STD. NO.	W2-1	W2-2	W3-1a	CUSTOM	R3-8a(MOD)	W3-3	W1-4L	VG-4	VG-4	R11-2	R2-1	W13-1
Size	30" X 30"	30" X 30"	36" X 36"	CUSTOM	30" X 30"	36" X 36"	30" X 30"	24" X 9"	24" X 9"	48" X 30"	24" X 30"	18" X 18"

* EXISTING SIGNS TO BE REMOVED

LEGEND

- E — ELECTRIC
- T/Tg — TELEPHONE
- G — GAS
- S — SEWER
- W — WATER
- GRATE DROP INLET
- FIRE HYDRANT
- GAS VALVE
- WATER VALVE
- PROPOSED ROW
- EXISTING ROW

Revisions

Date	Initial
12-08	LHB
2-09	LHB
5-09	LHB
6-09	LHB

County Site Plan No. 2007-0112
VDOT Permit No.

COMMONWEALTH OF VIRGINIA
DOUGLAS R. KENNEDY
Lic. No. 21450
6/9/09
PROFESSIONAL ENGINEER

P.E. Seal

SIGNING AND PAVEMENT MARKING PLAN

GUM SPRING RD (ROUTE 659) & BRADDOCK RD (ROUTE 620)

LOUDOUN COUNTY

PATTON HARRIS RUST & ASSOCIATES
Engineers. Surveyors. Planners. Landscape Architects
PHR+A
14532 Lee Road
Chantilly VA 20151
T 703.449.6700
F 703.449.6714

SCALE 0 50' 100

Date: NOVEMBER 2008

DRAWN: LHB DESIGNED: LHB CHECKED: DRK

File: Sheet: 3 Of 3

PLAN NO.	PROJECT	FILE NO.	SHEET NO.
A		9789-3-0	3

SUPERVISED BY
DESIGNED BY
CADD OPERATOR
REVISED BY

NO.	BY	DATE

PLAN
NOTE BOOK NO.
SURVEYED
PLOTTED
PLUMBNET CHECKED
START OF INT CHECKED

$TIME$$STAMP