GE Energy

GE's 7FA Gas Turbine 2010 Uprate

fact sheet

Increased Efficiency and Output

Utilizing existing advanced technology in turbine materials and designs combined with GE's F-technology operating experience of more than 25 million hours, GE Energy is introducing a performance uprate for their 7FA (7241) gas turbine. This uprate provides improved heat rate and increased output, while maintaining the 7FA's current F-class leading level of reliability and availability. The benefits translate into lower fuel costs and improved revenues for 7FA users in both simple and combined cycle operation.

How It Works

The 2010 uprate is based on an enhanced version of the buckets, shrouds and nozzles of the 7FB turbine section. This flow down of advanced technology allows the 7FA to achieve 7FB performance while maintaining equivalent combustion temperatures. The result is a higher performing gas turbine with the same proven emission characteristics of today's 7FA.

In addition to an enhanced hot gas path, the uprate incorporates two key elements of GE's Cooling Optimization performance package. These features include a case temperature management control system and a high efficiency low-pressure drop combustion liner.

Reducing Operating Costs, Improving Performance

GE Energy's advanced technology gas turbine upgrades enhance unit performance, and yield benefits with an attractive economic payback.

2010 Uprate for 7FA

CC Heat rate improvement	up to 1.6%
CC Output increase	up to +3.4%
SC Heat rate improvement	up to 2.6%
SC Output increase	up to +4.5%

With no additional impact on the life of the parts

Ease of Installation

On all new 7FA units the hot gas path is integral to the offering and does not have an impact on typical flange-to-flange installation. This uprate is also available for existing 7FA gas turbines and can be installed during a typical hot gas path or major inspection.

The GE Advantage – Our Fleet

Enhancing Performance

For new unit opportunities GE is using the domain knowledge of its FB platform to provide an improved hot gas path section. As a result users of 7241 gas turbines get the benefits of FB performance with the flexibility and reliability of the 7FA.

Maintaining World Class F-technology Emission Levels

The 2010 uprate will provide equivalent emissions performance of the current 7FA – 9PPM NO_x and CO. This is achieved by lowering the amount of cooling needed in the hardware, resulting in a higher firing temperature without increasing the combustion temperature.

Most Reliable Fleet in the Industry

Per ORAP* data, over the past two decades GE's 7FA continues to lead F-technology gas turbines in reliability and availability. This high reliability and availability rate translates to increased operability and reduction in life cycle cost.

Wide Range of Applications

GE Energy's wide range of flexible power generation applications for the MS7001 FA gas turbine include combined cycle, cogeneration, simple-cycle peaking and Integrated Gasification Combined Cycle (IGCC) in both cyclic and base load operation using a wide range of fuels.

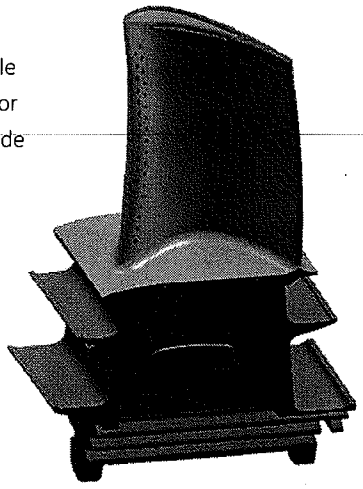

For more information, contact your GE representative or visit www.ge/com/energy.

* ORAP® is a registered trademark of Operational Reliability Analysis Program
© 2008 General Electric Company. All rights reserved.

Printed on recycled paper. GEA-17153 (09/08)

NEW 7FA.04

AVAILABLE 2ND Q 2010

ESTIMATED PERFORMANCE 7FA Natural Gas

Load Condition		100%	75%	60%
Inlet Loss	in H2O	3	3	3
Exhaust Pressure Loss	in H2O	5.5	3.7	3
Ambient Temperature	deg F	59	59	59
Ambient Relative Humidit	%	60	60	60
Evap. Cooler Status		None	None	None
Evap. Cooler Effectivene:	%			
Fuel Type		Methane	Methane	Methane
Fuel LHV	BTU/lb	21,515	21,515	21,515
Fuel Temperature	deg F	80	80	80
Output	kW	184,300	138,200	110,600
Heat Rate (LHV)	BTU/kWh	8,940	9,660	10,660
Heat Cons. (LHV)	MMBTU/hr	1,648	1,335	1,179
Exhaust Flow	x10^3 lb/hr	3554	2885	2598
Exhaust Temperature	deg F	1122	1151	1176
Exhaust MolWt	lb/lbmol	28.37	28.37	28.38
Exhaust Energy	MMBTU/hr	980.7	819	754.9

EMISSIONS

NOx	ppmvd @ 15% O	9	9	9
NOx AS NO2	lb/hr	59	48	42
CO	ppmvd	9	9	9
CO	lb/hr	29	23	21
UHC	ppmvw	7	7	7
UHC	lb/hr	14	11	10
Particulates	lb/hr	9	9	9

(PM10 Front-half Filterable Only)

*** See Combustion For Emissions

EXHAUST ANALYSIS % VOL.

Argon	0.89	0.89	0.9
Nitrogen	74.36	74.39	74.46
Oxygen	12.33	12.43	12.64
Carbon Dioxide	3.84	3.79	3.7
Water	8.59	8.5	8.31

SITE CONDITIONS

Elevation	ft	0
Site Pressure	psia	14.7
Exhaust Loss	in H2O	5.50 @ ISO Conditions
Relative Humidity	%	60
Application		Hydrogen-Cooled Generator
Power Factor (lag)		0.8
Combustion System		9/42 DLN Combustor

Emission information based on GE recommended measurement methods. NOx emissions are corrected to 15% O2 without heat rate correction and are not corrected to ISO reference condition per 40CFR 60.335(a)(1)(i). NOx levels shown will be controlled by algorithms within the SPEEDTRONIC control system.

IPS- Version Code - 3.8.0/177E0/3.8.0/PG7241-05A-0808B
MCMURRMI 10/7/2008 7:35

General Electric Proprietary Information

FUEL OIL

ESTIMATED PERFORMANCE PG7241

Load Condition		100%	75%	60%
Inlet Loss	in H2O	3	3	3
Exhaust Pressure Loss	in H2O	6	3.8	3.1
Ambient Temperature	deg F	59	59	59
Ambient Relative Humidit	%	60	60	60
Evap. Cooler Status		None	None	None
Evap. Cooler Effectivene	%			
Fuel Type		Distillate	Distillate	Distillate
Fuel LHV	BTU/lb	18,300	18,300	18,300
Fuel Temperature	deg F	80	80	80
Liquid Fuel H/C Ratio		1.8	1.8	1.8
Output	kW	195,100	146,300	117,100
Heat Rate (LHV)	BTU/kWh	9,605	10,310	11,240
Heat Cons. (LHV)	MMBTU/hr	1,874	1,508	1,316
Exhaust Flow	x10^3 lb/hr	3717	2959	2643
Exhaust Temperature	deg F	1097	1150	1175
Exhaust MolWt	lb/lbmol	28.28	28.32	28.37
Exhaust Energy	MMBTU/hr	1018.6	853	777.8
Water Flow	lb/hr	136,820	100,660	82,310

EMISSIONS

NOx	ppmvd @ 15% O	42	42	42
NOx AS NO2	lb/hr	326	260	225
CO	ppmvd	20	20	20
CO	lb/hr	65	52	47
UHC	ppmvw	7	7	7
UHC	lb/hr	15	12	10
Particulates	lb/hr	17	17	17
(PM10 Front-half Filterable Only)				

EXHAUST ANALYSIS % VOL.

Argon	0.85	0.85	0.87
Nitrogen	70.88	71.2	71.6
Oxygen	10.85	10.91	11.24
Carbon Dioxide	5.66	5.68	5.52
Water	11.77	11.36	10.78

SITE CONDITIONS

Elevation	ft	0
Site Pressure	psia	14.7
Exhaust Loss	in H2O	5.50 @ ISO Conditions
Relative Humidity	%	60
Application		Hydrogen-Cooled Generator
Power Factor (lag)		0.8
Combustion System		9/42 DLN Combustor

Emission information based on GE recommended measurement methods. NOx emissions are corrected to 15% O2 without heat rate correction and are not corrected to ISO reference condition per 40CFR 60.335(a)(1)(i). NOx levels shown will be controlled by algorithms within the SPEEDTRONIC control system.
Distillate Fuel is assumed to have 0.015% Fuel-Bound Nitrogen, or less.
FBN amounts greater than 0.015% will add to the reported NOx value.
IPS- Version Code - 3.8.0/177E0/3.8.0/PG7241-05A-0808B
MCMURRMI 10/7/2008 7:43 General Electric Proprietary Information