Special Copy
(Includes Compact Disk)

For Technical Reviewer

Traffic Impact Study
Technical Appendix

Kincora

Loudoun County, Virginia

October 23, 2008

Prepared For:

MA Dulles Real Estate Investor, LLC
c/o TRITEC Real Estate Company, Inc.
Stony Brook Technology Center
45 Research Way
Suite 100
East Setauket, New York 11733

Prepared By:

Gorove/Slade
Associates, Inc.

TECHNICAL APPENDIX TABLE OF CONTENTS

APPENDIX A

Scoping Document

APPENDIX B

Existing (2008) Turning Movement Counts and Projected Growth Rates

APPENDIX C

Level of Service Definitions

APPENDIX D-1

Intersection Capacity Analysis Results – Existing Conditions (2008)

APPENDIX D-2

Intersection Capacity Analysis Results – Interim Build-Out Year (2011) Conditions without Development

APPENDIX D-3

Intersection Capacity Analysis Results – Interim Build-Out Year (2011) Conditions with Development

APPENDIX D-4

Intersection Capacity Analysis Results – Interim Build-Out Year (2015) Conditions without Development

APPENDIX D-5

Intersection Capacity Analysis Results – Interim Build-Out Year (2015) Conditions with Development

APPENDIX D-6

Intersection Capacity Analysis Results – Full Build-Out Year (2025) Conditions without Development

APPENDIX D-7

Intersection Capacity Analysis Results – Full Build-Out Year (2025) Conditions with Development

APPENDIX D-8

Intersection Capacity Analysis Results –Build-Out Plus Five (2030) Conditions with Development

APPENDIX E

Warrant Analysis Results

APPENDIX F

Observed Trip Generation Rates for Baseball Stadium

APPENDIX G

Existing Rerouted Traffic Due to 2011 and 2015 Planned Roadway Improvements

APPENDIX H

Other Approved 2011 Background Developments (Location Map and Trips Generated)

APPENDIX I

Other Approved 2015 Background Developments (Location Map and Trips Generated)

APPENDIX J

Other Approved 2025 Background Developments (Location Map and Trips Generated)

APPENDIX A

SCOPING DOCUMENT

VDOT Virginia Department of Transportation

PRE-SCOPE OF WORK MEETING FORM

Information on the Project
Traffic Impact Analysis Base Assumptions

The locality will need to send this form to the project applicant at least two (2) weeks prior to the scheduled scope of work meeting on the proposed project. The applicant is responsible for having this form completed and returned to VDOT and the locality no less than three (3) business days prior to the Meeting. If a completed form is not received by this deadline, the scope of work meeting may be postponed.

Contact Information	
Consultant Name: Tele: E-mail:	Christopher M. Tacinelli, Gorove/Slade Associates, Inc. 703-787-9595 cmt@goroveslade.com
Developer/Owner Name: Tele: E-mail:	Norton Scott LLC 703-738-8736 ext. 101 mike@nortonscott.com

Project Information				
Project Name:	Kincora			
Project Location: (Attach regional and site specific location map)	The project is located north of Severn Way (Route 847), south of Harry Byrd Highway (Route 7), east of Loudoun County Parkway (Route 607) and west of Sully Road (Route 28).			
Project Description: Including type of application (rezoning, subdivision, site plan), acreage, business square ft, number of dwelling units, access location, etc. Attach additional sheet if necessary)	The project is a rezoning application to develop a currently undeveloped parcel into a mixed-use center. The property is currently zoned PD-IP. Access points serving the proposed development will be along the future Pacific Boulevard.			
Locality/County:	Loudoun County, Virginia			
Proposed Use: (Check all that apply; attach additional pages as necessary)	Residential ☐	Commercial ☐	Mixed Use ★	Other ☐
	Residential # of Units: 1,750 Units (ITE Code 230) **Commercial Use:** 4.0 Million SF (ITE Code 750) **Other Use:** Outdoor Sports and Entertainment Facility – Evening and Weekend Activity		**Hotel Use:** 720 Rooms (ITE Code 310) **Retail Use:** 470,000 GSF (ITE Code 820) *Note: The development #'s are subject to change slightly	

Traffic Impact Analysis Assumptions

Study Period	Existing Year: 2008	Phase 1 Build-out Year: 2011	Phase 2 Build-out Year: 2015	Phase 3 Build-out Year: 2025
Study Area Boundaries (Attach map)	North: Harry Byrd Highway (Rte 7)		South: Severn Way (Rte 847)	
	East: Loudoun County Parkway (Rte 607)		West: Sully Road (Rte 28)	
External Factors That Could Affect Project (Planned road improvements, other nearby developments)	1. Graphic showing other planned road improvements in the area is attached 2. Graphic showing other approved developments is also attached.			
Consistency With Comprehensive Plan	Yes			
Available Traffic Data (Historical, forecasts)	VDOT AADT Data, Existing Traffic Counts (2008)			

Trip Distribution (Attach sketch) **PLEASE REFER TO TABLE 1**					
	Road Name:	N: ___%	S: ___%	E: ___%	W: ___%
	Road Name:	N: ___%	S: ___%	E: ___%	W: ___%
	Road Name:	N: ___%	S: ___%	E: ___%	W: ___%
	Road Name:	N: ___%	S: ___%	E: ___%	W: ___%

Annual Vehicle Trip Growth Rate:	• 4% per year on Rte 28 • 1% per year on Rte 640, Rte 625 & Rte 637	Peak Period for Study (circle all that apply)	(AM) (PM) Sat

Study Intersections and/or Road Segments (Attach additional sheets as necessary)		
	1. Rte 7 & Ashburn Village Blvd.	13. Nokes Blvd. & Atlantic Blvd.
	2. Rte 7 & Lexington Dr.	14. Nokes Blvd. & Cascades Pkwy.
	3. Rte 7 & Loudoun County Pkwy.	15. Route 28 and Severn Way
	4. Rte 7 & Richfield Way	16. Potomac View Rd. & Woodland Rd.
	5. Rte 7 & City Center Blvd.	17. Route 28 & Steeplechase Dr.
	6. Rte 7 & Palisade Pkwy.	18. Farmwell Rd. & Ashburn Village Blvd.
	7. Algonkian Pkwy. & Countryside Blvd.	19. Farmwell Rd. & Waxpool Rd.
	8. Algonkian Pkwy. & Winding Road	20. Waxpool Rd. & Loudoun County Pkwy
	9. Rte 28 & Dulles Center Blvd.	21. Waxpool Rd. & Pacific Blvd.

	10. Ashburn Village Blvd. & Gloucester Pkwy.	22. Church Rd. & Davis Dr.
	11. Loudoun County Pkwy. & Smith Switch Rd.	23. Church Rd. & Potomac View Rd.
	12. Rte 28 & Nokes Blvd.	24. All future site driveways
Trip Adjustment Factors	Internal allowance: ★ Yes ☐ No Reduction: ITE	Pass-by allowance: ★ Yes ☐ No Reduction: Chapter 527 Guidelines
	TDM Reduction: ★ Yes ☐ No	
Software Methodology	★ Synchro ☐ HCS (v.2000/+) ☐ aaSIDRA ☐ CORSIM ☐ Other	
Traffic Signal Proposed or Affected (Analysis software to be used, progression speed, cycle length)	Please see attached figure showing existing lane configurations.	
Improvement(s) Assumed or to be Considered	Please see attached graphic.	
Background Traffic Studies Considered	- Kincora Traffic Study - Commonwealth Center - One Loudoun - University Center - Dulles Town Center	
Plan Submission	☐ Master Development Plan (MDP) ★ Generalized Development Plan (GDP) ★ Preliminary/Sketch Plan ☐ Other Plan type (Final Site, Subd. Plan)	
Additional Issues to be addressed	☐ Queuing analysis ☐ Actuation/Coordination ☐ Weaving analysis ☐ Merge analysis ☐ Bike/Ped Accommodations ★ Intersection(s) ★ TDM Measures ☐ Existing Transit Facilities in the area	

NOTES on ASSUMPTIONS:

1. Synchro files will be obtained from VDOT
2. Existing factors, such as peak hour factors, will be used for existing scenarios. A peak hour factor of 0.95 will be used for all future scenarios.
3. Will provide information for VDOT's Land Track system, including identification of the route name and number where the main entrance is located and the ADT of that road.

AGREED: _____ DATE: 07/23/2008
Applicant or Consultant

PRINT NAME: Chris Tacinelli, Gorove/Slade Associates, Inc.
Applicant or Consultant

SIGNED: _____ DATE: _____
VDOT Representative

PRINT NAME: _____
VDOT Representative

SIGNED: _____ DATE: _____
Local Government Representative

PRINT NAME: _____
Local Government Representative

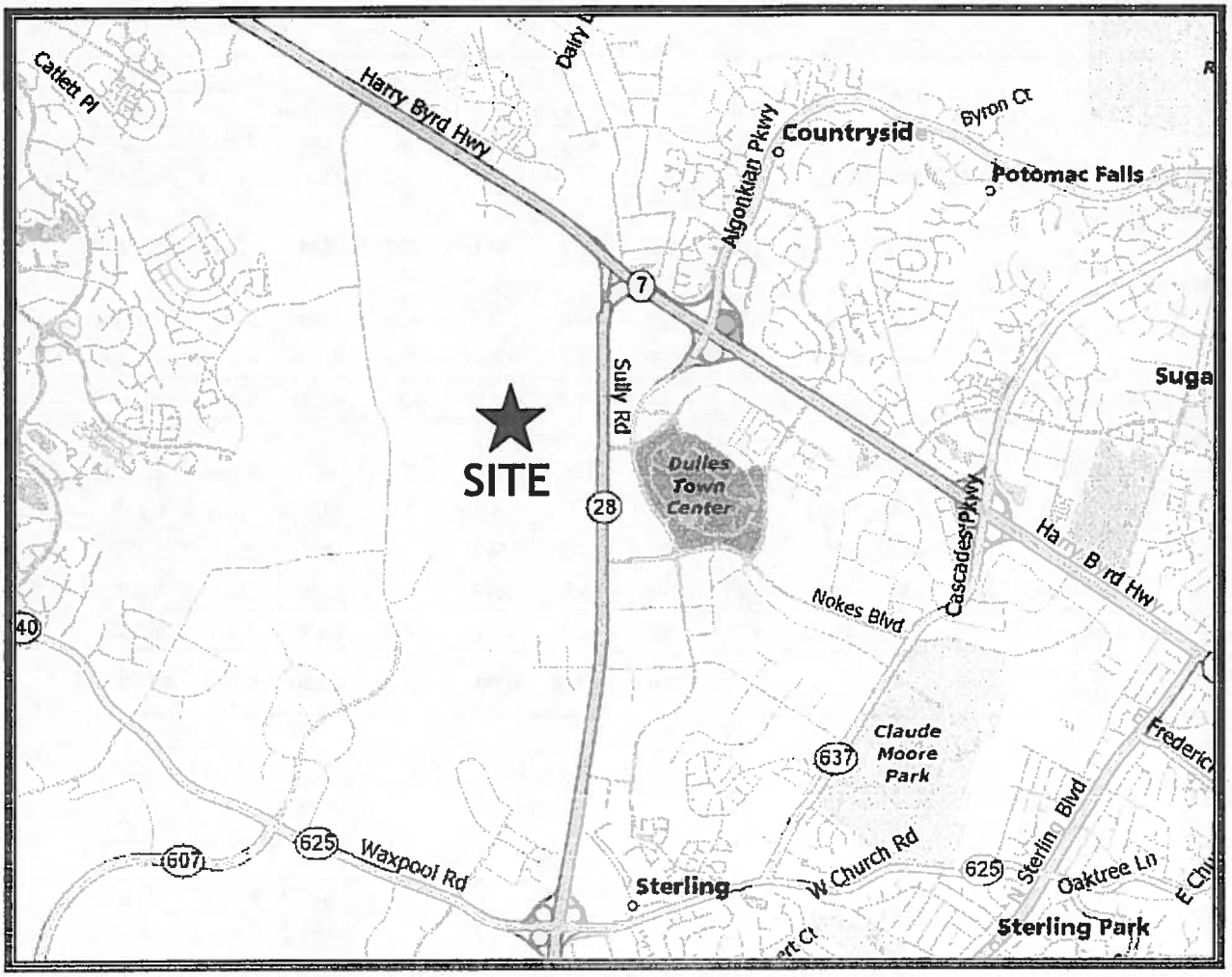

Figure 1: Area Map

Peak Hour of Generator

Land Use	ITE Code	Size	Units	Weekday						
				AM Peak Hour			PM Peak Hour			Daily
				In	Out	Total	In	Out	Total	Total
PROPOSED PLAN - MIXED USE DEVELOPMENT										
Residential Development										
Condos/Multifamily	230	1,750	DU	**98**	**443**	**541**	**406**	**228**	**634**	**15,225**
Office Development										
Hotel	310	720	Rooms	173	140	313	235	169	404	6,071
Office Park	750	4,000.0	kSF	4,276	528	4,804	693	4,254	4,947	42,090
Subtotal Office Development				**4,449**	**668**	**5,117**	**928**	**4,423**	**5,351**	**48,161**
Retail Development										
Shopping Center	820	400.0	kSF	220	140	360	751	813	1,564	16,722
Health/Fitness Club	492	35.0	kSF	19	24	43	73	69	142	1,153
Drive-in Banks	912	16.0	kSF	201	193	394	437	419	856	3,175
High-Turnover (Sit-Down) Restaurants	932	40.0	kSF	282	260	542	414	338	752	5,086
Subtotal Retail Development		**491.0**	**kSF**	**722**	**617**	**1,339**	**1,675**	**1,639**	**3,314**	**26,136**
TOTAL PROPOSED SITE TRIPS (WITHOUT REDUCTIONS)				**5,269**	**1,728**	**6,997**	**3,009**	**6,290**	**9,299**	**89,522**

Peak Hour of Adjacent Street Traffic

Land Use	ITE Code	Size	Units	Weekday						
				AM Peak Hour			PM Peak Hour			Daily
				In	Out	Total	In	Out	Total	Total
PROPOSED PLAN - MIXED USE DEVELOPMENT										
Residential Development										
Condos/Multifamily	230	1,750	DU	**87**	**423**	**510**	**422**	**207**	**629**	**15,225**
Office Development										
Hotel	310	720	Rooms	289	184	473	226	199	425	6,071
Office Park	750	4,000.0	kSF	4,276	528	4,804	693	4,254	4,947	42,090
Subtotal Office Development				**4,565**	**712**	**5,277**	**919**	**4,453**	**5,372**	**48,161**
Retail Development										
Shopping Center	820	400.0	kSF	220	140	360	751	813	1,564	16,722
Health/Fitness Club	492	35.0	kSF	19	24	43	73	69	142	1,153
Drive-in Banks	912	16.0	kSF	111	87	198	366	366	732	3,175
High-Turnover (Sit-Down) Restaurants	932	40.0	kSF	240	221	461	267	170	437	5,086
Subtotal Retail Development		**491.0**	**kSF**	**590**	**472**	**1,062**	**1,457**	**1,418**	**2,875**	**26,136**
TOTAL PROPOSED SITE TRIPS (WITHOUT REDUCTIONS)				**5,242**	**1,607**	**6,849**	**2,798**	**6,078**	**8,876**	**89,522**

Table 1: Direction of Approach per Land Use

Approach	Office	Retail	Residential
From the North	0%	2%	0%
From the South	40%	18%	50%
From the East	20%	10%	30%
From the West	40%	70%	20%
TOTAL	100%	100%	100%

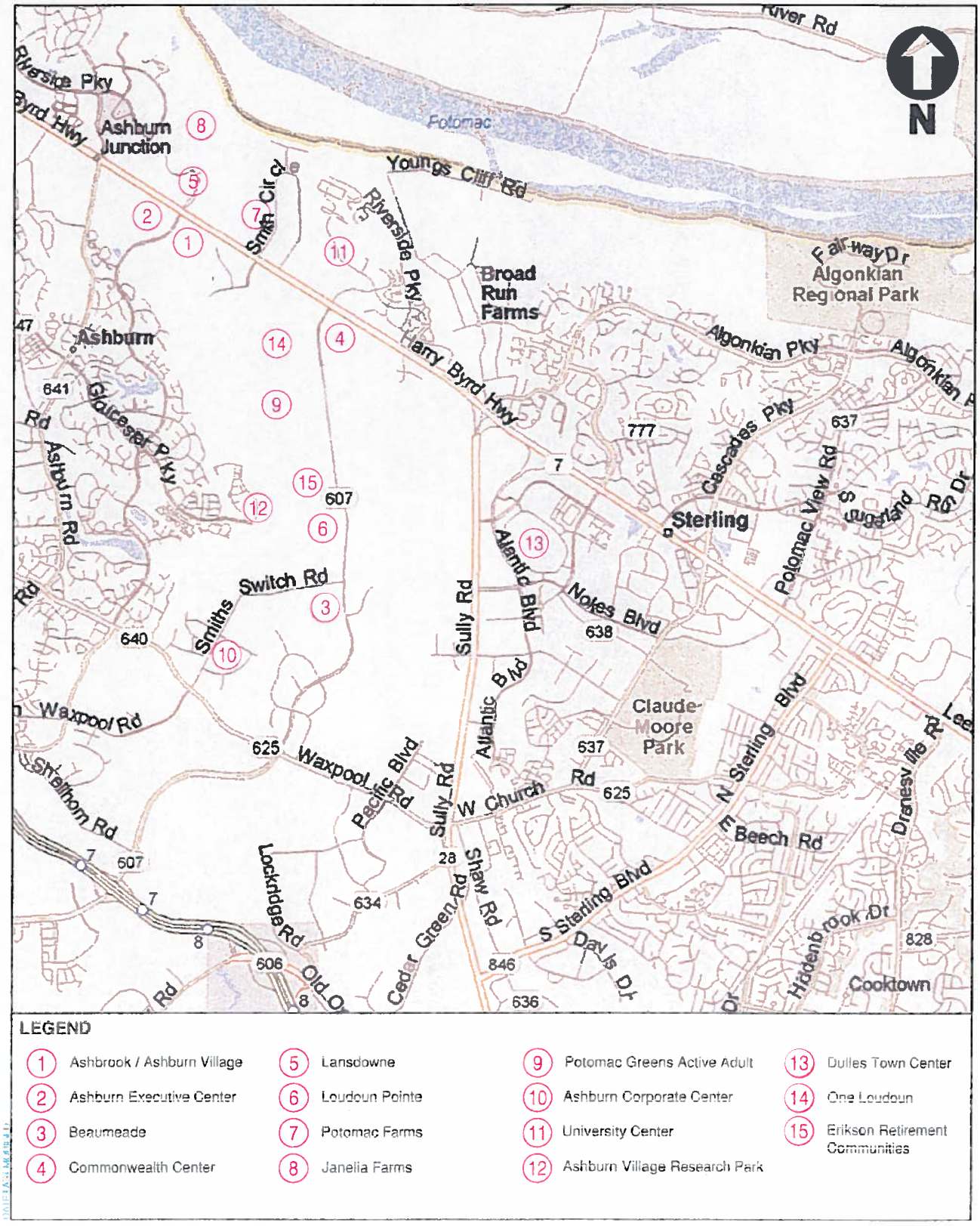

LEGEND

1 Ashbrook / Ashburn Village	5 Lansdowne	9 Potomac Greens Active Adult	13 Dulles Town Center
2 Ashburn Executive Center	6 Loudoun Pointe	10 Ashburn Corporate Center	14 One Loudoun
3 Beaumeade	7 Potomac Farms	11 University Center	15 Erikson Retirement Communities
4 Commonwealth Center	8 Janelia Farms	12 Ashburn Village Research Park	

Figure 7
Location of Other Approved Background Developments

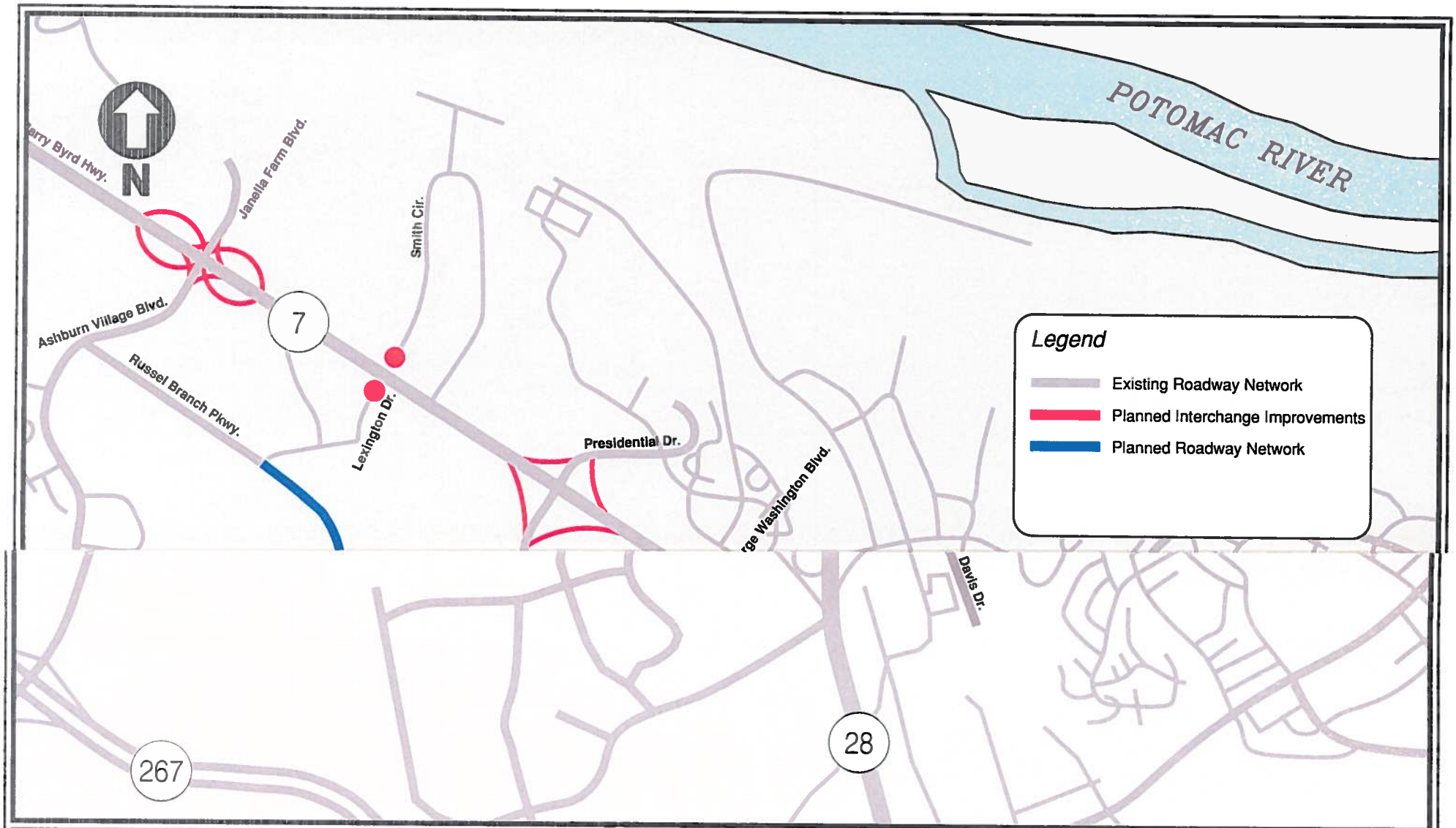

Kincora Development

Figure 3: Future Interchange, Cul De Sac Improvements & Planned Roadways by Others

November 8, 2007

GOROVE / SLADE ASSOCIATES, Inc.
TRANSPORTATION, TRAFFIC, and PARKING
1140 Connecticut Avenue NW / Suite 700 / Washington, DC 20036 / (202) 296-8625
3914 Centreville Road / Suite 330 / Chantilly, VA 20151 / (703) 787-9595
825 Chicago Avenue / Suite D / Evanston, IL 60202 / (847) 733-1390
Foster Plaza 5 / 651 Holiday Drive / Suite 300 / Pittsburgh, PA 15220 / (703) 787-9915

APPENDIX B

EXISTING (2008) TURNING MOVEMENT COUNTS AND PROJECTED GROWTH RATES

Gorove/Slade Associates

Project Name :	Kincora
Project # :	2041-001
Location	Loudoun County
Data Source:	Gorove/Slade Associates

Intersection: Ashburn Village Boulevard and Farmwell Road

AM PEAK

			Southbound Ashburn				Westbound Farmwell				Northbound Ashburn				Eastbound Farmwell			
		Movement:	Right	Thru	Left	Peds	Right	Thru	Left	Peds	Right	Thru	Left	Peds	Right	Thru	Left	Peds
6:00 AM	to	6:15 AM	7	31	72	0	14	25	36	0								
6:15 AM	to	6:30 AM	1	64	145	0	10	37	8	0	22	10	2	0	21	179	5	1
6:30 AM	to	6:45 AM	25	52	323	0	33	93	72	0	18	10	5	0	10	297	6	1
6:45 AM	to	7:00 AM	55	42	265	1	48	66	17	0	36	16	4	0	31	330	13	0
7:00 AM	to	7:15 AM	23	68	226	0	51	82	12	0	30	27	2	0	31	272	12	0
7:15 AM	to	7:30 AM	58	70	257	1	52	63	11	0	34	24	15	0	17	266	17	0
7:30 AM	to	7:45 AM	62	133	310	0	61	100	23	0	31	32	7	0	62	344	11	0
7:45 AM	to	8:00 AM	74	167	166	0	56	88	28	2	22	52	11	0	64	248	21	0
8:00 AM	to	8:15 AM	94	105	172	2	58	94	31	0	16	53	14	0	67	291	35	0
8:15 AM	to	8:30 AM	97	134	150	0	59	100	20	0	36	52	20	0	54	255	35	0
8:30 AM	to	8:45 AM	137	129	186	0	43	80	24	0	36	70	17	0	67	274	29	0
8:45 AM	to	9:00 AM	45	119	150	0	42	94	26	0	23	62	10	0	59	221	44	0

PM PEAK

			Southbound Ashburn				Westbound Farmwell				Northbound Ashburn				Eastbound Farmwell			
		Movement:	Right	Thru	Left	Peds	Right	Thru	Left	Peds	Right	Thru	Left	Peds	Right	Thru	Left	Peds
4:00 PM	to	4:15 PM	23	49	97	1	238	218	36	51	30	54	14	0	52	185	56	0
4:15 PM	to	4:30 PM	33	70	128	0	206	284	42	7	22	107	38	0	34	143	32	0
4:30 PM	to	4:45 PM	31	82	96	1	167	239	31	13	30	86	17	0	42	145	45	0
4:45 PM	to	5:00 PM	15	63	67	0	116	259	47	2	31	120	26	0	57	145	54	0
5:00 PM	to	5:15 PM	34	84	102	0	238	342	55	0	36	122	24	0	63	140	59	0
5:15 PM	to	5:30 PM	18	93	118	2	238	306	64	3	31	145	35	0	43	160	63	0
5:30 PM	to	5:45 PM	33	123	156	0	255	371	52	0	21	150	36	0	42	136	46	0
5:45 PM	to	6:00 PM	43	94	93	0	305	457	45	0	18	132	32	0	46	167	46	0
6:00 PM	to	6:15 PM	50	118	162	0	236	368	43	0	27	113	37	0	33	172	72	0
6:15 PM	to	6:30 PM	45	88	107	0	252	376	58	0	14	114	41	0	49	156	45	0
6:30 PM	to	6:45 PM	28	88	116	0	241	305	58	0	21	110	50	0	39	183	36	14
6:45 PM	to	7:00 PM	33	125	65	0	289	287	56	0	23	147	37	0	26	139	37	2

PEAK HOURS

			Southbound Ashburn				Westbound Farmwell				Northbound Ashburn				Eastbound Farmwell			
		Movement:	Right	Thru	Left	Peds	Right	Thru	Left	Peds	Right	Thru	Left	Peds	Right	Thru	Left	Peds
AM INTERSECTION PEAK HOUR																		
7:30 AM	to	8:30 AM	327	539	798	2	234	382	102	2	105	189	52	0	247	1138	102	0
PM INTERSECTION PEAK HOUR																		
5:30 PM	to	6:30 PM	171	423	518	0	1043	1572	198	0	80	509	146	0	170	631	209	0
AM SYSTEM PEAK HOUR																		
7:45 AM	to	8:45 AM	402	535	674	2	216	362	103	2	110	227	62	0	252	1068	120	0
PM SYSTEM PEAK HOUR																		
5:00 PM	to	6:00 PM	128	394	469	2	1036	1476	216	3	106	549	127	0	194	603	214	0

PEAK HOUR FACTORS

	Southbound Ashburn				Westbound Farmwell				Northbound Ashburn				Eastbound Farmwell			
	Right	Thru	Left	Peds	Right	Thru	Left	Peds	Right	Thru	Left	Peds	Right	Thru	Left	Peds
AM PEAK HOUR	0.73	0.80	0.91	N/A	0.92	0.91	0.83	N/A	0.76	0.81	0.78	N/A	0.94	0.92	0.86	N/A
PM PEAK HOUR	0.74	0.80	0.75	N/A	0.85	0.81	0.84	N/A	0.74	0.92	0.88	N/A	0.77	0.90	0.85	N/A

Overall AM PEAK HOUR FACTOR = 0.95

AM Period Intersection Volume: 10478

Overall PM PEAK HOUR FACTOR = 0.93

PM Period Intersection Volume: 15029

Date of Counts: Thursday, May 22, 2008

AM Weather Conditions: Mild, Clear

PM Weather Conditions: Mild, Clear

AM INTERSECTION PEAK VOLUMES

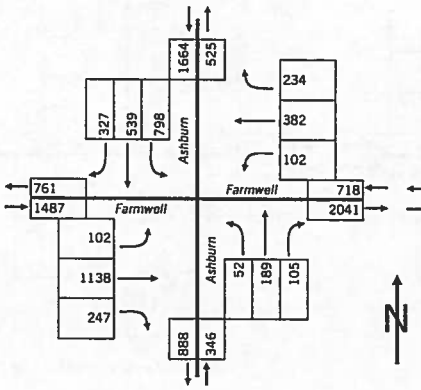

AM SYSTEM PEAK VOLUMES

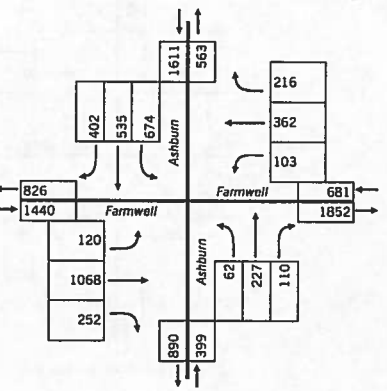

PM INTERSECTION PEAK VOLUMES

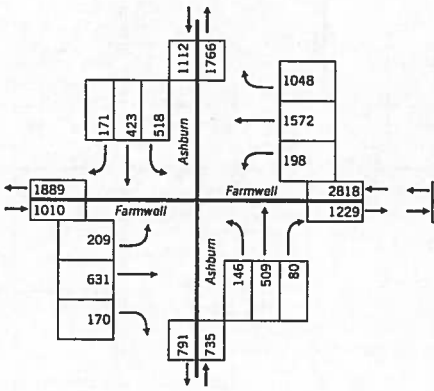

PM SYSTEM PEAK VOLUMES

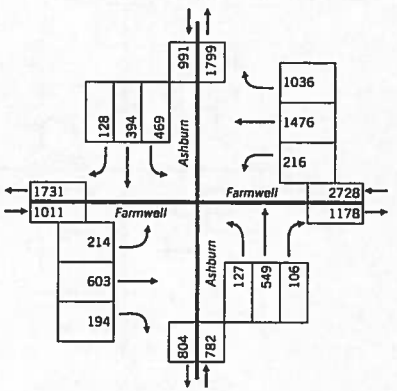

Gorove/Slade Associates

Project Name :	Kincora
Project #	2041.001
Location :	Loudoun County
Data Source	Gorove/Slade Associates

Intersection: Loudoun County Parkway & Smith Switch Road

AM PEAK																	
Direction:			Southbound				Westbound				Northbound				Eastbound			
Roadway:			LCP								LCP				Smith Switch			
Movement:			Right	Thru	Left	Peds	Right	Thru	Left	Peds	Right	Thru	Left	Peds	Right	Thru	Left	Peds
6:00 AM	to	6:15 AM	15	10	0	0					0	29	12	0	0	0	0	0
6:15 AM	to	6:30 AM	32	83	0	0					0	40	14	0	1	0	1	0
6:30 AM	to	6:45 AM	16	65	0	0					0	37	29	0	1	0	4	0
6:45 AM	to	7:00 AM	23	96	0	0					0	45	26	0	3	0	11	0
7:00 AM	to	7:15 AM	10	99	1	0					1	56	15	0	1	0	7	0
7:15 AM	to	7:30 AM	1	101	4	0					0	57	8	0	6	0	4	0
7:30 AM	to	7:45 AM	0	98	0	0					17	38	0	0	3	0	9	0
7:45 AM	to	8:00 AM	7	154	4	0					0	81	3	0	6	0	7	0
8:00 AM	to	8:15 AM	5	167	0	0					0	69	5	0	8	0	5	0
8:15 AM	to	8:30 AM	8	148	0	0					0	90	4	0	2	0	12	0
8:30 AM	to	8:45 AM	2	128	0	0					0	60	1	0	4	0	6	0
8:45 AM	to	9:00 AM	2	138	0	0					0	52	3	0	1	0	8	0

PM PEAK																		
Direction:			Southbound				Westbound				Northbound				Eastbound			
Roadway:			LCP								LCP				Smith Switch			
Movement:			Right	Thru	Left	Peds	Right	Thru	Left	Peds	Right	Thru	Left	Peds	Right	Thru	Left	Peds
4:00 PM	to	4:15 PM	2	86	1	0					2	109	4	0	8	0	23	0
4:15 PM	to	4:30 PM	6	61	0	0					0	101	2	0	5	0	2	0
4:30 PM	to	4:45 PM	4	108	0	0					0	132	1	0	3	0	18	0
4:45 PM	to	5:00 PM	2	66	0	0					0	145	2	0	2	0	12	0
5:00 PM	to	5:15 PM	9	64	0	0					0	241	5	0	2	0	6	0
5:15 PM	to	5:30 PM	1	73	0	0					0	204	2	0	3	0	10	0
5:30 PM	to	5:45 PM	1	75	0	0					0	252	2	0	4	0	17	0
5:45 PM	to	6:00 PM	8	89	0	0					0	181	1	0	10	0	14	0
6:00 PM	to	6:15 PM	2	65	0	0					0	254	1	0	4	0	11	0
6:15 PM	to	6:30 PM	1	51	0	0					0	183	2	0	1	0	9	0
6:30 PM	to	6:45 PM	1	74	0	0					0	115	1	0	2	0	11	0
6:45 PM	to	7:00 PM	0	50	0	0					0	102	0	0	1	0	6	0

PEAK HOURS																		
Direction:			Southbound				Westbound				Northbound				Eastbound			
Roadway:			LCP								LCP				Smith Switch			
Movement:			Right	Thru	Left	Peds	Right	Thru	Left	Peds	Right	Thru	Left	Peds	Right	Thru	Left	Peds
AM INTERSECTION PEAK HOUR																		
7:45 AM	to	8:45 AM	22	597	4	0	0	0	0	0	0	300	13	0	20	0	30	0
PM INTERSECTION PEAK HOUR																		
5:15 PM	to	6:15 PM	12	302	0	0	0	0	0	0	0	891	6	0	21	0	52	0
AM SYSTEM PEAK HOUR																		
7:45 AM	to	8:45 AM	22	597	4	0	0	0	0	0	0	300	13	0	20	0	30	0
PM SYSTEM PEAK HOUR																		
5:00 PM	to	6:00 PM	19	301	0	0	0	0	0	0	0	878	10	0	19	0	47	0

PEAK HOUR FACTORS	Southbound LCP				Westbound				Northbound LCP				Eastbound Smith Switch			
	Right	Thru	Left	Peds	Right	Thru	Left	Peds	Right	Thru	Left	Peds	Right	Thru	Left	Peds
AM PEAK HOUR	0.69	0.89	0.25	N/A	0.00	0.00	0.00	N/A	0.00	0.83	0.65	N/A	0.63	0.00	0.63	N/A
PM PEAK HOUR	0.53	0.85	0.00	N/A	0.00	0.00	0.00	N/A	0.00	0.87	0.50	N/A	0.48	0.00	0.69	N/A

Overall AM PEAK HOUR FACTOR = 0.93

Overall PM PEAK HOUR FACTOR = 0.91

AM Period Intersection Volume: 2339

PM Period Intersection Volume: 3128

Date of Counts: Thursday, May 22, 2008

AM Weather Conditions:

PM Weather Conditions:

AM INTERSECTION PEAK VOLUMES

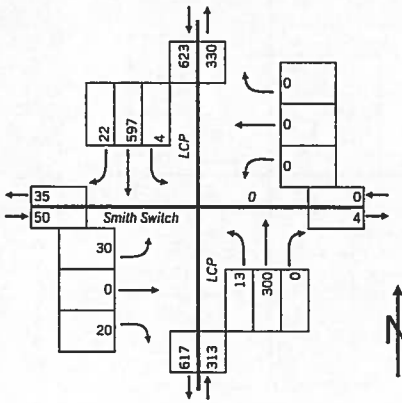

AM SYSTEM PEAK VOLUMES

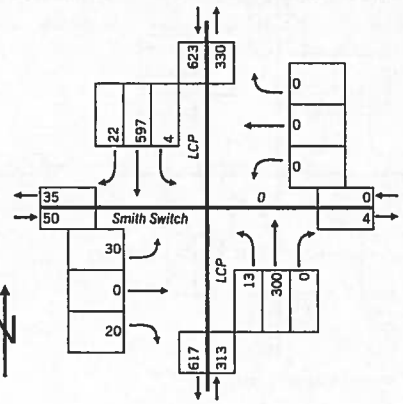

PM INTERSECTION PEAK VOLUMES

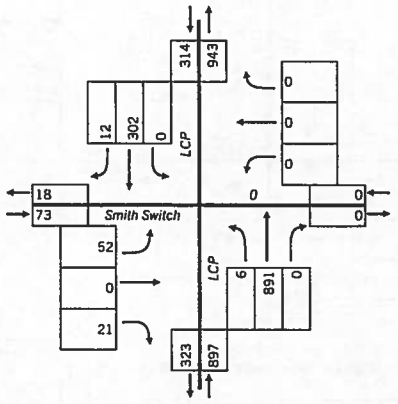

PM SYSTEM PEAK VOLUMES

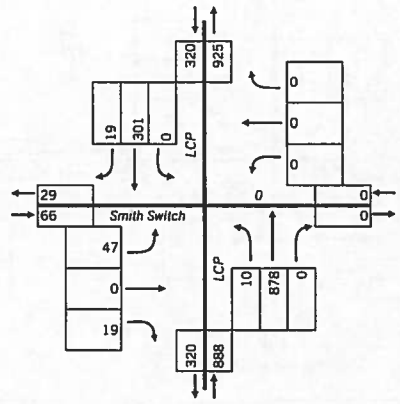

Gorove/Slade Associates

Project Name:	Kincora
Project Number:	2041-001
Location:	Loudoun County
Data Source:	Gorove/Slade Associates

Intersection: Loudoun County Parkway and Waxpool Road

AM PEAK

			Southbound LCP				Westbound Waxpool				Northbound LCP				Eastbound Waxpool			
			Right	Thru	Left	Peds	Right	Thru	Left	Peds	Right	Thru	Left	Peds	Right	Thru	Left	Peds
6:00 AM	to	6:15 AM	2	6	26	0	63	114	51	0	94	17	7	0	6	349	11	0
6:15 AM	to	6:30 AM	2	4	68	0	47	129	47	0	127	24	11	0	2	387	9	0
6:30 AM	to	6:45 AM	2	10	55	0	81	189	43	0	195	27	6	0	3	532	11	0
6:45 AM	to	7:00 AM	1	11	55	0	89	181	84	0	199	24	11	0	3	597	8	0
7:00 AM	to	7:15 AM	2	7	68	0	97	160	110	0	249	46	9	0	1	526	8	0
7:15 AM	to	7:30 AM	6	19	95	0	89	167	91	0	255	45	7	0	4	579	14	0
7:30 AM	to	7:45 AM	2	19	137	0	70	161	79	0	308	78	10	0	1	481	13	0
7:45 AM	to	8:00 AM	5	9	116	0	112	213	95	0	321	75	20	0	0	502	16	0
8:00 AM	to	8:15 AM	3	21	112	0	97	213	93	0	282	83	17	0	1	548	9	0
8:15 AM	to	8:30 AM	31	28	132	0	109	223	100	0	298	88	10	0	1	487	22	0
8:30 AM	to	8:45 AM	23	33	114	0	76	203	114	0	352	85	23	0	7	464	12	0
8:45 AM	to	9:00 AM	25	31	106	0	82	246	77	0	288	68	24	0	4	518	26	0

PM PEAK

			Southbound LCP				Westbound Waxpool				Northbound LCP				Eastbound Waxpool			
			Right	Thru	Left	Peds	Right	Thru	Left	Peds	Right	Thru	Left	Peds	Right	Thru	Left	Peds
4:00 PM	to	4:15 PM	51	44	94		103	561	106		164	27			12	293	29	
4:15 PM	to	4:30 PM	60	41	73	0	108	618	130	0	138	20	11	0	22	298	34	0
4:30 PM	to	4:45 PM	60	57	61	0	114	658	199	0	135	47	24	0	27	376	34	0
4:45 PM	to	5:00 PM	61	39	97	0	135	699	261	0	138	38	20	0	26	319	28	0
5:00 PM	to	5:15 PM	70	53	82	0	141	702	260	0	155	35	51	0	28	321	26	0
5:15 PM	to	5:30 PM	62	48	62	0	180	674	280	0	176	52	22	0	34	347	19	0
5:30 PM	to	5:45 PM	69	52	67	0	177	703	313	0	175	43	30	0	32	302	33	0
5:45 PM	to	6:00 PM	66	54	82	0	143	710	302	0	151	50	23	0	29	307	28	0
6:00 PM	to	6:15 PM	38	54	60	0	178	703	269	0	165	29	23	0	30	332	24	0
6:15 PM	to	6:30 PM	35	45	60	0	155	698	277	0	132	31	15	0	24	311	31	0
6:30 PM	to	6:45 PM	44	45	74	0	92	571	239	0	153	17	22	0	35	298	20	0
6:45 PM	to	7:00 PM	33	40	37	0	91	558	207	0	135	20	15	0	19	303	20	0

PEAK HOURS

			Southbound LCP				Westbound Waxpool				Northbound LCP				Eastbound Waxpool			
			Right	Thru	Left	Peds	Right	Thru	Left	Peds	Right	Thru	Left	Peds	Right	Thru	Left	Peds
AM INTERSECTION PEAK HOUR																		
8:00 AM	to	9:00 AM	82	113	464	0	364	885	384	0	1220	322	74	0	13	2017	69	0
PM INTERSECTION PEAK HOUR																		
5:00 PM	to	6:00 PM	267	207	293	0	641	2789	1155	0	657	180	126	0	123	1277	106	0
AM SYSTEM PEAK HOUR																		
7:45 AM	to	8:45 AM	62	91	474	0	394	852	402	0	1253	331	70	0	9	2001	59	0
PM SYSTEM PEAK HOUR																		
5:00 PM	to	6:00 PM	267	207	293	0	641	2789	1155	0	657	180	126	0	123	1277	106	0

PEAK HOUR FACTORS

	Southbound LCP				Westbound Waxpool				Northbound LCP				Eastbound Waxpool			
	Right	Thru	Left	Peds	Right	Thru	Left	Peds	Right	Thru	Left	Peds	Right	Thru	Left	Peds
AM PEAK HOUR	0.50	0.69	0.90	N/A	0.88	0.96	0.83	N/A	0.89	0.94	0.76	N/A	0.32	0.91	0.67	N/A
PM PEAK HOUR	0.95	0.96	0.89	N/A	0.89	0.98	0.92	N/A	0.93	0.87	0.62	N/A	0.90	0.92	0.80	N/A

Overall AM PEAK HOUR FACTOR = 0.98

Overall PM PEAK HOUR FACTOR = 0.98

AM Period Intersection Volume: 15524

PM Period Intersection Volume: 21318

Date of Counts: Thursday, May 22, 2008

AM Weather Conditions:

PM Weather Conditions:

AM INTERSECTION PEAK VOLUMES

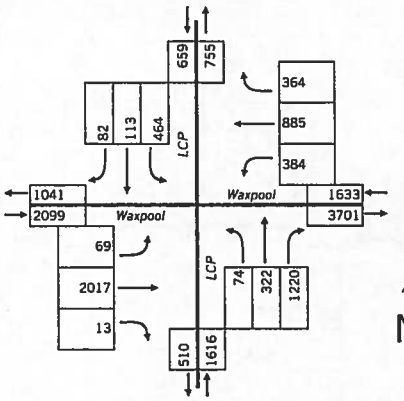

AM SYSTEM PEAK VOLUMES

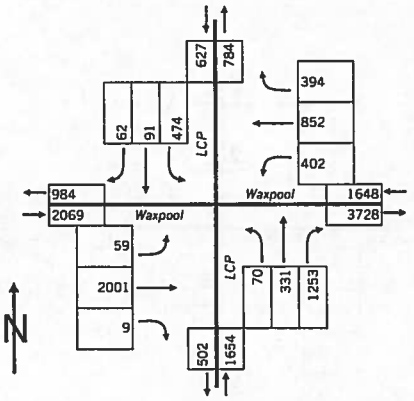

PM INTERSECTION PEAK VOLUMES

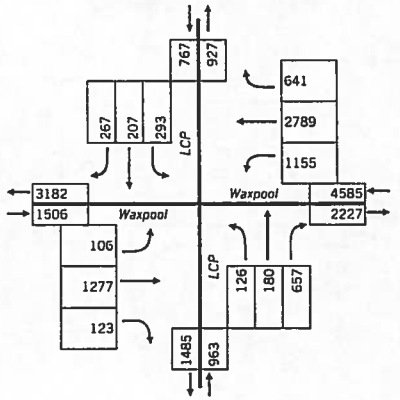

PM SYSTEM PEAK VOLUMES

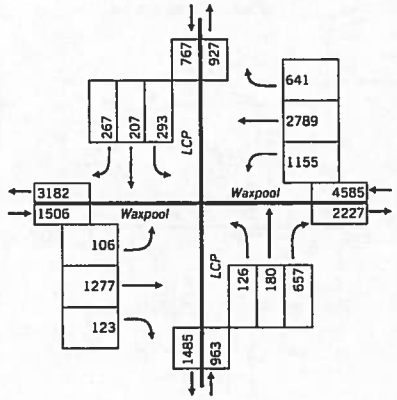

Gorove/Slade Associates

Project Name :	Kincora
Project Number:	2041-001
Location:	Loudoun County
Data Source:	Gorove/Slade Associates

Intersection:	Route 28 and Severn Way															
AM PEAK																
Direction:	Southbound				Westbound				Northbound				Eastbound			
Roadway:	Rte 28				Severn Way				Rte 28				Severn Way			
Movement:	Right	Thru	Left	Peds	Right	Thru	Left	Peds	Right	Thru	Left	Peds	Right	Thru	Left	Peds
6:00 AM to 6:15 AM	1	325	4	0	7	3	6	0	15	103	23	0	7	2	1	0
6:15 AM to 6:30 AM	3	501	9	0	6	4	7	0	31	242	17	0	7	0	1	0
6:30 AM to 6:45 AM	5	617	12	0	6	1	10	0	58	351	25	0	10	2	0	0
6:45 AM to 7:00 AM	3	689	24	0	11	6	16	0	79	352	31	0	9	2	1	0
7:00 AM to 7:15 AM	0	771	9	1	16	5	19	0	52	295	24	0	21	0	1	0
7:15 AM to 7:30 AM	9	836	27	1	9	6	29	0	36	381	34	0	6	2	2	0
7:30 AM to 7:45 AM	13	733	33	2	15	10	33	0	62	347	51	0	7	0	0	0
7:45 AM to 8:00 AM	15	917	37	0	15	16	19	0	71	399	66	0	11	4	1	0
8:00 AM to 8:15 AM	28	832	28	0	14	14	27	0	45	427	63	0	13	1	3	0
8:15 AM to 8:30 AM	29	776	68	0	11	13	20	0	50	389	121	0	14	2	2	0
8:30 AM to 8:45 AM	55	701	16	1	19	15	59	0	51	537	103	0	13	0	0	0
8:45 AM to 9:00 AM	60	717	8	0	18	11	43	0	52	626	140	0	13	2	2	0
PM PEAK																
Direction:	Southbound				Westbound				Northbound				Eastbound			
Roadway:	Rte 28				Severn Way				Rte 28				Severn Way			
Movement:	Right	Thru	Left	Peds	Right	Thru	Left	Peds	Right	Thru	Left	Peds	Right	Thru	Left	Peds
4:00 PM to 4:15 PM	0	516	22	0	48	1	48	0	86	692	11	0	52	3	11	0
4:15 PM to 4:30 PM	0	449	46	0	47	8	70	0	78	678	8	0	45	5	19	0
4:30 PM to 4:45 PM	1	524	45	0	49	7	51	0	81	785	7	0	71	5	20	0
4:45 PM to 5:00 PM	0	452	31	0	54	10	60	0	96	774	6	0	65	6	24	0
5:00 PM to 5:15 PM	3	548	55	0	69	6	68	0	74	995	8	0	170	12	64	0
5:15 PM to 5:30 PM	3	510	22	0	66	6	71	0	73	941	10	0	159	11	60	0
5:30 PM to 5:45 PM	1	494	48	0	66	6	73	0	87	870	15	0	198	8	107	0
5:45 PM to 6:00 PM	3	475	31	0	71	4	92	0	90	817	18	0	146	9	68	0
6:00 PM to 6:15 PM	3	484	31	0	83	7	95	0	56	758	6	0	163	14	65	0
6:15 PM to 6:30 PM	1	463	35	0	68	5	92	0	101	851	6	0	103	11	35	0
6:30 PM to 6:45 PM	0	571	33	0	64	5	79	0	94	729	8	0	89	17	29	0
6:45 PM to 7:00 PM	0	478	38	0	61	5	81	0	83	706	7	0	84	7	18	0
PEAK HOURS																
Direction:	Southbound				Westbound				Northbound				Eastbound			
Roadway:	Rte 28				Severn Way				Rte 28				Severn Way			
Movement:	Right	Thru	Left	Peds	Right	Thru	Left	Peds	Right	Thru	Left	Peds	Right	Thru	Left	Peds
AM INTERSECTION PEAK HOUR																
8:00 AM to 9:00 AM	172	3026	120	1	62	53	149	0	198	1979	427	0	53	5	7	0
PM INTERSECTION PEAK HOUR																
5:00 PM to 6:00 PM	10	2027	156	0	272	22	304	0	324	3623	51	0	673	40	299	0
AM SYSTEM PEAK HOUR																
7:45 AM to 8:45 AM	127	3226	149	1	59	58	125	0	217	1752	353	0	51	7	6	0
PM SYSTEM PEAK HOUR																
5:00 PM to 6:00 PM	10	2027	156	0	272	22	304	0	324	3623	51	0	673	40	299	0
PEAK HOUR FACTORS	Southbound Rte 28				Westbound Severn Way				Northbound Rte 28				Eastbound Severn Way			
	Right	Thru	Left	Peds	Right	Thru	Left	Peds	Right	Thru	Left	Peds	Right	Thru	Left	Peds
AM PEAK HOUR	0.58	0.88	0.55	N/A	0.78	0.91	0.53	N/A	0.76	0.82	0.73	N/A	0.91	0.44	0.50	N/A
PM PEAK HOUR	0.83	0.92	0.71	N/A	0.96	0.92	0.83	N/A	0.90	0.91	0.71	N/A	0.85	0.83	0.70	N/A

Overall AM PEAK HOUR FACTOR = 0.98

Overall PM PEAK HOUR FACTOR = 0.94

AM Period Intersection Volume: 15361

PM Period Intersection Volume: 20790

Date of Counts: Wednesday, April 11, 2007

AM Weather Conditions:

PM Weather Conditions:

AM INTERSECTION PEAK VOLUMES

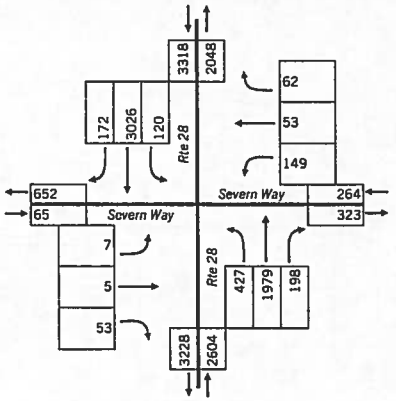

AM SYSTEM PEAK VOLUMES

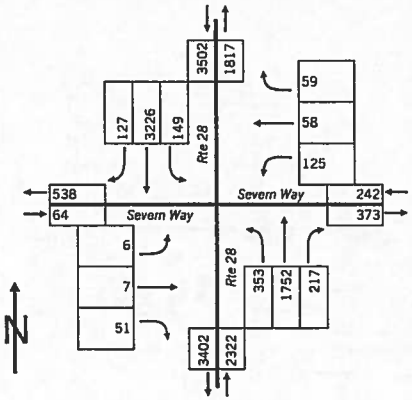

PM INTERSECTION PEAK VOLUMES

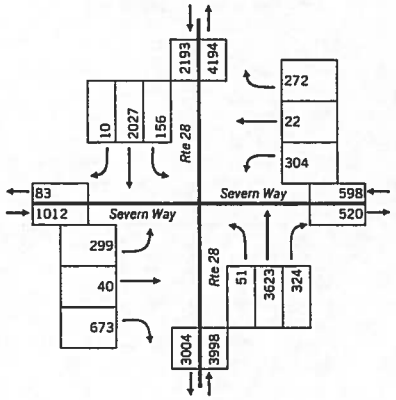

PM SYSTEM PEAK VOLUMES

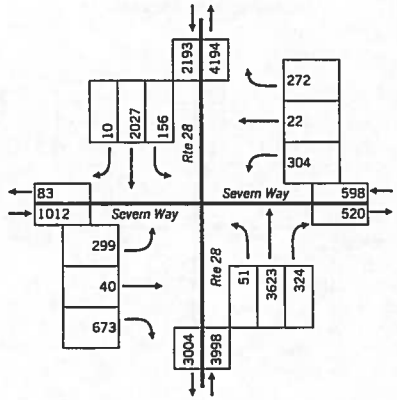

Gorove/Slade Associates

Project Name :	Kincora
Project Number:	2041-001
Location:	Loudoun County
Data Source	Gorove/Slade Associates

Intersection: Pacific Blvd and Waxpool road

AM PEAK

	Direction:	Southbound				Westbound				Northbound				Eastbound			
	Roadway:	Pacific Blvd				Waxpool Rd.				Pacific Blvd				Waxpool Rd.			
	Movement:	Right	Thru	Left	Peds	Right	Thru	Left	Peds	Right	Thru	Left	Peds	Right	Thru	Left	Peds
6:00 AM to 6:15 AM		7	3	6	0	15	103	23	0	7	2	1	0	1	325	4	0
6:15 AM to 6:30 AM		6	4	7	0	31	242	7	0	7	0	1	0	3	501	9	0
6:30 AM to 6:45 AM		6	1	10	0	58	351	25	0	10	2	0	0	5	617	12	0
6:45 AM to 7:00 AM		11	6	16	0	79	352	31	0	9	2	1	0	3	689	24	0
7:00 AM to 7:15 AM		16	5	19	0	52	295	24	0	21	0	1	0	0	771	9	1
7:15 AM to 7:30 AM		9	6	29	0	36	381	34	0	6	2	2	0	9	836	27	1
7:30 AM to 7:45 AM		15	10	33	0	62	347	51	0	7	0	0	0	13	733	33	2
7:45 AM to 8:00 AM		15	16	19	0	71	399	66	0	11	4	1	0	15	917	37	0
8:00 AM to 8:15 AM		14	14	27	0	45	427	63	0	13	1	3	0	28	832	28	0
8:15 AM to 8:30 AM		11	13	20	0	50	389	121	0	14	2	2	0	29	776	68	0
8:30 AM to 8:45 AM		19	15	59	0	51	537	103	0	13	0	0	0	55	701	16	1
8:45 AM to 9:00 AM		18	11	43	0	52	626	140	0	13	2	2	0	60	717	8	0

PM PEAK

	Direction:	Southbound				Westbound				Northbound				Eastbound			
	Roadway:	Pacific Blvd				Waxpool Rd.				Pacific Blvd				Waxpool Rd.			
	Movement:	Right	Thru	Left	Peds	Right	Thru	Left	Peds	Right	Thru	Left	Peds	Right	Thru	Left	Peds
4:00 PM to 4:15 PM		48	1	48	0	86	692	11	0	52	3	11	0	0	516	22	0
4:15 PM to 4:30 PM		47	8	70	0	78	678	8	0	45	5	19	0	0	449	46	0
4:30 PM to 4:45 PM		49	7	51	0	81	785	7	0	71	5	20	0	1	524	45	0
4:45 PM to 5:00 PM		54	10	60	0	96	774	6	0	65	6	24	0	0	452	31	0
5:00 PM to 5:15 PM		69	6	68	0	74	995	8	0	170	12	64	0	3	548	55	0
5:15 PM to 5:30 PM		66	6	71	0	73	941	10	0	159	11	60	0	3	510	22	0
5:30 PM to 5:45 PM		66	6	73	0	87	870	15	0	198	8	107	0	1	494	48	0
5:45 PM to 6:00 PM		71	4	92	0	90	817	18	0	146	9	68	0	3	475	31	0
6:00 PM to 6:15 PM		83	7	95	0	56	758	6	0	163	14	65	0	3	484	31	0
6:15 PM to 6:30 PM		68	5	92	0	101	851	6	0	103	11	35	0	1	463	35	0
6:30 PM to 6:45 PM		64	5	79	0	94	729	8	0	89	17	29	0	0	571	33	0
6:45 PM to 7:00 PM		61	5	81	0	83	706	7	0	84	7	18	0	0	478	38	0

PEAK HOURS

	Direction:	Southbound				Westbound				Northbound				Eastbound			
	Roadway:	Pacific Blvd				Waxpool Rd.				Pacific Blvd				Waxpool Rd.			
	Movement:	Right	Thru	Left	Ped	Right	Thru	Left	Peds	Right	Thru	Left	Peds	Right	Thru	Left	Peds
AM INTERSECTION PEAK HOUR																	
8:00 AM to 9:00 AM		62	53	149	0	198	1979	427	0	53	5	7	0	172	3026	120	1
PM INTERSECTION PEAK HOUR																	
5:00 PM to 6:00 PM		272	22	304	0	324	3623	51	0	673	40	299	0	10	2027	156	0
AM SYSTEM PEAK HOUR																	
7:45 AM to 8:45 AM		59	58	125	0	217	1752	353	0	51	7	6	0	127	3226	149	1
PM SYSTEM PEAK HOUR																	
5:00 PM to 6:00 PM		272	22	304	0	324	3623	51	0	673	40	299	0	10	2027	156	0

PEAK HOUR FACTORS

	Southbound Pacific Blvd				Westbound Waxpool Rd.				Northbound Pacific Blvd				Eastbound Waxpool Rd.			
	Right	Thru	Left	Peds	Right	Thru	Left	Peds	Right	Thru	Left	Peds	Right	Thru	Left	Peds
AM PEAK HOUR	0.78	0.9	0.53	N/A	0.76	0.82	0.73	N/A	0.91	0.44	0.50	N/A	0.58	0.88	0.55	N/A
PM PEAK HOUR	0.96	0.9	0.83	N/A	0.90	0.91	0.71	N/A	0.85	0.83	0.70	N/A	0.83	0.92	0.71	N/A

Overall AM PEAK HOUR FACTOR = 0.98

Overall PM PEAK HOUR FACTOR = 0.94

AM Period Intersection Volume: 15361

PM Period Intersection Volume: 20790

Date of Counts: Wednesday, April 11, 2007

AM Weather Conditions:

PM Weather Conditions:

AM INTERSECTION PEAK VOLUMES

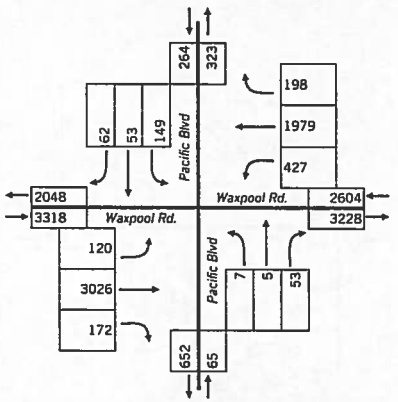

AM SYSTEM PEAK VOLUMES

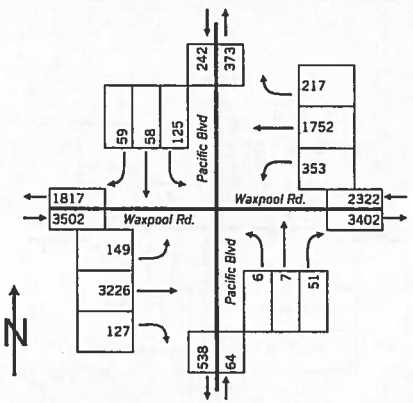

PM INTERSECTION PEAK VOLUMES

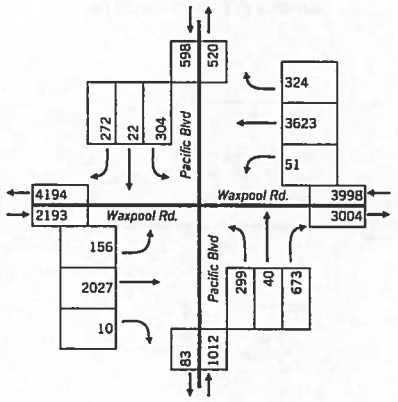

PM SYSTEM PEAK VOLUMES

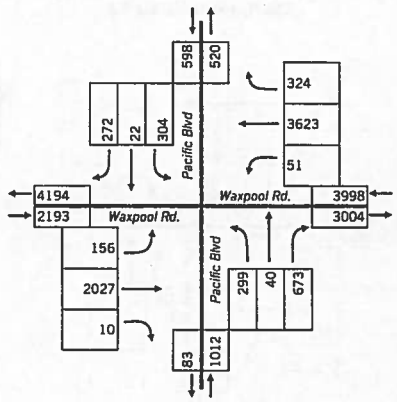

Gorove/Slade Associates

Project Name :	Kincora
Project Number:	2041-001
Location:	Loudoun County
Data Source:	Gorove/Slade Associates

Intersection: Smith Switch Road and Waxpool

Date of Counts: Thursday, May 22, 2008

AM Weather Conditions:

PM Weather Conditions:

AM PEAK

	Direction:	Southbound				Westbound				Northbound				Eastbound			
	Roadway:	Smith Switch Road				Waxpool				Smith Switch Rd				Waxpool			
	Movement:	Right	Thru	Left	Peds	Right	Thru	Left	Peds	Right	Thru	Left	Peds	Right	Thru	Left	Peds
6:00 AM to 6:15 AM		2	0	2	0	33	60	14	0	53	1	1	0	5	274	7	0
6:15 AM to 6:30 AM		1	1	6	0	53	56	14	0	77	1	1	0	6	342	13	0
6:30 AM to 6:45 AM		9	1	17	0	46	115	29	0	97	5	2	0	1	498	12	0
6:45 AM to 7:00 AM		1	3	25	0	27	118	40	0	97	3	1	0	6	539	15	0
7:00 AM to 7:15 AM		6	1	20	0	17	118	47	0	83	2	10	0	4	542	5	0
7:15 AM to 7:30 AM		2	0	18	0	21	115	50	0	101	3	3	0	2	408	8	0
7:30 AM to 7:45 AM		1	3	13	0	34	126	39	0	72	5	0	0	5	505	6	0
7:45 AM to 8:00 AM		5	3	25	0	30	143	75	0	88	16	3	0	4	450	15	0
8:00 AM to 8:15 AM		4	3	11	0	14	122	21	0	81	14	9	0	4	425	13	0
8:15 AM to 8:30 AM		1	0	14	0	24	171	62	0	105	19	0	0	7	426	5	0
8:30 AM to 8:45 AM		6	7	8	0	14	151	66	0	78	4	3	0	14	489	1	0
8:45 AM to 9:00 AM						21	151	60	0	89	8	1	0				

PM PEAK

	Direction:	Southbound				Westbound				Northbound				Eastbound			
	Roadway:	Smith Switch Road				Waxpool				Smith Switch Rd				Waxpool			
	Movement:	Right	Thru	Left	Peds	Right	Thru	Left	Peds	Right	Thru	Left	Peds	Right	Thru	Left	Peds
4:00 PM to 4:15 PM		20	2	54	0	82	358	85	9	56	8	14	0	5	295	7	0
4:15 PM to 4:30 PM		10	2	45	0	26	504	81	0	55	4	18	0	5	274	4	0
4:30 PM to 4:45 PM		17	14	64	0	21	529	87	0	88	4	28	1	2	293	18	0
4:45 PM to 5:00 PM		14	4	37	0	21	562	97	0	81	11	13	0	10	289	10	0
5:00 PM to 5:15 PM		20	18	51	0	29	592	84	0	104	5	35	0	3	249	10	0
5:15 PM to 5:30 PM		15	7	50	0	24	576	102	0	115	14	17	0	11	276	0	0
5:30 PM to 5:45 PM		9	9	19	0	40	498	83	1	89	6	35	0	2	306	2	0
5:45 PM to 6:00 PM		6	21	42	0	49	514	83	0	89	7	28	0	8	292	2	0
6:00 PM to 6:15 PM		16	7	36	0	36	486	66	0	107	6	29	0	0	283	6	0
6:15 PM to 6:30 PM		17	14	29	0	52	498	74	0	80	8	36	1	9	291	0	0
6:30 PM to 6:45 PM		11	16	53	0	35	470	64	0	76	5	19	0	3	296	1	0
6:45 PM to 7:00 PM		13	2	35	0	11	464	72	0	74	17	20	0	6	282	6	0

PEAK HOURS

	Direction:	Southbound				Westbound				Northbound				Eastbound			
	Roadway:	Smith Switch Road				Waxpool				Smith Switch Rd				Waxpool			
	Movement:	Right	Thru	Left	Peds	Right	Thru	Left	Peds	Right	Thru	Left	Peds	Right	Thru	Left	Peds
AM INTERSECTION PEAK HOUR																	
6:30 AM to 7:30 AM		18	5	80	0	111	466	166	0	378	13	16	0	13	1987	40	0
PM INTERSECTION PEAK HOUR																	
4:30 PM to 5:30 PM		66	43	202	0	95	2259	370	0	388	34	93	1	26	1107	38	0
AM SYSTEM PEAK HOUR																	
7:45 AM to 8:45 AM		16	13	88	0	82	587	224	0	352	53	15	0	29	1790	34	0
PM SYSTEM PEAK HOUR																	
5:00 PM to 6:00 PM		50	55	162	0	142	2180	352	1	397	32	115	0	24	1123	14	0

PEAK HOUR FACTORS

	Southbound				Westbound				Northbound				Eastbound			
	Smith Switch Road				Waxpool				Smith Switch Rd				Waxpool			
	Right	Thru	Left	Peds	Right	Thru	Left	Peds	Right	Thru	Left	Peds	Right	Thru	Left	Peds
AM PEAK HOUR	0.67	0.46	0.50	N/A	0.68	0.86	0.75	N/A	0.84	0.70	0.42	N/A	0.52	0.92	0.57	N/A
PM PEAK HOUR	0.63	0.65	0.79	N/A	0.72	0.92	0.86	N/A	0.86	0.57	0.82	N/A	0.55	0.92	0.35	N/A

Overall AM PEAK HOUR FACTOR = 0.95

Overall PM PEAK HOUR FACTOR = 0.96

AM Period Intersection Volume: 8738

PM Period Intersection Volume: 13211

AM INTERSECTION PEAK VOLUMES

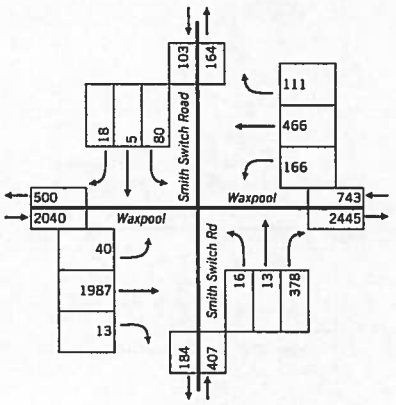

AM SYSTEM PEAK VOLUMES

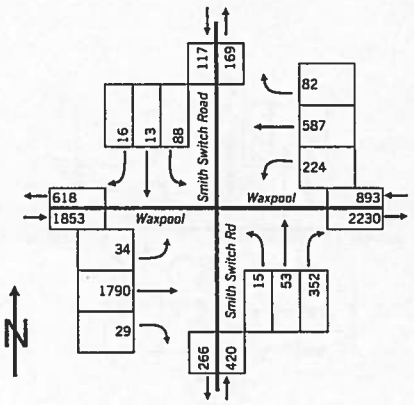

PM INTERSECTION PEAK VOLUMES

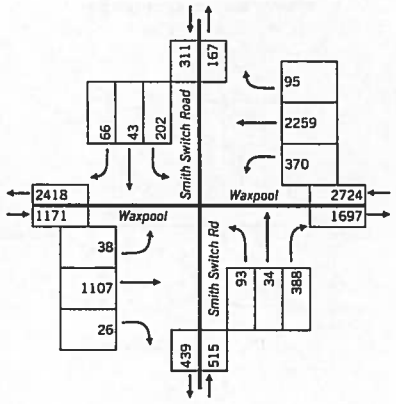

PM SYSTEM PEAK VOLUMES

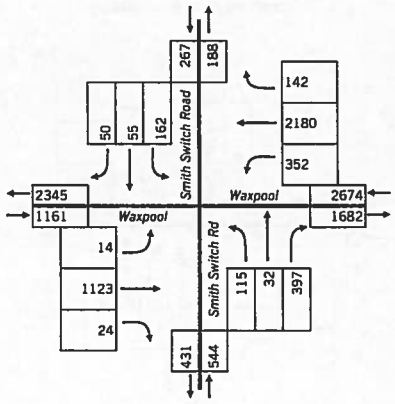

Gorove/Slade Associates

Project Name	Kincora
Project Number	2041-001
Project Location	Loudoun County
Data Source	Gorove/Slade Associates

Intersection: Route 28 and Steeplechase

AM PEAK

	Direction:	Southbound				Westbound				Northbound				Eastbound			
	Roadway:	Rte 28				Steeplechase				Rte 28				Steeplechase			
	Movement:	Right	Thru	Left	Peds	Right	Thru	Left	Peds	Right	Thru	Left	Peds	Right	Thru	Left	Peds
6:00 AM	to 6:15 AM	0	422	10	0	1	0	6		31	222	2	0	0	0	0	0
6:15 AM	to 6:30 AM	0	488	14	0	1	1	13		30	260	1	0	0	0	0	0
6:30 AM	to 6:45 AM	2	641	12	0	3	0	15		28	310	3	0	1	0	0	0
6:45 AM	to 7:00 AM	2	714	24	0	1	0	10		50	311	0	0	0	0	0	0
7:00 AM	to 7:15 AM	0	609	28	0	1	0	21		49	317	1	0	1	0	1	0
7:15 AM	to 7:30 AM	1	730	15	0	5	0	28		65	362	1	0	0	1	0	0
7:30 AM	to 7:45 AM	0	847	17	0	1	0	19		73	397	1	0	1	0	0	0
7:45 AM	to 8:00 AM	0	1022	42	0	3	0	26		98	439	1	0	0	0	0	0
8:00 AM	to 8:15 AM	0	906	35	0	7	0	23		91	378	0	0	0	0	1	0
8:15 AM	to 8:30 AM	1	896	29	0	4	0	21		58	405	0	0	2	0	0	0
8:30 AM	to 8:45 AM	2	793	44	0	2	6	18		71	428	2	0	0	0	0	0
8:45 AM	to 9:00 AM	0	698	21	0	7	0	11		84	466	2	1	0	0	0	0

PM PEAK

	Direction:	Southbound				Westbound				Northbound				Eastbound			
	Roadway:	Rte 28				Steeplechase				Rte 28				Steeplechase			
	Movement:	Right	Thru	Left	Peds	Right	Thru	Left	Peds	Right	Thru	Left	Peds	Right	Thru	Left	Peds
4:00 PM	to 4:15 PM	0	658	10	0			57						0	0	0	0
4:15 PM	to 4:30 PM	0	533	5	0			53						0	1	0	0
4:30 PM	to 4:45 PM	0	608	1	0	21		62		26	700	3	0	0	0	0	0
4:45 PM	to 5:00 PM	0	541	4	0	11		69		22	705	2	0	0	1	0	0
5:00 PM	to 5:15 PM	0	564	4	0	15		97		29	769	2	0	2	0	0	0
5:15 PM	to 5:30 PM	1	499	3	0	18		65		26	834	5	0	0	0	0	0
5:30 PM	to 5:45 PM	1	498	4	0	23		71		35	774	5	0	2	0	2	0
5:45 PM	to 6:00 PM	0	521	1	0	31		80		35	791	2	0	0	1	1	0
6:00 PM	to 6:15 PM	0	515	7	0	17		56		26	702	1	0	2	1	3	0
6:15 PM	to 6:30 PM	1	539	3	0	11		42		19	677	4	0	1	1	1	0
6:30 PM	to 6:45 PM	1	518	3	0	13		63		28	603	2	0	1	1	0	0
6:45 PM	to 7:00 PM					12				21	603	5	0				

PEAK HOURS

	Direction:	Southbound				Westbound				Northbound				Eastbound			
	Roadway:	Rte 28				Steeplechase				Rte 28				Steeplechase			
	Movement:	Right	Thru	Left	Peds	Right	Thru	Left	Peds	Right	Thru	Left	Peds	Right	Thru	Left	Peds
AM INTERSECTION PEAK HOUR																	
7:45 AM	to 8:45 AM	3	3617	150	0	21	0	88	0	314	1730	3	0	2	0	1	0
PM INTERSECTION PEAK HOUR																	
5:00 PM	to 6:00 PM	2	2082	12	0	87	0	313	0	125	3168	14	0	4	1	3	0
AM SYSTEM PEAK HOUR																	
7:45 AM	to 8:45 AM	3	3617	150	0	21	0	88	0	314	1730	3	0	2	0	1	0
PM SYSTEM PEAK HOUR																	
5:00 PM	to 6:00 PM	2	2082	12	0	87	0	313	0	125	3168	14	0	4	1	3	0

PEAK HOUR FACTORS

	Southbound Rte 28				Westbound Steeplechase				Northbound Rte 28				Eastbound Steeplechase			
	Right	Thru	Left	Peds	Right	Thru	Left	Peds	Right	Thru	Left	Peds	Right	Thru	Left	Peds
AM PEAK HOUR	0.38	0.88	0.85	N/A	0.75	0.00	0.85	N/A	0.80	0.89	0.38	N/A	0.25	0.00	0.25	N/A
PM PEAK HOUR	0.50	0.92	0.75	N/A	0.70	0.00	0.81	N/A	0.89	0.95	0.70	N/A	0.50	0.25	0.38	N/A

Overall AM PEAK HOUR FACTOR = 0.91

Overall PM PEAK HOUR FACTOR = 0.98

AM Period Intersection Volume: 14363

PM Period Intersection Volume: 14407

Date of Counts: Wednesday, June 04, 2008

AM Weather Conditions:

PM Weather Conditions:

AM INTERSECTION PEAK VOLUMES

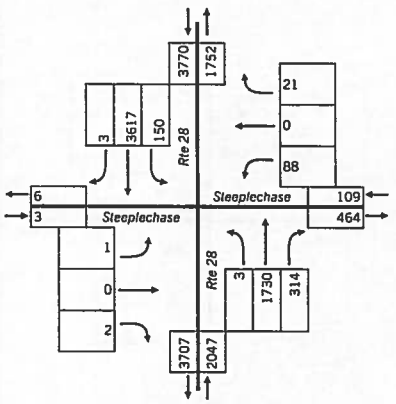

AM SYSTEM PEAK VOLUMES

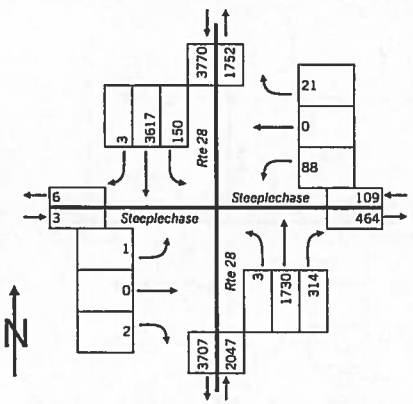

PM INTERSECTION PEAK VOLUMES

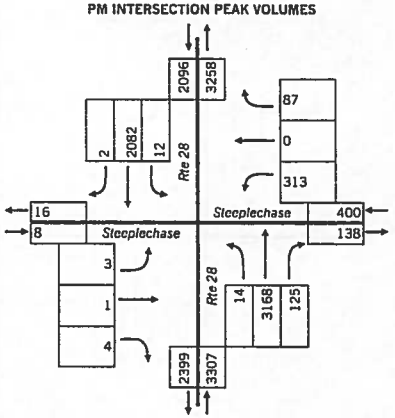

PM SYSTEM PEAK VOLUMES

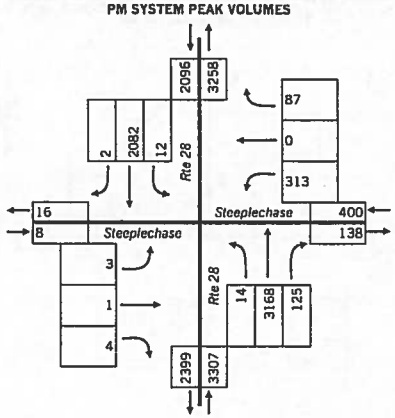

Gorove/Slade Associates

Project Name	Kincora
Project Number	2041-001
Project Location	Loudoun County
Data Source	Gorove/Slade Associates

Intersection: Ashburn Village Blvd and Gloucester Pkwy

AM PEAK

	Direction:	Southbound				Westbound				Northbound				Eastbound			
	Roadway:	AVB				Gloucester pky				AVB				Gloucester pky			
	Movement:	Right	Thru	Left	Peds	Right	Thru	Left	Peds	Right	Thru	Left	Peds	Right	Thru	Left	Peds
6:00 AM to 6:15 AM		1	52	8	0	10	1	28	0	7	25	7	0	28	5	0	0
6:15 AM to 6:30 AM		7	67	3	2	13	7	21	0	3	28	7	0	31	4	4	0
6:30 AM to 6:45 AM		2	73	12	0	19	10	28	1	12	27	6	0	57	5	2	0
6:45 AM to 7:00 AM		4	79	10	0	19	3	10	0	18	34	10	0	66	18	4	1
7:00 AM to 7:15 AM		5	82	25	0	15	15	31	0	21	42	18	0	67	32	3	0
7:15 AM to 7:30 AM		4	71	22	0	31	20	31	0	18	52	19	0	61	54	5	0
7:30 AM to 7:45 AM		6	80	48	0	41	22	46	0	43	69	30	1	68	100	14	0
7:45 AM to 8:00 AM		1	75	65	0	22	34	22	0	50	89	35	0	65	114	17	0
8:00 AM to 8:15 AM		2	72	54	1	35	36	54	0	84	82	32	0	47	115	12	1
8:15 AM to 8:30 AM		6	93	43	1	45	43	81	3	56	87	25	0	51	78	11	0
8:30 AM to 8:45 AM		10	96	28	0	35	23	54	0	36	86	32	0	46	43	9	0
8:45 AM to 9:00 AM		6	73	21	1	21	23	34	1	37	75	32	1	64	39	6	0

PM PEAK

	Direction:	Southbound				Westbound				Northbound				Eastbound			
	Roadway:	AVB				Gloucester pky				AVB				Gloucester pky			
	Movement:	Right	Thru	Left	Peds	Right	Thru	Left	Peds	Right	Thru	Left	Peds	Right	Thru	Left	Peds
4:00 PM to 4:15 PM		16	80	44	0	34	26	27	1	56	140	65	0	38	21	18	0
4:15 PM to 4:30 PM		17	104	21	6	27	16	34	0	35	145	55	0	49	23	10	4
4:30 PM to 4:45 PM		21	105	30	1	40	43	28	1	23	172	76	2	57	14	8	0
4:45 PM to 5:00 PM		13	134	40	0	24	42	33	4	32	162	80	0	53	27	17	1
5:00 PM to 5:15 PM		18	124	31	0	36	45	24	0	34	178	84	0	60	29	13	0
5:15 PM to 5:30 PM		24	120	32	9	50	53	24	4	36	175	73	1	64	31	14	0
5:30 PM to 5:45 PM		22	176	40	2	44	43	28	0	31	176	84	0	60	24	18	0
5:45 PM to 6:00 PM		24	120	36	0	53	55	36	0	41	180	91	0	55	23	16	0
6:00 PM to 6:15 PM		26	128	45	0	50	47	38	0	33	170	68	0	54	23	14	1
6:15 PM to 6:30 PM		19	129	47	3	43	45	32	5	41	164	84	0	58	48	13	2
6:30 PM to 6:45 PM		20	98	38	5	36	33	20	3	51	173	79	1	37	40	17	1
6:45 PM to 7:00 PM		26	108	32	4	25	35	26	0	46	157	81	0	41	31	9	0

PEAK HOURS

	Direction:	Southbound				Westbound				Northbound				Eastbound			
	Roadway:	AVB				Gloucester pky				AVB				Gloucester pky			
	Movement:	Right	Thru	Left	Peds	Right	Thru	Left	Peds	Right	Thru	Left	Peds	Right	Thru	Left	Peds
AM INTERSECTION PEAK HOUR																	
7:30 AM to 8:30 AM		15	320	210	2	143	135	203	3	233	327	122	1	231	407	54	1
PM INTERSECTION PEAK HOUR																	
5:30 PM to 6:30 PM		91	553	168	5	190	190	134	5	146	690	327	0	227	118	61	3
AM SYSTEM PEAK HOUR																	
7:45 AM to 8:45 AM		19	336	190	2	137	136	211	3	226	344	124	0	209	350	49	1
PM SYSTEM PEAK HOUR																	
5:00 PM to 6:00 PM		83	540	139	11	183	196	112	4	142	709	332	1	239	107	61	0

PEAK HOUR FACTORS

	Southbound AVB				Westbound Gloucester pky				Northbound AVB				Eastbound Gloucester pky			
	Right	Thru	Left	Peds	Right	Thru	Left	Peds	Right	Thru	Left	Peds	Right	Thru	Left	Peds
AM PEAK HOUR	0.48	0.88	0.73	N/A	0.76	0.79	0.65	N/A	0.67	0.97	0.89	N/A	0.80	0.76	0.72	N/A
PM PEAK HOUR	0.92	0.77	0.87	N/A	0.86	0.89	0.78	N/A	0.87	0.98	0.91	N/A	0.93	0.86	0.85	N/A

Overall AM PEAK HOUR FACTOR = 0.93

Overall PM PEAK HOUR FACTOR = 0.95

AM Period Intersection Volume: 4968

PM Period Intersection Volume: 7901

Date of Counts: Tuesday, June 03, 2008

AM Weather Conditions:

PM Weather Conditions:

AM INTERSECTION PEAK VOLUMES

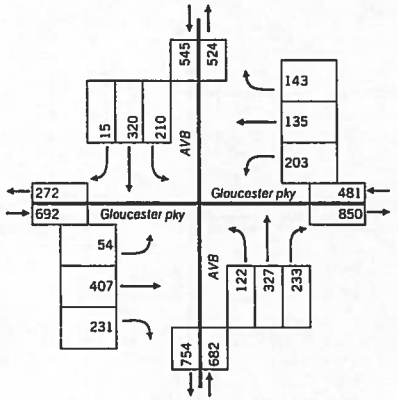

AM SYSTEM PEAK VOLUMES

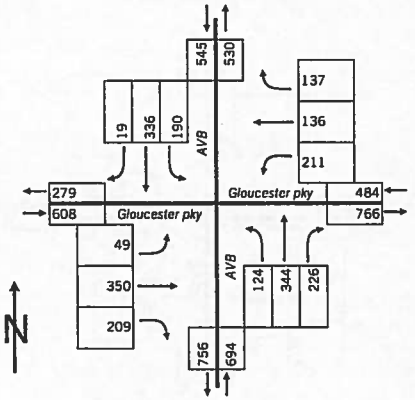

PM INTERSECTION PEAK VOLUMES

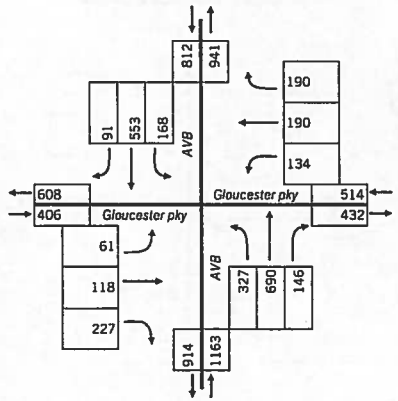

PM SYSTEM PEAK VOLUMES

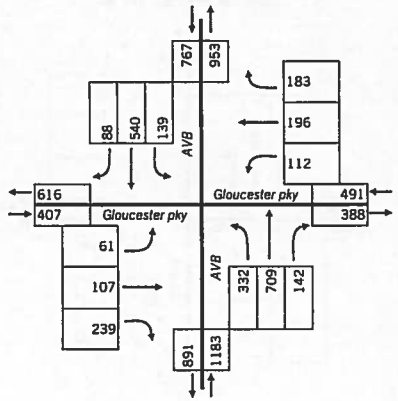

Gorove/Slade Associates

Project Name	Kincora
Project Number	2041-001
Project Location	Loudoun County
Data Source	Gorove/Slade Associates

Intersection: AVB and Route 7

AM PEAK

	Direction:	Southbound				Westbound				Northbound				Eastbound			
	Roadway:	AVB				RTE7				AVB				RTE7			
	Movement:	Right	Thru	Left	Peds	Right	Thru	Left	Peds	Right	Thru	Left	Peds	Right	Thru	Left	Peds
6:00 AM to 6:15 AM		0	6	17	1	35	180	13	1	27	3	8	0	18	777	4	0
6:15 AM to 6:30 AM		3	5	38	0	31	224	10	0	30	1	11	0	22	939	5	0
6:30 AM to 6:45 AM		3	3	50	0	39	295	12	0	52	12	21	0	31	959	1	0
6:45 AM to 7:00 AM		1	11	88	0	46	282	27	0	50	6	24	0	23	879	7	0
7:00 AM to 7:15 AM		3	15	123	0	48	352	30	0	47	2	12	0	19	905	1	0
7:15 AM to 7:30 AM		1	26	148	0	61	410	40	0	50	6	24	0	34	801	0	0
7:30 AM to 7:45 AM		1	37	133	0	53	393	24	0	71	17	45	0	18	654	3	0
7:45 AM to 8:00 AM		0	58	200	0	94	404	57	0	60	24	26	0	19	615	3	0
8:00 AM to 8:15 AM		0	59	141	0	69	414	26	0	63	17	40	0	28	603	5	0
8:15 AM to 8:30 AM		2	41	147	0	83	420	51	0	76	13	42	0	36	660	3	0
8:30 AM to 8:45 AM		1	53	172	0	57	322	47	0	63	13	28	0	33	626	4	0
8:45 AM to 9:00 AM		0	24	91	0	95	383	58	0	35	13	42	0	34	771	2	0

PM PEAK

	Direction:	Southbound				Westbound				Northbound				Eastbound			
	Roadway:	AVB				RTE7				AVB				RTE7			
	Movement:	Right	Thru	Left	Peds	Right	Thru	Left	Peds	Right	Thru	Left	Peds	Right	Thru	Left	Peds
4:00 PM to 4:15 PM		6	17	61	0	50	782	90	0	61	13	56	0	43	499	1	0
4:15 PM to 4:30 PM		4	18	58	0	70	854	98	5	67	11	57	0	38	515	1	0
4:30 PM to 4:45 PM		1	15	62	0	71	829	113	0	67	16	54	0	52	486	3	0
4:45 PM to 5:00 PM		2	23	65	0	75	859	96	6	82	16	52	0	58	477	1	0
5:00 PM to 5:15 PM		2	30	74	0	76	871	106	0	80	19	89	0	53	522	2	0
5:15 PM to 5:30 PM		0	38	87	0	85	851	126	0	78	18	77	0	63	587	1	0
5:30 PM to 5:45 PM		4	38	89	0	76	843	110	1	61	16	90	0	60	537	1	0
5:45 PM to 6:00 PM		4	18	67	0	73	829	138	1	59	17	71	0	46	515	0	0
6:00 PM to 6:15 PM		1	18	59	0	73	862	136	0	82	7	65	0	66	457	1	0
6:15 PM to 6:30 PM		1	14	40	0	75	860	108	0	61	15	71	0	57	502	0	0
6:30 PM to 6:45 PM		4	21	33	0	78	854	118	0	66	18	69	0	43	397	0	0
6:45 PM to 7:00 PM		0	12	25	0	78	862	98	0	56	10	58	0	43	378	0	0

PEAK HOURS

	Direction:	Southbound				Westbound				Northbound				Eastbound			
	Roadway:	AVB				RTE7				AVB				RTE7			
	Movement:	Right	Thru	Left	Peds	Right	Thru	Left	Peds	Right	Thru	Left	Peds	Right	Thru	Left	Peds
AM INTERSECTION PEAK HOUR																	
7:00 AM to 8:00 AM		5	136	604	0	356	1559	151	0	228	49	107	0	90	2975	7	0
PM INTERSECTION PEAK HOUR																	
5:00 PM to 6:00 PM		10	124	317	0	310	3394	480	2	278	70	327	0	222	2161	4	0
AM SYSTEM PEAK HOUR																	
7:45 AM to 8:45 AM		3	211	660	0	303	1560	181	0	262	67	136	0	116	2504	15	0
PM SYSTEM PEAK HOUR																	
5:00 PM to 6:00 PM		10	124	317	0	310	3394	480	2	278	70	327	0	222	2161	4	0

PEAK HOUR FACTORS	Southbound				Westbound				Northbound				Eastbound			
	AVB				RTE7				AVB				RTE7			
	Right	Thru	Left	Peds	Right	Thru	Left	Peds	Right	Thru	Left	Peds	Right	Thru	Left	Peds
AM PEAK HOUR	0.38	0.89	0.83	N/A	0.81	0.93	0.79	N/A	0.86	0.70	0.81	N/A	0.81	0.95	0.75	N/A
PM PEAK HOUR	0.63	0.82	0.89	N/A	0.91	0.97	0.87	N/A	0.87	0.92	0.91	N/A	0.88	0.92	0.50	N/A

Overall AM PEAK HOUR FACTOR = 0.96

Overall PM PEAK HOUR FACTOR = 0.96

AM Period Intersection Volume: 17502

PM Period Intersection Volume: 21694

Date of Counts: Tuesday, June 03, 2008

AM Weather Conditions:

PM Weather Conditions:

AM INTERSECTION PEAK VOLUMES

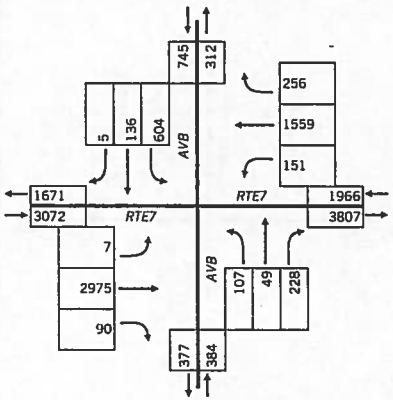

AM SYSTEM PEAK VOLUMES

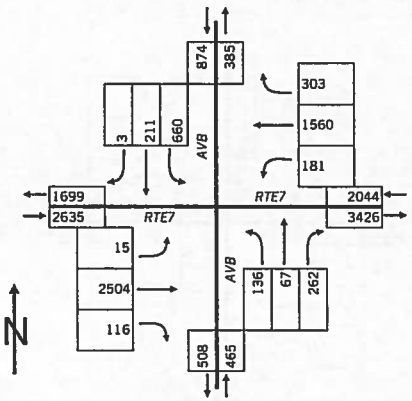

PM INTERSECTION PEAK VOLUMES

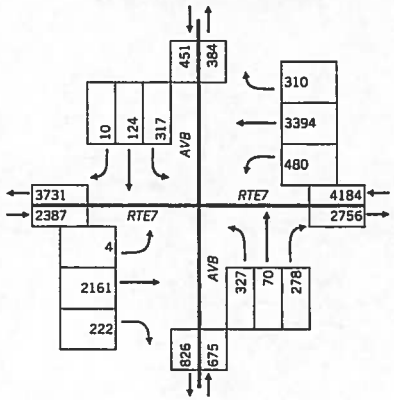

PM SYSTEM PEAK VOLUMES

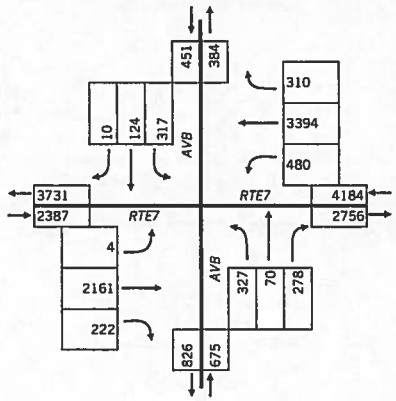

Gorove/Slade Associates

Project Name	Kincora
Project Number	2041-001
Project Location	Loudoun County
Data Source	Gorove/Slade Associates

Intersection: Cascades Parkway and Church Road

AM PEAK

	Direction:	Southbound				Westbound				Northbound				Eastbound			
	Roadway:	Cascades Pky				Church Rd				Cascades Pky				Church Rd			
	Movement:	Right	Thru	Left	Peds	Right	Thru	Left	Peds	Right	Thru	Left	Peds	Right	Thru	Left	Peds
6:00 AM	to 6:15 AM	46	0	13	0	41	61	0	1					0	27	42	0
6:15 AM	to 6:30 AM	70	0	23	0	42	48	0	0					0	43	68	2
6:30 AM	to 6:45 AM	65	0	19	0	32	62	0	0					0	61	66	4
6:45 AM	to 7:00 AM	98	0	29	0	66	91	0	0					0	47	106	1
7:00 AM	to 7:15 AM	102	0	45	0	48	61	0	0					0	82	110	0
7:15 AM	to 7:30 AM	105	0	51	0	47	51	0	0					0	107	114	0
7:30 AM	to 7:45 AM	114	0	73	0	62	84	0	0					0	100	108	0
7:45 AM	to 8:00 AM	154	0	63	0	80	96	1	0					0	91	141	0
8:00 AM	to 8:15 AM	104	0	69	0	80	88	0	0					0	98	140	0
8:15 AM	to 8:30 AM	122	0	62	0	89	88	0	0					0	107	133	0
8:30 AM	to 8:45 AM	142	0	84	0	102	92	0	0					0	102	150	0
8:45 AM	to 9:00 AM	122	2	84	0	68	123	0	0					0	133	156	0

PM PEAK

	Direction:	Southbound				Westbound				Northbound				Eastbound			
	Roadway:	Cascades Pky				Church Rd				Cascades Pky				Church Rd			
	Movement:	Right	Thru	Left	Peds	Right	Thru	Left	Peds	Right	Thru	Left	Peds	Right	Thru	Left	Peds
4:00 PM	to 4:15 PM	99	0	132	0	118	86	0	0					0	110	180	2
4:15 PM	to 4:30 PM	134	0	115	0	123	102	0	0					0	96	192	1
4:30 PM	to 4:45 PM	131	0	113	0	154	75	0	1					0	110	175	0
4:45 PM	to 5:00 PM	123	0	103	0	105	123	0	1					0	97	181	0
5:00 PM	to 5:15 PM	160	0	170	0	174	108	0	0					0	120	212	0
5:15 PM	to 5:30 PM	196	0	144	0	185	141	0	0					0	135	244	0
5:30 PM	to 5:45 PM	151	0	143	0	178	112	0	0					0	114	266	0
5:45 PM	to 6:00 PM	190	0	148	0	192	128	0	0					0	104	221	0
6:00 PM	to 6:15 PM	123	0	161	0	213	136	0	0					0	136	270	0
6:15 PM	to 6:30 PM	108	0	124	0	160	129	3	0					0	106	236	0
6:30 PM	to 6:45 PM	160	0	133	0	157	96	0	0					0	95	199	0
6:45 PM	to 7:00 PM	152	0	124	0	157	142	1	0					0	85	192	0

PEAK HOURS

	Direction:	Southbound				Westbound				Northbound				Eastbound			
	Roadway:	Cascades Pky				Church Rd				Cascades Pky				Church Rd			
	Movement:	Right	Thru	Left	Peds	Right	Thru	Left	Peds	Right	Thru	Left	Peds	Right	Thru	Left	Peds
AM INTERSECTION PEAK HOUR																	
8:00 AM	to 9:00 AM	490	2	299	0	339	391	0	0	0	0	0	0	0	440	579	0
PM INTERSECTION PEAK HOUR																	
5:15 PM	to 6:15 PM	660	0	596	0	768	517	0	0	0	0	0	0	0	489	1001	0
AM SYSTEM PEAK HOUR																	
7:45 AM	to 8:45 AM	522	0	278	0	351	364	1	0	0	0	0	0	0	398	564	0
PM SYSTEM PEAK HOUR																	
5:00 PM	to 6:00 PM	697	0	605	0	729	489	0	0	0	0	0	0	0	473	943	0

PEAK HOUR FACTORS

	Southbound Cascades Pky				Westbound Church Rd				Northbound Cascades Pky				Eastbound Church Rd			
	Right	Thru	Left	Peds	Right	Thru	Left	Peds	Right	Thru	Left	Peds	Right	Thru	Left	Peds
AM PEAK HOUR	0.85	0.00	0.83	N/A	0.86	0.95	0.25	N/A	0.00	0.00	0.00	N/A	0.00	0.93	0.94	N/A
PM PEAK HOUR	0.89	0.00	0.89	N/A	0.95	0.87	0.00	N/A	0.00	0.00	0.00	N/A	0.00	0.88	0.89	N/A

Overall AM PEAK HOUR FACTOR = 0.92

Overall PM PEAK HOUR FACTOR = 0.94

AM Period Intersection Volume: 5896

PM Period Intersection Volume: 10511

Date of Counts: Thursday, June 05, 2008

AM Weather Conditions:

PM Weather Conditions:

AM INTERSECTION PEAK VOLUMES

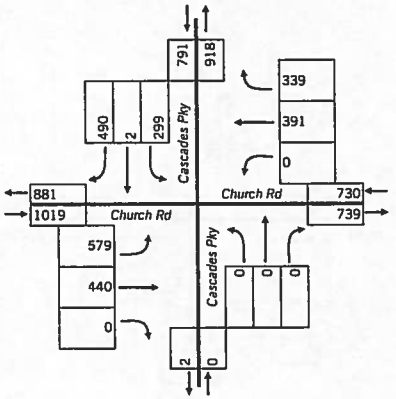

AM SYSTEM PEAK VOLUMES

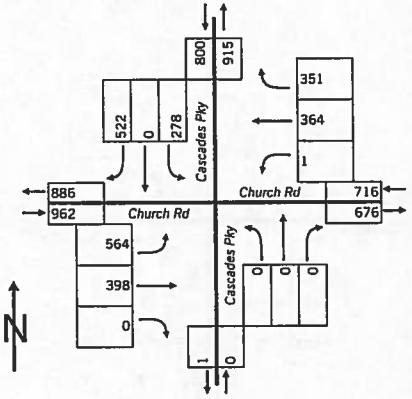

PM INTERSECTION PEAK VOLUMES

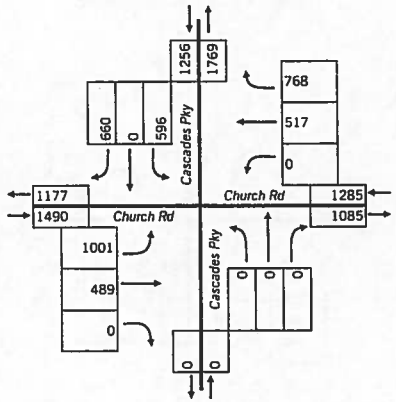

PM SYSTEM PEAK VOLUMES

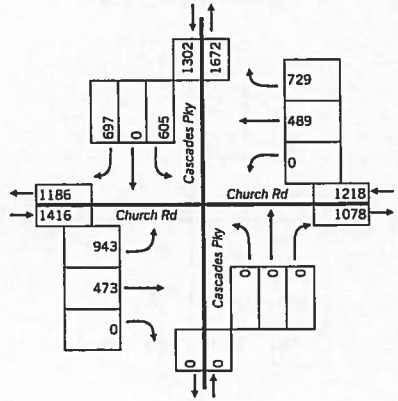

Gorove/Slade Associates

Project Name	Kincora
Project Number	2041-001
Project Location	Loudoun County
Data Source	Gorove/Slade Associates

Intersection: **Cascades and Nokes Boulevard**

AM PEAK

	Direction:	Southbound				Westbound				Northbound				Eastbound			
	Roadway:	Cascades				Nokes				Cascades				Nokes			
	Movement:	Right	Thru	Left	Peds	Right	Thru	Left	Peds	Right	Thru	Left	Peds	Right	Thru	Left	Peds
6:00 AM to 6:15 AM		9	63	0	0	1	10	26	0	11	55	5	0	4	8	6	0
6:15 AM to 6:30 AM		12	74	0	0	2	9	41	0	20	56	8	0	3	4	8	0
6:30 AM to 6:45 AM		8	94	0	0	1	14	40	0	30	66	9	0	5	6	9	0
6:45 AM to 7:00 AM		16	110	2	0	0	11	37	0	24	108	21	0	18	8	7	0
7:00 AM to 7:15 AM		27	117	5	0	1	15	45	0	38	106	28	0	17	14	6	0
7:15 AM to 7:30 AM		30	103	0	0	3	12	28	0	43	129	18	0	13	10	21	0
7:30 AM to 7:45 AM		23	134	0	0	9	30	62	0	57	120	24	0	18	14	20	0
7:45 AM to 8:00 AM		24	174	1	0	2	26	66	0	70	140	31	3	13	6	14	1
8:00 AM to 8:15 AM		35	149	0	0	4	39	33	0	50	150	43	0	30	9	20	0
8:15 AM to 8:30 AM		32	157	1	0	7	18	52	0	49	126	39	1	16	12	18	0
8:30 AM to 8:45 AM		25	166	2	1	5	30	39	0	51	177	48	0	20	11	20	0
8:45 AM to 9:00 AM		22	193	0	0	8	54	49	0	43	145	50	0	25	7	22	0

PM PEAK

	Direction:	Southbound				Westbound				Northbound				Eastbound			
	Roadway:	Cascades				Nokes				Cascades				Nokes			
	Movement:	Right	Thru	Left	Peds	Right	Thru	Left	Peds	Right	Thru	Left	Peds	Right	Thru	Left	Peds
4:00 PM to 4:15 PM						16	48	40	0	57	232	49	0				
4:15 PM to 4:30 PM		56	158	1	0	12	33	44	0	54	232	42	0	51	33	71	0
4:30 PM to 4:45 PM		62	188	0	0	5	43	62	0	72	191	51	0	54	37	73	0
4:45 PM to 5:00 PM		50	194	3	0	5	35	51	0	65	266	54	0	47	44	62	0
5:00 PM to 5:15 PM		83	202	0	0	7	30	82	0	60	268	44	0	66	52	66	0
5:15 PM to 5:30 PM		56	208	0	0	7	42	55	0	82	325	67	0	55	51	91	0
5:30 PM to 5:45 PM		59	231	3	0	10	28	58	0	84	302	59	0	64	37	80	0
5:45 PM to 6:00 PM		60	207	1	0	9	35	43	0	72	292	74	0	75	37	92	0
6:00 PM to 6:15 PM		73	200	2	0	5	32	43	0	87	340	55	0	81	40	76	0
6:15 PM to 6:30 PM		67	219	0	0	6	32	55	0	65	301	62	0	65	44	98	0
6:30 PM to 6:45 PM		48	189	1	0	6	27	39	0	48	282	40	0	68	42	75	0
6:45 PM to 7:00 PM		60	216	2	0	4	28	47	0	44	216	36	0	54	39	77	0

PEAK HOURS

	Direction:	Southbound				Westbound				Northbound				Eastbound			
	Roadway:	Cascades				Nokes				Cascades				Nokes			
	Movement:	Right	Thru	Left	Peds	Right	Thru	Left	Peds	Right	Thru	Left	Peds	Right	Thru	Left	Peds
AM INTERSECTION PEAK HOUR																	
8:00 AM to 9:00 AM		114	665	3	1	24	141	173	0	193	598	180	1	91	39	80	0
PM INTERSECTION PEAK HOUR																	
5:15 PM to 6:15 PM		248	846	6	0	31	137	199	0	325	1259	255	0	275	165	339	0
AM SYSTEM PEAK HOUR																	
7:45 AM to 8:45 AM		116	646	4	1	18	113	190	0	220	593	161	4	79	38	72	1
PM SYSTEM PEAK HOUR																	
5:00 PM to 6:00 PM		258	848	4	0	33	135	238	0	298	1187	244	0	260	177	329	0

PEAK HOUR FACTORS	Southbound Cascades				Westbound Nokes				Northbound Cascades				Eastbound Nokes			
	Right	Thru	Left	Peds	Right	Thru	Left	Peds	Right	Thru	Left	Peds	Right	Thru	Left	Peds
AM PEAK HOUR	0.83	0.93	0.50	N/A	0.64	0.72	0.72	N/A	0.79	0.84	0.84	N/A	0.66	0.79	0.90	N/A
PM PEAK HOUR	0.78	0.92	0.33	N/A	0.83	0.80	0.73	N/A	0.89	0.91	0.82	N/A	0.87	0.85	0.89	N/A

Overall AM PEAK HOUR FACTOR = 0.95

Overall PM PEAK HOUR FACTOR = 0.97

AM Period Intersection Volume: 5287

PM Period Intersection Volume: 10690

Date of Counts: Thursday, June 05, 2008

AM Weather Conditions:

PM Weather Conditions:

AM INTERSECTION PEAK VOLUMES

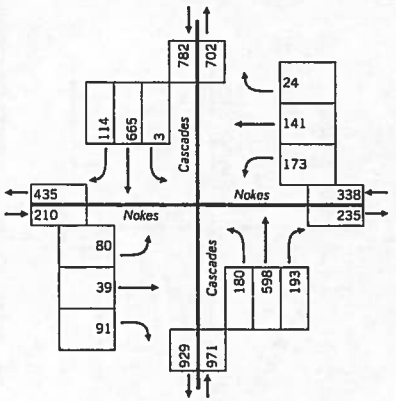

AM SYSTEM PEAK VOLUMES

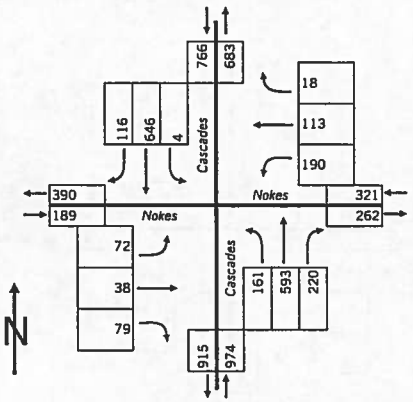

PM INTERSECTION PEAK VOLUMES

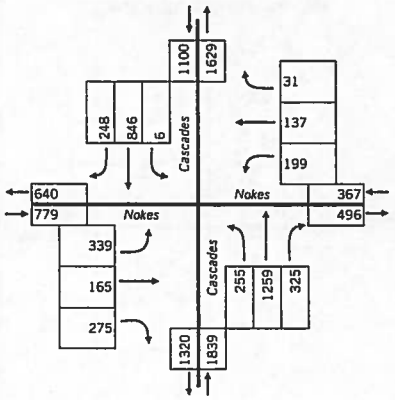

PM SYSTEM PEAK VOLUMES

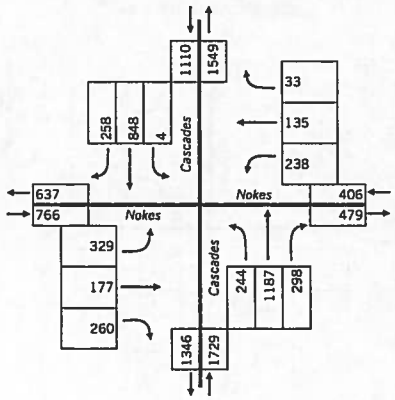

Gorove/Slade Associates

Project Name	Kincora
Project Number	2041-001
Project Location	Loudoun County
Data Source	Gorove/Slade Associates

Intersection: Cascades Parkway and Woodland Rd

AM PEAK

			Southbound Cascades				Westbound Woodland				Northbound Cascades				Eastbound Woodland			
Direction: / Roadway: / Movement:			Right	Thru	Left	Peds	Right	Thru	Left	Peds	Right	Thru	Left	Peds	Right	Thru	Left	Peds
6:00 AM	to	6:15 AM	10	66							0	61	23	0	7		8	
6:15 AM	to	6:30 AM	23	83							0	83	28	0	10		26	
6:30 AM	to	6:45 AM	25	96							0	87	27	0	9		9	
6:45 AM	to	7:00 AM	34	116							0	130	45	1	6		23	
7:00 AM	to	7:15 AM	40	135							0	148	24	0	15		30	
7:15 AM	to	7:30 AM	30	120							0	142	24	0	19		35	
7:30 AM	to	7:45 AM	35	156							0	172	28	0	9		18	
7:45 AM	to	8:00 AM	43	188							0	234	23	0	14		30	
8:00 AM	to	8:15 AM	31	175							0	223	27	0	12		25	
8:15 AM	to	8:30 AM	37	175							0	218	27	0	9		22	
8:30 AM	to	8:45 AM	31	191							0	282	19	0	19		20	
8:45 AM	to	9:00 AM	25	226							0	284	32	0	15		16	

PM PEAK

			Southbound Cascades				Westbound Woodland				Northbound Cascades				Eastbound Woodland			
Direction: / Roadway: / Movement:			Right	Thru	Left	Peds	Right	Thru	Left	Peds	Right	Thru	Left	Peds	Right	Thru	Left	Peds
4:00 PM	to	4:15 PM	19	227							0	246	51	0	39		50	
4:15 PM	to	4:30 PM	24	233							0	267	37	0	23		29	
4:30 PM	to	4:45 PM	17	265							0	256	42	0	58		50	
4:45 PM	to	5:00 PM	31	263							0	306	27	0	42		41	
5:00 PM	to	5:15 PM	24	285							0	356	34	0	63		56	
5:15 PM	to	5:30 PM	31	272							0	374	36	0	47		53	
5:30 PM	to	5:45 PM	41	275							0	356	39	0	46		49	
5:45 PM	to	6:00 PM	20	284							0	385	27	0	27		53	
6:00 PM	to	6:15 PM	28	305							0	391	44	0	47		52	
6:15 PM	to	6:30 PM	28	273							0	396	34	0	30		34	
6:30 PM	to	6:45 PM	24	271							0	307	24	0	34		27	
6:45 PM	to	7:00 PM	20	253							0	285	30	0	57		39	

PEAK HOURS

			Southbound Cascades				Westbound Woodland				Northbound Cascades				Eastbound Woodland			
Direction: / Roadway: / Movement:			Right	Thru	Left	Peds	Right	Thru	Left	Peds	Right	Thru	Left	Peds	Right	Thru	Left	Peds
AM INTERSECTION PEAK HOUR																		
8:00 AM	to	9:00 AM	124	767	0	0	0	0	0	0	0	1007	105	0	55	0	83	0
PM INTERSECTION PEAK HOUR																		
5:15 PM	to	6:15 PM	120	1136	0	0	0	0	0	0	0	1506	146	0	167	0	207	0
AM SYSTEM PEAK HOUR																		
7:45 AM	to	8:45 AM	142	729	0	0	0	0	0	0	0	957	96	0	54	0	97	0
PM SYSTEM PEAK HOUR																		
5:00 PM	to	6:00 PM	116	1116	0	0	0	0	0	0	0	1471	136	0	183	0	211	0

PEAK HOUR FACTORS

	Southbound Cascades				Westbound Woodland				Northbound Cascades				Eastbound Woodland			
	Right	Thru	Left	Peds	Right	Thru	Left	Peds	Right	Thru	Left	Peds	Right	Thru	Left	Peds
AM PEAK HOUR	0.83	0.95	0.00	N/A	0.00	0.00	0.00	N/A	0.00	0.85	0.89	N/A	0.71	0.00	0.81	N/A
PM PEAK HOUR	0.71	0.98	0.00	N/A	0.00	0.00	0.00	N/A	0.00	0.96	0.87	N/A	0.73	0.00	0.94	N/A

Overall AM PEAK HOUR FACTOR = 0.92

Overall PM PEAK HOUR FACTOR = 0.99

AM Period Intersection Volume: 4893

PM Period Intersection Volume: 8909

Date of Counts: Thursday, June 05, 2008

AM Weather Conditions:

PM Weather Conditions:

AM INTERSECTION PEAK VOLUMES

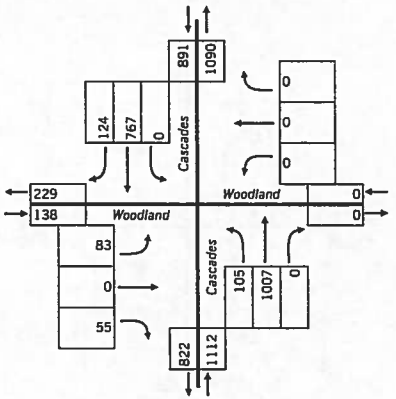

AM SYSTEM PEAK VOLUMES

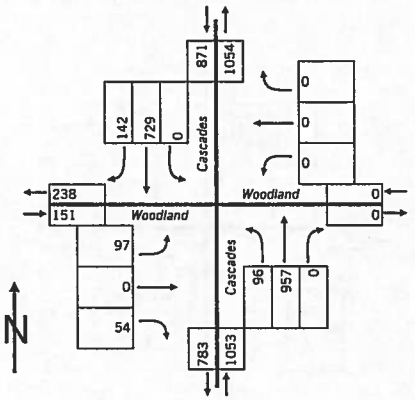

PM INTERSECTION PEAK VOLUMES

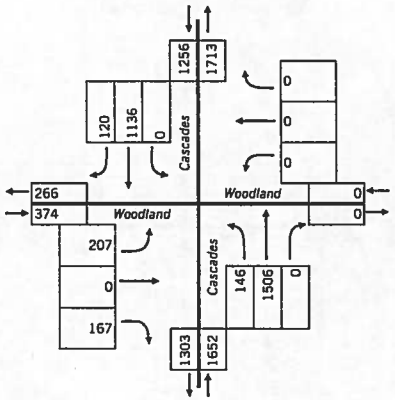

PM SYSTEM PEAK VOLUMES

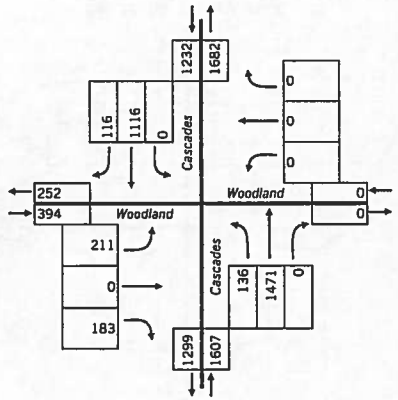

Gorove/Slade Associates

Project Name	Kincora
Project Number	2041-001
Project Location	Loudoun County
Data Source	Gorove/Slade Associates

Intersection: Lexington and Route 7

AM PEAK

	Direction:	Southbound				Westbound				Northbound				Eastbound			
	Roadway:	Lexington				Route 7				Lexington				Route 7			
	Movement:	Right	Thru	Left	Peds	Right	Thru	Left	Peds	Right	Thru	Left	Peds	Right	Thru	Left	Peds
6:00 AM	to 6:15 AM	1	0	2	0	0	220	6	0	50	0	0	0	7	826	5	0
6:15 AM	to 6:30 AM	0	0	0	0	0	282	5	0	54	0	1	0	1	1071	0	0
6:30 AM	to 6:45 AM	0	1	2	0	1	336	8	0	83	2	1	0	2	1133	2	0
6:45 AM	to 7:00 AM	0	1	2	0	4	364	14	0	104	1	2	0	3	1088	0	0
7:00 AM	to 7:15 AM	4	0	0	0	1	424	14	0	110	1	0	0	1	1073	0	0
7:15 AM	to 7:30 AM	1	0	3	0	2	486	19	0	159	2	0	3	15	829	0	0
7:30 AM	to 7:45 AM	1	1	6	0	0	522	22	0	253	2	0	6	2	860	0	0
7:45 AM	to 8:00 AM	2	1	2	0	0	542	36	0	333	3	0	0	2	900	2	0
8:00 AM	to 8:15 AM	1	2	1	0	1	454	31	0	230	64	0	0	2	779	32	0
8:15 AM	to 8:30 AM	2	2	8	0	1	515	36	0	148	91	0	0	4	812	1	0
8:30 AM	to 8:45 AM	0	2	2	0	0	485	37	0	221	3	0	0	4	834	5	0
8:45 AM	to 9:00 AM	1	0	3	0	7	453	28	0	162	2	0	0	4	860	3	0

PM PEAK

	Direction:	Southbound				Westbound				Northbound				Eastbound			
	Roadway:	Lexington				Route 7				Lexington				Route 7			
	Movement:	Right	Thru	Left	Peds	Right	Thru	Left	Peds	Right	Thru	Left	Peds	Right	Thru	Left	Peds
4:00 PM	to 4:15 PM	4	1	0	0	2	897	49	0	33	0	2	0	5	535	5	0
4:15 PM	to 4:30 PM	5	1	3	0	2	976	57	0	38	4	1	0	2	709	4	0
4:30 PM	to 4:45 PM	4	3	2	0	3	1002	44	0	42	5	1	0	8	631	4	0
4:45 PM	to 5:00 PM	5	0	2	0	4	985	66	0	42	6	1	0	9	592	15	0
5:00 PM	to 5:15 PM	4	1	2	0	6	1064	63	0	51	2	2	0	2	624	104	0
5:15 PM	to 5:30 PM	6	3	5	0	4	1003	64	0	59	1	8	0	6	722	3	0
5:30 PM	to 5:45 PM	2	2	5	0	3	1061	60	0	64	1	11	0	2	647	3	0
5:45 PM	to 6:00 PM	1	1	2	0	4	1022	67	0	57	0	2	0	3	530	90	0
6:00 PM	to 6:15 PM	3	2	2	0	2	966	79	0	47	3	2	0	5	568	3	0
6:15 PM	to 6:30 PM	1	1	4	0	2	1007	111	0	36	1	1	0	0	555	7	0
6:30 PM	to 6:45 PM	2	0	2	0	5	988	60	0	28	1	5	3	3	456	2	0
6:45 PM	to 7:00 PM	7	1	2	0	3	901	54	0	31	2	5	0	2	527	3	0

PEAK HOURS

	Direction:	Southbound				Westbound				Northbound				Eastbound			
	Roadway:	Lexington				Route 7				Lexington				Route 7			
	Movement:	Right	Thru	Left	Peds	Right	Thru	Left	Peds	Right	Thru	Left	Peds	Right	Thru	Left	Peds
AM INTERSECTION PEAK HOUR																	
7:30 AM	to 8:30 AM	6	6	17	0	2	2033	125	0	964	160	0	6	10	3351	35	0
PM INTERSECTION PEAK HOUR																	
5:00 PM	to 6:00 PM	13	7	14	0	17	4150	254	0	231	4	23	0	13	2523	200	0
AM SYSTEM PEAK HOUR																	
7:45 AM	to 8:45 AM	5	7	13	0	2	1996	140	0	932	161	0	0	12	3325	40	0
PM SYSTEM PEAK HOUR																	
5:00 PM	to 6:00 PM	13	7	14	0	17	4150	254	0	231	4	23	0	13	2523	200	0

PEAK HOUR FACTORS

	Southbound Lexington				Westbound Route 7				Northbound Lexington				Eastbound Route 7			
	Right	Thru	Left	Peds	Right	Thru	Left	Peds	Right	Thru	Left	Peds	Right	Thru	Left	Peds
AM PEAK HOUR	0.63	0.38	0.41	N/A	0.50	0.92	0.95	N/A	0.70	0.44	0.00	N/A	0.75	0.92	0.31	N/A
PM PEAK HOUR	0.54	0.58	0.70	N/A	0.71	0.98	0.95	N/A	0.90	0.50	0.52	N/A	0.54	0.87	0.48	N/A

Overall AM PEAK HOUR FACTOR = 0.91

Overall PM PEAK HOUR FACTOR = 0.97

AM Period Intersection Volume: 18654

PM Period Intersection Volume: 20758

Date of Counts: Tuesday, June 03, 2008

AM Weather Conditions:

PM Weather Conditions:

AM INTERSECTION PEAK VOLUMES

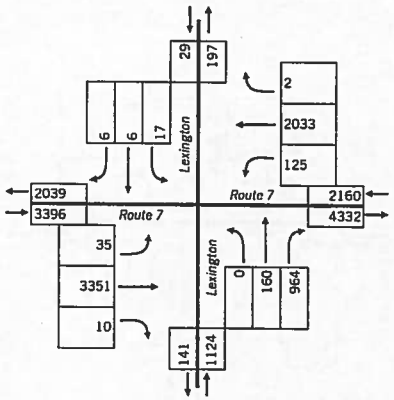

AM SYSTEM PEAK VOLUMES

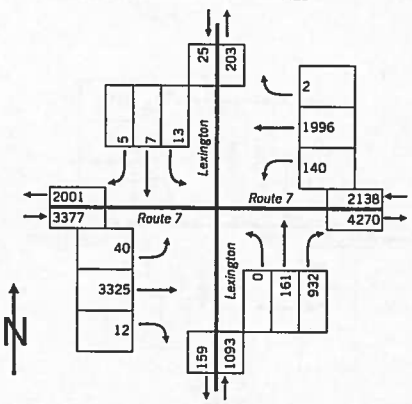

PM INTERSECTION PEAK VOLUMES

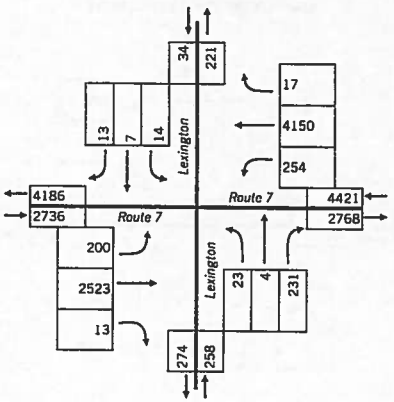

PM SYSTEM PEAK VOLUMES

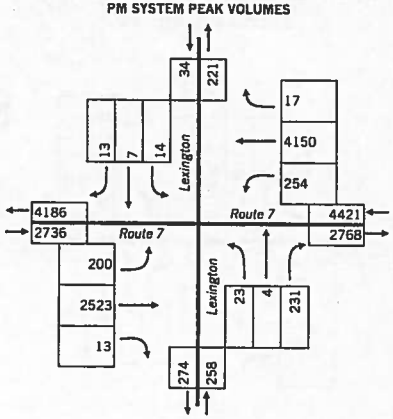

Grove/Slade Associates

Project Name	Kincora
Project Number	2041-001
Project Location	Loudoun County
Data Source	Grove/Slade Associates

Intersection: Church Road and Ruritan Dr

Date of Counts: Thursday, June 05, 2008

AM Weather Conditions: _____ **PM Weather Conditions:** _____

AM PEAK

			Southbound Ruritan				Westbound Church				Northbound Ruritan				Eastbound Church			
Direction: / Roadway: / Movement:			Right	Thru	Left	Peds	Right	Thru	Left	Peds	Right	Thru	Left	Peds	Right	Thru	Left	Peds
6:00 AM	to	6:15 AM	3	1	2	0	1	109	16	0	8	1	15	0	10	45	3	0
6:15 AM	to	6:30 AM	1	0	1	0	3	142	29	0	14	1	13	0	19	99	5	0
6:30 AM	to	6:45 AM	0	3	0	0	2	168	24	0	19	5	23	0	28	91	18	0
6:45 AM	to	7:00 AM	5	2	2	0	0	169	29	0	23	5	32	0	54	142	16	0
7:00 AM	to	7:15 AM	12	3	0	0	2	162	23	0	24	1	14	0	30	143	7	0
7:15 AM	to	7:30 AM	3	1	4	0	2	185	31	0	40	0	11	0	43	185	2	0
7:30 AM	to	7:45 AM	9	3	8	0	0	236	39	0	28	1	22	0	51	146	5	0
7:45 AM	to	8:00 AM	4	0	1	0	5	319	75	1	32	0	42	0	55	204	4	0
8:00 AM	to	8:15 AM	3	0	0	0	2	239	53	0	42	0	28	0	49	182	4	0
8:15 AM	to	8:30 AM	5	2	1	0	0	248	48	0	38	0	17	0	46	196	5	0
8:30 AM	to	8:45 AM	2	1	2	0	0	236	42	0	32	3	31	0	38	222	11	0
8:45 AM	to	9:00 AM	4	0	0	0	0	271	62	0	39	1	37	1	34	214	5	0

PM PEAK

			Southbound Ruritan				Westbound Church				Northbound Ruritan				Eastbound Church			
Direction: / Roadway: / Movement:			Right	Thru	Left	Peds	Right	Thru	Left	Peds	Right	Thru	Left	Peds	Right	Thru	Left	Peds
4:00 PM	to	4:15 PM	2	2	2	0	1	215	41	0	54	0	52	2	12	272	6	0
4:15 PM	to	4:30 PM	7	1	2	0	1	196	40	0	58	3	29	0	37	248	1	0
4:30 PM	to	4:45 PM	2	2	2	0	1	230	43	0	68	1	45	0	39	259	12	0
4:45 PM	to	5:00 PM	7	9	9	0	1	216	52	0	44	2	39	0	45	275	12	0
5:00 PM	to	5:15 PM	7	1	5	0	0	259	32	0	60	0	61	0	27	320	3	0
5:15 PM	to	5:30 PM	2	0	0	0	0	282	45	0	80	0	35	0	34	340	8	0
5:30 PM	to	5:45 PM	4	1	2	0	0	209	28	0	58	1	54	0	34	351	9	0
5:45 PM	to	6:00 PM	4	1	0	0	0	215	60	0	64	1	30	0	30	322	5	0
6:00 PM	to	6:15 PM	4	2	0	0	0	275	53	0	69	2	39	0	43	357	5	0
6:15 PM	to	6:30 PM	6	1	2	0	1	185	64	0	50	5	36	0	49	292	5	0
6:30 PM	to	6:45 PM	4	1	3	0	4	217	58	0	66	3	24	0	37	293	7	0
6:45 PM	to	7:00 PM	1	1	1	0	2	200	68	0	58	3	23	0	25	244	4	0

PEAK HOURS

			Southbound Ruritan				Westbound Church				Northbound Ruritan				Eastbound Church			
Direction: / Roadway: / Movement:			Right	Thru	Left	Peds	Right	Thru	Left	Peds	Right	Thru	Left	Peds	Right	Thru	Left	Peds
AM INTERSECTION PEAK HOUR																		
7:45 AM	to	8:45 AM	14	3	4	0	7	1042	218	1	144	3	118	0	188	804	24	0
PM INTERSECTION PEAK HOUR																		
5:15 PM	to	6:15 PM	14	4	2	0	0	981	186	0	271	4	158	0	141	1370	27	0
AM SYSTEM PEAK HOUR																		
7:45 AM	to	8:45 AM	14	3	4	0	7	1042	218	1	144	3	118	0	188	804	24	0
PM SYSTEM PEAK HOUR																		
5:00 PM	to	6:00 PM	17	3	7	0	0	965	165	0	262	2	180	0	125	1333	25	0

PEAK HOUR FACTORS

	Southbound Ruritan				Westbound Church				Northbound Ruritan				Eastbound Church			
	Right	Thru	Left	Peds	Right	Thru	Left	Peds	Right	Thru	Left	Peds	Right	Thru	Left	Peds
AM PEAK HOUR	0.70	0.38	0.50	N/A	0.35	0.82	0.73	N/A	0.86	0.25	0.70	N/A	0.85	0.91	0.55	N/A
PM PEAK HOUR	0.61	0.75	0.35	N/A	0.00	0.86	0.69	N/A	0.82	0.50	0.74	N/A	0.92	0.95	0.69	N/A

Overall AM PEAK HOUR FACTOR = 0.87

Overall PM PEAK HOUR FACTOR = 0.93

AM Period Intersection Volume: 6113

PM Period Intersection Volume: 8673

AM INTERSECTION PEAK VOLUMES

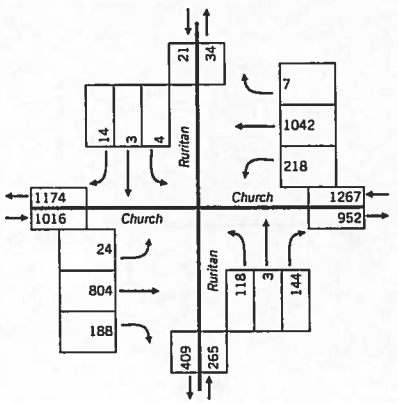

AM SYSTEM PEAK VOLUMES

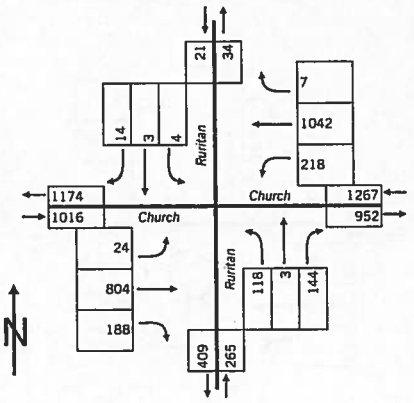

PM INTERSECTION PEAK VOLUMES

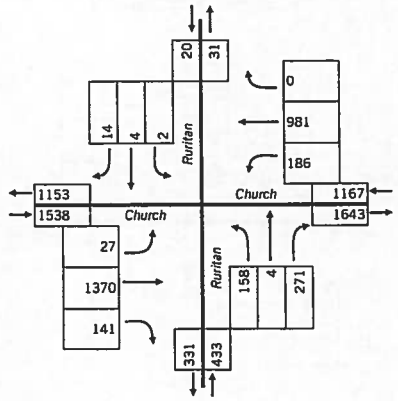

PM SYSTEM PEAK VOLUMES

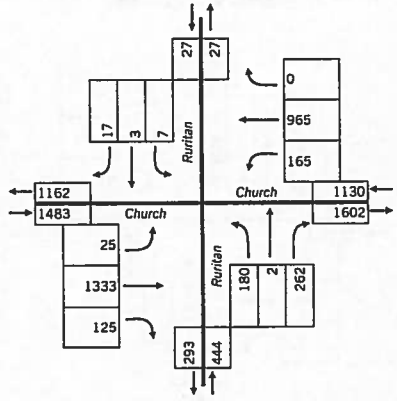

Gorove/Slade Associates

Project Name	Kincora
Project Number	2041-001
Project Location	Loudoun County
Data Source	Gorove/Slade Associates

Intersection: Algonkian Pky and Countryside Blvd

AM PEAK

			Southbound Algonkian				Westbound Countryside				Northbound Algonkian				Eastbound			
			Right	Thru	Left	Peds	Right	Thru	Left	Peds	Right	Thru	Left	Peds	Right	Thru	Left	Peds
6:00 AM	to	6:15 AM	0	42	3	0	6	0	4	0	9	21	0	0				
6:15 AM	to	6:30 AM	0	59	17	0	7	0	2	0	11	29	0	0				
6:30 AM	to	6:45 AM	0	81	23	0	9	0	3	1	8	26	0	1				
6:45 AM	to	7:00 AM	0	83	14	0	16	0	4	0	9	57	0	0				
7:00 AM	to	7:15 AM	0	106	30	0	19	0	5	0	17	55	0	0				
7:15 AM	to	7:30 AM	0	126	44	0	10	0	16	0	34	62	0	0				
7:30 AM	to	7:45 AM	0	159	75	0	37	0	32	0	63	70	0	2				
7:45 AM	to	8:00 AM	0	151	27	0	50	0	38	0	25	64	0	1				
8:00 AM	to	8:15 AM	0	126	50	0	38	0	23	0	6	80	0	0				
8:15 AM	to	8:30 AM	0	145	43	0	40	0	15	1	18	70	0	2				
8:30 AM	to	8:45 AM	0	122	39	0	63	0	13	7	21	86	0	2				
8:45 AM	to	9:00 AM	0	127	44	0	35	0	14	0	18	56	0	0				

PM PEAK

			Southbound Algonkian				Westbound Countryside				Northbound Algonkian				Eastbound			
			Right	Thru	Left	Peds	Right	Thru	Left	Peds	Right	Thru	Left	Peds	Right	Thru	Left	Peds
4:00 PM	to	4:15 PM	0	122	63	0	69	0	19	0	20	98	0	1				
4:15 PM	to	4:30 PM	0	119	43	0	45	0	20	1	16	115	0	0				
4:30 PM	to	4:45 PM	0	92	47	0	67	0	26	0	22	121	0	1				
4:45 PM	to	5:00 PM	0	104	61	0	71	0	13	0	22	147	0	2				
5:00 PM	to	5:15 PM	0	131	48	0	57	0	23	0	42	140	0	1				
5:15 PM	to	5:30 PM	0	111	53	0	68	1	26	7	28	144	0	0				
5:30 PM	to	5:45 PM	0	151	63	0	72	0	24	0	28	171	0	0				
5:45 PM	to	6:00 PM	0	135	86	0	65	0	39	0	19	139	0	0				
6:00 PM	to	6:15 PM	0	122	48	0	77	0	38	1	28	142	0	0				
6:15 PM	to	6:30 PM	0	151	51	0	87	0	24	0	25	184	0	0				
6:30 PM	to	6:45 PM	0	120	49	0	72	0	19	4	32	141	0	3				
6:45 PM	to	7:00 PM	0	127	49	0	58	1	27	6	25	140	0	0				

PEAK HOURS

			Southbound Algonkian				Westbound Countryside				Northbound Algonkian				Eastbound			
			Right	Thru	Left	Peds	Right	Thru	Left	Peds	Right	Thru	Left	Peds	Right	Thru	Left	Peds
AM INTERSECTION PEAK HOUR																		
7:30 AM	to	8:30 AM	0	581	195	0	165	0	108	1	112	284	0	5	0	0	0	0
PM INTERSECTION PEAK HOUR																		
5:30 PM	to	6:30 PM	0	559	248	0	301	0	125	1	100	636	0	0	0	0	0	0
AM SYSTEM PEAK HOUR																		
7:45 AM	to	8:45 AM	0	544	159	0	191	0	89	8	70	300	0	5	0	0	0	0
PM SYSTEM PEAK HOUR																		
5:00 PM	to	6:00 PM	0	528	250	0	262	1	112	7	117	594	0	1	0	0	0	0

PEAK HOUR FACTORS

	Southbound Algonkian				Westbound Countryside				Northbound Algonkian				Eastbound			
	Right	Thru	Left	Peds	Right	Thru	Left	Peds	Right	Thru	Left	Peds	Right	Thru	Left	Peds
AM PEAK HOUR	0.00	0.90	0.80	N/A	0.76	0.00	0.59	N/A	0.70	0.87	0.00	N/A	0.00	0.00	0.00	N/A
PM PEAK HOUR	0.00	0.87	0.73	N/A	0.91	0.25	0.72	N/A	0.70	0.87	0.00	N/A	0.00	0.00	0.00	N/A

Overall AM PEAK HOUR FACTOR = 0.95

Overall PM PEAK HOUR FACTOR = 0.92

AM Period Intersection Volume: 3150

PM Period Intersection Volume: 5243

Date of Counts: Wednesday, June 11, 2008

AM Weather Conditions:

PM Weather Conditions:

AM INTERSECTION PEAK VOLUMES

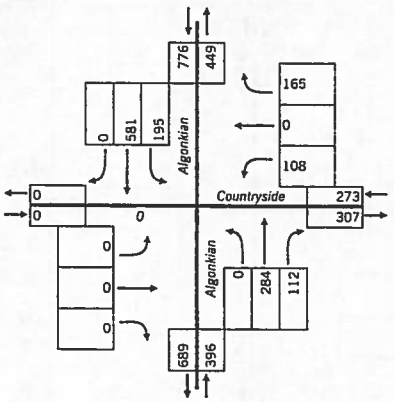

AM SYSTEM PEAK VOLUMES

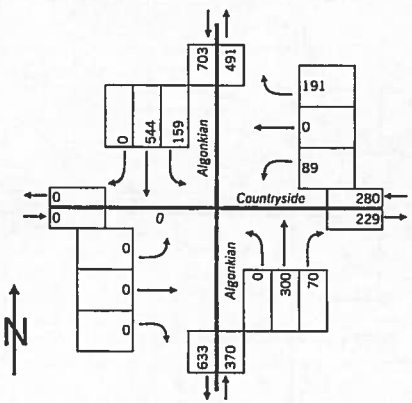

PM INTERSECTION PEAK VOLUMES

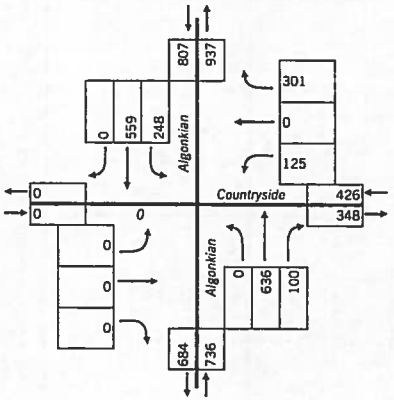

PM SYSTEM PEAK VOLUMES

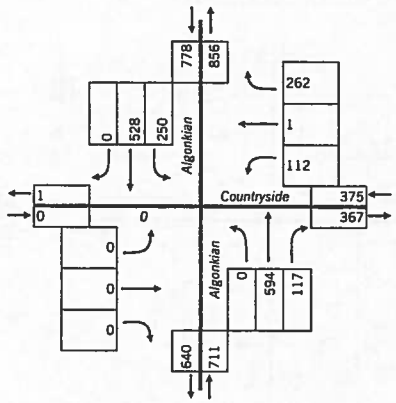

Gorove/Slade Associates

Project Name	Kincora
Project Number	2041-001
Project Location	Loudoun County
Data Source	Gorove/Slade Associates

Intersection: Algonkian Pky and Winding Road

AM PEAK

			Southbound Algonkian				Westbound Winding Rd				Northbound Algonkian				Eastbound Winding Rd			
Direction: / Roadway: / Movement:			Right	Thru	Left	Peds	Right	Thru	Left	Peds	Right	Thru	Left	Peds	Right	Thru	Left	Peds
6:00 AM	to	6:15 AM	1	62	0	0	1	0	8	0	2	25	4	1	18	0	2	0
6:15 AM	to	6:30 AM	2	75	0	0	3	1	13	0	2	20	5	0	15	0	3	0
6:30 AM	to	6:45 AM	0	110	1	0	4	0	13	0	3	25	8	0	28	0	3	0
6:45 AM	to	7:00 AM	4	105	0	0	4	1	19	0	2	53	9	0	24	0	8	0
7:00 AM	to	7:15 AM	6	136	0	0	6	0	9	0	3	57	2	0	29	0	3	0
7:15 AM	to	7:30 AM	5	165	4	0	10	0	20	0	4	65	7	0	26	1	10	0
7:30 AM	to	7:45 AM	9	188	4	0	12	0	19	0	2	68	8	0	33	1	19	0
7:45 AM	to	8:00 AM	18	181	3	0	8	5	16	0	2	56	10	0	32	1	9	0
8:00 AM	to	8:15 AM	2	163	2	0	8	4	18	0	7	65	6	0	37	1	12	0
8:15 AM	to	8:30 AM	14	179	1	0	11	0	19	0	3	62	7	0	41	0	8	0
8:30 AM	to	8:45 AM	5	155	3	0	11	0	18	1	3	84	12	0	35	0	12	0
8:45 AM	to	9:00 AM	5	150	1	0	3	1	19	0	0	60	9	0	23	0	8	0

PM PEAK

			Southbound Algonkian				Westbound Winding Rd				Northbound Algonkian				Eastbound Winding Rd			
Direction: / Roadway: / Movement:			Right	Thru	Left	Peds	Right	Thru	Left	Peds	Right	Thru	Left	Peds	Right	Thru	Left	Peds
4:00 PM	to	4:15 PM	13	121	4	0	3	0	8	0	11	123	25	0	12	1	10	0
4:15 PM	to	4:30 PM	20	129	6	0	5	0	5	0	8	149	25	0	19	0	4	0
4:30 PM	to	4:45 PM	9	108	4	0	3	0	11	0	15	146	24	0	19	0	7	0
4:45 PM	to	5:00 PM	12	109	7	0	2	0	6	0	20	166	35	0	15	0	4	0
5:00 PM	to	5:15 PM	15	123	6	0	10	0	8	0	17	178	37	0	26	0	4	0
5:15 PM	to	5:30 PM	22	120	7	0	3	0	16	0	20	170	37	0	19	2	6	0
5:30 PM	to	5:45 PM	16	157	6	0	9	0	5	0	20	202	32	0	13	0	9	0
5:45 PM	to	6:00 PM	19	133	10	0	8	0	8	0	26	182	42	0	24	0	10	0
6:00 PM	to	6:15 PM	18	110	6	0	5	0	11	0	17	172	37	0	14	0	4	0
6:15 PM	to	6:30 PM	23	134	1	0	7	1	12	0	20	189	41	0	23	1	10	0
6:30 PM	to	6:45 PM	16	138	9	0	6	0	4	0	25	161	33	0	12	2	6	0
6:45 PM	to	7:00 PM					4	0	9	0	20	163	29	0				

PEAK HOURS

			Southbound Algonkian				Westbound Winding Rd				Northbound Algonkian				Eastbound Winding Rd			
Direction: / Roadway: / Movement:			Right	Thru	Left	Peds	Right	Thru	Left	Peds	Right	Thru	Left	Peds	Right	Thru	Left	Peds
AM INTERSECTION PEAK HOUR																		
7:30 AM	to	8:30 AM	43	711	10	0	39	9	72	0	14	251	31	0	143	3	48	0
PM INTERSECTION PEAK HOUR																		
5:30 PM	to	6:30 PM	76	534	23	0	29	1	36	0	83	745	152	0	74	1	33	0
AM SYSTEM PEAK HOUR																		
7:45 AM	to	8:45 AM	39	678	9	0	38	9	71	1	15	267	35	0	145	2	41	0
PM SYSTEM PEAK HOUR																		
5:00 PM	to	6:00 PM	72	533	29	0	30	0	37	0	83	732	148	0	82	2	29	0

PEAK HOUR FACTORS

	Southbound Algonkian				Westbound Winding Rd				Northbound Algonkian				Eastbound Winding Rd			
	Right	Thru	Left	Peds	Right	Thru	Left	Peds	Right	Thru	Left	Peds	Right	Thru	Left	Peds
AM PEAK HOUR	0.54	0.94	0.75	N/A	0.86	0.45	0.93	N/A	0.54	0.79	0.73	N/A	0.88	0.50	0.85	N/A
PM PEAK HOUR	0.82	0.85	0.73	N/A	0.75	0.00	0.58	N/A	0.80	0.91	0.88	N/A	0.79	0.25	0.73	N/A

Overall AM PEAK HOUR FACTOR = 0.98

Overall PM PEAK HOUR FACTOR = 0.95

AM Period Intersection Volume: 3245

PM Period Intersection Volume: 4693

Date of Counts: Wednesday, June 11, 2008

AM Weather Conditions:

PM Weather Conditions:

AM INTERSECTION PEAK VOLUMES

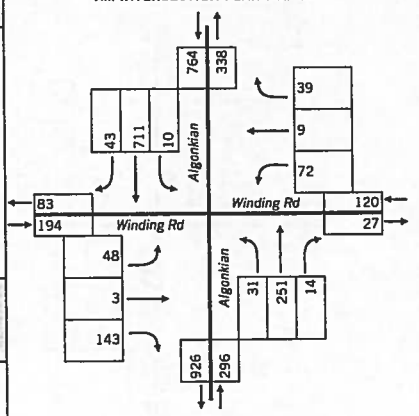

AM SYSTEM PEAK VOLUMES

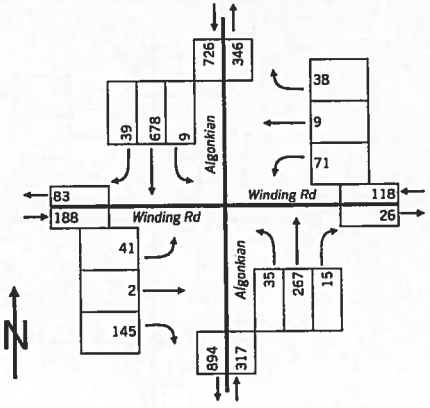

PM INTERSECTION PEAK VOLUMES

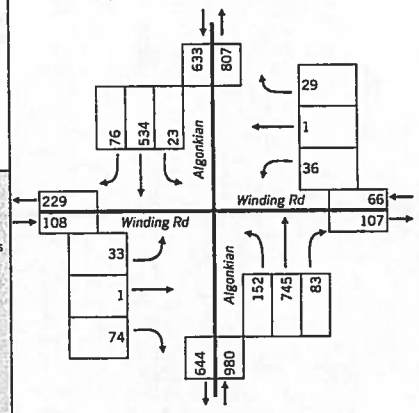

PM SYSTEM PEAK VOLUMES

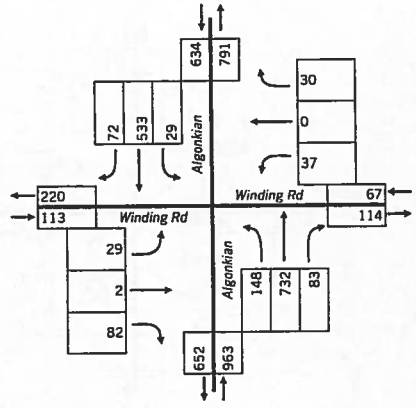

Gorove/Slade Associates

Project Name	Kincora
Project Number	2041-001
Project Location	Loudoun County
Data Source	Gorove/Slade Associates

Intersection: **Atlantic Boulevard and Nokes Boulevard**

AM PEAK

			Southbound Atlantic				Westbound Nokes				Northbound Atlantic				Eastbound Nokes			
			Right	Thru	Left	Peds	Right	Thru	Left	Peds	Right	Thru	Left	Peds	Right	Thru	Left	Peds
6:00 AM	to	6:15 AM	7	13	3	1	0	12	6	0	10	4	2	0	6	11	0	0
6:15 AM	to	6:30 AM	4	20	1	1	1	21	5	0	8	6	4	0	2	28	2	0
6:30 AM	to	6:45 AM	5	31	5	0	0	40	16	0	11	15	6	0	7	19	4	0
6:45 AM	to	7:00 AM	6	23	1	0	2	32	24	0	28	11	4	0	10	62	4	0
7:00 AM	to	7:15 AM	11	22	4	0	1	35	14	0	28	8	8	0	2	54	0	0
7:15 AM	to	7:30 AM	13	27	2	1	2	44	20	0	26	14	10	0	8	68	2	0
7:30 AM	to	7:45 AM	16	39	5	1	3	43	14	0	27	14	9	0	10	64	2	0
7:45 AM	to	8:00 AM	22	48	6	0	2	73	40	0	29	21	17	0	10	47	1	0
8:00 AM	to	8:15 AM	20	46	9	0	2	46	27	0	24	30	4	0	26	91	2	0
8:15 AM	to	8:30 AM	16	48	9	1	3	45	30	0	25	13	1	0	13	47	1	0
8:30 AM	to	8:45 AM	12	36	5	0	3	53	24	1	34	22	5	0	6	92	5	0
8:45 AM	to	9:00 AM	21	43	5	0	4	46	39	0	18	39	16	0	11	90	4	0

PM PEAK

			Southbound Atlantic				Westbound Nokes				Northbound Atlantic				Eastbound Nokes			
			Right	Thru	Left	Peds	Right	Thru	Left	Peds	Right	Thru	Left	Peds	Right	Thru	Left	Peds
4:00 PM	to	4:15 PM	50	61	6	0	15	107	63	2	62	64	16	0	18	63	53	0
4:15 PM	to	4:30 PM	36	56	7	1	11	86	49	0	45	67	29	12	14	118	33	0
4:30 PM	to	4:45 PM	34	40	8	3	9	120	74	0	90	98	28	0	9	79	5	0
4:45 PM	to	5:00 PM	34	73	3	0	16	86	86	0	102	65	32	0	13	104	66	0
5:00 PM	to	5:15 PM	45	50	7	2	16	188	56	0	96	109	57	0	13	77	52	0
5:15 PM	to	5:30 PM	46	51	10	0	24	133	57	0	101	64	25	0	15	102	72	3
5:30 PM	to	5:45 PM	47	47	8	0	24	113	59	0	41	84	23	0	16	94	46	0
5:45 PM	to	6:00 PM	51	58	8	0	15	125	51	0	49	89	26	0	19	99	41	0
6:00 PM	to	6:15 PM	44	52	7	0	14	106	62	0	46	94	25	0	17	103	73	0
6:15 PM	to	6:30 PM	57	53	3	0	9	83	71	0	39	86	25	0	14	89	45	0
6:30 PM	to	6:45 PM	57	62	9	0	18	100	59	0	48	67	20	0	15	101	82	0
6:45 PM	to	7:00 PM	36	50	2	0	9	89	67	0	47	64	17	0	12	94	80	0

PEAK HOURS

			Southbound Atlantic				Westbound Nokes				Northbound Atlantic				Eastbound Nokes			
			Right	Thru	Left	Peds	Right	Thru	Left	Peds	Right	Thru	Left	Peds	Right	Thru	Left	Peds
AM INTERSECTION PEAK HOUR																		
8:00 AM	to	9:00 AM	69	173	28	1	12	190	120	1	101	104	26	0	56	320	12	0
PM INTERSECTION PEAK HOUR																		
4:45 PM	to	5:45 PM	172	221	28	2	30	520	258	0	340	322	137	12	57	377	236	3
AM SYSTEM PEAK HOUR																		
7:45 AM	to	8:45 AM	70	178	29	1	10	217	121	1	112	86	27	0	55	277	9	0
PM SYSTEM PEAK HOUR																		
5:00 PM	to	6:00 PM	189	206	33	2	79	559	223	0	287	346	131	0	63	372	211	3

PEAK HOUR FACTORS

	Southbound Atlantic				Westbound Nokes				Northbound Atlantic				Eastbound Nokes			
	Right	Thru	Left	Peds	Right	Thru	Left	Peds	Right	Thru	Left	Peds	Right	Thru	Left	Peds
AM PEAK HOUR	0.80	0.93	0.81	N/A	0.83	0.74	0.76	N/A	0.82	0.72	0.40	N/A	0.53	0.75	0.45	N/A
PM PEAK HOUR	0.93	0.89	0.83	N/A	0.82	0.74	0.94	N/A	0.71	0.79	0.57	N/A	0.83	0.91	0.73	N/A

Overall AM PEAK HOUR FACTOR = 0.91

Overall PM PEAK HOUR FACTOR = 0.88

AM Period Intersection Volume: 2736

PM Period Intersection Volume: 7524

Date of Counts: Tuesday, June 10, 2008

AM Weather Conditions:

PM Weather Conditions:

AM INTERSECTION PEAK VOLUMES

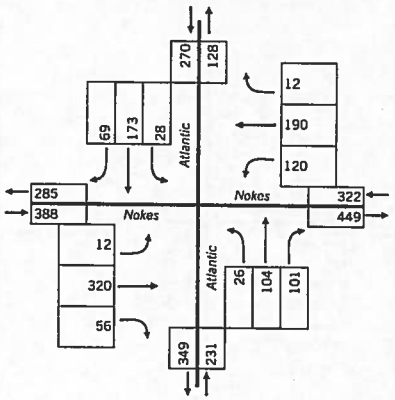

AM SYSTEM PEAK VOLUMES

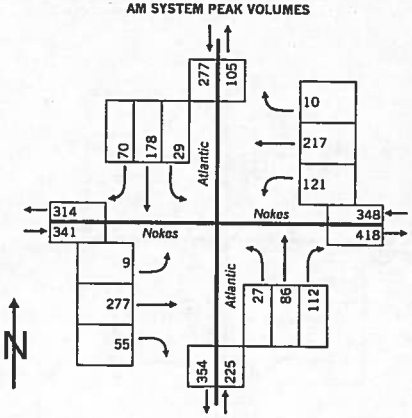

PM INTERSECTION PEAK VOLUMES

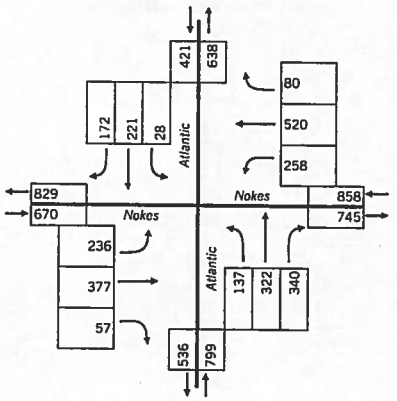

PM SYSTEM PEAK VOLUMES

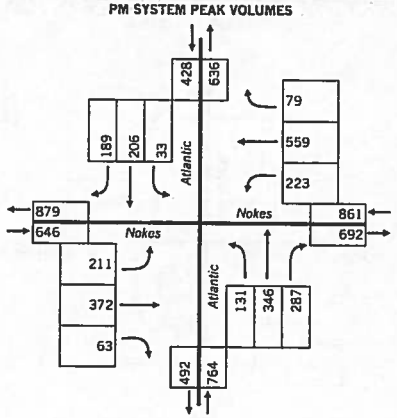

Gorove/Slade Associates

Project Name	Kincora
Project Number	2041-001
Project Location	Loudoun County
Data Source	Gorove/Slade Associates

Intersection: Route 7 and Countryside

AM PEAK

	Southbound Countryside				Westbound Route 7				Northbound Countryside				Eastbound Route 7			
Movement:	Right	Thru	Left	Peds	Right	Thru	Left	Peds	Right	Thru	Left	Peds	Right	Thru	Left	Peds
6:00 AM to 6:15 AM	11	4	21	1	7	203	3	0	20	4	3		8	501	17	
6:15 AM to 6:30 AM	23	6	29	0	14	212	8	0	25	3	1		4	604	22	
6:30 AM to 6:45 AM	34	3	19	0	12	234	4	0	28	6	5		9	682	27	
6:45 AM to 7:00 AM	36	9	34	0	8	230	16	0	25	9	5		9	605	26	
7:00 AM to 7:15 AM	19	4	22	0	10	244	10	0	42	2	3		14	709	49	
7:15 AM to 7:30 AM	38	8	35	0	17	264	15	0	33	17	11		9	684	74	
7:30 AM to 7:45 AM	53	22	64	0	26	278	16	0	49	28	9		5	741	58	
7:45 AM to 8:00 AM	86	44	41	0	37	391	25	0	38	25	25		9	655	91	
8:00 AM to 8:15 AM	55	21	48	0	24	316	25	0	34	11	8		13	734	48	
8:15 AM to 8:30 AM	46	10	49	0	23	326	9	0	32	17	17		13	709	66	
8:30 AM to 8:45 AM	53	19	27	0	24	286	17	0	36	17	13		18	703	82	
8:45 AM to 9:00 AM	59	21	41	0	37	342	29	0	30	14	13		16	650	92	

PM PEAK

	Southbound Countryside				Westbound Route 7				Northbound Countryside				Eastbound Route 7			
Movement:	Right	Thru	Left	Peds	Right	Thru	Left	Peds	Right	Thru	Left	Peds	Right	Thru	Left	Peds
4:00 PM to 4:15 PM	69	27	19	0	42	598	112	0	53	40	39		26	399	80	
4:15 PM to 4:30 PM	44	31	30	0	46	555	103	0	53	38	36		31	298	222	
4:30 PM to 4:45 PM	48	45	30	0	52	585	120	0	59	35	37		39	344	98	
4:45 PM to 5:00 PM	60	23	36	0	41	674	71	0	90	55	37		25	334	172	
5:00 PM to 5:15 PM	100	42	46	0	60	586	225	0	101	31	40		37	452	91	
5:15 PM to 5:30 PM	68	47	65	1	60	663	148	0	99	38	55		41	465	109	
5:30 PM to 5:45 PM	69	42	43	0	46	607	145	0	80	46	44		32	398	79	
5:45 PM to 6:00 PM	49	32	32	0	48	650	116	0	80	33	44		33	276	172	
6:00 PM to 6:15 PM	41	151	22	0	64	478	123	0	72	29	25		35	408	91	
6:15 PM to 6:30 PM	45	34	24	1	37	508	110	0	72	35	58		33	420	86	
6:30 PM to 6:45 PM	38	37	49	0	37	516	81	0	59	43	51		24	329	81	
6:45 PM to 7:00 PM	34	64	44	0	44	512	94	0	83	49	40		30	373	58	

PEAK HOURS

	Southbound Countryside				Westbound Route 7				Northbound Countryside				Eastbound Route 7			
Movement:	Right	Thru	Left	Peds	Right	Thru	Left	Peds	Right	Thru	Left	Peds	Right	Thru	Left	Peds
AM INTERSECTION PEAK HOUR																
7:30 AM to 8:30 AM	240	97	202	0	110	1311	75	0	153	81	59	0	40	2839	263	0
PM INTERSECTION PEAK HOUR																
4:45 PM to 5:45 PM	297	154	190	1	207	2530	589	0	370	170	176	0	135	1649	451	0
AM SYSTEM PEAK HOUR																
7:45 AM to 8:45 AM	240	94	165	0	108	1319	76	0	140	70	63	0	53	2801	287	0
PM SYSTEM PEAK HOUR																
5:00 PM to 6:00 PM	286	163	186	1	214	2506	634	0	360	148	183	0	143	1591	451	0

PEAK HOUR FACTORS

	Southbound Countryside				Westbound Route 7				Northbound Countryside				Eastbound Route 7			
	Right	Thru	Left	Peds	Right	Thru	Left	Peds	Right	Thru	Left	Peds	Right	Thru	Left	Peds
AM PEAK HOUR	0.70	0.53	0.84	N/A	0.73	0.84	0.76	N/A	0.92	0.70	0.63	N/A	0.74	0.95	0.79	N/A
PM PEAK HOUR	0.72	0.87	0.72	N/A	0.89	0.94	0.70	N/A	0.89	0.80	0.83	N/A	0.87	0.86	0.66	N/A

Overall AM PEAK HOUR FACTOR = 0.92

AM Period Intersection Volume: 14270

Overall PM PEAK HOUR FACTOR = 0.92

PM Period Intersection Volume: 18737

Date of Counts: Tuesday, June 10, 2008

AM Weather Conditions:

PM Weather Conditions:

AM INTERSECTION PEAK VOLUMES

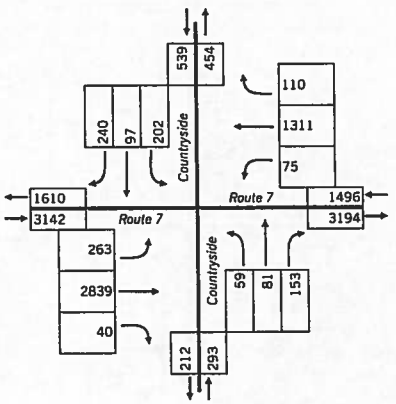

AM SYSTEM PEAK VOLUMES

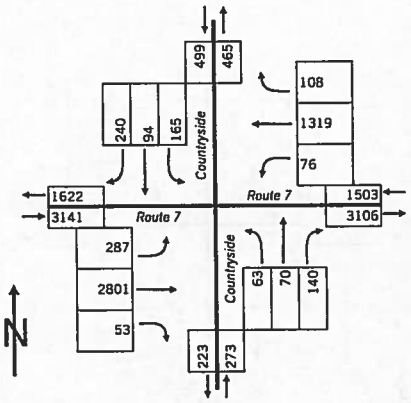

PM INTERSECTION PEAK VOLUMES

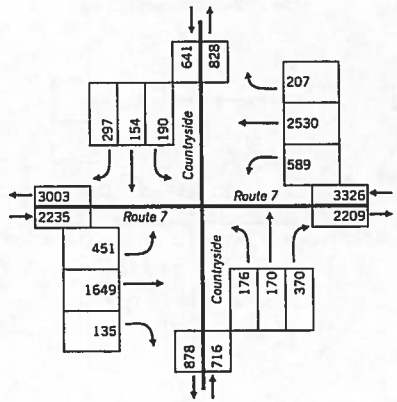

PM SYSTEM PEAK VOLUMES

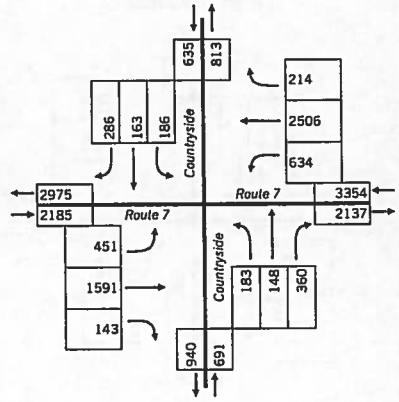

Gorove/Slade Associates

Project Name	Kincora
Project Number	2041-001
Project Location	Loudoun County
Data Source	Gorove/Slade Associates

Intersection: Dulles Center Blvd and Rt 28

Date of Counts: Tuesday, June 10, 2008

AM Weather Conditions:

PM Weather Conditions:

AM PEAK

	Direction:	Southbound				Westbound				Northbound				Eastbound			
	Roadway:	Dulles Ctr Blvd				Route 28				Dulles Ctr Blvd				Route 28			
	Movement:	Right	Thru	Left	Peds	Right	Thru	Left	Peds	Right	Thru	Left	Peds	Right	Thru	Left	Peds
6:00 AM	to 6:15 AM																
6:15 AM	to 6:30 AM	1				13											
6:30 AM	to 6:45 AM	2				8											
6:45 AM	to 7:00 AM	1				17											
7:00 AM	to 7:15 AM	5				16											
7:15 AM	to 7:30 AM	1				24											
7:30 AM	to 7:45 AM	10				25											
7:45 AM	to 8:00 AM	5				21											
8:00 AM	to 8:15 AM	5				30											
8:15 AM	to 8:30 AM	4				30											
8:30 AM	to 8:45 AM	6				27											
8:45 AM	to 9:00 AM	3				29											

PM PEAK

	Direction:	Southbound				Westbound				Northbound				Eastbound			
	Roadway:	Dulles Ctr Blvd				Route 28				Dulles Ctr Blvd				Route 28			
	Movement:	Right	Thru	Left	Peds	Right	Thru	Left	Peds	Right	Thru	Left	Peds	Right	Thru	Left	Peds
4:00 PM	to 4:15 PM	15				18											
4:15 PM	to 4:30 PM	36				55											
4:30 PM	to 4:45 PM	23				56											
4:45 PM	to 5:00 PM	22				76											
5:00 PM	to 5:15 PM	31				97											
5:15 PM	to 5:30 PM	20				82											
5:30 PM	to 5:45 PM	28				81											
5:45 PM	to 6:00 PM	39				68											
6:00 PM	to 6:15 PM	19				90											
6:15 PM	to 6:30 PM	28				69											
6:30 PM	to 6:45 PM	33				77											
6:45 PM	to 7:00 PM	24				98											

PEAK HOURS

	Direction:	Southbound				Westbound				Northbound				Eastbound			
	Roadway:	Dulles Ctr Blvd				Route 28				Dulles Ctr Blvd				Route 28			
	Movement:	Right	Thru	Left	Peds	Right	Thru	Left	Peds	Right	Thru	Left	Peds	Right	Thru	Left	Peds
AM INTERSECTION PEAK HOUR																	
8:00 AM	to 9:00 AM	18	0	0	0	116	0	0	0	0	0	0	0	0	0	0	0
PM INTERSECTION PEAK HOUR																	
5:00 PM	to 6:00 PM	118	0	0	0	328	0	0	0	0	0	0	0	0	0	0	0
AM SYSTEM PEAK HOUR																	
7:45 AM	to 8:45 AM	20	0	0	0	108	0	0	0	0	0	0	0	0	0	0	0
PM SYSTEM PEAK HOUR																	
5:00 PM	to 6:00 PM	118	0	0	0	328	0	0	0	0	0	0	0	0	0	0	0

PEAK HOUR FACTORS

	Southbound Dulles Ctr Blvd				Westbound Route 28				Northbound Dulles Ctr Blvd				Eastbound Route 28			
	Right	Thru	Left	Peds	Right	Thru	Left	Peds	Right	Thru	Left	Peds	Right	Thru	Left	Peds
AM PEAK HOUR	0.83	0.00	0.00	N/A	0.90	0.00	0.00	N/A	0.00	0.00	0.00	N/A	0.00	0.00	0.00	N/A
PM PEAK HOUR	0.76	0.00	0.00	N/A	0.85	0.00	0.00	N/A	0.00	0.00	0.00	N/A	0.00	0.00	0.00	N/A

Overall AM PEAK HOUR FACTOR = 0.91

Overall PM PEAK HOUR FACTOR = 0.87

AM Period Intersection Volume: 283

PM Period Intersection Volume: 1125

AM INTERSECTION PEAK VOLUMES

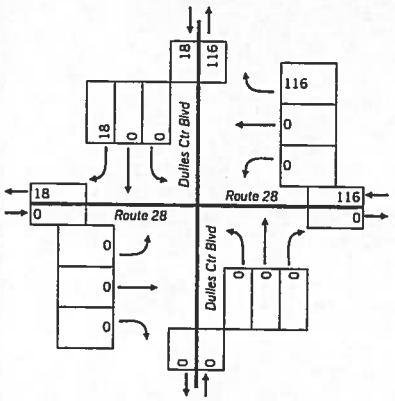

AM SYSTEM PEAK VOLUMES

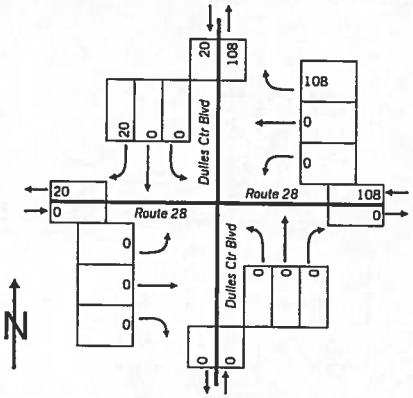

PM INTERSECTION PEAK VOLUMES

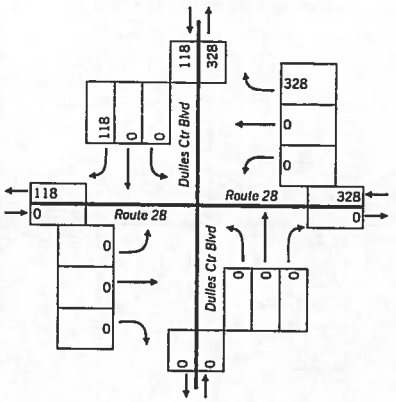

PM SYSTEM PEAK VOLUMES

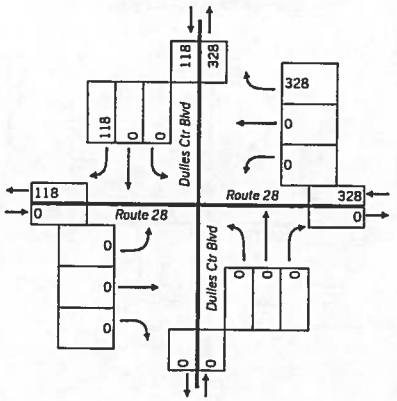

Gorove/Slade Associates

Project Name	Kincora
Project Number	2041-C01
Project Location	Loudoun County
Data Source	Gorove/Slade Associates

Intersection: Route 7 and Palisades Pky

AM PEAK

	Direction:	Southbound				Westbound				Northbound				Eastbound			
	Roadway:	Palisades				Route 7				Palisades				Route 7			
	Movement:	Right	Thru	Left	Peds	Right	Thru	Left	Peds	Right	Thru	Left	Peds	Right	Thru	Left	Peds
6:00 AM to 6:15 AM		12	1	9	0	3	170	2	0	7	0	2	0	8	515	1	
6:15 AM to 6:30 AM		16	6	20	0	1	198	6	0	2	0	5	0	31	536	7	
6:30 AM to 6:45 AM		27	3	20	0	4	184	9	0	4	1	8	0	27	627	9	
6:45 AM to 7:00 AM		32	16	28	0	7	190	9	0	5	3	6	0	35	581	21	
7:00 AM to 7:15 AM		34	7	21	0	8	210	9	0	7	3	5	0	40	698	21	
7:15 AM to 7:30 AM		44	11	24	0	14	226	14	0	5	2	10	0	35	572	29	
7:30 AM to 7:45 AM		51	16	23	0	6	266	5	0	3	3	7	0	75	697	29	
7:45 AM to 8:00 AM		59	19	32	0	13	289	43	0	7	6	20	0	89	595	39	
8:00 AM to 8:15 AM		59	21	35	0	15	265	30	0	10	13	14	0	102	622	30	
8:15 AM to 8:30 AM		50	29	39	0	22	271	27	0	10	8	8	0	104	519	48	
8:30 AM to 8:45 AM		40	13	25	0	23	297	23	0	15	7	16	0	86	616	45	
8:45 AM to 9:00 AM		63	23	38	2	25	242	48	0	3	8	20	0	91	528	72	

PM PEAK

	Direction:	Southbound				Westbound				Northbound				Eastbound			
	Roadway:	Palisades				Route 7				Palisades				Route 7			
	Movement:	Right	Thru	Left	Peds	Right	Thru	Left	Peds	Right	Thru	Left	Peds	Right	Thru	Left	Peds
4:00 PM to 4:15 PM		53	18	39	1	47	547	12	0	31	18	65	0	19	376	53	
4:15 PM to 4:30 PM		53	27	38	0	30	477	10	0	44	16	58	0	34	360	58	
4:30 PM to 4:45 PM		79	23	39	1	34	571	17	0	37	20	74	0	26	361	75	
4:45 PM to 5:00 PM		58	19	54	1	48	594	10	0	46	20	78	0	35	393	69	
5:00 PM to 5:15 PM		43	20	47	1	34	588	18	0	77	28	109	0	27	446	70	
5:15 PM to 5:30 PM		60	20	61	1	39	533	17	0	59	28	124	2	38	401	92	
5:30 PM to 5:45 PM		67	17	57	0	38	583	24	0	56	21	89	0	33	385	51	
5:45 PM to 6:00 PM		64	20	60	2	50	600	15	0	42	20	69	1	27	366	50	
6:00 PM to 6:15 PM		49	15	51	2	40	566	10	0	42	18	77	0	32	361	67	
6:15 PM to 6:30 PM		52	16	45	0	39	524	18	0	30	17	47	1	29	372	52	
6:30 PM to 6:45 PM		78	21	52	2	41	517	12	0	40	27	53	0	43	296	34	
6:45 PM to 7:00 PM		57	21	39	0	38	484	8	0	29	10	42	0	27	349	52	

PEAK HOURS

	Direction:	Southbound				Westbound				Northbound				Eastbound			
	Roadway:	Palisades				Route 7				Palisades				Route 7			
	Movement:	Right	Thru	Left	Peds	Right	Thru	Left	Peds	Right	Thru	Left	Peds	Right	Thru	Left	Peds
AM INTERSECTION PEAK HOUR																	
7:45 AM to 8:45 AM		208	82	131	0	73	1122	123	0	42	34	58	0	381	2352	162	0
PM INTERSECTION PEAK HOUR																	
4:45 PM to 5:45 PM		228	76	219	3	159	2298	69	0	238	97	400	0	133	1625	282	0
AM SYSTEM PEAK HOUR																	
7:45 AM to 8:45 AM		208	82	131	0	73	1122	123	0	42	34	58	0	381	2352	162	0
PM SYSTEM PEAK HOUR																	
5:00 PM to 6:00 PM		234	77	225	4	161	2304	74	0	234	97	391	3	125	1598	263	0

PEAK HOUR FACTORS	Southbound Palisades				Westbound Route 7				Northbound Palisades				Eastbound Route 7			
	Right	Thru	Left	Peds	Right	Thru	Left	Peds	Right	Thru	Left	Peds	Right	Thru	Left	Peds
AM PEAK HOUR	0.88	0.71	0.84	N/A	0.79	0.94	0.72	N/A	0.70	0.65	0.73	N/A	0.92	0.95	0.84	N/A
PM PEAK HOUR	0.87	0.96	0.92	N/A	0.81	0.96	0.77	N/A	0.76	0.87	0.79	N/A	0.82	0.90	0.71	N/A

Overall AM PEAK HOUR FACTOR = 0.98

Overall PM PEAK HOUR FACTOR = 0.96

AM Peak Hour Intersection Volume 4768

PM Peak Hour Intersection Total 0

Date of Counts: Tuesday, June 10, 2008

AM Weather Conditions:

PM Weather Conditions:

AM INTERSECTION PEAK VOLUMES

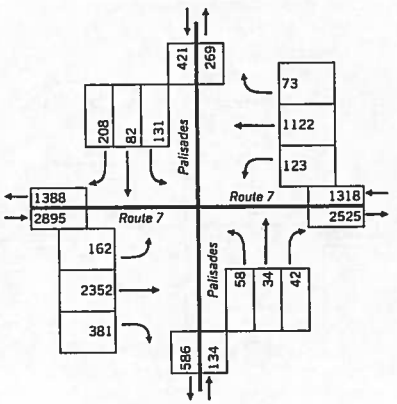

AM SYSTEM PEAK VOLUMES

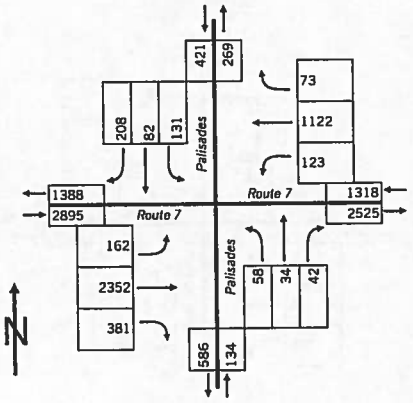

PM INTERSECTION PEAK VOLUMES

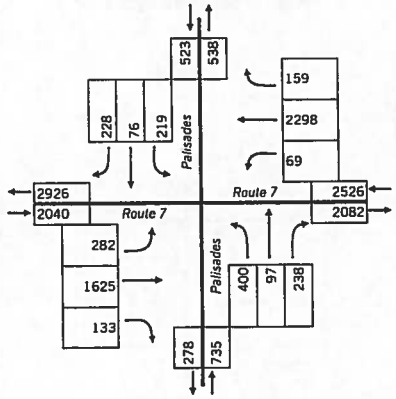

PM SYSTEM PEAK VOLUMES

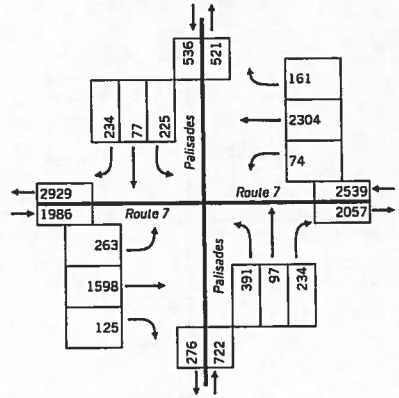

Grove/Slade Associates

Project Name	Kincora
Project Number	2041-001
Project Location	Loudoun County
Data Source	Grove/Slade Associates

Intersection: Atlantic Boulevard and Steeplechase

AM PEAK

	Direction:	Southbound				Westbound				Northbound				Eastbound			
	Roadway:	Atlantic				Steeplechase				Atlantic				Steeplechase			
	Movement:	Right	Thru	Left	Peds	Right	Thru	Left	Peds	Right	Thru	Left	Peds	Right	Thru	Left	Peds
6:00 AM	to 6:15 AM	4	3	0	1	0	0	0	0	1	13	7	0	10	7	1	0
6:15 AM	to 6:30 AM	2	8	4	0	0	1	0	0	0	6	14	0	10	5	8	0
6:30 AM	to 6:45 AM	3	9	3	0	0	0	0	0	0	4	15	0	6	10	5	0
6:45 AM	to 7:00 AM	5	9	1	0	0	0	0	0	0	20	16	0	18	16	18	0
7:00 AM	to 7:15 AM	7	9	4	0	0	2	0	0	1	11	13	0	19	12	15	0
7:15 AM	to 7:30 AM	11	10	2	0	0	2	0	0	1	13	13	0	13	10	16	0
7:30 AM	to 7:45 AM	12	20	6	0	0	0	0	0	0	20	18	0	11	11	15	0
7:45 AM	to 8:00 AM	17	20	3	0	1	2	0	0	1	25	16	0	6	13	22	0
8:00 AM	to 8:15 AM	12	30	3	0	0	1	0	0	1	17	25	0	5	19	19	0
8:15 AM	to 8:30 AM	8	14	0	0	0	0	0	0	1	30	14	0	7	19	7	0
8:30 AM	to 8:45 AM	10	24	3	1	0	3	0	0	1	16	20	0	7	16	10	0
8:45 AM	to 9:00 AM	13	11	2	0	1	2	0	0	2	10	10	0	5	10	17	0

PM PEAK

	Direction:	Southbound				Westbound				Northbound				Eastbound			
	Roadway:	Atlantic				Steeplechase				Atlantic				Steeplechase			
	Movement:	Right	Thru	Left	Peds	Right	Thru	Left	Peds	Right	Thru	Left	Peds	Right	Thru	Left	Peds
4:00 PM	to 4:15 PM	12	56	0	0	0	18	0	0	0	37	11	0	4	2	19	0
4:15 PM	to 4:30 PM	7	35	0	0	0	13	2	0	1	37	13	0	15	1	27	0
4:30 PM	to 4:45 PM	22	34	2	0	3	18	0	0	1	36	10	0	8	4	23	0
4:45 PM	to 5:00 PM	14	41	2	0	6	11	1	0	0	40	7	0	15	3	22	0
5:00 PM	to 5:15 PM	20	39	0	0	2	17	3	1	0	56	19	0	12	1	30	0
5:15 PM	to 5:30 PM	10	31	0	0	1	6	1	0	1	39	12	0	15	3	22	0
5:30 PM	to 5:45 PM	8	34	1	0	0	11	2	0	0	41	11	0	10	2	32	0
5:45 PM	to 6:00 PM	13	27	0	0	1	14	1	0	2	58	15	0	11	4	30	0
6:00 PM	to 6:15 PM	10	35	0	0	1	5	1	0	0	49	15	0	15	0	27	0
6:15 PM	to 6:30 PM	5	31	0	0	2	4	1	0	1	37	6	0	9	2	21	0
6:30 PM	to 6:45 PM	8	22	1	0	2	11	2	0	0	38	9	0	16	1	24	0
6:45 PM	to 7:00 PM	9	29	1	0	2	4	1	0	1	30	8	0	12	0	17	0

PEAK HOURS

	Direction:	Southbound				Westbound				Northbound				Eastbound			
	Roadway:	Atlantic				Steeplechase				Atlantic				Steeplechase			
	Movement:	Right	Thru	Left	Peds	Right	Thru	Left	Peds	Right	Thru	Left	Peds	Right	Thru	Left	Peds
AM INTERSECTION PEAK HOUR																	
7:30 AM	to 8:30 AM	49	84	12	0	1	3	0	0	3	92	73	0	29	62	63	0
PM INTERSECTION PEAK HOUR																	
4:15 PM	to 5:15 PM	63	149	4	0	11	59	6	1	2	169	49	0	50	9	102	0
AM SYSTEM PEAK HOUR																	
7:45 AM	to 8:45 AM	47	88	9	1	1	6	0	0	4	88	75	0	25	67	58	0
PM SYSTEM PEAK HOUR																	
5:00 PM	to 6:00 PM	51	131	1	0	4	48	7	1	3	194	57	0	48	10	114	0

PEAK HOUR FACTORS

	Southbound Atlantic				Westbound Steeplechase				Northbound Atlantic				Eastbound Steeplechase			
	Right	Thru	Left	Peds	Right	Thru	Left	Peds	Right	Thru	Left	Peds	Right	Thru	Left	Peds
AM PEAK HOUR	0.69	0.73	0.75	N/A	0.25	0.50	0.00	N/A	1.00	0.73	0.75	N/A	0.89	0.88	0.66	N/A
PM PEAK HOUR	0.64	0.84	0.25	N/A	0.50	0.71	0.58	N/A	0.38	0.84	0.75	N/A	0.80	0.63	0.89	N/A

Overall AM PEAK HOUR FACTOR = 0.89

Overall PM PEAK HOUR FACTOR = 0.84

AM Peak Hour Intersection Volume 463

PM Peak Hour Intersection Total 0

Date of Counts: Wednesday, June 04, 2008

AM Weather Conditions:

PM Weather Conditions:

AM INTERSECTION PEAK VOLUMES

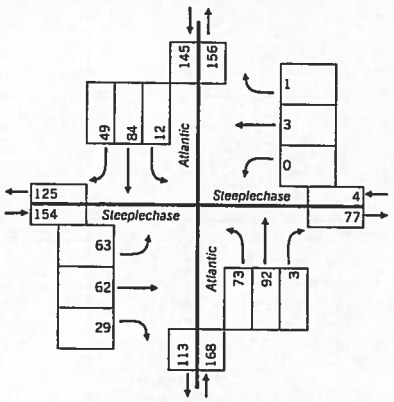

AM SYSTEM PEAK VOLUMES

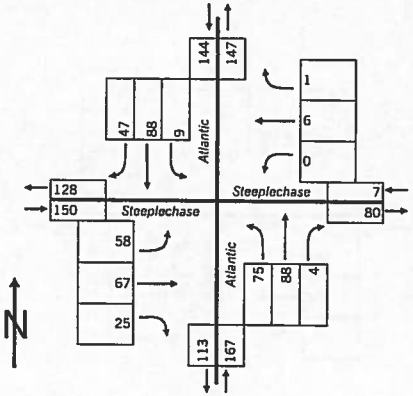

PM INTERSECTION PEAK VOLUMES

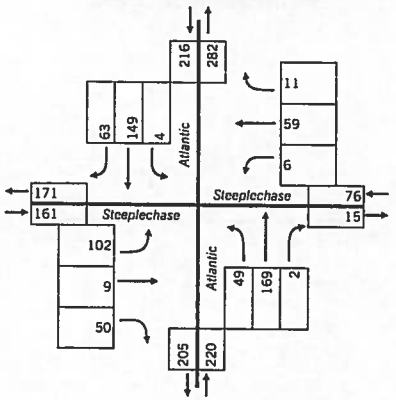

PM SYSTEM PEAK VOLUMES

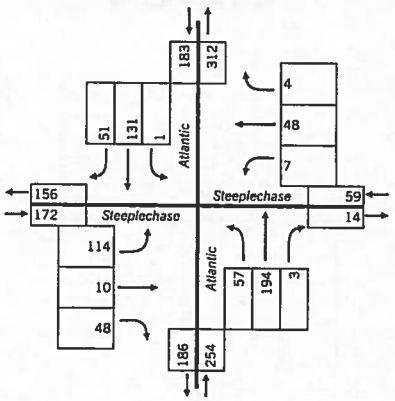

Gorove/Slade Associates

Project Name	Kincora
Project Number	2041-001
Project Location	Loudoun County
Data Source	Gorove/Slade Associates

Intersection: Route 7 and Loudoun County Parkway

AM PEAK			Southbound				Westbound				Northbound				Eastbound			
Direction:																		
Roadway:			Presidential Dr				Route 7				LCP				Route 7			
Movement:			Right	Thru	Left	Peds	Right	Thru	Left	Peds	Right	Thru	Left	Peds	Right	Thru	Left	Peds
6:00 AM	to	6:15 AM	8	14	2	0	4	153	35	0	11	5	15	0	58	758	11	0
6:15 AM	to	6:30 AM	3	0	0	0	6	207	44	0	22	4	6	0	59	908	6	0
6:30 AM	to	6:45 AM	4	0	2	0	7	248	32	0	30	5	9	0	46	792	24	1
6:45 AM	to	7:00 AM	12	3	5	0	3	295	17	0	22	6	21	0	48	948	26	1
7:00 AM	to	7:15 AM	16	6	6	0	2	309	29	0	35	3	13	0	50	979	35	1
7:15 AM	to	7:30 AM	25	13	5	0	2	371	18	0	55	12	11	0	40	865	12	0
7:30 AM	to	7:45 AM	34	6	0	0	2	472	20	0	58	7	14	0	47	900	19	1
7:45 AM	to	8:00 AM	26	9	4	0	1	499	31	0	64	15	17	0	39	984	49	0
8:00 AM	to	8:15 AM	28	16	4	0	3	453	26	0	65	34	23	0	147	697	29	4
8:15 AM	to	8:30 AM	27	13	8	0	4	511	16	0	54	19	21	0	28	788	29	0
8:30 AM	to	8:45 AM	27	9	3	0	3	468	20	0	70	15	18	0	40	890	35	0
8:45 AM	to	9:00 AM	27	14	7	0	1	449	24	0	63	22	24	0	69	744	46	1

PM PEAK			Southbound				Westbound				Northbound				Eastbound			
Direction:																		
Roadway:			Presidential Dr				Route 7				LCP				Route 7			
Movement:			Right	Thru	Left	Peds	Right	Thru	Left	Peds	Right	Thru	Left	Peds	Right	Thru	Left	Peds
4:00 PM	to	4:15 PM	26	8	5	0	2	877	28	0	49	11	65	0	12	449	91	2
4:15 PM	to	4:30 PM	20	8	3	0	1	980	57	0	42	15	60	0	21	692	44	0
4:30 PM	to	4:45 PM	42	9	11	0	2	961	29	0	92	9	100	0	33	587	35	1
4:45 PM	to	5:00 PM	49	20	17	0	0	973	40	0	71	13	103	0	23	683	33	1
5:00 PM	to	5:15 PM	53	18	8	0	1	1000	29	0	41	35	82	1	16	684	39	0
5:15 PM	to	5:30 PM	53	15	5	0	1	961	38	0	36	13	109	0	23	657	39	0
5:30 PM	to	5:45 PM	56	18	7	0	2	941	42	0	42	17	114	0	20	685	41	0
5:45 PM	to	6:00 PM	52	12	6	0	3	939	34	0	41	25	93	0	31	717	56	1
6:00 PM	to	6:15 PM	53	23	1	0	2	897	43	0	43	19	87	0	25	655	43	0
6:15 PM	to	6:30 PM	65	22	3	0	2	920	50	0	44	14	84	0	18	580	42	1
6:30 PM	to	6:45 PM	39	11	5	0	2	922	35	1	26	9	56	0	21	552	27	0
6:45 PM	to	7:00 PM	14	11	1	0	2	793	27	0	38	12	46	0	22	573	28	0

PEAK HOURS			Southbound				Westbound				Northbound				Eastbound			
Direction:																		
Roadway:			Presidential Dr				Route 7				LCP				Route 7			
Movement:			Right	Thru	Left	Peds	Right	Thru	Left	Peds	Right	Thru	Left	Peds	Right	Thru	Left	Peds
AM INTERSECTION PEAK HOUR																		
7:45 AM	to	8:45 AM	108	47	19	0	11	1931	93	0	253	83	79	0	254	3359	142	4
PM INTERSECTION PEAK HOUR																		
4:45 PM	to	5:45 PM	216	71	37	0	4	3875	149	0	190	78	408	0	82	2709	152	1
AM SYSTEM PEAK HOUR																		
7:45 AM	to	8:45 AM	108	47	19	0	11	1931	93	0	253	83	79	0	254	3359	142	4
PM SYSTEM PEAK HOUR																		
5:00 PM	to	6:00 PM	219	63	26	0	7	3841	143	0	160	90	398	1	90	2743	175	1

PEAK HOUR FACTORS	Southbound				Westbound				Northbound				Eastbound			
	Presidential Dr				Route 7				LCP				Route 7			
	Right	Thru	Left	Peds	Right	Thru	Left	Peds	Right	Thru	Left	Peds	Right	Thru	Left	Peds
AM PEAK HOUR	0.96	0.73	0.59	N/A	0.69	0.94	0.75	N/A	0.90	0.61	0.86	N/A	0.43	0.85	0.72	N/A
PM PEAK HOUR	0.94	0.88	0.81	N/A	0.58	0.96	0.85	N/A	0.95	0.64	0.87	N/A	0.73	0.96	0.78	N/A

Overall AM PEAK HOUR FACTOR = 0.92

Overall PM PEAK HOUR FACTOR = 0.99

AM Peak Hour Intersection Volume 6379

PM Peak Hour Intersection Total 0

Date of Counts: Tuesday, April 01, 2008

AM Weather Conditions:

PM Weather Conditions:

AM INTERSECTION PEAK VOLUMES

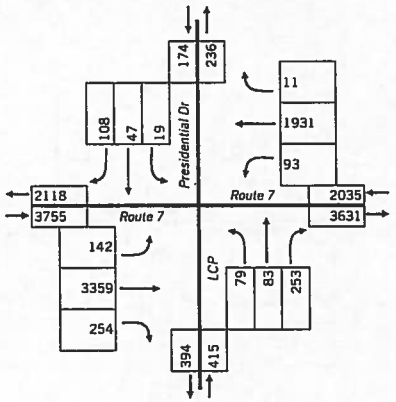

AM SYSTEM PEAK VOLUMES

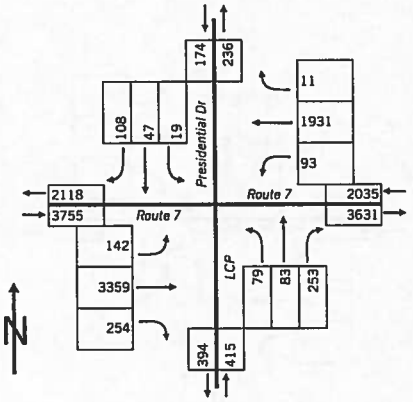

PM INTERSECTION PEAK VOLUMES

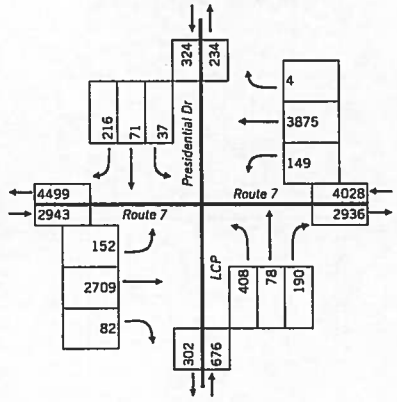

PM SYSTEM PEAK VOLUMES

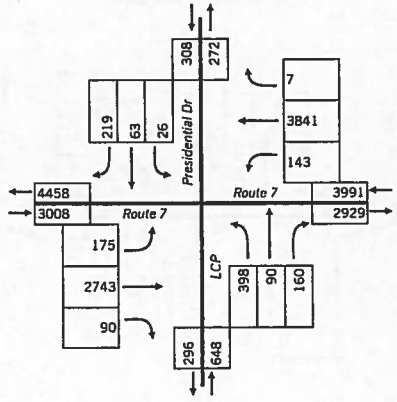

Gorove/Slade Associates

Project Name	Kincora
Project Number	2041-001
Project Location	Loudoun County
Data Source	Gorove/Slade Associates

Intersection: Route 7 and Richfield Way

AM PEAK

			Southbound Richfield				Westbound Route 7				Northbound Richfield				Eastbound Route 7			
Direction: / Roadway: / Movement:			Right	Thru	Left	Peds	Right	Thru	Left	Peds	Right	Thru	Left	Peds	Right	Thru	Left	Peds
6:00 AM	to	6:15 AM	0	0	48	0	33	226	3	0	0	0	0	0	4	749	7	0
6:15 AM	to	6:30 AM	1	0	37	0	24	242	1	0	0	1	1	0	5	951	3	0
6:30 AM	to	6:45 AM	4	0	84	0	43	301	33	0	0	0	2	0	12	928	11	0
6:45 AM	to	7:00 AM	4	2	71	0	44	343	8	0	1	0	0	0	19	998	7	0
7:00 AM	to	7:15 AM	4	2	91	0	34	335	21	0	1	0	0	0	23	1020	7	0
7:15 AM	to	7:30 AM	3	1	89	0	44	389	23	0	0	0	0	0	21	1062	4	0
7:30 AM	to	7:45 AM	2	1	99	0	30	498	12	0	3	0	0	0	12	1080	9	0
7:45 AM	to	8:00 AM	4	0	124	0	65	518	17	0	0	0	2	0	17	1029	9	0
8:00 AM	to	8:15 AM	1	0	121	0	65	514	7	0	2	1	1	0	4	1035	4	0
8:15 AM	to	8:30 AM	0	1	88	0	65	528	13	0	1	0	0	0	7	1124	10	0
8:30 AM	to	8:45 AM	4	2	109	0	54	525	12	0	1	0	1	0	8	1079	19	0
8:45 AM	to	9:00 AM	4	2	123	0	60	452	11	0	2	0	1	0	8	1020	21	0

PM PEAK

			Southbound Richfield				Westbound Route 7				Northbound Richfield				Eastbound Route 7			
Direction: / Roadway: / Movement:			Right	Thru	Left	Peds	Right	Thru	Left	Peds	Right	Thru	Left	Peds	Right	Thru	Left	Peds
4:00 PM	to	4:15 PM	9	0	64	0	59	926	6	0	9	0	8	0	3	573	13	1
4:15 PM	to	4:30 PM	9	0	63	0	82	1019	2	0	7	0	6	0	3	658	6	0
4:30 PM	to	4:45 PM	16	0	77	0	92	1010	1	1	28	1	10	0	2	659	10	0
4:45 PM	to	5:00 PM	16	0	77	0	107	1022	3	0	8	0	4	0	1	722	7	0
5:00 PM	to	5:15 PM	17	0	90	0	88	983	3	0	2	0	5	0	3	645	12	0
5:15 PM	to	5:30 PM	16	1	88	0	117	989	2	0	10	0	5	0	1	497	187	0
5:30 PM	to	5:45 PM	12	0	78	0	147	1010	3	0	3	0	3	0	1	715	19	0
5:45 PM	to	6:00 PM	10	0	61	0	145	1060	2	0	1	0	1	0	2	738	28	0
6:00 PM	to	6:15 PM	16	0	67	0	123	976	2	0	4	2	3	0	175	473	13	0
6:15 PM	to	6:30 PM	13	0	58	0	118	998	0	0	4	0	2	0	0	574	10	0
6:30 PM	to	6:45 PM	6	0	66	0	105	966	2	0	3	0	4	0	2	536	16	0
6:45 PM	to	7:00 PM	9	0	55	0	84	866	0	0	4	0	3	0	0	578	6	0

PEAK HOURS

			Southbound Richfield				Westbound Route 7				Northbound Richfield				Eastbound Route 7			
Direction: / Roadway: / Movement:			Right	Thru	Left	Peds	Right	Thru	Left	Peds	Right	Thru	Left	Peds	Right	Thru	Left	Peds
AM INTERSECTION PEAK HOUR																		
7:45 AM	to	8:45 AM	9	3	442	0	249	2085	49	0	4	1	4	0	36	4267	42	0
PM INTERSECTION PEAK HOUR																		
5:15 PM	to	6:15 PM	54	1	294	0	532	4035	9	0	18	2	12	0	179	2423	247	0
AM SYSTEM PEAK HOUR																		
7:45 AM	to	8:45 AM	9	3	442	0	249	2085	49	0	4	1	4	0	36	4267	42	0
PM SYSTEM PEAK HOUR																		
5:00 PM	to	6:00 PM	55	1	317	0	497	4042	10	0	16	0	14	0	7	2595	246	0

PEAK HOUR FACTORS

	Southbound Richfield				Westbound Route 7				Northbound Richfield				Eastbound Route 7			
	Right	Thru	Left	Peds	Right	Thru	Left	Peds	Right	Thru	Left	Peds	Right	Thru	Left	Peds
AM PEAK HOUR	0.56	0.38	0.89	N/A	0.96	0.99	0.72	N/A	0.50	0.25	0.50	N/A	0.53	0.95	0.55	N/A
PM PEAK HOUR	0.81	0.25	0.83	N/A	0.85	0.95	0.83	N/A	0.40	0.00	0.70	N/A	0.58	0.88	0.33	N/A

Overall AM PEAK HOUR FACTOR = 0.98

Overall PM PEAK HOUR FACTOR = 0.95

AM Peak Hour Intersection Volume 7191

PM Peak Hour Intersection Total 0

Date of Counts: Tuesday, April 01, 2008

AM Weather Conditions:

PM Weather Conditions:

AM INTERSECTION PEAK VOLUMES

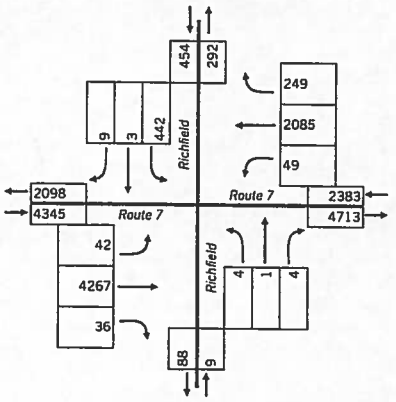

AM SYSTEM PEAK VOLUMES

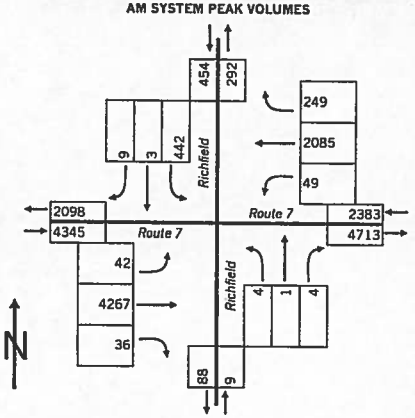

PM INTERSECTION PEAK VOLUMES

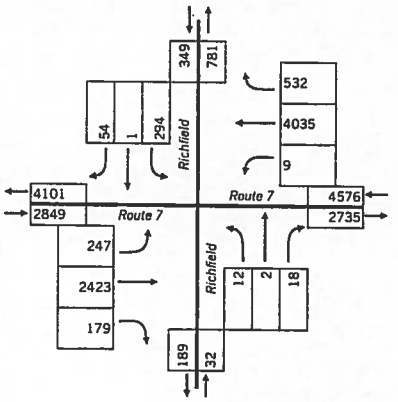

PM SYSTEM PEAK VOLUMES

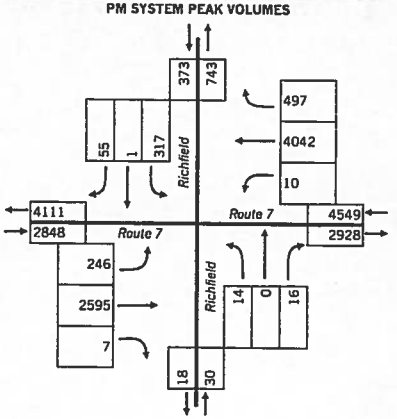

APPENDIX C

LEVEL OF SERVICE DEFINITIONS

LEVEL OF SERVICE DEFINITIONS

All capacity analyses are based on the procedures specified by the Transportation Research Board, Special Report 209: *Highway Capacity Manual (HCM),* 2000. Levels of service (LOS) range from A to F. A brief description of each level of service for signalized and unsignalized intersections is provided below.

Signalized Intersections: Level of service is based upon the traffic volume present in each lane on the roadway, the capacity of each lane at the intersection and the delay associated with each directional movement. The levels of service for signalized intersections are defined below:

- Level of Service A describes operations with very low average delay per vehicle, i.e., less than 10.0 seconds. This occurs when progression is extremely favorable, and most vehicles arrive during the green phase. Most vehicles do not stop. Short signal cycle lengths may also contribute to low delay.
- Level of Service B describes operations with average delay in the range of 10.1 to 20.0 seconds per vehicle. This generally occurs with good progression and/or short cycle lengths. More vehicles stop than for LOS A, causing higher levels of average delay.
- Level of Service C describes operations with delay in the range of 20.1 to 35.0 seconds per vehicle. These higher delays may result from fair progression and/or longer cycle lengths. Individual cycle failures may begin to appear at this level. The number of vehicles stopping is significant at this level although many still pass through the intersection without stopping. This is generally considered the lower end of the range of the acceptable level of service in rural areas.
- Level of Service D describes operations with delay in the range of 35.1 to 55.0 seconds per vehicle. At LOS D, the influence of congestion becomes more noticeable. Longer delays may result from some combination of unfavorable progression, long cycle lengths, and/or high traffic volumes as compared to the roadway capacity. Many vehicles are required to stop and the number of vehicles that do not have to stop declines. Individual signal cycle failures, where all waiting vehicles do not clear the intersection during a single green time, are noticeable. This is generally considered the lower end of the range of the acceptable level of service in urban areas.
- Level of Service E describes operations with delay in the range of 55.1 to 80.0 seconds per vehicle. These higher delay values generally indicate poor progression, long cycle lengths, and high traffic volumes. Individual cycle failures are frequent occurrences. LOS E has been set as the limit of acceptable conditions.
- Level of Service F describes operations with average delay in excess of 80.0 seconds per vehicle. This is considered to be unacceptable to most drivers. This condition often occurs

with over-saturation, i.e., when traffic arrives at a flow rate that exceeds the capacity of the intersection. It may also occur at high volumes with many individual cycle failures. Poor progression and long cycle lengths may also contribute to such delays.

Unsignalized Intersections: At an unsignalized intersection, the major street through traffic and right turns are assumed to operate unimpeded and therefore receive no level of service rating. The level of service for the minor street and the major street left turn traffic is dependent on the volume and capacity of the available lanes, and, the number and frequency of acceptable gaps in the major street traffic to make a conflicting turn. The level of service grade is provided for each conflicting movement at an unsignalized intersection and is based on the total average delay experienced by each vehicle. The delay includes the time it takes a vehicle to move from the back of a queue through the intersection.

The unsignalized intersection level of service analysis does not account for variations in driver behavior or the effects of nearby traffic signals. Therefore, the results from this analysis usually indicates worse levels of service than may be experienced in the field. The unsignalized intersection level of service descriptions are provided below:

- Level of Service A. Describes operations where there is very little to no conflicting traffic for a minor side street movement, i.e., an average total delay of less than 10.0 seconds per vehicle.
- Level of Service B. Describes operations with average total delay in the range of 10.1 to 15.0 seconds per vehicle.
- Level of Service C. Describes operations with average total delay in the range of 15.1 to 25.0 second per vehicle.
- Level of Service D. Describes operations with average total delay in the range of 25.1 to 35.0 seconds per vehicle.
- Level of Service E. Describes operations with average total delay in the range of 35.1 to 50.0 seconds per vehicle.
- Level of Service F. Describes operations with average total delay of 50 seconds per vehicle. LOS F exists when there are insufficient gaps of suitable size to allow a side street demand to cross safely through or enter a major street traffic stream. This level of service is generally evident from extremely long total delays experienced by side street traffic and by queuing on the minor approaches. It is important to note that LOS F may not always result in long queues but may result in adjustments to normal driver behavior.

APPENDIX D-1

INTERSECTION CAPACITY ANALYSIS RESULTS – EXISTING CONDITIONS (2008)

HCM Signalized Intersection Capacity Analysis
1: Route 7 & Janelia Farm Blvd.

Kincora
Existing Conditions (2008)

Movement	EBL	EBT	EBR	WBL	WBT	WBR	NBL	NBT	NBR	SBL	SBT	SBR
Lane Configurations												
Ideal Flow (vphpl)	1900	1900	1900	1900	1900	1900	1900	1900	1900	1900	1900	1900
Total Lost time (s)	3.0	3.0	3.0	3.0	3.0	3.0	3.0	3.0	3.0	3.0	3.0	3.0
Lane Util. Factor	0.97	0.91	1.00	0.97	0.91	1.00	0.95	0.95	1.00	0.97	1.00	1.00
Frt	1.00	1.00	0.85	1.00	1.00	0.85	1.00	1.00	0.85	1.00	1.00	0.85
Flt Protected	0.95	1.00	1.00	0.95	1.00	1.00	0.95	0.99	1.00	0.95	1.00	1.00
Satd. Flow (prot)	3433	4940	1583	3433	4940	1583	1681	1744	1583	3433	1863	1583
Flt Permitted	0.95	1.00	1.00	0.95	1.00	1.00	0.95	0.99	1.00	0.95	1.00	1.00
Satd. Flow (perm)	3433	4940	1583	3433	4940	1583	1681	1744	1583	3433	1863	1583
Volume (vph)	15	2504	116	181	1555	302	136	67	262	660	211	3
Peak-hour factor, PHF	0.75	0.95	0.81	0.79	0.93	0.81	0.81	0.70	0.86	0.83	0.89	0.38
Adj. Flow (vph)	20	2636	143	229	1672	373	168	96	305	795	237	8
RTOR Reduction (vph)	0	0	0	0	0	119	0	0	3	0	0	7
Lane Group Flow (vph)	20	2636	143	229	1672	254	129	135	302	795	237	1
Heavy Vehicles (%)	2%	5%	2%	2%	5%	2%	2%	2%	2%	2%	2%	2%
Turn Type	Prot		Free	Prot		Perm	Split		pm+ov	Split		pm+ov
Protected Phases	1	6		5	2		4	4	5	3	3	1
Permitted Phases			Free			2			4			3
Actuated Green, G (s)	3.0	126.0	200.0	9.0	132.0	132.0	25.0	25.0	34.0	12.0	12.0	15.0
Effective Green, g (s)	7.0	130.0	200.0	13.0	136.0	136.0	29.0	29.0	42.0	16.0	16.0	23.0
Actuated g/C Ratio	0.04	0.65	1.00	0.06	0.68	0.68	0.14	0.14	0.21	0.08	0.08	0.12
Clearance Time (s)	7.0	7.0		7.0	7.0	7.0	7.0	7.0	7.0	7.0	7.0	7.0
Vehicle Extension (s)	2.0	3.0		2.0	3.0	3.0	2.0	2.0	2.0	3.0	3.0	2.0
Lane Grp Cap (vph)	120	3211	1583	223	3359	1076	244	253	356	275	149	182
v/s Ratio Prot	0.01	c0.53		c0.07	0.34		0.08	0.08	c0.06	c0.23	0.13	0.00
v/s Ratio Perm			0.09			0.16			0.14			0.00
v/c Ratio	0.17	0.82	0.09	1.03	0.50	0.24	0.53	0.53	0.85	2.89	1.59	0.01
Uniform Delay, d1	93.7	26.3	0.0	93.5	15.5	12.2	79.2	79.2	75.9	92.0	92.0	78.4
Progression Factor	1.00	1.00	1.00	0.70	0.82	3.66	1.00	1.00	1.00	1.00	1.00	1.00
Incremental Delay, d2	0.2	2.5	0.1	61.1	0.4	0.4	1.0	1.1	16.2	860.8	295.1	0.0
Delay (s)	93.9	28.8	0.1	126.5	13.2	45.0	80.1	80.3	92.1	952.8	387.1	78.4
Level of Service	F	C	A	F	B	D	F	F	F	F	F	E
Approach Delay (s)		27.8			29.8			86.6			817.2	
Approach LOS		C			C			F			F	

Intersection Summary			
HCM Average Control Delay	156.3	HCM Level of Service	F
HCM Volume to Capacity ratio	1.01		
Actuated Cycle Length (s)	200.0	Sum of lost time (s)	9.0
Intersection Capacity Utilization	93.4%	ICU Level of Service	F
Analysis Period (min)	15		
c Critical Lane Group			

HCM Signalized Intersection Capacity Analysis
2: Route 7 & Smith Circle

Kincora
Existing Conditions (2008)

Movement	EBL	EBT	EBR	WBL	WBT	WBR	NBL	NBT	NBR	SBL	SBT	SBR
Lane Configurations												
Ideal Flow (vphpl)	1900	1900	1900	1900	1900	1900	1900	1900	1900	1900	1900	1900
Total Lost time (s)	3.0	3.0	3.0	3.0	3.0	3.0		3.0	3.0		3.0	
Lane Util. Factor	1.00	0.91	1.00	0.97	0.91	1.00		0.95	1.00		1.00	
Frt	1.00	1.00	0.85	1.00	1.00	0.85		1.00	0.85		0.98	
Flt Protected	0.95	1.00	1.00	0.95	1.00	1.00		1.00	1.00		0.97	
Satd. Flow (prot)	1770	4940	1583	3433	4940	1583		1770	1583		1762	
Flt Permitted	0.95	1.00	1.00	0.95	1.00	1.00		1.00	1.00		0.97	
Satd. Flow (perm)	1770	4940	1583	3433	4940	1583		1770	1583		1762	
Volume (vph)	41	3373	12	143	2033	2	0	161	932	13	7	5
Peak-hour factor, PHF	0.31	0.92	0.75	0.95	0.92	0.50	0.25	0.44	0.70	0.41	0.88	0.63
Adj. Flow (vph)	132	3666	16	151	2210	4	0	366	1331	32	8	8
RTOR Reduction (vph)	0	0	5	0	0	1	0	0	0	0	4	0
Lane Group Flow (vph)	132	3666	11	151	2210	3	0	366	1331	0	44	0
Heavy Vehicles (%)	2%	5%	2%	2%	5%	2%	2%	2%	2%	2%	2%	2%
Turn Type	Prot		Perm	Prot		Perm	Split		Free	Split		
Protected Phases	1	6		5	2		4	4		3	3	
Permitted Phases			6			2			Free			
Actuated Green, G (s)	10.0	139.1	139.1	10.0	139.1	139.1		14.4	200.0		8.0	
Effective Green, g (s)	14.0	143.6	143.6	14.0	143.6	143.6		18.4	200.0		12.0	
Actuated g/C Ratio	0.07	0.72	0.72	0.07	0.72	0.72		0.09	1.00		0.06	
Clearance Time (s)	7.0	7.5	7.5	7.0	7.5	7.5		7.0			7.0	
Vehicle Extension (s)	3.0	3.0	3.0	3.0	3.0	3.0		3.0			3.0	
Lane Grp Cap (vph)	124	3547	1137	240	3547	1137		163	1583		106	
v/s Ratio Prot	c0.07	c0.74		0.04	0.45			c0.21			0.03	
v/s Ratio Perm			0.01			0.00			c0.84			
v/c Ratio	1.06	1.03	0.01	0.63	0.62	0.00		2.25	0.84		0.42	
Uniform Delay, d1	93.0	28.2	8.0	90.5	14.4	8.0		90.8	0.0		90.6	
Progression Factor	1.12	1.15	0.68	0.99	1.16	0.73		1.00	1.00		1.00	
Incremental Delay, d2	43.4	16.4	0.0	4.1	0.7	0.0		579.7	5.6		2.6	
Delay (s)	147.4	48.7	5.4	93.6	17.3	5.8		670.5	5.6		93.3	
Level of Service	F	D	A	F	B	A		F	A		F	
Approach Delay (s)		52.0			22.2			149.0			93.3	
Approach LOS		D			C			F			F	

Intersection Summary			
HCM Average Control Delay	64.1	HCM Level of Service	E
HCM Volume to Capacity ratio	1.14		
Actuated Cycle Length (s)	200.0	Sum of lost time (s)	9.0
Intersection Capacity Utilization	84.4%	ICU Level of Service	E
Analysis Period (min)	15		
c Critical Lane Group			

Movement	EBL	EBT	EBR	WBL	WBT	WBR	NBL	NBT	NBR	SBL	SBT	SBR
Lane Configurations												
Ideal Flow (vphpl)	1900	1900	1900	1900	1900	1900	1900	1900	1900	1900	1900	1900
Total Lost time (s)	3.0	3.0	3.0	3.0	3.0	3.0	3.0	3.0	3.0	3.0	3.0	3.0
Lane Util. Factor	1.00	0.91	1.00	0.97	0.91	1.00	1.00	1.00	1.00	0.97	1.00	1.00
Frt	1.00	1.00	0.85	1.00	1.00	0.85	1.00	1.00	0.85	1.00	1.00	0.85
Flt Protected	0.95	1.00	1.00	0.95	1.00	1.00	0.95	1.00	1.00	0.95	1.00	1.00
Satd. Flow (prot)	1770	4940	1583	3433	4940	1583	1770	1863	1583	3433	1863	1583
Flt Permitted	0.95	1.00	1.00	0.95	1.00	1.00	0.95	1.00	1.00	0.95	1.00	1.00
Satd. Flow (perm)	1770	4940	1583	3433	4940	1583	1770	1863	1583	3433	1863	1583
Volume (vph)	163	3863	292	96	1991	11	79	83	253	19	47	108
Peak-hour factor, PHF	0.72	0.85	0.43	0.75	0.94	0.69	0.86	0.61	0.90	0.59	0.73	0.96
Adj. Flow (vph)	226	4545	679	128	2118	16	92	136	281	32	64	112
RTOR Reduction (vph)	0	0	0	0	0	5	0	0	0	0	0	90
Lane Group Flow (vph)	226	4545	679	128	2118	11	92	136	281	32	64	22
Heavy Vehicles (%)	2%	5%	2%	2%	5%	2%	2%	2%	2%	2%	2%	2%
Turn Type	Prot		Free	Prot		Perm	Prot		Free	Prot		Perm
Protected Phases	1	6		5	2		3	8		7	4	
Permitted Phases			Free			2			Free			4
Actuated Green, G (s)	17.0	139.1	200.0	10.0	132.1	132.1	10.0	13.4	200.0	8.0	11.4	11.4
Effective Green, g (s)	21.0	143.6	200.0	14.0	136.6	136.6	14.0	18.4	200.0	12.0	16.4	16.4
Actuated g/C Ratio	0.10	0.72	1.00	0.07	0.68	0.68	0.07	0.09	1.00	0.06	0.08	0.08
Clearance Time (s)	7.0	7.5		7.0	7.5	7.5	7.0	8.0		7.0	8.0	8.0
Vehicle Extension (s)	2.0	3.0		2.0	3.0	3.0	2.0	2.0		2.0	2.0	2.0
Lane Grp Cap (vph)	186	3547	1583	240	3374	1081	124	171	1583	206	153	130
v/s Ratio Prot	c0.13	c0.92		0.04	0.43		c0.05	c0.07		0.01	0.03	
v/s Ratio Perm			c0.43			0.01			0.18			0.01
v/c Ratio	1.22	1.28	0.43	0.53	0.63	0.01	0.74	0.80	0.18	0.16	0.42	0.17
Uniform Delay, d1	89.5	28.2	0.0	89.8	17.6	10.1	91.2	89.0	0.0	89.2	87.3	85.5
Progression Factor	1.20	0.37	1.00	0.79	1.02	1.49	0.82	0.88	1.00	1.00	1.00	1.00
Incremental Delay, d2	116.0	127.6	0.4	0.9	0.7	0.0	18.1	20.0	0.2	0.1	0.7	0.2
Delay (s)	223.5	138.0	0.4	71.6	18.6	15.1	92.5	98.6	0.2	89.3	87.9	85.7
Level of Service	F	F	A	E	B	B	F	F	A	F	F	F
Approach Delay (s)		124.4			21.6			43.2			86.9	
Approach LOS		F			C			D			F	

Intersection Summary			
HCM Average Control Delay	91.0	HCM Level of Service	F
HCM Volume to Capacity ratio	1.18		
Actuated Cycle Length (s)	200.0	Sum of lost time (s)	6.0
Intersection Capacity Utilization	104.0%	ICU Level of Service	G
Analysis Period (min)	15		

c Critical Lane Group

Movement	EBL	EBT	EBR	WBL	WBT	WBR	NBL	NBT	NBR	SBL	SBT	SBR
Lane Configurations												
Ideal Flow (vphpl)	1900	1900	1900	1900	1900	1900	1900	1900	1900	1900	1900	1900
Total Lost time (s)	3.0	3.0	3.0	3.0	3.0	3.0	3.0	3.0		3.0	3.0	
Lane Util. Factor	1.00	0.91	1.00	1.00	0.91	1.00	1.00	1.00		0.95	0.95	
Frt	1.00	1.00	0.85	1.00	1.00	0.85	1.00	0.90		1.00	0.99	
Flt Protected	0.95	1.00	1.00	0.95	1.00	1.00	0.95	1.00		0.95	0.96	
Satd. Flow (prot)	1770	4940	1583	1770	4940	1583	1770	1676		1681	1677	
Flt Permitted	0.95	1.00	1.00	0.95	1.00	1.00	0.95	1.00		0.95	0.96	
Satd. Flow (perm)	1770	4940	1583	1770	4940	1583	1770	1676		1681	1677	
Volume (vph)	40	4061	34	49	2085	249	4	1	4	442	3	9
Peak-hour factor, PHF	0.55	0.95	0.53	0.72	0.99	0.96	0.50	0.25	0.50	0.89	0.38	0.56
Adj. Flow (vph)	73	4275	64	68	2106	259	8	4	8	497	8	16
RTOR Reduction (vph)	0	0	15	0	0	93	0	8	0	0	1	0
Lane Group Flow (vph)	73	4275	49	68	2106	166	8	4	0	267	253	0
Heavy Vehicles (%)	2%	5%	2%	2%	5%	2%	2%	2%	2%	2%	2%	2%
Turn Type	Prot		Perm	Prot		Perm	Split			Split		
Protected Phases	1	6		5	2		3	3		4	4	
Permitted Phases			6			2						
Actuated Green, G (s)	10.0	120.8	120.8	12.4	123.2	123.2	6.0	6.0		31.8	31.8	
Effective Green, g (s)	14.0	125.8	125.8	16.4	128.2	128.2	10.0	10.0		35.8	35.8	
Actuated g/C Ratio	0.07	0.63	0.63	0.08	0.64	0.64	0.05	0.05		0.18	0.18	
Clearance Time (s)	7.0	8.0	8.0	7.0	8.0	8.0	7.0	7.0		7.0	7.0	
Vehicle Extension (s)	3.0	3.0	3.0	3.0	3.0	3.0	3.0	3.0		3.0	3.0	
Lane Grp Cap (vph)	124	3107	996	145	3167	1015	89	84		301	300	
v/s Ratio Prot	c0.04	c0.87		0.04	0.43		c0.00	0.00		c0.16	0.15	
v/s Ratio Perm			0.03			0.10						
v/c Ratio	0.59	1.38	0.05	0.47	0.66	0.16	0.09	0.05		0.89	0.84	
Uniform Delay, d1	90.2	37.1	14.2	87.6	22.5	14.4	90.7	90.5		80.1	79.4	
Progression Factor	1.24	0.26	0.10	1.00	1.00	1.00	1.00	1.00		1.00	1.00	
Incremental Delay, d2	0.6	169.4	0.0	2.4	1.1	0.3	0.4	0.3		25.3	19.0	
Delay (s)	112.5	179.0	1.4	90.0	23.6	14.7	91.1	90.7		105.5	98.4	
Level of Service	F	F	A	F	C	B	F	F		F	F	
Approach Delay (s)		175.3			24.5			90.9			102.0	
Approach LOS		F			C			F			F	

Intersection Summary			
HCM Average Control Delay	120.3	HCM Level of Service	F
HCM Volume to Capacity ratio	1.14		
Actuated Cycle Length (s)	200.0	Sum of lost time (s)	12.0
Intersection Capacity Utilization	104.4%	ICU Level of Service	G
Analysis Period (min)	15		

c Critical Lane Group

Movement	EBL	EBT	EBR	WBL	WBT	WBR	NBL	NBT	NBR	SBL	SBT	SBR
Lane Configurations												
Ideal Flow (vphpl)	1900	1900	1900	1900	1900	1900	1900	1900	1900	1900	1900	1900
Total Lost time (s)	3.0	3.0	3.0	3.0	3.0	3.0	3.0	3.0	3.0	3.0	3.0	3.0
Lane Util. Factor	0.97	0.91	1.00	0.97	0.91	1.00	0.97	0.95	1.00	0.97	0.95	1.00
Frt	1.00	1.00	0.85	1.00	1.00	0.85	1.00	1.00	0.85	1.00	1.00	0.85
Flt Protected	0.95	1.00	1.00	0.95	1.00	1.00	0.95	1.00	1.00	0.95	1.00	1.00
Satd. Flow (prot)	3433	5085	1583	3433	5085	1583	3433	3539	1583	3433	3539	1583
Flt Permitted	0.95	1.00	1.00	0.95	1.00	1.00	0.95	1.00	1.00	0.95	1.00	1.00
Satd. Flow (perm)	3433	5085	1583	3433	5085	1583	3433	3539	1583	3433	3539	1583
Volume (vph)	287	2801	53	70	1218	100	63	70	140	165	94	240
Peak-hour factor, PHF	0.79	0.95	0.74	0.76	0.84	0.73	0.63	0.70	0.92	0.84	0.53	0.70
Adj. Flow (vph)	363	2948	72	92	1450	137	100	100	152	196	177	343
RTOR Reduction (vph)	0	0	0	0	0	48	0	0	0	0	0	22
Lane Group Flow (vph)	363	2948	72	92	1450	89	100	100	152	196	177	321
Turn Type	Prot		Free	Prot		pm+ov	Prot		Free	Prot		pm+ov
Protected Phases	1	6		5	2	3	7	4		3	8	1
Permitted Phases			Free			2			Free			8
Actuated Green, G (s)	21.7	106.6	180.0	10.2	95.1	109.5	9.0	20.8	180.0	14.4	26.2	47.9
Effective Green, g (s)	25.7	110.6	180.0	14.2	99.1	117.5	13.0	24.8	180.0	18.4	30.2	55.9
Actuated g/C Ratio	0.14	0.61	1.00	0.08	0.55	0.65	0.07	0.14	1.00	0.10	0.17	0.31
Clearance Time (s)	7.0	7.0		7.0	7.0	7.0	7.0	7.0		7.0	7.0	7.0
Vehicle Extension (s)	2.0	2.0		3.0	2.0	2.0	2.0	2.0		2.0	2.0	2.0
Lane Grp Cap (vph)	490	3124	1583	271	2800	1060	248	488	1583	351	594	518
v/s Ratio Prot	c0.11	c0.58		0.03	0.29	0.01	0.03	0.03		c0.06	0.05	c0.09
v/s Ratio Perm			0.05			0.05			0.10			0.11
v/c Ratio	0.74	0.94	0.05	0.34	0.52	0.08	0.40	0.20	0.10	0.56	0.30	0.62
Uniform Delay, d1	74.0	31.8	0.0	78.5	25.4	11.5	79.8	68.9	0.0	76.9	65.6	53.0
Progression Factor	1.00	1.00	1.00	0.93	0.80	0.46	1.00	1.00	1.00	1.00	1.00	1.00
Incremental Delay, d2	5.2	7.5	0.1	0.7	0.7	0.0	0.4	0.1	0.1	1.1	0.1	1.6
Delay (s)	79.2	39.3	0.1	73.4	21.0	5.3	80.2	68.9	0.1	78.0	65.7	54.5
Level of Service	E	D	A	E	C	A	F	E	A	E	E	D
Approach Delay (s)		42.7			22.6			42.4			63.7	
Approach LOS		D			C			D			E	

Intersection Summary			
HCM Average Control Delay	39.6	HCM Level of Service	D
HCM Volume to Capacity ratio	0.83		
Actuated Cycle Length (s)	180.0	Sum of lost time (s)	9.0
Intersection Capacity Utilization	80.5%	ICU Level of Service	D
Analysis Period (min)	15		

c Critical Lane Group

Movement	EBL	EBT	EBR	WBL	WBT	WBR	NBL	NBT	NBR	SBL	SBT	SBR
Lane Configurations												
Ideal Flow (vphpl)	1900	1900	1900	1900	1900	1900	1900	1900	1900	1900	1900	1900
Total Lost time (s)	3.0	3.0	3.0	3.0	3.0	3.0	3.0	3.0	3.0	3.0	3.0	3.0
Lane Util. Factor	0.97	0.91	1.00	1.00	0.91	1.00	0.97	1.00	1.00	0.97	1.00	1.00
Frt	1.00	1.00	0.85	1.00	1.00	0.85	1.00	1.00	0.85	1.00	1.00	0.85
Flt Protected	0.95	1.00	1.00	0.95	1.00	1.00	0.95	1.00	1.00	0.95	1.00	1.00
Satd. Flow (prot)	3433	5085	1583	1770	5085	1583	3433	1863	1583	3433	1863	1583
Flt Permitted	0.95	1.00	1.00	0.95	1.00	1.00	0.95	1.00	1.00	0.95	1.00	1.00
Satd. Flow (perm)	3433	5085	1583	1770	5085	1583	3433	1863	1583	3433	1863	1583
Volume (vph)	174	2523	409	123	1122	73	58	34	42	131	82	208
Peak-hour factor, PHF	0.84	0.95	0.92	0.72	0.94	0.79	0.73	0.65	0.70	0.84	0.71	0.88
Adj. Flow (vph)	207	2656	445	171	1194	92	79	52	60	156	115	236
RTOR Reduction (vph)	0	0	0	0	0	0	0	0	55	0	0	209
Lane Group Flow (vph)	207	2656	445	171	1194	92	79	52	5	156	115	27
Turn Type	Prot		Free	Prot		Free	Split		Perm	Split		Perm
Protected Phases	1	6		5	2		4	4		3	3	
Permitted Phases			Free			Free			4			3
Actuated Green, G (s)	15.4	103.5	180.0	21.6	109.7	180.0	10.5	10.5	10.5	16.4	16.4	16.4
Effective Green, g (s)	19.4	107.5	180.0	25.6	113.7	180.0	14.5	14.5	14.5	20.4	20.4	20.4
Actuated g/C Ratio	0.11	0.60	1.00	0.14	0.63	1.00	0.08	0.08	0.08	0.11	0.11	0.11
Clearance Time (s)	7.0	7.0		7.0	7.0		7.0	7.0	7.0	7.0	7.0	7.0
Vehicle Extension (s)	2.0	4.0		2.0	4.0		3.0	3.0	3.0	3.0	3.0	3.0
Lane Grp Cap (vph)	370	3037	1583	252	3212	1583	277	150	128	389	211	179
v/s Ratio Prot	0.06	c0.52		c0.10	0.23		0.02	c0.03		0.05	c0.06	
v/s Ratio Perm			0.28			0.06			0.00			0.02
v/c Ratio	0.56	0.87	0.28	0.68	0.37	0.06	0.29	0.35	0.04	0.40	0.55	0.15
Uniform Delay, d1	76.2	30.6	0.0	73.3	16.0	0.0	77.9	78.3	76.3	74.1	75.4	72.0
Progression Factor	1.31	0.32	1.00	1.00	1.00	1.00	1.00	1.00	1.00	1.00	1.00	1.00
Incremental Delay, d2	0.5	1.8	0.2	5.6	0.3	0.1	0.6	1.4	0.1	0.7	2.9	0.4
Delay (s)	100.5	11.6	0.2	78.9	16.3	0.1	78.4	79.7	76.4	74.8	78.3	72.4
Level of Service	F	B	A	E	B	A	E	E	E	E	E	E
Approach Delay (s)		15.6			22.6			78.1			74.5	
Approach LOS		B			C			E			E	

Intersection Summary			
HCM Average Control Delay	25.1	HCM Level of Service	C
HCM Volume to Capacity ratio	0.76		
Actuated Cycle Length (s)	180.0	Sum of lost time (s)	12.0
Intersection Capacity Utilization	76.0%	ICU Level of Service	D
Analysis Period (min)	15		

c Critical Lane Group

Movement	WBL	WBR	NBT	NBR	SBL	SBT
Lane Configurations						
Ideal Flow (vphpl)	1900	1900	1900	1900	1900	1900
Total Lost time (s)	3.0	3.0	3.0		3.0	3.0
Lane Util. Factor	1.00	1.00	0.95		1.00	0.95
Frt	1.00	0.85	0.97		1.00	1.00
Flt Protected	0.95	1.00	1.00		0.95	1.00
Satd. Flow (prot)	1770	1583	3420		1770	3539
Flt Permitted	0.95	1.00	1.00		0.40	1.00
Satd. Flow (perm)	1770	1583	3420		736	3539
Volume (vph)	89	191	300	70	159	544
Peak-hour factor, PHF	0.59	0.76	0.87	0.70	0.80	0.90
Adj. Flow (vph)	151	251	345	100	199	604
RTOR Reduction (vph)	0	141	24	0	0	0
Lane Group Flow (vph)	151	110	421	0	199	604
Turn Type		pm+ov			pm+pt	
Protected Phases	4	1	2		1	6
Permitted Phases		4			6	
Actuated Green, G (s)	7.6	15.5	16.7		31.6	31.6
Effective Green, g (s)	11.6	23.5	21.2		36.1	36.1
Actuated g/C Ratio	0.22	0.44	0.39		0.67	0.67
Clearance Time (s)	7.0	7.0	7.5		7.0	7.5
Vehicle Extension (s)	2.0	2.0	2.0		2.0	2.0
Lane Grp Cap (vph)	382	781	1350		724	2379
v/s Ratio Prot	c0.09	0.03	c0.12		c0.06	0.17
v/s Ratio Perm		0.04			0.12	
v/c Ratio	0.40	0.14	0.31		0.27	0.25
Uniform Delay, d1	18.0	9.0	11.2		3.5	3.5
Progression Factor	1.00	1.00	1.00		1.00	1.00
Incremental Delay, d2	0.2	0.0	0.0		0.1	0.0
Delay (s)	18.3	9.1	11.3		3.6	3.5
Level of Service	B	A	B		A	A
Approach Delay (s)	12.5		11.3			3.5
Approach LOS	B		B			A

Intersection Summary			
HCM Average Control Delay	7.8	HCM Level of Service	A
HCM Volume to Capacity ratio	0.32		
Actuated Cycle Length (s)	53.7	Sum of lost time (s)	9.0
Intersection Capacity Utilization	37.1%	ICU Level of Service	A
Analysis Period (min)	15		
c Critical Lane Group			

Movement	EBL	EBT	EBR	WBL	WBT	WBR	NBL	NBT	NBR	SBL	SBT	SBR
Lane Configurations												
Sign Control		Stop			Stop			Free			Free	
Grade		0%			0%			0%			0%	
Volume (veh/h)	41	2	145	71	9	38	35	267	15	9	678	39
Peak Hour Factor	0.85	0.50	0.88	0.93	0.45	0.86	0.73	0.79	0.54	0.75	0.94	0.54
Hourly flow rate (vph)	48	4	165	76	20	44	48	338	28	12	721	72
Pedestrians												
Lane Width (ft)												
Walking Speed (ft/s)												
Percent Blockage												
Right turn flare (veh)												
Median type		None			None							
Median storage veh)												
Upstream signal (ft)											1257	
pX, platoon unblocked												
vC, conflicting volume	1064	1207	361	985	1251	169	793			366		
vC1, stage 1 conf vol												
vC2, stage 2 conf vol												
vCu, unblocked vol	1064	1207	361	985	1251	169	793			366		
tC, single (s)	7.5	6.5	6.9	7.5	6.5	6.9	4.1			4.1		
tC, 2 stage (s)												
tF (s)	3.5	4.0	3.3	3.5	4.0	3.3	2.2			2.2		
p0 queue free %	67	98	74	45	87	95	94			99		
cM capacity (veh/h)	144	170	636	140	160	845	823			1189		

Direction, Lane #	EB 1	EB 2	WB 1	WB 2	NB 1	NB 2	NB 3	NB 4	SB 1	SB 2	SB 3	SB 4
Volume Total	52	165	96	44	48	169	169	28	12	361	361	72
Volume Left	48	0	76	0	48	0	0	0	12	0	0	0
Volume Right	0	165	0	44	0	0	0	28	0	0	0	72
cSH	146	636	143	845	823	1700	1700	1700	1189	1700	1700	1700
Volume to Capacity	0.36	0.26	0.67	0.05	0.06	0.10	0.10	0.02	0.01	0.21	0.21	0.04
Queue Length 95th (ft)	37	26	94	4	5	0	0	0	1	0	0	0
Control Delay (s)	42.9	12.6	70.5	9.5	9.6	0.0	0.0	0.0	8.1	0.0	0.0	0.0
Lane LOS	E	B	F	A	A				A			
Approach Delay (s)	19.9		51.3		1.1				0.1			
Approach LOS	C		F									

Intersection Summary			
Average Delay	7.7		
Intersection Capacity Utilization	43.1%	ICU Level of Service	A
Analysis Period (min)	15		

Intersection Sign configuration not allowed in HCM analysis.

Movement	EBL	EBT	EBR	WBL	WBT	WBR	NBL	NBT	NBR	SBL	SBT	SBR
Lane Configurations												
Ideal Flow (vphpl)	1900	1900	1900	1900	1900	1900	1900	1900	1900	1900	1900	1900
Total Lost time (s)	3.0	3.0	3.0	3.0	3.0	3.0	3.0	3.0	3.0	3.0	3.0	3.0
Lane Util. Factor	1.00	0.95	1.00	0.97	0.95	1.00	1.00	0.95	1.00	0.97	0.95	1.00
Frt	1.00	1.00	0.85	1.00	1.00	0.85	1.00	1.00	0.85	1.00	1.00	0.85
Flt Protected	0.95	1.00	1.00	0.95	1.00	1.00	0.95	1.00	1.00	0.95	1.00	1.00
Satd. Flow (prot)	1770	3539	1583	3433	3539	1583	1770	3539	1583	3433	3539	1583
Flt Permitted	0.95	1.00	1.00	0.95	1.00	1.00	0.95	1.00	1.00	0.95	1.00	1.00
Satd. Flow (perm)	1770	3539	1583	3433	3539	1583	1770	3539	1583	3433	3539	1583
Volume (vph)	49	350	209	211	136	137	124	344	226	190	336	19
Peak-hour factor, PHF	0.72	0.76	0.80	0.65	0.79	0.78	0.89	0.97	0.67	0.73	0.88	0.48
Adj. Flow (vph)	68	461	261	325	172	180	139	355	337	260	382	40
RTOR Reduction (vph)	0	0	0	0	0	0	0	0	0	0	0	0
Lane Group Flow (vph)	68	461	261	325	172	180	139	355	337	260	382	40
Turn Type	Prot		Free	Prot		Free	Prot		Free	Prot		Free
Protected Phases	7	4		3	8		5	2		1	6	
Permitted Phases			Free			Free			Free			Free
Actuated Green, G (s)	7.8	20.1	96.7	14.1	26.4	96.7	12.9	22.0	96.7	12.5	21.6	96.7
Effective Green, g (s)	11.8	24.1	96.7	18.1	30.4	96.7	16.9	26.0	96.7	16.5	25.6	96.7
Actuated g/C Ratio	0.12	0.25	1.00	0.19	0.31	1.00	0.17	0.27	1.00	0.17	0.26	1.00
Clearance Time (s)	7.0	7.0		7.0	7.0		7.0	7.0		7.0	7.0	
Vehicle Extension (s)	3.0	3.0		3.0	3.0		3.0	5.0		3.0	5.0	
Lane Grp Cap (vph)	216	882	1583	643	1113	1583	309	952	1583	586	937	1583
v/s Ratio Prot	0.04	c0.13		c0.09	0.05		c0.08	0.10		0.08	c0.11	
v/s Ratio Perm			0.16			0.11			c0.21			0.03
v/c Ratio	0.31	0.52	0.16	0.51	0.15	0.11	0.45	0.37	0.21	0.44	0.41	0.03
Uniform Delay, d1	38.8	31.3	0.0	35.3	23.9	0.0	35.7	28.7	0.0	36.0	29.3	0.0
Progression Factor	1.00	1.00	1.00	1.00	1.00	1.00	1.00	1.00	1.00	1.00	1.00	1.00
Incremental Delay, d2	0.8	0.6	0.2	0.6	0.1	0.1	1.0	0.5	0.3	0.5	0.6	0.0
Delay (s)	39.6	31.9	0.2	35.9	24.0	0.1	36.8	29.2	0.3	36.5	29.9	0.0
Level of Service	D	C	A	D	C	A	D	C	A	D	C	A
Approach Delay (s)		22.1			23.4			18.8			30.7	
Approach LOS		C			C			B			C	

Intersection Summary			
HCM Average Control Delay	23.4	HCM Level of Service	C
HCM Volume to Capacity ratio	0.47		
Actuated Cycle Length (s)	96.7	Sum of lost time (s)	12.0
Intersection Capacity Utilization	55.4%	ICU Level of Service	B
Analysis Period (min)	15		
c Critical Lane Group			

Movement	EBL	EBR	NBL	NBT	SBT	SBR
Lane Configurations						
Sign Control	Stop			Free	Free	
Grade	0%			0%	0%	
Volume (veh/h)	30	20	13	300	597	22
Peak Hour Factor	0.63	0.63	0.65	0.83	0.89	0.69
Hourly flow rate (vph)	48	32	20	361	671	32
Pedestrians						
Lane Width (ft)						
Walking Speed (ft/s)						
Percent Blockage						
Right turn flare (veh)						
Median type	None					
Median storage veh)						
Upstream signal (ft)						
pX, platoon unblocked						
vC, conflicting volume	1038	687	703			
vC1, stage 1 conf vol						
vC2, stage 2 conf vol						
vCu, unblocked vol	1038	687	703			
tC, single (s)	6.4	6.2	4.1			
tC, 2 stage (s)						
tF (s)	3.5	3.3	2.2			
p0 queue free %	90	93	98			
cM capacity (veh/h)	233	447	895			

Direction, Lane #	EB 1	NB 1	SB 1
Volume Total	79	381	703
Volume Left	48	20	0
Volume Right	32	0	32
cSH	289	895	1700
Volume to Capacity	0.28	0.02	0.41
Queue Length 95th (ft)	27	2	0
Control Delay (s)	22.1	0.7	0.0
Lane LOS	C	A	
Approach Delay (s)	22.1	0.7	0.0
Approach LOS	C		

Intersection Summary			
Average Delay	1.7		
Intersection Capacity Utilization	42.8%	ICU Level of Service	A
Analysis Period (min)	15		

Movement	WBL	WBR	NBT	NBR	SBL	SBT
Lane Configurations						
Ideal Flow (vphpl)	1900	1900	1900	1900	1900	1900
Total Lost time (s)	3.0	3.0	3.0	3.0	3.0	3.0
Lane Util. Factor	0.97	1.00	0.91	1.00	1.00	0.91
Frt	1.00	0.85	1.00	0.85	1.00	1.00
Flt Protected	0.95	1.00	1.00	1.00	0.95	1.00
Satd. Flow (prot)	3433	1583	5085	1583	1770	5085
Flt Permitted	0.95	1.00	1.00	1.00	0.95	1.00
Satd. Flow (perm)	3433	1583	5085	1583	1770	5085
Volume (vph)	157	157	1647	170	171	3345
Peak-hour factor, PHF	0.87	0.94	0.96	0.83	0.84	0.93
Adj. Flow (vph)	180	167	1716	205	204	3597
RTOR Reduction (vph)	0	0	0	0	0	0
Lane Group Flow (vph)	180	167	1716	205	204	3597
Turn Type		Free		Free	Prot	
Protected Phases	4		2		1	6
Permitted Phases		Free		Free		
Actuated Green, G (s)	10.7	100.0	52.9	100.0	14.4	74.3
Effective Green, g (s)	15.2	100.0	57.4	100.0	18.4	78.8
Actuated g/C Ratio	0.15	1.00	0.57	1.00	0.18	0.79
Clearance Time (s)	7.5		7.5		7.0	7.5
Vehicle Extension (s)	3.0		6.0		3.0	6.0
Lane Grp Cap (vph)	522	1583	2919	1583	326	4007
v/s Ratio Prot	c0.05		0.34		0.12	c0.71
v/s Ratio Perm		0.11		0.13		
v/c Ratio	0.34	0.11	0.59	0.13	0.63	0.90
Uniform Delay, d1	37.9	0.0	13.7	0.0	37.6	7.7
Progression Factor	0.88	1.00	0.42	1.00	1.00	1.00
Incremental Delay, d2	0.4	0.1	0.3	0.1	3.7	3.7
Delay (s)	33.7	0.1	6.1	0.1	41.3	11.3
Level of Service	C	A	A	A	D	B
Approach Delay (s)	17.5		5.5			12.9
Approach LOS	B		A			B

Intersection Summary			
HCM Average Control Delay	10.8	HCM Level of Service	B
HCM Volume to Capacity ratio	0.81		
Actuated Cycle Length (s)	100.0	Sum of lost time (s)	6.0
Intersection Capacity Utilization	75.8%	ICU Level of Service	D
Analysis Period (min)	15		
c Critical Lane Group			

Movement	EBL	EBT	EBR	WBL	WBT	WBR	NBL	NBT	NBR	SBL	SBT	SBR
Lane Configurations												
Ideal Flow (vphpl)	1900	1900	1900	1900	1900	1900	1900	1900	1900	1900	1900	1900
Total Lost time (s)	3.0	3.0	3.0	3.0	3.0	3.0	3.0	3.0	3.0	3.0	3.0	3.0
Lane Util. Factor	0.97	0.95	1.00	0.97	0.95	1.00	0.97	0.95	1.00	0.97	0.95	1.00
Frt	1.00	1.00	0.85	1.00	1.00	0.85	1.00	1.00	0.85	1.00	1.00	0.85
Flt Protected	0.95	1.00	1.00	0.95	1.00	1.00	0.95	1.00	1.00	0.95	1.00	1.00
Satd. Flow (prot)	3433	3539	1583	3433	3539	1583	3433	3539	1583	3433	3539	1583
Flt Permitted	0.95	1.00	1.00	0.95	1.00	1.00	0.95	1.00	1.00	0.95	1.00	1.00
Satd. Flow (perm)	3433	3539	1583	3433	3539	1583	3433	3539	1583	3433	3539	1583
Volume (vph)	9	277	55	121	217	10	27	86	112	29	178	70
Peak-hour factor, PHF	0.45	0.75	0.53	0.76	0.74	0.83	0.40	0.72	0.82	0.81	0.93	0.80
Adj. Flow (vph)	20	369	104	159	293	12	68	119	137	36	191	88
RTOR Reduction (vph)	0	0	0	0	0	0	0	0	95	0	0	0
Lane Group Flow (vph)	20	369	104	159	293	12	68	119	42	36	191	88
Turn Type	Prot		Free	Prot		Free	Prot		pm+ov	Prot		Free
Protected Phases	1	6		5	2		7	4	5	3	8	
Permitted Phases			Free			Free			4			Free
Actuated Green, G (s)	2.5	45.6	100.0	9.4	52.5	100.0	5.9	13.5	22.9	4.0	11.6	100.0
Effective Green, g (s)	6.5	49.6	100.0	13.4	56.5	100.0	9.9	17.0	30.4	8.0	15.1	100.0
Actuated g/C Ratio	0.06	0.50	1.00	0.13	0.56	1.00	0.10	0.17	0.30	0.08	0.15	1.00
Clearance Time (s)	7.0	7.0		7.0	7.0		7.0	6.5	7.0	7.0	6.5	
Vehicle Extension (s)	2.5	4.0		2.5	4.0		2.5	2.5	2.5	2.5	2.5	
Lane Grp Cap (vph)	223	1755	1583	460	2000	1583	340	602	529	275	534	1583
v/s Ratio Prot	0.01	c0.10		c0.05	0.08		c0.02	0.03	0.01	0.01	c0.05	
v/s Ratio Perm			c0.07			0.01			0.02			0.06
v/c Ratio	0.09	0.21	0.07	0.35	0.15	0.01	0.20	0.20	0.08	0.13	0.36	0.06
Uniform Delay, d1	44.0	14.2	0.0	39.3	10.3	0.0	41.4	35.6	24.8	42.8	38.1	0.0
Progression Factor	0.75	1.10	1.00	1.00	1.00	1.00	1.00	1.00	1.00	1.00	1.00	1.00
Incremental Delay, d2	0.1	0.3	0.1	0.3	0.2	0.0	0.2	0.1	0.0	0.2	0.3	0.1
Delay (s)	33.2	15.9	0.1	39.6	10.5	0.0	41.6	35.8	24.9	42.9	38.4	0.1
Level of Service	C	B	A	D	B	A	D	D	C	D	D	A
Approach Delay (s)		13.3			20.2			32.4			28.2	
Approach LOS		B			C			C			C	

Intersection Summary			
HCM Average Control Delay	22.1	HCM Level of Service	C
HCM Volume to Capacity ratio	0.25		
Actuated Cycle Length (s)	100.0	Sum of lost time (s)	12.0
Intersection Capacity Utilization	38.2%	ICU Level of Service	A
Analysis Period (min)	15		

c Critical Lane Group

Movement	EBL	EBT	EBR	WBL	WBT	WBR	NBL	NBT	NBR	SBL	SBT	SBR
Lane Configurations												
Ideal Flow (vphpl)	1900	1900	1900	1900	1900	1900	1900	1900	1900	1900	1900	1900
Total Lost time (s)	3.0	3.0	3.0	3.0	3.0	3.0	3.0	3.0	3.0	3.0	3.0	3.0
Lane Util. Factor	0.97	1.00	1.00	1.00	0.95	1.00	0.97	0.95	1.00	1.00	0.95	1.00
Frt	1.00	1.00	0.85	1.00	1.00	0.85	1.00	1.00	0.85	1.00	1.00	0.85
Flt Protected	0.95	1.00	1.00	0.95	1.00	1.00	0.95	1.00	1.00	0.95	1.00	1.00
Satd. Flow (prot)	3433	1863	1583	1770	3539	1583	3433	3539	1583	1770	3539	1583
Flt Permitted	0.95	1.00	1.00	0.95	1.00	1.00	0.95	1.00	1.00	0.95	1.00	1.00
Satd. Flow (perm)	3433	1863	1583	1770	3539	1583	3433	3539	1583	1770	3539	1583
Volume (vph)	72	38	79	190	113	18	161	593	220	4	646	116
Peak-hour factor, PHF	0.90	0.79	0.66	0.72	0.72	0.64	0.84	0.84	0.79	0.50	0.93	0.83
Adj. Flow (vph)	80	48	120	264	157	28	192	706	278	8	695	140
RTOR Reduction (vph)	0	0	101	0	0	21	0	0	148	0	0	85
Lane Group Flow (vph)	80	48	19	264	157	7	192	706	130	8	695	55
Turn Type	Prot		Perm	Prot		Perm	Prot		Perm	Prot		Perm
Protected Phases	7	4		3	8		1	6		5	2	
Permitted Phases			4			8			6			2
Actuated Green, G (s)	7.9	11.5	11.5	16.8	20.4	20.4	10.0	44.1	44.1	1.9	36.0	36.0
Effective Green, g (s)	11.9	16.5	16.5	20.8	25.4	25.4	14.0	48.6	48.6	5.9	40.5	40.5
Actuated g/C Ratio	0.11	0.16	0.16	0.20	0.24	0.24	0.13	0.47	0.47	0.06	0.39	0.39
Clearance Time (s)	7.0	8.0	8.0	7.0	8.0	8.0	7.0	7.5	7.5	7.0	7.5	7.5
Vehicle Extension (s)	3.0	3.0	3.0	3.0	3.0	3.0	3.0	3.0	3.0	3.0	3.0	3.0
Lane Grp Cap (vph)	394	296	252	355	866	387	463	1657	741	101	1381	618
v/s Ratio Prot	0.02	0.03		c0.15	c0.04		c0.06	0.20		0.00	c0.20	
v/s Ratio Perm			0.01			0.00			0.08			0.03
v/c Ratio	0.20	0.16	0.08	0.74	0.18	0.02	0.41	0.43	0.18	0.08	0.50	0.09
Uniform Delay, d1	41.7	37.7	37.2	39.0	31.0	29.7	41.1	18.3	16.0	46.4	24.0	20.0
Progression Factor	1.00	1.00	1.00	1.00	1.00	1.00	1.00	1.00	1.00	1.00	1.00	1.00
Incremental Delay, d2	0.3	0.3	0.1	8.2	0.1	0.0	0.6	0.2	0.1	0.3	0.3	0.1
Delay (s)	41.9	37.9	37.3	47.2	31.1	29.8	41.7	18.5	16.1	46.7	24.3	20.1
Level of Service	D	D	D	D	C	C	D	B	B	D	C	C
Approach Delay (s)		38.9			40.5			21.7			23.8	
Approach LOS		D			D			C			C	

Intersection Summary			
HCM Average Control Delay	27.0	HCM Level of Service	C
HCM Volume to Capacity ratio	0.48		
Actuated Cycle Length (s)	103.8	Sum of lost time (s)	9.0
Intersection Capacity Utilization	60.5%	ICU Level of Service	B
Analysis Period (min)	15		

c Critical Lane Group

HCM Signalized Intersection Capacity Analysis
15: Severn Way & Route 28

Kincora
Existing Conditions (2008)

Movement	EBL	EBT	EBR	WBL	WBT	WBR	NBL	NBT	NBR	SBL	SBT	SBR
Lane Configurations												
Ideal Flow (vphpl)	1900	1900	1900	1900	1900	1900	1900	1900	1900	1900	1900	1900
Total Lost time (s)	3.0	3.0	3.0	3.0	3.0		3.0	3.0	3.0	3.0	3.0	3.0
Lane Util. Factor	1.00	1.00	1.00	0.97	1.00		1.00	0.91	1.00	1.00	0.91	1.00
Frt	1.00	1.00	0.85	1.00	0.92		1.00	1.00	0.85	1.00	1.00	0.85
Flt Protected	0.95	1.00	1.00	0.95	1.00		0.95	1.00	1.00	0.95	1.00	1.00
Satd. Flow (prot)	1770	1863	1583	3183	1587		1770	5085	1583	1770	5085	1583
Flt Permitted	0.67	1.00	1.00	0.95	1.00		0.95	1.00	1.00	0.95	1.00	1.00
Satd. Flow (perm)	1244	1863	1583	3183	1587		1770	5085	1583	1770	5085	1583
Volume (vph)	6	7	51	125	58	59	353	1822	217	147	3355	126
Peak-hour factor, PHF	0.50	0.44	0.91	0.53	0.91	0.78	0.73	0.82	0.76	0.55	0.88	0.58
Adj. Flow (vph)	12	16	56	236	64	76	484	2222	286	267	3812	217
RTOR Reduction (vph)	0	0	19	0	41	0	0	0	0	0	0	100
Lane Group Flow (vph)	12	16	37	236	99	0	484	2222	286	267	3812	117
Heavy Vehicles (%)	2%	2%	2%	10%	10%	10%	2%	2%	2%	2%	2%	2%
Turn Type	pm+pt		pm+ov	Prot			Prot		Free	Prot		pt+ov
Protected Phases	3	8	1	7	4		1	6		5	2	2 3
Permitted Phases	8		8						Free			
Actuated Green, G (s)	9.0	3.6	18.6	16.1	14.3		15.0	36.8	100.0	15.0	36.8	49.7
Effective Green, g (s)	17.0	7.6	26.6	20.1	18.3		19.0	41.3	100.0	19.0	41.3	53.7
Actuated g/C Ratio	0.17	0.08	0.27	0.20	0.18		0.19	0.41	1.00	0.19	0.41	0.54
Clearance Time (s)	7.0	7.0	7.0	7.0	7.0		7.0	7.5		7.0	7.5	
Vehicle Extension (s)	2.0	2.0	2.0	2.0	2.0		2.0	3.0		2.0	3.0	
Lane Grp Cap (vph)	261	142	469	640	290		336	2100	1583	336	2100	850
v/s Ratio Prot	0.00	0.01	0.01	c0.07	c0.06		c0.27	0.44		0.15	c0.75	0.07
v/s Ratio Perm	0.00		0.01						0.18			
v/c Ratio	0.05	0.11	0.08	0.37	0.34		1.44	1.06	0.18	0.79	1.82	0.14
Uniform Delay, d1	34.7	43.1	27.5	34.5	35.6		40.5	29.4	0.0	38.6	29.4	11.6
Progression Factor	1.00	1.00	1.00	1.00	1.00		1.04	0.79	1.00	0.86	1.03	2.00
Incremental Delay, d2	0.0	0.1	0.0	0.1	0.3		210.2	34.7	0.2	7.4	368.0	0.0
Delay (s)	34.7	43.2	27.5	34.6	35.9		252.2	57.8	0.2	40.8	398.2	23.2
Level of Service	C	D	C	C	D		F	E	A	D	F	C
Approach Delay (s)		31.5			35.1			83.7			357.1	
Approach LOS		C			D			F			F	

Intersection Summary			
HCM Average Control Delay	232.4	HCM Level of Service	F
HCM Volume to Capacity ratio	1.24		
Actuated Cycle Length (s)	100.0	Sum of lost time (s)	9.0
Intersection Capacity Utilization	104.6%	ICU Level of Service	G
Analysis Period (min)	15		

c Critical Lane Group

HCM Signalized Intersection Capacity Analysis
16: Woodland Road & Potomac View Road

Kincora
Existing Conditions (2008)

Movement	EBL	EBR	NBL	NBT	SBT	SBR
Lane Configurations						
Ideal Flow (vphpl)	1900	1900	1900	1900	1900	1900
Total Lost time (s)	3.0	3.0	3.0	3.0	3.0	3.0
Lane Util. Factor	1.00	1.00	1.00	0.95	0.95	1.00
Frt	1.00	0.85	1.00	1.00	1.00	0.85
Flt Protected	0.95	1.00	0.95	1.00	1.00	1.00
Satd. Flow (prot)	1770	1583	1770	3539	3539	1583
Flt Permitted	0.95	1.00	0.27	1.00	1.00	1.00
Satd. Flow (perm)	1770	1583	505	3539	3539	1583
Volume (vph)	97	54	96	957	729	142
Peak-hour factor, PHF	0.81	0.71	0.89	0.85	0.95	0.83
Adj. Flow (vph)	120	76	108	1126	767	171
RTOR Reduction (vph)	0	62	0	0	0	50
Lane Group Flow (vph)	120	14	108	1126	767	121
Turn Type		Perm	pm+pt			pm+ov
Protected Phases	4		1	6	2	4
Permitted Phases		4	6			2
Actuated Green, G (s)	9.9	9.9	49.6	49.6	34.4	44.3
Effective Green, g (s)	13.9	13.9	53.1	53.1	37.9	51.8
Actuated g/C Ratio	0.19	0.19	0.73	0.73	0.52	0.71
Clearance Time (s)	7.0	7.0	7.0	6.5	6.5	7.0
Vehicle Extension (s)	3.0	3.0	4.0	4.0	4.0	3.0
Lane Grp Cap (vph)	337	301	579	2574	1837	1188
v/s Ratio Prot	c0.07		0.03	c0.32	0.22	0.02
v/s Ratio Perm		0.01	0.10			0.06
v/c Ratio	0.36	0.05	0.19	0.44	0.42	0.10
Uniform Delay, d1	25.7	24.1	3.7	4.0	10.8	3.3
Progression Factor	1.00	1.00	1.00	1.00	1.00	1.00
Incremental Delay, d2	0.6	0.1	0.2	0.2	0.2	0.0
Delay (s)	26.3	24.2	3.9	4.1	11.0	3.4
Level of Service	C	C	A	A	B	A
Approach Delay (s)	25.5			4.1	9.6	
Approach LOS	C			A	A	

Intersection Summary			
HCM Average Control Delay	8.1	HCM Level of Service	A
HCM Volume to Capacity ratio	0.42		
Actuated Cycle Length (s)	73.0	Sum of lost time (s)	6.0
Intersection Capacity Utilization	42.2%	ICU Level of Service	A
Analysis Period (min)	15		

c Critical Lane Group

HCM Signalized Intersection Capacity Analysis — Kincora
17: Steeplechase Drive & Route 28 — Existing Conditions (2008)

Movement	EBL	EBT	EBR	WBL	WBT	WBR	NBL	NBT	NBR	SBL	SBT	SBR
Lane Configurations												
Ideal Flow (vphpl)	1900	1900	1900	1900	1900	1900	1900	1900	1900	1900	1900	1900
Total Lost time (s)		3.0		3.0	3.0	3.0	3.0	3.0	3.0	3.0	3.0	3.0
Lane Util. Factor		1.00		0.95	0.95	1.00	1.00	0.91	1.00	1.00	0.91	1.00
Frt		0.91		1.00	1.00	0.85	1.00	1.00	0.85	1.00	1.00	0.85
Flt Protected		0.98		0.95	0.95	1.00	0.95	1.00	1.00	0.95	1.00	1.00
Satd. Flow (prot)		1667		1681	1681	1583	1770	5085	1583	1770	5085	1583
Flt Permitted		0.98		0.95	0.95	1.00	0.95	1.00	1.00	0.95	1.00	1.00
Satd. Flow (perm)		1667		1681	1681	1583	1770	5085	1583	1770	5085	1583
Volume (vph)	1	0	2	88	0	28	3	2293	314	135	3267	3
Peak-hour factor, PHF	0.25	0.25	0.25	0.85	0.25	0.75	0.38	0.89	0.80	0.85	0.88	0.38
Adj. Flow (vph)	4	0	8	104	0	37	8	2576	392	159	3712	8
RTOR Reduction (vph)	0	8	0	0	0	34	0	0	166	0	0	2
Lane Group Flow (vph)	0	4	0	52	52	3	8	2576	226	159	3712	6
Turn Type	Split			Split		Perm	Prot		Perm	Prot		Perm
Protected Phases	4	4		3	3		1	6		5	2	
Permitted Phases						3			6			2
Actuated Green, G (s)		1.2		4.8	4.8	4.8	1.0	53.2	53.2	12.3	64.5	64.5
Effective Green, g (s)		5.2		8.8	8.8	8.8	5.0	57.7	57.7	16.3	69.0	69.0
Actuated g/C Ratio		0.05		0.09	0.09	0.09	0.05	0.58	0.58	0.16	0.69	0.69
Clearance Time (s)		7.0		7.0	7.0	7.0	7.0	7.5	7.5	7.0	7.5	7.5
Vehicle Extension (s)		5.0		5.0	5.0	5.0	2.0	2.0	2.0	2.0	2.0	2.0
Lane Grp Cap (vph)		87		148	148	139	89	2934	913	289	3509	1092
v/s Ratio Prot		c0.00		c0.03	0.03		0.00	0.51		c0.09	c0.73	
v/s Ratio Perm						0.00			0.14			0.00
v/c Ratio		0.05		0.35	0.35	0.02	0.09	0.88	0.25	0.55	1.06	0.01
Uniform Delay, d1		45.1		42.9	42.9	41.7	45.3	18.1	10.4	38.5	15.5	4.8
Progression Factor		1.00		1.00	1.00	1.00	1.00	1.00	1.00	1.28	1.94	0.48
Incremental Delay, d2		0.5		3.0	3.0	0.1	0.2	4.1	0.6	0.1	26.9	0.0
Delay (s)		45.6		45.9	45.9	41.8	45.5	22.2	11.1	49.2	56.9	2.3
Level of Service		D		D	D	D	D	C	B	D	E	A
Approach Delay (s)		45.6			44.8			20.8			56.4	
Approach LOS		D			D			C			E	

Intersection Summary			
HCM Average Control Delay	41.1	HCM Level of Service	D
HCM Volume to Capacity ratio	0.90		
Actuated Cycle Length (s)	100.0	Sum of lost time (s)	12.0
Intersection Capacity Utilization	83.4%	ICU Level of Service	E
Analysis Period (min)	15		

c Critical Lane Group

HCM Signalized Intersection Capacity Analysis — Kincora
18: Farmwell Road & Ashburn Village Blvd. — Existing Conditions (2008)

Movement	EBL	EBT	EBR	WBL	WBT	WBR	NBL	NBT	NBR	SBL	SBT	SBR
Lane Configurations												
Ideal Flow (vphpl)	1900	1900	1900	1900	1900	1900	1900	1900	1900	1900	1900	1900
Total Lost time (s)	3.0	3.0	3.0	3.0	3.0	3.0	3.0	3.0	3.0	3.0	3.0	3.0
Lane Util. Factor	1.00	0.95	1.00	1.00	0.95	1.00	1.00	0.95	1.00	0.97	1.00	1.00
Frt	1.00	1.00	0.85	1.00	1.00	0.85	1.00	1.00	0.85	1.00	1.00	0.85
Flt Protected	0.95	1.00	1.00	0.95	1.00	1.00	0.95	1.00	1.00	0.95	1.00	1.00
Satd. Flow (prot)	1770	3539	1583	1770	3539	1583	1770	3539	1583	3433	1863	1583
Flt Permitted	0.43	1.00	1.00	0.07	1.00	1.00	0.95	1.00	1.00	0.95	1.00	1.00
Satd. Flow (perm)	796	3539	1583	134	3539	1583	1770	3539	1583	3433	1863	1583
Volume (vph)	120	1068	252	103	362	216	62	227	110	674	535	402
Peak-hour factor, PHF	0.86	0.92	0.94	0.83	0.91	0.92	0.78	0.81	0.76	0.91	0.80	0.73
Adj. Flow (vph)	140	1161	268	124	398	235	79	280	145	741	669	551
RTOR Reduction (vph)	0	0	0	0	0	148	0	0	115	0	0	243
Lane Group Flow (vph)	140	1161	268	124	398	87	79	280	30	741	669	308
Turn Type	pm+pt		Free	pm+pt		Perm	Prot		Perm	Prot		Perm
Protected Phases	1	6		5	2		3	8		7	4	
Permitted Phases	6		Free	2		2			8			4
Actuated Green, G (s)	61.8	52.0	150.0	61.2	51.7	51.7	9.1	25.2	25.2	35.8	51.9	51.9
Effective Green, g (s)	69.8	56.0	150.0	69.2	55.7	55.7	13.1	28.7	28.7	39.8	55.4	55.4
Actuated g/C Ratio	0.47	0.37	1.00	0.46	0.37	0.37	0.09	0.19	0.19	0.27	0.37	0.37
Clearance Time (s)	7.0	7.0		7.0	7.0	7.0	7.0	6.5	6.5	7.0	6.5	6.5
Vehicle Extension (s)	2.0	3.0		2.0	3.0	3.0	2.0	2.0	2.0	2.0	2.0	2.0
Lane Grp Cap (vph)	460	1321	1583	209	1314	588	155	677	303	911	688	585
v/s Ratio Prot	0.03	c0.33		c0.05	0.11		0.04	0.08		c0.22	c0.36	
v/s Ratio Perm	0.11		c0.17	0.22		0.06			0.02			0.19
v/c Ratio	0.30	0.88	0.17	0.59	0.30	0.15	0.51	0.41	0.10	0.81	0.97	0.53
Uniform Delay, d1	23.7	43.8	0.0	31.6	33.4	31.4	65.4	53.3	50.0	51.6	46.5	37.0
Progression Factor	1.00	1.00	1.00	1.00	1.00	1.00	1.00	1.00	1.00	1.00	1.00	1.00
Incremental Delay, d2	0.1	8.5	0.2	3.0	0.6	0.5	1.0	0.1	0.1	5.3	27.3	0.4
Delay (s)	23.8	52.4	0.2	34.6	34.0	31.9	66.3	53.4	50.1	56.9	73.8	37.4
Level of Service	C	D	A	C	C	C	E	D	D	E	E	D
Approach Delay (s)		40.9			33.4			54.5			57.2	
Approach LOS		D			C			D			E	

Intersection Summary			
HCM Average Control Delay	47.8	HCM Level of Service	D
HCM Volume to Capacity ratio	0.87		
Actuated Cycle Length (s)	150.0	Sum of lost time (s)	9.0
Intersection Capacity Utilization	80.9%	ICU Level of Service	D
Analysis Period (min)	15		

c Critical Lane Group

HCM Signalized Intersection Capacity Analysis
19: Farmwell Road & Smith Switch Road

Kincora
Existing Conditions (2008)

Movement	EBL	EBT	EBR	WBL	WBT	WBR	NBL	NBT	NBR	SBL	SBT	SBR
Lane Configurations												
Ideal Flow (vphpl)	1900	1900	1900	1900	1900	1900	1900	1900	1900	1900	1900	1900
Total Lost time (s)	3.0	3.0	3.0	3.0	3.0	3.0	3.0	3.0	3.0	3.0	3.0	
Lane Util. Factor	1.00	0.95	1.00	1.00	0.95	1.00	1.00	0.95	1.00	1.00	0.95	
Frt	1.00	1.00	0.85	1.00	1.00	0.85	1.00	1.00	0.85	1.00	0.93	
Flt Protected	0.95	1.00	1.00	0.95	1.00	1.00	0.95	1.00	1.00	0.95	1.00	
Satd. Flow (prot)	1770	3539	1583	1770	3539	1583	1770	3539	1583	1770	3294	
Flt Permitted	0.39	1.00	1.00	0.04	1.00	1.00	0.72	1.00	1.00	0.55	1.00	
Satd. Flow (perm)	730	3539	1583	82	3539	1583	1344	3539	1583	1016	3294	
Volume (vph)	34	1790	29	224	587	82	15	53	352	88	13	16
Peak-hour factor, PHF	0.57	0.92	0.52	0.75	0.86	0.68	0.42	0.70	0.84	0.50	0.46	0.67
Adj. Flow (vph)	60	1946	56	299	683	121	36	76	419	176	28	24
RTOR Reduction (vph)	0	0	17	0	0	64	0	0	29	0	21	0
Lane Group Flow (vph)	60	1946	39	299	683	57	36	76	390	176	31	0
Turn Type	pm+pt		custom	pm+pt		custom	pm+pt		pm+ov	pm+pt		
Protected Phases	1	6		5	2		3	8	5	7	4	
Permitted Phases	6		8	2		4	8		8	4		
Actuated Green, G (s)	140.0	133.0	12.0	157.5	143.5	17.4	19.1	12.0	30.0	29.5	17.4	
Effective Green, g (s)	147.5	136.5	15.5	161.0	147.0	20.9	24.6	15.5	37.0	33.0	20.9	
Actuated g/C Ratio	0.74	0.68	0.08	0.80	0.74	0.10	0.12	0.08	0.18	0.16	0.10	
Clearance Time (s)	7.0	6.5	6.5	6.5	6.5	6.5	5.0	6.5	6.5	5.0	6.5	
Vehicle Extension (s)	2.0	3.0	2.0	2.0	3.0	2.0	2.0	2.0	2.0	2.0	2.0	
Lane Grp Cap (vph)	596	2415	123	247	2601	165	185	274	317	222	344	
v/s Ratio Prot	0.01	0.55		0.13	0.19		0.01	0.02	c0.13	c0.06	0.01	
v/s Ratio Perm	0.07		0.02	c0.85		0.04	0.02		0.11	0.07		
v/c Ratio	0.10	0.81	0.32	1.21	0.26	0.34	0.19	0.28	1.23	0.79	0.09	
Uniform Delay, d1	7.1	22.4	87.3	71.4	3.7	83.2	78.5	87.0	81.5	78.5	80.9	
Progression Factor	1.00	1.00	1.00	0.84	0.92	0.77	1.00	1.00	1.00	1.00	1.00	
Incremental Delay, d2	0.0	3.0	0.6	125.7	0.2	0.4	0.2	0.2	128.7	16.4	0.0	
Delay (s)	7.2	25.4	87.8	185.5	8.3	84.7	78.7	87.2	210.2	94.8	81.0	
Level of Service	A	C	F	F	A	E	E	F	F	F	F	
Approach Delay (s)		26.6			62.5			183.7			91.7	
Approach LOS		C			E			F			F	

Intersection Summary			
HCM Average Control Delay	61.7	HCM Level of Service	E
HCM Volume to Capacity ratio	1.18		
Actuated Cycle Length (s)	200.0	Sum of lost time (s)	6.0
Intersection Capacity Utilization	86.2%	ICU Level of Service	E
Analysis Period (min)	15		

c Critical Lane Group

HCM Signalized Intersection Capacity Analysis
20: Waxpool Road & Loudoun County Pkwy

Kincora
Existing Conditions (2008)

Movement	EBL	EBT	EBR	WBL	WBT	WBR	NBL	NBT	NBR	SBL	SBT	SBR
Lane Configurations												
Ideal Flow (vphpl)	1900	1900	1900	1900	1900	1900	1900	1900	1900	1900	1900	1900
Total Lost time (s)	3.0	3.0	3.0	3.0	3.0	3.0	3.0	3.0	3.0	3.0	3.0	3.0
Lane Util. Factor	0.97	0.95	1.00	0.97	0.91	1.00	1.00	0.95	1.00	0.91	0.91	1.00
Frt	1.00	1.00	0.85	1.00	1.00	0.85	1.00	1.00	0.85	1.00	1.00	0.85
Flt Protected	0.95	1.00	1.00	0.95	1.00	1.00	0.95	1.00	1.00	0.95	0.97	1.00
Satd. Flow (prot)	3433	3539	1583	3433	5085	1583	1770	3539	1583	1610	3281	1583
Flt Permitted	0.95	1.00	1.00	0.95	1.00	1.00	0.95	1.00	1.00	0.95	0.97	1.00
Satd. Flow (perm)	3433	3539	1583	3433	5085	1583	1770	3539	1583	1610	3281	1583
Volume (vph)	59	2001	9	402	852	394	70	331	1253	474	91	62
Peak-hour factor, PHF	0.67	0.91	0.32	0.88	0.96	0.88	0.76	0.94	0.89	0.90	0.69	0.50
Adj. Flow (vph)	88	2199	28	457	888	448	92	352	1408	527	132	124
RTOR Reduction (vph)	0	0	8	0	0	0	0	0	6	0	0	0
Lane Group Flow (vph)	88	2199	20	457	888	448	92	352	1402	264	395	124
Turn Type	Prot		Perm	Prot		Free	Split		pm+ov	Split		Free
Protected Phases	5	2		1	6		4	4	1	3	3	
Permitted Phases			2			Free			4			Free
Actuated Green, G (s)	10.6	121.0	121.0	15.5	125.9	200.0	24.0	24.0	39.5	10.5	10.5	200.0
Effective Green, g (s)	14.6	125.5	125.5	19.5	130.4	200.0	28.5	28.5	48.0	14.5	14.5	200.0
Actuated g/C Ratio	0.07	0.63	0.63	0.10	0.65	1.00	0.14	0.14	0.24	0.07	0.07	1.00
Clearance Time (s)	7.0	7.5	7.5	7.0	7.5		7.5	7.5	7.0	7.0	7.0	
Vehicle Extension (s)	3.0	4.0	4.0	3.0	4.0		3.0	3.0	3.0	3.0	3.0	
Lane Grp Cap (vph)	251	2221	993	335	3315	1583	252	504	404	117	238	1583
v/s Ratio Prot	0.03	c0.62		0.13	0.17		0.05	0.10	c0.34	c0.16	0.12	
v/s Ratio Perm			0.01			0.28			0.55			0.08
v/c Ratio	0.35	0.99	0.02	1.36	0.27	0.28	0.37	0.70	3.47	2.26	2.16dl	0.08
Uniform Delay, d1	88.2	36.6	14.1	90.2	14.7	0.0	77.6	81.7	76.0	92.8	92.8	0.0
Progression Factor	1.09	0.78	0.48	1.00	1.00	1.00	1.00	1.00	1.00	0.98	0.98	1.00
Incremental Delay, d2	0.4	10.9	0.0	182.0	0.2	0.4	0.9	4.2	1117.8	590.3	313.8	0.1
Delay (s)	96.9	39.5	6.7	272.3	14.9	0.4	78.5	85.9	1193.8	680.9	404.7	0.1
Level of Service	F	D	A	F	B	A	E	F	F	F	F	A
Approach Delay (s)		41.3			76.9			927.8			433.7	
Approach LOS		D			E			F			F	

Intersection Summary			
HCM Average Control Delay	339.8	HCM Level of Service	F
HCM Volume to Capacity ratio	1.75		
Actuated Cycle Length (s)	200.0	Sum of lost time (s)	9.0
Intersection Capacity Utilization	156.0%	ICU Level of Service	H
Analysis Period (min)	15		

dl Defacto Left Lane. Recode with 1 though lane as a left lane.
c Critical Lane Group

HCM Signalized Intersection Capacity Analysis
21: Waxpool Road & Pacific Blvd.

Kincora
Existing Conditions (2008)

Movement	EBL	EBT	EBR	WBL	WBT	WBR	NBL	NBT	NBR	SBL	SBT	SBR
Lane Configurations												
Ideal Flow (vphpl)	1900	1900	1900	1900	1900	1900	1900	1900	1900	1900	1900	1900
Total Lost time (s)	3.0	3.0	3.0	3.0	3.0	3.0	3.0	3.0	3.0	3.0	3.0	3.0
Lane Util. Factor	0.97	0.91	1.00	0.97	0.86	1.00	0.91	0.86	0.91	0.91	0.91	1.00
Frt	1.00	1.00	0.85	1.00	1.00	0.85	1.00	0.93	0.85	1.00	1.00	0.85
Flt Protected	0.95	1.00	1.00	0.95	1.00	1.00	0.95	0.99	1.00	0.95	0.97	1.00
Satd. Flow (prot)	3433	5085	1583	3433	6408	1583	1610	2951	1441	1610	3274	1583
Flt Permitted	0.95	1.00	1.00	0.95	1.00	1.00	0.95	0.99	1.00	0.95	0.97	1.00
Satd. Flow (perm)	3433	5085	1583	3433	6408	1583	1610	2951	1441	1610	3274	1583
Volume (vph)	120	3056	10	427	1999	198	7	5	53	149	53	62
Peak-hour factor, PHF	0.55	0.88	0.58	0.73	0.82	0.76	0.50	0.44	0.91	0.53	0.91	0.78
Adj. Flow (vph)	218	3473	17	585	2438	261	14	11	58	281	58	79
RTOR Reduction (vph)	0	0	5	0	0	0	0	14	6	0	0	0
Lane Group Flow (vph)	218	3473	12	585	2438	261	8	18	37	141	198	79
Turn Type	Prot		Perm	Prot		Free	Split		pm+ov	Split		Free
Protected Phases	1	6		5	2		4	4	5	3	3	
Permitted Phases			6			Free			4			Free
Actuated Green, G (s)	13.9	90.6	90.6	28.0	104.7	170.0	7.2	7.2	35.2	16.2	16.2	170.0
Effective Green, g (s)	13.9	94.6	94.6	32.0	108.7	170.0	11.2	11.2	43.2	20.2	20.2	170.0
Actuated g/C Ratio	0.11	0.56	0.56	0.19	0.64	1.00	0.07	0.07	0.25	0.12	0.12	1.00
Clearance Time (s)	7.0	7.0	7.0	7.0	7.0		7.0	7.0	7.0	7.0	7.0	
Vehicle Extension (s)	2.0	3.0	3.0	2.0	3.0		3.0	3.0	2.0	3.0	3.0	
Lane Grp Cap (vph)	361	2830	881	646	4097	1583	106	194	392	191	389	1583
v/s Ratio Prot	0.06	c0.68		c0.17	0.38		0.00	0.01	0.02	c0.09	0.06	
v/s Ratio Perm			0.01			c0.16			0.01			0.05
v/c Ratio	0.60	1.23	0.01	0.91	0.60	0.16	0.08	0.09	0.09	0.74	0.51	0.05
Uniform Delay, d1	72.7	37.7	16.9	67.5	17.8	0.0	74.5	74.6	48.5	72.3	70.2	0.0
Progression Factor	1.00	1.00	1.00	1.00	1.00	1.00	1.00	1.00	1.00	1.00	1.00	1.00
Incremental Delay, d2	2.0	105.6	0.0	15.9	0.6	0.2	0.3	0.2	0.0	13.8	1.1	0.1
Delay (s)	74.6	143.3	16.9	83.5	18.5	0.2	74.8	74.8	48.5	86.2	71.3	0.1
Level of Service	E	F	B	F	B	A	E	E	D	F	E	A
Approach Delay (s)		138.7			28.6			61.2			62.9	
Approach LOS		F			C			E			E	

Intersection Summary

HCM Average Control Delay	85.3	HCM Level of Service	F
HCM Volume to Capacity ratio	1.01		
Actuated Cycle Length (s)	170.0	Sum of lost time (s)	9.0
Intersection Capacity Utilization	92.0%	ICU Level of Service	F
Analysis Period (min)	15		

c Critical Lane Group

HCM Signalized Intersection Capacity Analysis
22: Church Road & Ruritan Circle

Kincora
Existing Conditions (2008)

Movement	EBL	EBT	EBR	WBL	WBT	WBR	NBL	NBT	NBR	SBL	SBT	SBR
Lane Configurations												
Ideal Flow (vphpl)	1900	1900	1900	1900	1900	1900	1900	1900	1900	1900	1900	1900
Total Lost time (s)		3.0		3.0	3.0			3.0	3.0		3.0	
Lane Util. Factor		1.00		1.00	1.00			1.00	1.00		1.00	
Frt		0.97		1.00	1.00			1.00	0.85		0.93	
Flt Protected		1.00		0.95	1.00			0.96	1.00		0.99	
Satd. Flow (prot)		1811		1770	1858			1780	1583		1704	
Flt Permitted		0.30		0.14	1.00			0.96	1.00		0.99	
Satd. Flow (perm)		553		255	1858			1780	1583		1704	
Volume (vph)	24	804	188	218	1042	7	118	3	144	4	3	14
Peak-hour factor, PHF	0.55	0.91	0.85	0.73	0.82	0.35	0.70	0.25	0.86	0.50	0.38	0.70
Adj. Flow (vph)	44	884	221	299	1271	20	169	12	167	8	8	20
RTOR Reduction (vph)	0	8	0	0	0	0	0	0	0	0	18	0
Lane Group Flow (vph)	0	1141	0	299	1291	0	0	181	167	0	18	0
Turn Type	Perm			pm+pt			Split		Perm	Split		
Protected Phases		6		5	2		4	4		8	8	
Permitted Phases	6			2					4			
Actuated Green, G (s)		39.5		54.6	54.6			12.1	12.1		4.3	
Effective Green, g (s)		42.5		57.6	57.6			15.1	15.1		7.3	
Actuated g/C Ratio		0.48		0.65	0.65			0.17	0.17		0.08	
Clearance Time (s)		6.0		5.5	6.0			6.0	6.0		6.0	
Vehicle Extension (s)		4.0		2.0	4.0			3.0	3.0		3.0	
Lane Grp Cap (vph)		264		371	1202			302	269		140	
v/s Ratio Prot				0.11	c0.69			0.10			c0.01	
v/s Ratio Perm		c2.06		0.41					c0.11			
v/c Ratio		4.32		0.81	1.07			0.60	0.62		0.13	
Uniform Delay, d1		23.2		18.2	15.7			34.2	34.3		37.9	
Progression Factor		1.00		1.00	1.00			1.00	1.00		1.00	
Incremental Delay, d2		1504.0		11.4	48.2			3.2	4.4		0.4	
Delay (s)		1527.2		29.6	63.9			37.3	38.7		38.3	
Level of Service		F		C	E			D	D		D	
Approach Delay (s)		1527.2			57.5			38.0			38.3	
Approach LOS		F			E			D			D	

Intersection Summary

HCM Average Control Delay	595.8	HCM Level of Service	F
HCM Volume to Capacity ratio	2.69		
Actuated Cycle Length (s)	89.0	Sum of lost time (s)	12.0
Intersection Capacity Utilization	133.7%	ICU Level of Service	H
Analysis Period (min)	15		

c Critical Lane Group

Movement	EBL	EBT	WBT	WBR	SBL	SBR
Lane Configurations						
Ideal Flow (vphpl)	1900	1900	1900	1900	1900	1900
Total Lost time (s)	3.0	3.0	3.0	3.0	3.0	3.0
Lane Util. Factor	0.97	0.95	0.91	0.91	0.97	1.00
Frt	1.00	1.00	0.98	0.85	1.00	0.85
Flt Protected	0.95	1.00	1.00	1.00	0.95	1.00
Satd. Flow (prot)	3433	3539	3318	1441	3433	1583
Flt Permitted	0.95	1.00	1.00	1.00	0.95	1.00
Satd. Flow (perm)	3433	3539	3318	1441	3433	1583
Volume (vph)	564	398	364	351	278	522
Peak-hour factor, PHF	0.94	0.93	0.95	0.86	0.83	0.85
Adj. Flow (vph)	600	428	383	408	335	614
RTOR Reduction (vph)	0	0	9	20	0	448
Lane Group Flow (vph)	600	428	437	325	335	166
Turn Type	Prot			pm+ov		Perm
Protected Phases	5	2	6	4	4	
Permitted Phases				6		4
Actuated Green, G (s)	16.6	41.9	18.3	32.5	14.2	14.2
Effective Green, g (s)	20.6	45.9	22.3	41.0	18.7	18.7
Actuated g/C Ratio	0.29	0.65	0.32	0.58	0.26	0.26
Clearance Time (s)	7.0	7.0	7.0	7.5	7.5	7.5
Vehicle Extension (s)	2.0	3.0	3.0	3.0	3.0	3.0
Lane Grp Cap (vph)	1002	2301	1048	898	909	419
v/s Ratio Prot	c0.17	0.12	c0.13	c0.10	0.10	
v/s Ratio Perm				0.13		0.10
v/c Ratio	0.60	0.19	0.42	0.36	0.37	0.40
Uniform Delay, d1	21.5	4.9	19.0	7.9	21.1	21.3
Progression Factor	1.00	1.00	1.00	1.00	1.00	1.00
Incremental Delay, d2	0.6	0.0	0.3	0.2	0.3	0.6
Delay (s)	22.1	5.0	19.3	8.1	21.4	21.9
Level of Service	C	A	B	A	C	C
Approach Delay (s)		15.0	14.4		21.7	
Approach LOS		B	B		C	

Intersection Summary

HCM Average Control Delay	17.1	HCM Level of Service	B
HCM Volume to Capacity ratio	0.45		
Actuated Cycle Length (s)	70.6	Sum of lost time (s)	6.0
Intersection Capacity Utilization	52.8%	ICU Level of Service	A
Analysis Period (min)	15		

c Critical Lane Group

HCM Signalized Intersection Capacity Analysis
1: Route 7 & Janelia Farm Blvd.

Kincora
Existing Conditions (2008)

Movement	EBL	EBT	EBR	WBL	WBT	WBR	NBL	NBT	NBR	SBL	SBT	SBR
Lane Configurations												
Ideal Flow (vphpl)	1900	1900	1900	1900	1900	1900	1900	1900	1900	1900	1900	1900
Total Lost time (s)	3.0	3.0	3.0	3.0	3.0	3.0	3.0	3.0	3.0	3.0	3.0	3.0
Lane Util. Factor	0.97	0.91	1.00	0.97	0.91	1.00	0.95	0.95	1.00	0.97	1.00	1.00
Frt	1.00	1.00	0.85	1.00	1.00	0.85	1.00	1.00	0.85	1.00	1.00	0.85
Flt Protected	0.95	1.00	1.00	0.95	1.00	1.00	0.95	0.97	1.00	0.95	1.00	1.00
Satd. Flow (prot)	3433	4940	1583	3433	4940	1583	1681	1713	1583	3433	1863	1583
Flt Permitted	0.95	1.00	1.00	0.95	1.00	1.00	0.95	0.97	1.00	0.95	1.00	1.00
Satd. Flow (perm)	3433	4940	1583	3433	4940	1583	1681	1713	1583	3433	1863	1583
Volume (vph)	4	2161	222	497	3512	321	327	70	278	317	124	10
Peak-hour factor, PHF	0.50	0.92	0.88	0.87	0.97	0.91	0.91	0.92	0.87	0.89	0.82	0.63
Adj. Flow (vph)	8	2349	252	571	3621	353	359	76	320	356	151	16
RTOR Reduction (vph)	0	0	0	0	0	63	0	0	1	0	0	4
Lane Group Flow (vph)	8	2349	252	571	3621	290	212	223	319	356	151	12
Heavy Vehicles (%)	2%	5%	2%	2%	5%	2%	2%	2%	2%	2%	2%	2%
Turn Type	Prot		Free	Prot		Perm	Split		pm+ov	Split		pm+ov
Protected Phases	1	6		5	2		4	4	5	3	3	1
Permitted Phases			Free			2			4			3
Actuated Green, G (s)	2.2	96.9	190.0	32.1	126.8	126.8	20.0	20.0	52.1	13.0	13.0	15.2
Effective Green, g (s)	6.2	100.9	190.0	36.1	130.8	130.8	24.0	24.0	60.1	17.0	17.0	23.2
Actuated g/C Ratio	0.03	0.53	1.00	0.19	0.69	0.69	0.13	0.13	0.32	0.09	0.09	0.12
Clearance Time (s)	7.0	7.0		7.0	7.0	7.0	7.0	7.0	7.0	7.0	7.0	7.0
Vehicle Extension (s)	2.0	3.0		2.0	3.0	3.0	2.0	2.0	2.0	3.0	3.0	2.0
Lane Grp Cap (vph)	112	2623	1583	652	3401	1090	212	216	526	307	167	193
v/s Ratio Prot	0.00	0.48		c0.17	c0.73		0.13	c0.13	0.12	c0.10	0.08	0.00
v/s Ratio Perm			0.16			0.18			0.09			0.01
v/c Ratio	0.07	0.90	0.16	0.88	1.06	0.27	1.00	1.03	0.61	1.16	0.90	0.06
Uniform Delay, d1	89.1	39.8	0.0	74.8	29.6	11.3	83.0	83.0	54.9	86.5	85.7	73.8
Progression Factor	1.00	1.00	1.00	0.75	1.24	2.16	1.00	1.00	1.00	1.00	1.00	1.00
Incremental Delay, d2	0.1	5.3	0.2	1.3	29.9	0.1	61.8	69.9	1.4	101.9	42.9	0.1
Delay (s)	89.2	45.1	0.2	57.5	66.6	24.5	144.8	152.9	56.3	188.4	128.5	73.9
Level of Service	F	D	A	E	E	C	F	F	E	F	F	E
Approach Delay (s)		40.9			62.2			109.7			167.6	
Approach LOS		D			E			F			F	

Intersection Summary

HCM Average Control Delay	66.4	HCM Level of Service	E
HCM Volume to Capacity ratio	1.07		
Actuated Cycle Length (s)	190.0	Sum of lost time (s)	12.0
Intersection Capacity Utilization	105.3%	ICU Level of Service	G
Analysis Period (min)	15		

c Critical Lane Group

HCM Signalized Intersection Capacity Analysis
2: Route 7 & Smith Circle

Kincora
Existing Conditions (2008)

Movement	EBL	EBT	EBR	WBL	WBT	WBR	NBL	NBT	NBR	SBL	SBT	SBR
Lane Configurations												
Ideal Flow (vphpl)	1900	1900	1900	1900	1900	1900	1900	1900	1900	1900	1900	1900
Total Lost time (s)	3.0	3.0	3.0	3.0	3.0	3.0	3.0	3.0	3.0		3.0	
Lane Util. Factor	1.00	0.91	1.00	0.97	0.91	1.00	0.95	0.95	1.00		1.00	
Frt	1.00	1.00	0.85	1.00	1.00	0.85	1.00	1.00	0.85		0.94	
Flt Protected	0.95	1.00	1.00	0.95	1.00	1.00	0.95	0.97	1.00		0.98	
Satd. Flow (prot)	1770	4940	1583	3433	4940	1583	1681	1709	1583		1724	
Flt Permitted	0.95	1.00	1.00	0.95	1.00	1.00	0.95	0.97	1.00		0.98	
Satd. Flow (perm)	1770	4940	1583	3433	4940	1583	1681	1709	1583		1724	
Volume (vph)	201	2541	14	262	4294	18	23	4	231	14	7	13
Peak-hour factor, PHF	0.48	0.87	0.54	0.95	0.98	0.71	0.52	0.50	0.90	0.70	0.58	0.54
Adj. Flow (vph)	419	2921	26	276	4382	25	44	8	257	20	12	24
RTOR Reduction (vph)	0	0	8	0	0	6	0	0	0	0	14	0
Lane Group Flow (vph)	419	2921	18	276	4382	19	25	27	257	0	42	0
Heavy Vehicles (%)	2%	5%	2%	2%	5%	2%	2%	2%	2%	2%	2%	2%
Turn Type	Prot		Perm	Prot		Perm	Split		Free	Split		
Protected Phases	1	6		5	2		4	4		3	3	
Permitted Phases			6			2			Free			
Actuated Green, G (s)	15.1	124.0	124.0	17.7	126.6	126.6	9.6	9.6	190.0		10.2	
Effective Green, g (s)	19.1	128.5	128.5	21.7	131.1	131.1	13.6	13.6	190.0		14.2	
Actuated g/C Ratio	0.10	0.68	0.68	0.11	0.69	0.69	0.07	0.07	1.00		0.07	
Clearance Time (s)	7.0	7.5	7.5	7.0	7.5	7.5	7.0	7.0			7.0	
Vehicle Extension (s)	3.0	3.0	3.0	3.0	3.0	3.0	3.0	3.0			3.0	
Lane Grp Cap (vph)	178	3341	1071	392	3409	1092	120	122	1583		129	
v/s Ratio Prot	c0.24	0.59		0.08	c0.89		0.01	c0.02			c0.02	
v/s Ratio Perm			0.01			0.01			c0.18			
v/c Ratio	2.35	0.87	0.02	0.70	1.29	0.02	0.21	0.22	0.16		0.33	
Uniform Delay, d1	85.5	24.4	10.1	81.1	29.5	9.2	83.1	83.2	0.0		83.4	
Progression Factor	0.98	0.49	0.66	1.20	0.51	0.44	1.00	1.00	1.00		1.00	
Incremental Delay, d2	619.0	2.0	0.0	0.5	128.7	0.0	0.9	0.9	0.2		1.5	
Delay (s)	703.2	13.9	6.6	98.1	143.7	4.1	84.0	84.1	0.2		84.8	
Level of Service	F	B	A	F	F	A	F	F	A		F	
Approach Delay (s)		99.7			140.3			14.3			84.8	
Approach LOS		F			F			B			F	

Intersection Summary

HCM Average Control Delay	119.0	HCM Level of Service	F
HCM Volume to Capacity ratio	1.22		
Actuated Cycle Length (s)	190.0	Sum of lost time (s)	9.0
Intersection Capacity Utilization	114.1%	ICU Level of Service	H
Analysis Period (min)	15		

c Critical Lane Group

Movement	EBL	EBT	EBR	WBL	WBT	WBR	NBL	NBT	NBR	SBL	SBT	SBR
Lane Configurations												
Ideal Flow (vphpl)	1900	1900	1900	1900	1900	1900	1900	1900	1900	1900	1900	1900
Total Lost time (s)	3.0	3.0	3.0	3.0	3.0	3.0	3.0	3.0	3.0	3.0	3.0	3.0
Lane Util. Factor	1.00	0.91	1.00	0.97	0.91	1.00	1.00	1.00	1.00	0.97	1.00	1.00
Frt	1.00	1.00	0.85	1.00	1.00	0.85	1.00	1.00	1.00	0.85	1.00	0.85
Flt Protected	0.95	1.00	1.00	0.95	1.00	1.00	0.95	1.00	1.00	0.95	1.00	1.00
Satd. Flow (prot)	1770	4940	1583	3433	4940	1583	1770	1863	1583	3433	1863	1583
Flt Permitted	0.95	1.00	1.00	0.95	1.00	1.00	0.95	1.00	1.00	0.95	1.00	1.00
Satd. Flow (perm)	1770	4940	1583	3433	4940	1583	1770	1863	1583	3433	1863	1583
Volume (vph)	162	2541	83	147	3957	7	398	90	160	26	63	219
Peak-hour factor, PHF	0.78	0.96	0.73	0.85	0.96	0.58	0.87	0.64	0.95	0.81	0.88	0.94
Adj. Flow (vph)	208	2647	114	173	4122	12	457	141	168	32	72	233
RTOR Reduction (vph)	0	0	0	0	0	3	0	0	0	0	0	69
Lane Group Flow (vph)	208	2647	114	173	4122	9	457	141	168	32	72	164
Heavy Vehicles (%)	2%	5%	2%	2%	5%	2%	2%	2%	2%	2%	2%	2%
Turn Type	Prot		Free	Prot		Perm	Prot		Free	Prot		Perm
Protected Phases	1	6		5	2		3	8		7	4	
Permitted Phases			Free			2			Free			4
Actuated Green, G (s)	15.0	128.6	190.0	10.0	123.6	123.6	10.5	13.9	190.0	8.0	11.4	11.4
Effective Green, g (s)	19.0	133.1	190.0	14.0	128.1	128.1	14.5	18.9	190.0	12.0	16.4	16.4
Actuated g/C Ratio	0.10	0.70	1.00	0.07	0.67	0.67	0.08	0.10	1.00	0.06	0.09	0.09
Clearance Time (s)	7.0	7.5		7.0	7.5	7.5	7.0	8.0		7.0	8.0	8.0
Vehicle Extension (s)	2.0	3.0		2.0	3.0	3.0	2.0	2.0		2.0	2.0	2.0
Lane Grp Cap (vph)	177	3461	1583	253	3331	1067	135	185	1583	217	161	137
v/s Ratio Prot	c0.12	0.54		0.05	c0.83		c0.26	0.08		0.01	0.04	
v/s Ratio Perm			0.07			0.01			c0.11			c0.10
v/c Ratio	1.18	0.76	0.07	0.68	1.24	0.01	3.39	0.76	0.11	0.15	0.45	1.20
Uniform Delay, d1	85.5	18.4	0.0	85.8	31.0	10.1	87.8	83.4	0.0	84.2	82.5	86.8
Progression Factor	0.74	1.63	1.00	1.22	0.15	0.00	1.00	1.00	1.00	1.00	1.00	1.00
Incremental Delay, d2	107.2	0.9	0.0	0.6	107.1	0.0	1091.9	15.3	0.1	0.1	0.7	140.7
Delay (s)	170.1	30.3	0.0	105.6	111.6	0.0	1179.7	98.6	0.1	84.3	83.2	227.5
Level of Service	F	C	A	F	F	A	F	F	A	F	F	F
Approach Delay (s)		39.4			111.1			722.0			183.1	
Approach LOS		D			F			F			F	

Intersection Summary			
HCM Average Control Delay	144.4	HCM Level of Service	F
HCM Volume to Capacity ratio	1.37		
Actuated Cycle Length (s)	190.0	Sum of lost time (s)	12.0
Intersection Capacity Utilization	124.1%	ICU Level of Service	H
Analysis Period (min)	15		

c Critical Lane Group

Movement	EBL	EBT	EBR	WBL	WBT	WBR	NBL	NBT	NBR	SBL	SBT	SBR
Lane Configurations												
Ideal Flow (vphpl)	1900	1900	1900	1900	1900	1900	1900	1900	1900	1900	1900	1900
Total Lost time (s)	3.0	3.0	3.0	3.0	3.0	3.0	3.0	3.0		3.0	3.0	
Lane Util. Factor	1.00	0.91	1.00	1.00	0.91	1.00	1.00	1.00		0.95	0.95	
Frt	1.00	1.00	0.85	1.00	1.00	0.85	1.00	0.85		1.00	0.95	
Flt Protected	0.95	1.00	1.00	0.95	1.00	1.00	0.95	1.00		0.95	0.97	
Satd. Flow (prot)	1770	4940	1583	1770	4940	1583	1770	1583		1681	1630	
Flt Permitted	0.95	1.00	1.00	0.95	1.00	1.00	0.95	1.00		0.95	0.97	
Satd. Flow (perm)	1770	4940	1583	1770	4940	1583	1770	1583		1681	1630	
Volume (vph)	236	2485	6	10	4042	497	14	0	18	317	1	55
Peak-hour factor, PHF	0.33	0.88	0.58	0.83	0.95	0.85	0.70	0.25	0.40	0.88	0.25	0.81
Adj. Flow (vph)	715	2824	10	12	4255	585	20	0	40	360	4	68
RTOR Reduction (vph)	0	0	3	0	0	136	0	37	0	0	9	0
Lane Group Flow (vph)	715	2824	7	12	4255	449	20	3	0	222	201	0
Heavy Vehicles (%)	2%	5%	2%	2%	5%	2%	2%	2%	2%	2%	2%	2%
Turn Type	Prot		Perm	Prot		Perm	Split			Split		
Protected Phases	1	6		5	2		3	3		4	4	
Permitted Phases			6			2						
Actuated Green, G (s)	13.6	125.1	125.1	4.0	115.5	115.5	8.1	8.1		23.8	23.8	
Effective Green, g (s)	17.6	130.1	130.1	8.0	120.5	120.5	12.1	12.1		27.8	27.8	
Actuated g/C Ratio	0.09	0.68	0.68	0.04	0.63	0.63	0.06	0.06		0.15	0.15	
Clearance Time (s)	7.0	8.0	8.0	7.0	8.0	8.0	7.0	7.0		7.0	7.0	
Vehicle Extension (s)	3.0	3.0	3.0	3.0	3.0	3.0	3.0	3.0		3.0	3.0	
Lane Grp Cap (vph)	164	3383	1084	75	3133	1004	113	101		246	238	
v/s Ratio Prot	c0.40	0.57		0.01	c0.86		c0.01	0.00		c0.13	0.12	
v/s Ratio Perm			0.00			0.28						
v/c Ratio	4.36	0.83	0.01	0.16	1.36	0.45	0.18	0.03		0.90	0.84	
Uniform Delay, d1	86.2	22.0	9.5	87.8	34.8	17.7	84.2	83.4		79.8	79.0	
Progression Factor	0.90	0.89	1.12	1.00	1.00	1.00	1.00	1.00		1.00	1.00	
Incremental Delay, d2	1523.6	2.2	0.0	1.0	163.3	1.4	0.8	0.1		32.6	22.8	
Delay (s)	1601.6	21.8	10.6	88.8	198.1	19.2	85.0	83.5		112.4	101.8	
Level of Service	F	C	B	F	F	B	F	F		F	F	
Approach Delay (s)		340.0			176.2			84.0			107.2	
Approach LOS		F			F			F			F	

Intersection Summary			
HCM Average Control Delay	237.6	HCM Level of Service	F
HCM Volume to Capacity ratio	1.50		
Actuated Cycle Length (s)	190.0	Sum of lost time (s)	12.0
Intersection Capacity Utilization	118.3%	ICU Level of Service	H
Analysis Period (min)	15		

c Critical Lane Group

Movement	EBL	EBT	EBR	WBL	WBT	WBR	NBL	NBT	NBR	SBL	SBT	SBR
Lane Configurations												
Ideal Flow (vphpl)	1900	1900	1900	1900	1900	1900	1900	1900	1900	1900	1900	1900
Total Lost time (s)	3.0	3.0	3.0	3.0	3.0	3.0	3.0	3.0	3.0	3.0	3.0	3.0
Lane Util. Factor	0.97	0.91	1.00	0.97	0.91	1.00	0.97	0.95	1.00	0.97	0.95	1.00
Frt	1.00	1.00	0.85	1.00	1.00	0.85	1.00	1.00	0.85	1.00	1.00	0.85
Flt Protected	0.95	1.00	1.00	0.95	1.00	1.00	0.95	1.00	1.00	0.95	1.00	1.00
Satd. Flow (prot)	3433	5085	1583	3433	5085	1583	3433	3539	1583	3433	3539	1583
Flt Permitted	0.95	1.00	1.00	0.95	1.00	1.00	0.95	1.00	1.00	0.95	1.00	1.00
Satd. Flow (perm)	3433	5085	1583	3433	5085	1583	3433	3539	1583	3433	3539	1583
Volume (vph)	451	1591	143	624	2118	187	183	148	360	186	163	286
Peak-hour factor, PHF	0.66	0.86	0.87	0.70	0.94	0.89	0.83	0.80	0.89	0.72	0.87	0.72
Adj. Flow (vph)	683	1850	164	891	2253	210	220	185	404	258	187	397
RTOR Reduction (vph)	0	0	0	0	0	13	0	0	0	0	0	5
Lane Group Flow (vph)	683	1850	164	891	2253	197	220	185	404	258	187	392
Turn Type	Prot		Free	Prot		pm+ov	Prot		Free	Prot		pm+ov
Protected Phases	1	6		5	2	3	7	4		3	8	1
Permitted Phases			Free			2			Free			8
Actuated Green, G (s)	37.1	88.0	180.0	30.0	80.9	98.6	12.7	16.3	180.0	17.7	21.3	58.4
Effective Green, g (s)	41.1	92.0	180.0	34.0	84.9	106.6	16.7	20.3	180.0	21.7	25.3	66.4
Actuated g/C Ratio	0.23	0.51	1.00	0.19	0.47	0.59	0.09	0.11	1.00	0.12	0.14	0.37
Clearance Time (s)	7.0	7.0		7.0	7.0	7.0	7.0	7.0		7.0	7.0	7.0
Vehicle Extension (s)	2.0	2.0		3.0	2.0	2.0	2.0	2.0		2.0	2.0	2.0
Lane Grp Cap (vph)	784	2599	1583	648	2398	964	319	399	1583	414	497	610
v/s Ratio Prot	c0.20	0.36		c0.26	c0.44	0.02	c0.06	0.05		c0.08	0.05	c0.15
v/s Ratio Perm			0.10			0.10			0.26			0.10
v/c Ratio	0.87	0.71	0.10	1.38	0.94	0.20	0.69	0.46	0.26	0.62	0.38	0.64
Uniform Delay, d1	66.9	33.8	0.0	73.0	45.1	17.0	79.1	74.8	0.0	75.3	70.2	47.0
Progression Factor	1.00	1.00	1.00	1.19	0.59	0.51	1.00	1.00	1.00	1.00	1.00	1.00
Incremental Delay, d2	10.1	1.7	0.1	173.3	4.6	0.0	4.9	0.3	0.4	2.1	0.2	1.7
Delay (s)	77.0	35.5	0.1	259.9	31.1	8.7	84.0	75.1	0.4	77.4	70.4	48.7
Level of Service	E	D	A	F	C	A	F	E	A	E	E	D
Approach Delay (s)		43.9			90.5			40.2			62.3	
Approach LOS		D			F			D			E	

Intersection Summary			
HCM Average Control Delay	65.8	HCM Level of Service	E
HCM Volume to Capacity ratio	0.94		
Actuated Cycle Length (s)	180.0	Sum of lost time (s)	9.0
Intersection Capacity Utilization	77.4%	ICU Level of Service	D
Analysis Period (min)	15		

c Critical Lane Group

Movement	EBL	EBT	EBR	WBL	WBT	WBR	NBL	NBT	NBR	SBL	SBT	SBR
Lane Configurations												
Ideal Flow (vphpl)	1900	1900	1900	1900	1900	1900	1900	1900	1900	1900	1900	1900
Total Lost time (s)	3.0	3.0	3.0	3.0	3.0	3.0	3.0	3.0	3.0	3.0	3.0	3.0
Lane Util. Factor	0.97	0.91	1.00	1.00	0.91	1.00	0.97	1.00	1.00	0.97	1.00	1.00
Frt	1.00	1.00	0.85	1.00	1.00	0.85	1.00	1.00	0.85	1.00	1.00	0.85
Flt Protected	0.95	1.00	1.00	0.95	1.00	1.00	0.95	1.00	1.00	0.95	1.00	1.00
Satd. Flow (prot)	3433	5085	1583	1770	5085	1583	3433	1863	1583	3433	1863	1583
Flt Permitted	0.95	1.00	1.00	0.95	1.00	1.00	0.95	1.00	1.00	0.95	1.00	1.00
Satd. Flow (perm)	3433	5085	1583	1770	5085	1583	3433	1863	1583	3433	1863	1583
Volume (vph)	283	1719	135	74	2304	161	391	97	234	225	77	234
Peak-hour factor, PHF	0.71	0.90	0.82	0.77	0.96	0.81	0.79	0.87	0.76	0.92	0.96	0.87
Adj. Flow (vph)	399	1910	165	96	2400	199	495	111	308	245	80	269
RTOR Reduction (vph)	0	0	0	0	0	0	0	0	122	0	0	155
Lane Group Flow (vph)	399	1910	165	96	2400	199	495	111	186	245	80	114
Turn Type	Prot		Free	Prot		Free	Split		Perm	Split		Perm
Protected Phases	1	6		5	2		4	4		3	3	
Permitted Phases			Free			Free			4			3
Actuated Green, G (s)	24.3	97.1	180.0	12.5	85.3	180.0	25.3	25.3	25.3	17.1	17.1	17.1
Effective Green, g (s)	28.3	101.1	180.0	16.5	89.3	180.0	29.3	29.3	29.3	21.1	21.1	21.1
Actuated g/C Ratio	0.16	0.56	1.00	0.09	0.50	1.00	0.16	0.16	0.16	0.12	0.12	0.12
Clearance Time (s)	7.0	7.0		7.0	7.0		7.0	7.0	7.0	7.0	7.0	7.0
Vehicle Extension (s)	2.0	4.0		2.0	4.0		3.0	3.0	3.0	3.0	3.0	3.0
Lane Grp Cap (vph)	540	2856	1583	162	2523	1583	559	303	258	402	218	186
v/s Ratio Prot	c0.12	0.38		0.05	c0.47		c0.14	0.06		0.07	0.04	
v/s Ratio Perm			0.10			0.13			0.12			c0.07
v/c Ratio	0.74	0.67	0.10	0.59	0.95	0.13	0.89	0.37	0.72	0.61	0.37	0.81
Uniform Delay, d1	72.3	27.7	0.0	78.5	43.3	0.0	73.7	67.1	71.5	75.5	73.3	75.5
Progression Factor	0.92	1.06	1.00	1.00	1.00	1.00	1.00	1.00	1.00	1.00	1.00	1.00
Incremental Delay, d2	3.6	1.0	0.1	3.8	9.7	0.2	15.5	0.8	9.5	2.6	1.0	5.8
Delay (s)	70.0	30.4	0.1	82.4	52.9	0.2	89.2	67.8	80.9	78.1	74.3	81.4
Level of Service	E	C	A	F	D	A	F	E	F	E	E	F
Approach Delay (s)		34.8			50.1			83.8			79.1	
Approach LOS		C			D			F			E	

Intersection Summary			
HCM Average Control Delay	51.6	HCM Level of Service	D
HCM Volume to Capacity ratio	0.86		
Actuated Cycle Length (s)	180.0	Sum of lost time (s)	12.0
Intersection Capacity Utilization	80.4%	ICU Level of Service	D
Analysis Period (min)	15		

c Critical Lane Group

Movement	WBL	WBR	NBT	NBR	SBL	SBT
Lane Configurations						
Ideal Flow (vphpl)	1900	1900	1900	1900	1900	1900
Total Lost time (s)	3.0	3.0	3.0		3.0	3.0
Lane Util. Factor	1.00	1.00	0.95		1.00	0.95
Frt	1.00	0.85	0.97		1.00	1.00
Flt Protected	0.95	1.00	1.00		0.95	1.00
Satd. Flow (prot)	1770	1583	3435		1770	3539
Flt Permitted	0.95	1.00	1.00		0.19	1.00
Satd. Flow (perm)	1770	1583	3435		363	3539
Volume (vph)	112	262	594	117	250	528
Peak-hour factor, PHF	0.72	0.91	0.87	0.70	0.73	0.87
Adj. Flow (vph)	156	288	683	167	342	607
RTOR Reduction (vph)	0	99	19	0	0	0
Lane Group Flow (vph)	156	189	831	0	342	607
Turn Type		pm+ov			pm+pt	
Protected Phases	4	1	2		1	6
Permitted Phases		4			6	
Actuated Green, G (s)	8.2	18.8	21.1		38.7	38.7
Effective Green, g (s)	12.2	26.8	25.6		43.2	43.2
Actuated g/C Ratio	0.20	0.44	0.42		0.70	0.70
Clearance Time (s)	7.0	7.0	7.5		7.0	7.5
Vehicle Extension (s)	2.0	2.0	2.0		2.0	2.0
Lane Grp Cap (vph)	352	768	1432		590	2490
v/s Ratio Prot	c0.09	0.06	0.24		c0.14	0.17
v/s Ratio Perm		0.06			c0.27	
v/c Ratio	0.44	0.25	0.58		0.58	0.24
Uniform Delay, d1	21.6	10.9	13.8		5.9	3.3
Progression Factor	1.00	1.00	1.00		1.00	1.00
Incremental Delay, d2	0.3	0.1	0.4		0.9	0.0
Delay (s)	21.9	11.0	14.2		6.8	3.3
Level of Service	C	B	B		A	A
Approach Delay (s)	14.8		14.2			4.5
Approach LOS	B		B			A

Intersection Summary			
HCM Average Control Delay	10.2	HCM Level of Service	B
HCM Volume to Capacity ratio	0.55		
Actuated Cycle Length (s)	61.4	Sum of lost time (s)	6.0
Intersection Capacity Utilization	50.2%	ICU Level of Service	A
Analysis Period (min)	15		

c Critical Lane Group

Movement	EBL	EBT	EBR	WBL	WBT	WBR	NBL	NBT	NBR	SBL	SBT	SBR
Lane Configurations												
Sign Control		Stop			Stop			Free			Free	
Grade		0%			0%			0%			0%	
Volume (veh/h)	29	2	82	37	0	30	148	732	83	29	533	72
Peak Hour Factor	0.73	0.25	0.79	0.58	0.25	0.75	0.88	0.91	0.80	0.73	0.85	0.82
Hourly flow rate (vph)	40	8	104	64	0	40	168	804	104	40	627	88
Pedestrians												
Lane Width (ft)												
Walking Speed (ft/s)												
Percent Blockage												
Right turn flare (veh)												
Median type		None			None							
Median storage veh)												
Upstream signal (ft)											1257	
pX, platoon unblocked												
vC, conflicting volume	1485	1951	314	1642	1935	402	715			908		
vC1, stage 1 conf vol												
vC2, stage 2 conf vol												
vCu, unblocked vol	1485	1951	314	1642	1935	402	715			908		
tC, single (s)	7.5	6.5	6.9	7.5	6.5	6.9	4.1			4.1		
tC, 2 stage (s)												
tF (s)	3.5	4.0	3.3	3.5	4.0	3.3	2.2			2.2		
p0 queue free %	40	84	85	0	100	93	81			95		
cM capacity (veh/h)	66	49	682	40	50	598	881			745		

Direction, Lane #	EB 1	EB 2	WB 1	WB 2	NB 1	NB 2	NB 3	NB 4	SB 1	SB 2	SB 3	SB 4
Volume Total	48	104	64	40	168	402	402	104	40	314	314	88
Volume Left	40	0	64	0	168	0	0	0	40	0	0	0
Volume Right	0	104	0	40	0	0	0	104	0	0	0	88
cSH	62	682	40	598	881	1700	1700	1700	745	1700	1700	1700
Volume to Capacity	0.77	0.15	1.58	0.07	0.19	0.24	0.24	0.06	0.05	0.18	0.18	0.05
Queue Length 95th (ft)	85	13	164	5	18	0	0	0	4	0	0	0
Control Delay (s)	160.4	11.2	509.8	11.5	10.0	0.0	0.0	0.0	10.1	0.0	0.0	0.0
Lane LOS	F	B	F	B	B				B			
Approach Delay (s)	58.2		317.7		1.6				0.5			
Approach LOS	F		F									

Intersection Summary			
Average Delay	21.0		
Intersection Capacity Utilization	42.3%	ICU Level of Service	A
Analysis Period (min)	15		

Intersection Sign configuration not allowed in HCM analysis.

Movement	EBL	EBT	EBR	WBL	WBT	WBR	NBL	NBT	NBR	SBL	SBT	SBR
Lane Configurations												
Ideal Flow (vphpl)	1900	1900	1900	1900	1900	1900	1900	1900	1900	1900	1900	1900
Total Lost time (s)	3.0	3.0	3.0	3.0	3.0	3.0	3.0	3.0	3.0	3.0	3.0	3.0
Lane Util. Factor	1.00	0.95	1.00	0.97	0.95	1.00	1.00	0.95	1.00	0.97	0.95	1.00
Frt	1.00	1.00	0.85	1.00	1.00	0.85	1.00	1.00	0.85	1.00	1.00	0.85
Flt Protected	0.95	1.00	1.00	0.95	1.00	1.00	0.95	1.00	1.00	0.95	1.00	1.00
Satd. Flow (prot)	1770	3539	1583	3433	3539	1583	1770	3539	1583	3433	3539	1583
Flt Permitted	0.95	1.00	1.00	0.95	1.00	1.00	0.95	1.00	1.00	0.95	1.00	1.00
Satd. Flow (perm)	1770	3539	1583	3433	3539	1583	1770	3539	1583	3433	3539	1583
Volume (vph)	61	107	239	112	196	183	332	709	142	139	540	88
Peak-hour factor, PHF	0.85	0.86	0.93	0.78	0.89	0.86	0.91	0.98	0.87	0.87	0.77	0.92
Adj. Flow (vph)	72	124	257	144	220	213	365	723	163	160	701	96
RTOR Reduction (vph)	0	0	0	0	0	0	0	0	0	0	0	0
Lane Group Flow (vph)	72	124	257	144	220	213	365	723	163	160	701	96
Turn Type	Prot		Free	Prot		Free	Prot		Free	Prot		Free
Protected Phases	7	4		3	8		5	2		1	6	
Permitted Phases			Free			Free			Free			Free
Actuated Green, G (s)	8.3	17.2	105.5	9.8	18.7	105.5	20.2	40.0	105.5	10.5	30.3	105.5
Effective Green, g (s)	12.3	21.2	105.5	13.8	22.7	105.5	24.2	44.0	105.5	14.5	34.3	105.5
Actuated g/C Ratio	0.12	0.20	1.00	0.13	0.22	1.00	0.23	0.42	1.00	0.14	0.33	1.00
Clearance Time (s)	7.0	7.0		7.0	7.0		7.0	7.0		7.0	7.0	
Vehicle Extension (s)	3.0	3.0		3.0	3.0		3.0	5.0		3.0	5.0	
Lane Grp Cap (vph)	206	711	1583	449	761	1583	406	1476	1583	472	1151	1583
v/s Ratio Prot	c0.04	0.04		0.04	c0.06		c0.21	0.20		0.05	c0.20	
v/s Ratio Perm			c0.16			0.13			0.10			0.06
v/c Ratio	0.35	0.17	0.16	0.32	0.29	0.13	0.90	0.49	0.10	0.34	0.61	0.06
Uniform Delay, d1	42.9	34.9	0.0	41.6	34.6	0.0	39.5	22.5	0.0	41.2	30.0	0.0
Progression Factor	1.00	1.00	1.00	1.00	1.00	1.00	1.00	1.00	1.00	1.00	1.00	1.00
Incremental Delay, d2	1.0	0.1	0.2	0.4	0.2	0.2	21.9	0.5	0.1	0.4	1.4	0.1
Delay (s)	43.9	35.0	0.2	42.0	34.9	0.2	61.4	23.1	0.1	41.6	31.3	0.1
Level of Service	D	D	A	D	C	A	E	C	A	D	C	A
Approach Delay (s)		16.7			23.8			31.3			29.9	
Approach LOS		B			C			C			C	

Intersection Summary			
HCM Average Control Delay	27.5	HCM Level of Service	C
HCM Volume to Capacity ratio	0.56		
Actuated Cycle Length (s)	105.5	Sum of lost time (s)	9.0
Intersection Capacity Utilization	65.9%	ICU Level of Service	C
Analysis Period (min)	15		
c Critical Lane Group			

Movement	EBL	EBR	NBL	NBT	SBT	SBR
Lane Configurations						
Sign Control	Stop			Free	Free	
Grade	0%			0%	0%	
Volume (veh/h)	47	19	10	878	301	19
Peak Hour Factor	0.69	0.48	0.50	0.87	0.85	0.53
Hourly flow rate (vph)	68	40	20	1009	354	36
Pedestrians						
Lane Width (ft)						
Walking Speed (ft/s)						
Percent Blockage						
Right turn flare (veh)						
Median type	None					
Median storage veh)						
Upstream signal (ft)						
pX, platoon unblocked						
vC, conflicting volume	1421	372	390			
vC1, stage 1 conf vol						
vC2, stage 2 conf vol						
vCu, unblocked vol	1421	372	390			
tC, single (s)	6.4	6.2	4.1			
tC, 2 stage (s)						
tF (s)	3.5	3.3	2.2			
p0 queue free %	54	94	98			
cM capacity (veh/h)	148	674	1169			

Direction, Lane #	EB 1	NB 1	SB 1
Volume Total	108	1029	390
Volume Left	68	20	0
Volume Right	40	0	36
cSH	207	1169	1700
Volume to Capacity	0.52	0.02	0.23
Queue Length 95th (ft)	67	1	0
Control Delay (s)	39.8	0.5	0.0
Lane LOS	E	A	
Approach Delay (s)	39.8	0.5	0.0
Approach LOS	E		

Intersection Summary			
Average Delay	3.1		
Intersection Capacity Utilization	64.6%	ICU Level of Service	C
Analysis Period (min)	15		

Movement	WBL	WBR	NBT	NBR	SBL	SBT
Lane Configurations						
Ideal Flow (vphpl)	1900	1900	1900	1900	1900	1900
Total Lost time (s)	3.0	3.0	3.0	3.0	3.0	3.0
Lane Util. Factor	0.97	1.00	0.91	1.00	1.00	0.91
Frt	1.00	0.85	1.00	0.85	1.00	1.00
Flt Protected	0.95	1.00	1.00	1.00	0.95	1.00
Satd. Flow (prot)	3433	1583	5085	1583	1770	5085
Flt Permitted	0.95	1.00	1.00	1.00	0.95	1.00
Satd. Flow (perm)	3433	1583	5085	1583	1770	5085
Volume (vph)	440	439	3871	323	323	1753
Peak-hour factor, PHF	0.87	0.94	0.96	0.83	0.84	0.93
Adj. Flow (vph)	506	467	4032	389	385	1885
RTOR Reduction (vph)	0	0	0	0	0	0
Lane Group Flow (vph)	506	467	4032	389	385	1885
Turn Type		Free		Free	Prot	
Protected Phases	4		2		1	6
Permitted Phases		Free		Free		
Actuated Green, G (s)	14.5	120.0	72.0	120.0	11.5	90.5
Effective Green, g (s)	19.0	120.0	76.5	120.0	15.5	95.0
Actuated g/C Ratio	0.16	1.00	0.64	1.00	0.13	0.79
Clearance Time (s)	7.5		7.5		7.0	7.5
Vehicle Extension (s)	3.0		6.0		3.0	6.0
Lane Grp Cap (vph)	544	1583	3242	1583	229	4026
v/s Ratio Prot	c0.15		c0.79		c0.22	0.37
v/s Ratio Perm		0.29		0.25		
v/c Ratio	0.93	0.30	1.24	0.25	1.68	0.47
Uniform Delay, d1	49.8	0.0	21.8	0.0	52.2	4.1
Progression Factor	1.00	1.00	0.46	1.00	1.00	1.00
Incremental Delay, d2	22.7	0.5	109.9	0.0	324.9	0.4
Delay (s)	72.6	0.5	120.0	0.0	377.1	4.5
Level of Service	E	A	F	A	F	A
Approach Delay (s)	38.0		109.4			67.7
Approach LOS	D		F			E

Intersection Summary			
HCM Average Control Delay	88.0	HCM Level of Service	F
HCM Volume to Capacity ratio	1.25		
Actuated Cycle Length (s)	120.0	Sum of lost time (s)	9.0
Intersection Capacity Utilization	115.2%	ICU Level of Service	H
Analysis Period (min)	15		

c Critical Lane Group

HCM Signalized Intersection Capacity Analysis
13: Nokes Blvd. & Atlantic Blvd.

Kincora
Existing Conditions (2008)

Movement	EBL	EBT	EBR	WBL	WBT	WBR	NBL	NBT	NBR	SBL	SBT	SBR
Lane Configurations												
Ideal Flow (vphpl)	1900	1900	1900	1900	1900	1900	1900	1900	1900	1900	1900	1900
Total Lost time (s)	3.0	3.0	3.0	3.0	3.0	3.0	3.0	3.0	3.0	3.0	3.0	3.0
Lane Util. Factor	0.97	0.95	1.00	0.97	0.95	1.00	0.97	0.95	1.00	0.97	0.95	1.00
Frt	1.00	1.00	0.85	1.00	1.00	0.85	1.00	1.00	0.85	1.00	1.00	0.85
Flt Protected	0.95	1.00	1.00	0.95	1.00	1.00	0.95	1.00	1.00	0.95	1.00	1.00
Satd. Flow (prot)	3433	3539	1583	3433	3539	1583	3433	3539	1583	3433	3539	1583
Flt Permitted	0.95	1.00	1.00	0.95	1.00	1.00	0.95	1.00	1.00	0.95	1.00	1.00
Satd. Flow (perm)	3433	3539	1583	3433	3539	1583	3433	3539	1583	3433	3539	1583
Volume (vph)	211	372	63	223	559	79	131	346	287	33	206	189
Peak-hour factor, PHF	0.73	0.91	0.83	0.94	0.74	0.82	0.57	0.79	0.71	0.83	0.89	0.93
Adj. Flow (vph)	289	409	76	237	755	96	230	438	404	40	231	203
RTOR Reduction (vph)	0	0	0	0	0	0	0	0	236	0	0	0
Lane Group Flow (vph)	289	409	76	237	755	96	230	438	168	40	231	203
Turn Type	Prot		Free	Prot		Free	Prot		pm+ov	Prot		Free
Protected Phases	1	6		5	2		7	4	5	3	8	
Permitted Phases			Free			Free			4			Free
Actuated Green, G (s)	12.8	34.4	100.0	11.6	33.2	100.0	11.4	22.4	34.0	4.1	15.1	100.0
Effective Green, g (s)	16.8	38.4	100.0	15.6	37.2	100.0	15.4	25.9	41.5	8.1	18.6	100.0
Actuated g/C Ratio	0.17	0.38	1.00	0.16	0.37	1.00	0.15	0.26	0.42	0.08	0.19	1.00
Clearance Time (s)	7.0	7.0		7.0	7.0		7.0	6.5	7.0	7.0	6.5	
Vehicle Extension (s)	2.5	4.0		2.5	4.0		2.5	2.5	2.5	2.5	2.5	
Lane Grp Cap (vph)	577	1359	1583	536	1317	1583	529	917	704	278	658	1583
v/s Ratio Prot	c0.08	0.12		0.07	c0.21		c0.07	c0.12	0.04	0.01	0.07	
v/s Ratio Perm			0.05			0.06			0.07			c0.13
v/c Ratio	0.50	0.30	0.05	0.44	0.57	0.06	0.43	0.48	0.24	0.14	0.35	0.13
Uniform Delay, d1	37.8	21.5	0.0	38.3	25.1	0.0	38.4	31.3	19.0	42.7	35.4	0.0
Progression Factor	1.00	1.00	1.00	1.00	1.00	1.00	1.00	1.00	1.00	1.00	1.00	1.00
Incremental Delay, d2	0.5	0.6	0.1	0.4	1.8	0.1	0.4	0.3	0.1	0.2	0.2	0.2
Delay (s)	38.3	22.0	0.1	38.7	26.9	0.1	38.8	31.6	19.1	42.9	35.7	0.2
Level of Service	D	C	A	D	C	A	D	C	B	D	D	A
Approach Delay (s)		25.9			27.1			28.4			21.1	
Approach LOS		C			C			C			C	

Intersection Summary			
HCM Average Control Delay	26.4	HCM Level of Service	C
HCM Volume to Capacity ratio	0.51		
Actuated Cycle Length (s)	100.0	Sum of lost time (s)	9.0
Intersection Capacity Utilization	48.5%	ICU Level of Service	A
Analysis Period (min)	15		
c Critical Lane Group			

HCM Signalized Intersection Capacity Analysis
14: Nokes Blvd. & Cascades Parkway

Kincora
Existing Conditions (2008)

Movement	EBL	EBT	EBR	WBL	WBT	WBR	NBL	NBT	NBR	SBL	SBT	SBR
Lane Configurations												
Ideal Flow (vphpl)	1900	1900	1900	1900	1900	1900	1900	1900	1900	1900	1900	1900
Total Lost time (s)	3.0	3.0	3.0	3.0	3.0	3.0	3.0	3.0	3.0	3.0	3.0	3.0
Lane Util. Factor	0.97	1.00	1.00	1.00	0.95	1.00	0.97	0.95	1.00	1.00	0.95	1.00
Frt	1.00	1.00	0.85	1.00	1.00	0.85	1.00	1.00	0.85	1.00	1.00	0.85
Flt Protected	0.95	1.00	1.00	0.95	1.00	1.00	0.95	1.00	1.00	0.95	1.00	1.00
Satd. Flow (prot)	3433	1863	1583	1770	3539	1583	3433	3539	1583	1770	3539	1583
Flt Permitted	0.95	1.00	1.00	0.95	1.00	1.00	0.95	1.00	1.00	0.95	1.00	1.00
Satd. Flow (perm)	3433	1863	1583	1770	3539	1583	3433	3539	1583	1770	3539	1583
Volume (vph)	329	177	260	238	135	33	244	1187	298	4	848	258
Peak-hour factor, PHF	0.89	0.85	1.00	0.73	0.80	0.83	0.82	0.91	0.89	0.33	0.92	0.78
Adj. Flow (vph)	370	208	260	326	169	40	298	1304	335	12	922	331
RTOR Reduction (vph)	0	0	190	0	0	32	0	0	94	0	0	202
Lane Group Flow (vph)	370	208	70	326	169	8	298	1304	241	12	922	129
Turn Type	Prot		Perm	Prot		Perm	Prot		Perm	Prot		Perm
Protected Phases	7	4		3	8		1	6		5	2	
Permitted Phases			4			8			6			2
Actuated Green, G (s)	17.1	18.1	18.1	20.3	21.3	21.3	13.7	54.7	54.7	3.6	44.6	44.6
Effective Green, g (s)	21.1	23.1	23.1	24.3	26.3	26.3	17.7	59.2	59.2	7.6	49.1	49.1
Actuated g/C Ratio	0.17	0.18	0.18	0.19	0.21	0.21	0.14	0.47	0.47	0.06	0.39	0.39
Clearance Time (s)	7.0	8.0	8.0	7.0	8.0	8.0	7.0	7.5	7.5	7.0	7.5	7.5
Vehicle Extension (s)	3.0	3.0	3.0	3.0	3.0	3.0	3.0	3.0	3.0	3.0	3.0	3.0
Lane Grp Cap (vph)	574	341	290	341	738	330	481	1660	743	107	1377	616
v/s Ratio Prot	0.11	c0.11		c0.18	0.05		c0.09	c0.37		0.01	0.26	
v/s Ratio Perm			0.04			0.01			0.15			0.08
v/c Ratio	0.64	0.61	0.24	0.96	0.23	0.03	0.62	0.79	0.32	0.11	0.67	0.21
Uniform Delay, d1	49.1	47.4	44.1	50.4	41.5	39.7	51.1	28.2	21.0	56.1	31.8	25.6
Progression Factor	1.00	1.00	1.00	1.00	1.00	1.00	1.00	1.00	1.00	1.00	1.00	1.00
Incremental Delay, d2	2.5	3.1	0.4	36.9	0.2	0.0	2.4	2.5	0.3	0.5	1.3	0.2
Delay (s)	51.5	50.5	44.5	87.3	41.7	39.8	53.5	30.7	21.2	56.6	33.1	25.8
Level of Service	D	D	D	F	D	D	D	C	C	E	C	C
Approach Delay (s)		49.1			69.3			32.6			31.4	
Approach LOS		D			E			C			C	

Intersection Summary			
HCM Average Control Delay	39.6	HCM Level of Service	D
HCM Volume to Capacity ratio	0.78		
Actuated Cycle Length (s)	126.2	Sum of lost time (s)	12.0
Intersection Capacity Utilization	77.0%	ICU Level of Service	D
Analysis Period (min)	15		
c Critical Lane Group			

Movement	EBL	EBT	EBR	WBL	WBT	WBR	NBL	NBT	NBR	SBL	SBT	SBR
Lane Configurations												
Ideal Flow (vphpl)	1900	1900	1900	1900	1900	1900	1900	1900	1900	1900	1900	1900
Total Lost time (s)	3.0	3.0	3.0	3.0	3.0		3.0	3.0	3.0	3.0	3.0	3.0
Lane Util. Factor	1.00	1.00	1.00	0.97	1.00		1.00	0.91	1.00	1.00	0.91	1.00
Frt	1.00	1.00	0.85	1.00	0.86		1.00	1.00	0.85	1.00	1.00	0.85
Flt Protected	0.95	1.00	1.00	0.95	1.00		0.95	1.00	1.00	0.95	1.00	1.00
Satd. Flow (prot)	1770	1863	1583	3183	1488		1770	5085	1583	1770	5085	1583
Flt Permitted	0.28	1.00	1.00	0.95	1.00		0.95	1.00	1.00	0.95	1.00	1.00
Satd. Flow (perm)	514	1863	1583	3183	1488		1770	5085	1583	1770	5085	1583
Volume (vph)	299	40	673	304	22	272	51	3768	324	156	2108	10
Peak-hour factor, PHF	0.70	0.83	0.85	0.83	0.92	0.96	0.71	0.91	0.90	0.71	0.92	0.83
Adj. Flow (vph)	427	48	792	366	24	283	72	4141	360	220	2291	12
RTOR Reduction (vph)	0	0	10	0	128	0	0	0	0	0	0	3
Lane Group Flow (vph)	427	48	782	366	179	0	72	4141	360	220	2291	9
Heavy Vehicles (%)	2%	2%	2%	10%	10%	10%	2%	2%	2%	2%	2%	2%
Turn Type	pm+pt		pm+ov	Prot			Prot		Free	Prot		pt+ov
Protected Phases	3	8	1	7	4		1	6		5	2	2 3
Permitted Phases	8		8						Free			
Actuated Green, G (s)	26.0	10.5	17.9	15.0	10.0		7.4	56.0	120.0	10.0	58.6	81.6
Effective Green, g (s)	34.0	14.5	25.9	19.0	14.0		11.4	60.5	120.0	14.0	63.1	85.6
Actuated g/C Ratio	0.28	0.12	0.22	0.16	0.12		0.10	0.50	1.00	0.12	0.53	0.71
Clearance Time (s)	7.0	7.0	7.0	7.0	7.0		7.0	7.5		7.0	7.5	
Vehicle Extension (s)	2.0	2.0	2.0	2.0	2.0		2.0	3.0		2.0	3.0	
Lane Grp Cap (vph)	350	225	381	504	174		168	2564	1583	207	2674	1129
v/s Ratio Prot	c0.20	0.03	c0.19	0.11	0.12		0.04	c0.81		0.12	0.45	0.01
v/s Ratio Perm	0.15		0.30						c0.23			
v/c Ratio	1.22	0.21	2.05	0.73	1.03		0.43	1.62	0.23	1.06	0.86	0.01
Uniform Delay, d1	52.5	47.6	47.0	43.0	53.0		51.2	29.8	0.0	53.0	24.6	5.0
Progression Factor	1.00	1.00	1.00	1.00	1.00		0.74	1.12	1.00	1.11	0.78	0.66
Incremental Delay, d2	122.1	0.2	482.4	4.4	75.8		0.2	277.3	0.1	75.4	3.3	0.0
Delay (s)	174.6	47.8	529.5	52.4	128.8		38.0	310.6	0.1	134.0	22.3	3.3
Level of Service	F	D	F	D	F		D	F	A	F	C	A
Approach Delay (s)		391.6			87.3			281.8			32.0	
Approach LOS		F			F			F			C	

Intersection Summary			
HCM Average Control Delay	213.0	HCM Level of Service	F
HCM Volume to Capacity ratio	1.59		
Actuated Cycle Length (s)	120.0	Sum of lost time (s)	6.0
Intersection Capacity Utilization	129.3%	ICU Level of Service	H
Analysis Period (min)	15		

c Critical Lane Group

Movement	EBL	EBR	NBL	NBT	SBT	SBR
Lane Configurations						
Ideal Flow (vphpl)	1900	1900	1900	1900	1900	1900
Total Lost time (s)	3.0	3.0	3.0	3.0	3.0	3.0
Lane Util. Factor	1.00	1.00	1.00	0.95	0.95	1.00
Frt	1.00	0.85	1.00	1.00	1.00	0.85
Flt Protected	0.95	1.00	0.95	1.00	1.00	1.00
Satd. Flow (prot)	1770	1583	1770	3539	3539	1583
Flt Permitted	0.95	1.00	0.12	1.00	1.00	1.00
Satd. Flow (perm)	1770	1583	231	3539	3539	1583
Volume (vph)	211	183	136	1471	1116	116
Peak-hour factor, PHF	0.94	0.73	0.87	0.96	0.98	0.71
Adj. Flow (vph)	224	251	156	1532	1139	163
RTOR Reduction (vph)	0	188	0	0	0	44
Lane Group Flow (vph)	224	63	156	1532	1139	119
Turn Type		Perm	pm+pt			pm+ov
Protected Phases	4		1	6	2	4
Permitted Phases		4	6			2
Actuated Green, G (s)	14.8	14.8	46.5	46.5	32.3	47.1
Effective Green, g (s)	18.8	18.8	50.0	50.0	35.8	54.6
Actuated g/C Ratio	0.25	0.25	0.67	0.67	0.48	0.73
Clearance Time (s)	7.0	7.0	7.0	6.5	6.5	7.0
Vehicle Extension (s)	3.0	3.0	4.0	4.0	4.0	3.0
Lane Grp Cap (vph)	445	398	385	2366	1694	1219
v/s Ratio Prot	c0.13		0.06	c0.43	0.32	0.02
v/s Ratio Perm		0.04	0.21			0.05
v/c Ratio	0.50	0.16	0.41	0.65	0.67	0.10
Uniform Delay, d1	24.0	21.8	8.3	7.2	15.0	2.9
Progression Factor	1.00	1.00	1.00	1.00	1.00	1.00
Incremental Delay, d2	0.9	0.2	1.0	0.7	1.2	0.0
Delay (s)	24.9	22.0	9.3	7.9	16.2	3.0
Level of Service	C	C	A	A	B	A
Approach Delay (s)	23.4			8.1	14.5	
Approach LOS	C			A	B	

Intersection Summary			
HCM Average Control Delay	12.6	HCM Level of Service	B
HCM Volume to Capacity ratio	0.61		
Actuated Cycle Length (s)	74.8	Sum of lost time (s)	6.0
Intersection Capacity Utilization	60.1%	ICU Level of Service	B
Analysis Period (min)	15		

c Critical Lane Group

HCM Signalized Intersection Capacity Analysis
17: Steeplechase Drive & Route 28

Kincora
Existing Conditions (2008)

Movement	EBL	EBT	EBR	WBL	WBT	WBR	NBL	NBT	NBR	SBL	SBT	SBR
Lane Configurations												
Ideal Flow (vphpl)	1900	1900	1900	1900	1900	1900	1900	1900	1900	1900	1900	1900
Total Lost time (s)		3.0		3.0	3.0	3.0	3.0	3.0	3.0	3.0	3.0	3.0
Lane Util. Factor		1.00		0.95	0.95	1.00	1.00	0.91	1.00	1.00	0.91	1.00
Frt		0.95		1.00	1.00	0.85	1.00	1.00	0.85	1.00	1.00	0.85
Flt Protected		0.98		0.95	0.95	1.00	0.95	1.00	1.00	0.95	1.00	1.00
Satd. Flow (prot)		1734		1681	1681	1583	1770	5085	1583	1770	5085	1583
Flt Permitted		0.98		0.95	0.95	1.00	0.95	1.00	1.00	0.95	1.00	1.00
Satd. Flow (perm)		1734		1681	1681	1583	1770	5085	1583	1770	5085	1583
Volume (vph)	4	1	4	313	0	107	14	3887	125	12	2984	3
Peak-hour factor, PHF	0.38	0.25	0.50	0.81	0.25	0.70	0.70	0.95	0.89	0.75	0.92	0.50
Adj. Flow (vph)	11	4	8	386	0	153	20	4092	140	16	3243	6
RTOR Reduction (vph)	0	7	0	0	0	118	0	0	42	0	0	2
Lane Group Flow (vph)	0	16	0	193	193	35	20	4092	98	16	3243	4
Turn Type	Split			Split		Perm	Prot		Perm	Prot		Perm
Protected Phases	4	4		3	3		1	6		5	2	
Permitted Phases						3			6			2
Actuated Green, G (s)		3.6		6.0	6.0	6.0	2.0	79.9	79.9	2.0	79.9	79.9
Effective Green, g (s)		7.6		10.0	10.0	10.0	6.0	84.4	84.4	6.0	84.4	84.4
Actuated g/C Ratio		0.06		0.08	0.08	0.08	0.05	0.70	0.70	0.05	0.70	0.70
Clearance Time (s)		7.0		7.0	7.0	7.0	7.0	7.5	7.5	7.0	7.5	7.5
Vehicle Extension (s)		5.0		5.0	5.0	5.0	2.0	2.0	2.0	2.0	2.0	2.0
Lane Grp Cap (vph)		110		140	140	132	89	3576	1113	89	3576	1113
v/s Ratio Prot		c0.01		c0.11	0.11		c0.01	c0.80		0.01	0.64	
v/s Ratio Perm						0.02			0.06			0.00
v/c Ratio		0.14		1.38	1.38	0.26	0.22	1.14	0.09	0.18	0.91	0.00
Uniform Delay, d1		53.1		55.0	55.0	51.5	54.8	17.8	5.6	54.6	14.6	5.3
Progression Factor		1.00		1.00	1.00	1.00	1.00	1.00	1.00	1.08	0.50	0.42
Incremental Delay, d2		1.2		208.6	208.6	2.2	0.5	68.7	0.2	0.0	0.4	0.0
Delay (s)		54.3		263.6	263.6	53.8	55.2	86.5	5.8	59.3	7.7	2.2
Level of Service		D		F	F	D	E	F	A	E	A	A
Approach Delay (s)		54.3			204.0			83.7			8.0	
Approach LOS		D			F			F			A	

Intersection Summary			
HCM Average Control Delay	61.0	HCM Level of Service	E
HCM Volume to Capacity ratio	1.04		
Actuated Cycle Length (s)	120.0	Sum of lost time (s)	12.0
Intersection Capacity Utilization	97.1%	ICU Level of Service	F
Analysis Period (min)	15		

c Critical Lane Group

HCM Signalized Intersection Capacity Analysis
18: Farmwell Road & Ashburn Village Blvd.

Kincora
Existing Conditions (2008)

Movement	EBL	EBT	EBR	WBL	WBT	WBR	NBL	NBT	NBR	SBL	SBT	SBR
Lane Configurations												
Ideal Flow (vphpl)	1900	1900	1900	1900	1900	1900	1900	1900	1900	1900	1900	1900
Total Lost time (s)	3.0	3.0	3.0	3.0	3.0	3.0	3.0	3.0	3.0	3.0	3.0	3.0
Lane Util. Factor	1.00	0.95	1.00	1.00	0.95	1.00	1.00	0.95	1.00	0.97	1.00	1.00
Frt	1.00	1.00	0.85	1.00	1.00	0.85	1.00	1.00	0.85	1.00	1.00	0.85
Flt Protected	0.95	1.00	1.00	0.95	1.00	1.00	0.95	1.00	1.00	0.95	1.00	1.00
Satd. Flow (prot)	1770	3539	1583	1770	3539	1583	1770	3539	1583	3433	1863	1583
Flt Permitted	0.06	1.00	1.00	0.28	1.00	1.00	0.95	1.00	1.00	0.95	1.00	1.00
Satd. Flow (perm)	120	3539	1583	528	3539	1583	1770	3539	1583	3433	1863	1583
Volume (vph)	214	603	194	216	1476	1036	127	549	106	469	394	128
Peak-hour factor, PHF	0.85	0.90	0.77	0.84	0.81	0.85	0.88	0.92	0.74	0.75	0.80	0.74
Adj. Flow (vph)	252	670	252	257	1822	1219	144	597	143	625	492	173
RTOR Reduction (vph)	0	0	0	0	0	162	0	0	110	0	0	111
Lane Group Flow (vph)	252	670	252	257	1822	1057	144	597	33	625	492	62
Turn Type	pm+pt		Free	pm+pt		Perm	Prot		Perm	Prot		Perm
Protected Phases	1	6		5	2		3	8		7	4	
Permitted Phases	6		Free	2		2			8			4
Actuated Green, G (s)	68.8	58.3	140.0	74.2	61.0	61.0	13.0	29.0	29.0	12.0	28.0	28.0
Effective Green, g (s)	76.8	62.3	140.0	82.2	65.0	65.0	17.0	32.5	32.5	16.0	31.5	31.5
Actuated g/C Ratio	0.55	0.44	1.00	0.59	0.46	0.46	0.12	0.23	0.23	0.11	0.22	0.22
Clearance Time (s)	7.0	7.0		7.0	7.0	7.0	7.0	6.5	6.5	7.0	6.5	6.5
Vehicle Extension (s)	2.0	3.0		2.0	3.0	3.0	2.0	2.0	2.0	2.0	2.0	2.0
Lane Grp Cap (vph)	237	1575	1583	463	1643	735	215	822	367	392	419	356
v/s Ratio Prot	c0.11	0.19		c0.07	0.51		0.08	0.17		c0.18	c0.26	
v/s Ratio Perm	0.48		c0.16	0.26		c0.67			0.02			0.04
v/c Ratio	1.06	0.43	0.16	0.56	1.11	1.44	0.67	0.73	0.09	1.59	1.17	0.17
Uniform Delay, d1	64.9	26.6	0.0	15.9	37.5	37.5	58.8	49.6	42.2	62.0	54.2	43.8
Progression Factor	1.00	1.00	1.00	1.00	1.00	1.00	1.00	1.00	1.00	1.00	1.00	1.00
Incremental Delay, d2	76.2	0.8	0.2	0.8	58.4	205.0	6.0	2.7	0.0	279.3	100.9	0.1
Delay (s)	141.1	27.4	0.2	16.7	95.9	242.5	64.8	52.4	42.2	341.3	155.1	43.8
Level of Service	F	C	A	B	F	F	E	D	D	F	F	D
Approach Delay (s)		46.0			143.9			52.8			230.4	
Approach LOS		D			F			D			F	

Intersection Summary			
HCM Average Control Delay	131.3	HCM Level of Service	F
HCM Volume to Capacity ratio	1.35		
Actuated Cycle Length (s)	140.0	Sum of lost time (s)	12.0
Intersection Capacity Utilization	101.2%	ICU Level of Service	G
Analysis Period (min)	15		

c Critical Lane Group

Movement	EBL	EBT	EBR	WBL	WBT	WBR	NBL	NBT	NBR	SBL	SBT	SBR
Lane Configurations												
Ideal Flow (vphpl)	1900	1900	1900	1900	1900	1900	1900	1900	1900	1900	1900	1900
Total Lost time (s)	3.0	3.0	3.0	3.0	3.0	3.0	3.0	3.0	3.0	3.0	3.0	
Lane Util. Factor	1.00	0.95	1.00	1.00	0.95	1.00	1.00	0.95	1.00	1.00	0.95	
Frt	1.00	1.00	0.85	1.00	1.00	0.85	1.00	1.00	0.85	1.00	0.93	
Flt Protected	0.95	1.00	1.00	0.95	1.00	1.00	0.95	1.00	1.00	0.95	1.00	
Satd. Flow (prot)	1770	3539	1583	1770	3539	1583	1770	3539	1583	1770	3283	
Flt Permitted	0.03	1.00	1.00	0.18	1.00	1.00	0.36	1.00	1.00	0.71	1.00	
Satd. Flow (perm)	50	3539	1583	336	3539	1583	678	3539	1583	1318	3283	
Volume (vph)	14	1123	24	352	2180	142	115	32	397	162	55	50
Peak-hour factor, PHF	0.35	0.92	0.55	0.86	0.92	0.72	0.82	0.57	0.86	0.79	0.65	0.63
Adj. Flow (vph)	40	1221	44	409	2370	197	140	56	462	205	85	79
RTOR Reduction (vph)	0	0	17	0	0	47	0	0	97	0	73	0
Lane Group Flow (vph)	40	1221	27	409	2370	150	140	56	365	205	91	0
Turn Type	pm+pt		custom	pm+pt		custom	pm+pt		pm+ov	pm+pt		
Protected Phases	1	6	3	5	2	7	3	8	5	7	4	
Permitted Phases	6		8	2		4	8		8	4		
Actuated Green, G (s)	153.0	147.0	22.5	167.5	154.5	22.5	22.5	12.0	26.0	22.5	12.0	
Effective Green, g (s)	160.5	150.5	30.0	171.0	158.0	30.0	30.0	15.5	33.0	30.0	15.5	
Actuated g/C Ratio	0.76	0.72	0.14	0.81	0.75	0.14	0.14	0.07	0.16	0.14	0.07	
Clearance Time (s)	7.0	6.5	7.0	6.5	6.5	7.0	7.0	6.5	6.5	7.0	6.5	
Vehicle Extension (s)	2.0	3.0	2.0	2.0	3.0	2.0	2.0	2.0	2.0	2.0	2.0	
Lane Grp Cap (vph)	120	2536	249	393	2663	249	172	261	271	219	242	
v/s Ratio Prot	0.02	0.34	0.01	0.09	0.67	0.04	0.06	0.02	c0.11	c0.06	0.03	
v/s Ratio Perm	0.24		0.01	c0.76		0.05	0.06		0.12	0.07		
v/c Ratio	0.33	0.48	0.11	1.04	0.89	0.60	0.81	0.21	1.35	0.94	0.38	
Uniform Delay, d1	41.5	12.9	78.4	28.8	19.5	84.4	84.3	91.5	88.5	87.9	92.6	
Progression Factor	1.00	1.00	1.00	2.13	0.46	1.19	1.00	1.00	1.00	1.00	1.00	
Incremental Delay, d2	0.6	0.7	0.1	46.4	3.1	1.7	23.5	0.2	178.7	42.5	0.4	
Delay (s)	42.1	13.5	78.4	107.6	12.0	102.5	107.8	91.7	267.2	130.4	93.0	
Level of Service	D	B	E	F	B	F	F	F	F	F	F	
Approach Delay (s)		16.6			31.1			218.4			113.8	
Approach LOS		B			C			F			F	

Intersection Summary			
HCM Average Control Delay	56.5	HCM Level of Service	E
HCM Volume to Capacity ratio	1.08		
Actuated Cycle Length (s)	210.0	Sum of lost time (s)	6.0
Intersection Capacity Utilization	91.7%	ICU Level of Service	F
Analysis Period (min)	15		

c Critical Lane Group

Movement	EBL	EBT	EBR	WBL	WBT	WBR	NBL	NBT	NBR	SBL	SBT	SBR
Lane Configurations												
Ideal Flow (vphpl)	1900	1900	1900	1900	1900	1900	1900	1900	1900	1900	1900	1900
Total Lost time (s)	3.0	3.0	3.0	3.0	3.0	3.0	3.0	3.0	3.0	3.0	3.0	3.0
Lane Util. Factor	0.97	0.95	1.00	0.97	0.91	1.00	1.00	0.95	1.00	0.91	0.91	1.00
Frt	1.00	1.00	0.85	1.00	1.00	0.85	1.00	1.00	0.85	1.00	1.00	0.85
Flt Protected	0.95	1.00	1.00	0.95	1.00	1.00	0.95	1.00	1.00	0.95	0.98	1.00
Satd. Flow (prot)	3433	3539	1583	3433	5085	1583	1770	3539	1583	1610	3321	1583
Flt Permitted	0.95	1.00	1.00	0.95	1.00	1.00	0.95	1.00	1.00	0.95	0.98	1.00
Satd. Flow (perm)	3433	3539	1583	3433	5085	1583	1770	3539	1583	1610	3321	1583
Volume (vph)	106	1277	123	1155	2789	641	126	180	657	293	207	267
Peak-hour factor, PHF	0.80	0.92	0.90	0.92	0.98	0.89	0.62	0.87	0.93	0.89	0.96	0.95
Adj. Flow (vph)	132	1388	137	1255	2846	720	203	207	706	329	216	281
RTOR Reduction (vph)	0	0	51	0	0	0	0	0	39	0	0	0
Lane Group Flow (vph)	132	1388	86	1255	2846	720	203	207	667	175	370	281
Turn Type	Prot		Perm	Prot		Free	Split		pm+ov	Split		Free
Protected Phases	5	2		1	6		4	4	1	3	3	
Permitted Phases			2			Free			4			Free
Actuated Green, G (s)	10.4	127.0	127.0	28.5	145.1	210.0	12.0	12.0	40.5	13.5	13.5	210.0
Effective Green, g (s)	14.4	131.5	131.5	32.5	149.6	210.0	16.5	16.5	49.0	17.5	17.5	210.0
Actuated g/C Ratio	0.07	0.63	0.63	0.15	0.71	1.00	0.08	0.08	0.23	0.08	0.08	1.00
Clearance Time (s)	7.0	7.5	7.5	7.0	7.5		7.5	7.5	7.0	7.0	7.0	
Vehicle Extension (s)	3.0	4.0	4.0	3.0	4.0		3.0	3.0	3.0	3.0	3.0	
Lane Grp Cap (vph)	235	2216	991	531	3622	1583	139	278	392	134	277	1583
v/s Ratio Prot	0.04	0.39		c0.37	c0.56		0.11	0.06	c0.26	0.11	c0.11	
v/s Ratio Perm			0.05			0.45			0.16			0.18
v/c Ratio	0.56	0.63	0.09	2.36	0.79	0.45	1.46	0.74	1.70	1.31	1.34	0.18
Uniform Delay, d1	94.7	24.1	15.5	88.8	19.7	0.0	96.8	94.7	80.5	96.2	96.2	0.0
Progression Factor	0.90	1.03	2.23	1.23	0.25	1.00	1.00	1.00	1.00	1.00	1.00	1.00
Incremental Delay, d2	2.1	0.9	0.1	615.5	0.6	0.3	242.3	10.3	326.3	181.2	173.6	0.2
Delay (s)	87.8	25.7	34.6	725.0	5.5	0.3	339.1	105.0	406.8	277.5	269.8	0.2
Level of Service	F	C	C	F	A	A	F	F	F	F	F	A
Approach Delay (s)		31.4			192.0			338.5			179.7	
Approach LOS		C			F			F			F	

Intersection Summary			
HCM Average Control Delay	178.6	HCM Level of Service	F
HCM Volume to Capacity ratio	1.17		
Actuated Cycle Length (s)	210.0	Sum of lost time (s)	9.0
Intersection Capacity Utilization	98.1%	ICU Level of Service	F
Analysis Period (min)	15		

c Critical Lane Group

Movement	EBL	EBT	EBR	WBL	WBT	WBR	NBL	NBT	NBR	SBL	SBT	SBR
Lane Configurations												
Ideal Flow (vphpl)	1900	1900	1900	1900	1900	1900	1900	1900	1900	1900	1900	1900
Total Lost time (s)	3.0	3.0	3.0	3.0	3.0	3.0	3.0	3.0	3.0	3.0	3.0	3.0
Lane Util. Factor	0.97	0.91	1.00	0.97	0.86	1.00	0.91	0.86	0.91	0.91	0.91	1.00
Frt	1.00	1.00	0.85	1.00	1.00	0.85	1.00	0.90	0.85	1.00	1.00	0.85
Flt Protected	0.95	1.00	1.00	0.95	1.00	1.00	0.95	0.99	1.00	0.95	0.96	1.00
Satd. Flow (prot)	3433	5085	1583	3433	6408	1583	1610	2854	1441	1610	3247	1583
Flt Permitted	0.95	1.00	1.00	0.95	1.00	1.00	0.95	0.99	1.00	0.95	0.96	1.00
Satd. Flow (perm)	3433	5085	1583	3433	6408	1583	1610	2854	1441	1610	3247	1583
Volume (vph)	156	2047	10	51	3659	324	299	40	673	304	22	272
Peak-hour factor, PHF	0.71	0.92	0.83	0.71	0.91	0.90	0.70	0.83	0.85	0.83	0.92	0.96
Adj. Flow (vph)	220	2225	12	72	4021	360	427	48	792	366	24	283
RTOR Reduction (vph)	0	0	4	0	0	0	0	68	7	0	0	0
Lane Group Flow (vph)	220	2225	8	72	4021	360	258	545	389	183	207	283
Turn Type	Prot		Perm	Prot		Free	Split		pm+ov	Split		Free
Protected Phases	1	6		5	2		4	4	5	3	3	
Permitted Phases			6			Free			4			Free
Actuated Green, G (s)	11.0	132.4	132.4	8.6	130.0	210.0	23.0	23.0	31.6	18.0	18.0	210.0
Effective Green, g (s)	15.0	136.4	136.4	12.6	134.0	210.0	27.0	27.0	39.6	22.0	22.0	210.0
Actuated g/C Ratio	0.07	0.65	0.65	0.06	0.64	1.00	0.13	0.13	0.19	0.10	0.10	1.00
Clearance Time (s)	7.0	7.0	7.0	7.0	7.0		7.0	7.0	7.0	7.0	7.0	
Vehicle Extension (s)	2.0	3.0	3.0	2.0	3.0		3.0	3.0	2.0	3.0	3.0	
Lane Grp Cap (vph)	245	3303	1028	206	4089	1583	207	367	292	169	340	1583
v/s Ratio Prot	0.06	0.44		0.02	c0.63		0.16	c0.19	c0.08	c0.11	0.06	
v/s Ratio Perm			0.00			c0.23			0.19			0.18
v/c Ratio	0.90	0.67	0.01	0.35	0.98	0.23	1.25	1.57dr	1.33	1.08	1.04dl	0.18
Uniform Delay, d1	96.7	22.9	13.0	94.8	36.9	0.0	91.5	91.5	85.2	94.0	89.9	0.0
Progression Factor	1.00	1.09	1.48	1.00	1.00	1.00	1.00	1.00	1.00	1.00	1.00	1.00
Incremental Delay, d2	4.3	0.1	0.0	0.4	10.7	0.3	144.6	232.4	170.7	93.1	3.1	0.2
Delay (s)	101.1	25.0	19.2	95.1	47.6	0.3	236.1	323.9	255.9	187.1	93.0	0.2
Level of Service	F	C	B	F	D	A	F	F	F	F	F	A
Approach Delay (s)		31.8			44.6			284.8			79.6	
Approach LOS		C			D			F			E	

Intersection Summary			
HCM Average Control Delay	78.1	HCM Level of Service	E
HCM Volume to Capacity ratio	1.08		
Actuated Cycle Length (s)	210.0	Sum of lost time (s)	9.0
Intersection Capacity Utilization	90.6%	ICU Level of Service	E
Analysis Period (min)	15		

dl Defacto Left Lane. Recode with 1 though lane as a left lane.
dr Defacto Right Lane. Recode with 1 though lane as a right lane.
c Critical Lane Group

Movement	EBL	EBT	EBR	WBL	WBT	WBR	NBL	NBT	NBR	SBL	SBT	SBR
Lane Configurations												
Ideal Flow (vphpl)	1900	1900	1900	1900	1900	1900	1900	1900	1900	1900	1900	1900
Total Lost time (s)		3.0		3.0	3.0			3.0	3.0		3.0	
Lane Util. Factor		1.00		1.00	1.00			1.00	1.00		1.00	
Frt		0.99		1.00	1.00			1.00	0.85		0.93	
Flt Protected		1.00		0.95	1.00			0.95	1.00		0.98	
Satd. Flow (prot)		1839		1770	1863			1775	1583		1703	
Flt Permitted		0.44		0.09	1.00			0.95	1.00		0.98	
Satd. Flow (perm)		810		163	1863			1775	1583		1703	
Volume (vph)	25	1333	125	165	965	0	180	2	262	7	3	17
Peak-hour factor, PHF	0.69	0.95	0.92	0.69	0.86	0.25	0.74	0.50	0.82	0.35	0.75	0.75
Adj. Flow (vph)	36	1403	136	239	1122	0	243	4	320	20	4	23
RTOR Reduction (vph)	0	3	0	0	0	0	0	0	0	0	21	0
Lane Group Flow (vph)	0	1572	0	239	1122	0	0	247	320	0	26	0
Turn Type	Perm			pm+pt			Split		Perm	Split		
Protected Phases		6		5	2		4	4		8	8	
Permitted Phases	6			2					4			
Actuated Green, G (s)		39.8		54.4	54.4			14.1	14.1		4.7	
Effective Green, g (s)		42.8		57.4	57.4			17.1	17.1		7.7	
Actuated g/C Ratio		0.47		0.63	0.63			0.19	0.19		0.08	
Clearance Time (s)		6.0		5.5	6.0			6.0	6.0		6.0	
Vehicle Extension (s)		4.0		2.0	4.0			3.0	3.0		3.0	
Lane Grp Cap (vph)		380		307	1173			333	297		144	
v/s Ratio Prot				0.10	c0.60			0.14			c0.02	
v/s Ratio Perm		c1.94		0.39					c0.20			
v/c Ratio		4.14		0.78	0.96			0.74	1.08		0.18	
Uniform Delay, d1		24.2		24.5	15.7			35.0	37.0		38.8	
Progression Factor		1.00		1.00	1.00			1.00	1.00		1.00	
Incremental Delay, d2		1417.6		10.8	16.9			8.6	74.4		0.6	
Delay (s)		1441.8		35.3	32.6			43.6	111.4		39.4	
Level of Service		F		D	C			D	F		D	
Approach Delay (s)		1441.8			33.1			81.9			39.4	
Approach LOS		F			C			F			D	

Intersection Summary			
HCM Average Control Delay	665.9	HCM Level of Service	F
HCM Volume to Capacity ratio	2.63		
Actuated Cycle Length (s)	91.2	Sum of lost time (s)	12.0
Intersection Capacity Utilization	132.9%	ICU Level of Service	H
Analysis Period (min)	15		

c Critical Lane Group

Movement	EBL	EBT	WBT	WBR	SBL	SBR
Lane Configurations						
Ideal Flow (vphpl)	1900	1900	1900	1900	1900	1900
Total Lost time (s)	3.0	3.0	3.0	3.0	3.0	3.0
Lane Util. Factor	0.97	0.95	0.91	0.91	0.97	1.00
Frt	1.00	1.00	0.96	0.85	1.00	0.85
Flt Protected	0.95	1.00	1.00	1.00	0.95	1.00
Satd. Flow (prot)	3433	3539	3259	1441	3433	1583
Flt Permitted	0.95	1.00	1.00	1.00	0.95	1.00
Satd. Flow (perm)	3433	3539	3259	1441	3433	1583
Volume (vph)	943	473	489	729	605	697
Peak-hour factor, PHF	0.89	0.88	0.87	0.95	0.89	0.89
Adj. Flow (vph)	1060	538	562	767	680	783
RTOR Reduction (vph)	0	0	23	1	0	366
Lane Group Flow (vph)	1060	538	734	571	680	417
Turn Type	Prot			pm+ov		Perm
Protected Phases	5	2	6	4	4	
Permitted Phases				6		4
Actuated Green, G (s)	35.7	81.4	38.7	73.6	34.9	34.9
Effective Green, g (s)	39.7	85.4	42.7	82.1	39.4	39.4
Actuated g/C Ratio	0.30	0.65	0.33	0.63	0.30	0.30
Clearance Time (s)	7.0	7.0	7.0	7.5	7.5	7.5
Vehicle Extension (s)	2.0	3.0	3.0	3.0	3.0	3.0
Lane Grp Cap (vph)	1042	2311	1064	938	1034	477
v/s Ratio Prot	c0.31	0.15	c0.23	0.18	0.20	
v/s Ratio Perm				0.21		c0.26
v/c Ratio	1.02	0.23	0.69	0.61	0.66	0.87
Uniform Delay, d1	45.6	9.3	38.3	14.7	39.8	43.3
Progression Factor	1.00	1.00	1.00	1.00	1.00	1.00
Incremental Delay, d2	32.3	0.1	1.9	1.1	1.5	16.1
Delay (s)	77.8	9.3	40.2	15.8	41.3	59.5
Level of Service	E	A	D	B	D	E
Approach Delay (s)		54.8	29.7		51.0	
Approach LOS		D	C		D	

Intersection Summary

HCM Average Control Delay	45.9	HCM Level of Service	D
HCM Volume to Capacity ratio	0.86		
Actuated Cycle Length (s)	130.8	Sum of lost time (s)	9.0
Intersection Capacity Utilization	75.5%	ICU Level of Service	D
Analysis Period (min)	15		

c Critical Lane Group

HCM Signalized Intersection Capacity Analysis
3: Route 7 & Presidential Drive

Kincora
Existing Conditions (2008)

Movement	EBL	EBT	EBR	WBL	WBT	WBR	NBL	NBT	NBR	SBL	SBT	SBR
Lane Configurations												
Ideal Flow (vphpl)	1900	1900	1900	1900	1900	1900	1900	1900	1900	1900	1900	1900
Total Lost time (s)	3.0	3.0	3.0	3.0	3.0	3.0	3.0	3.0	3.0	3.0	3.0	3.0
Lane Util. Factor	1.00	0.91	1.00	0.97	0.91	1.00	1.00	1.00	1.00	0.97	1.00	1.00
Frt	1.00	1.00	0.85	1.00	1.00	0.85	1.00	1.00	0.85	1.00	1.00	0.85
Flt Protected	0.95	1.00	1.00	0.95	1.00	1.00	0.95	1.00	1.00	0.95	1.00	1.00
Satd. Flow (prot)	1770	4940	1583	3433	4940	1583	1770	1863	1583	3433	1863	1583
Flt Permitted	0.95	1.00	1.00	0.95	1.00	1.00	0.95	1.00	1.00	0.95	1.00	1.00
Satd. Flow (perm)	1770	4940	1583	3433	4940	1583	1770	1863	1583	3433	1863	1583
Volume (vph)	42	2914	102	119	3110	7	105	25	154	14	15	55
Peak-hour factor, PHF	0.70	0.93	0.80	0.85	0.93	0.44	0.82	0.89	0.92	0.58	0.54	0.86
Adj. Flow (vph)	60	3133	128	140	3344	16	128	28	167	24	28	64
RTOR Reduction (vph)	0	0	0	0	0	4	0	0	0	0	0	58
Lane Group Flow (vph)	60	3133	128	140	3344	12	128	28	167	24	28	6
Heavy Vehicles (%)	2%	5%	2%	2%	5%	2%	2%	2%	2%	2%	2%	2%
Turn Type	Prot		Free	Prot		Perm	Prot		Free	Prot		Perm
Protected Phases	1	6		5	2		3	8		7	4	
Permitted Phases			Free			2			Free			4
Actuated Green, G (s)	12.0	137.7	200.0	10.0	135.7	135.7	10.0	16.8	200.0	6.0	12.8	12.8
Effective Green, g (s)	16.0	142.2	200.0	14.0	140.2	140.2	14.0	21.8	200.0	10.0	17.8	17.8
Actuated g/C Ratio	0.08	0.71	1.00	0.07	0.70	0.70	0.07	0.11	1.00	0.05	0.09	0.09
Clearance Time (s)	7.0	7.5		7.0	7.5	7.5	7.0	8.0		7.0	8.0	8.0
Vehicle Extension (s)	2.0	3.0		2.0	3.0	3.0	2.0	2.0		2.0	2.0	2.0
Lane Grp Cap (vph)	142	3512	1583	240	3463	1110	124	203	1583	172	166	141
v/s Ratio Prot	0.03	0.63		c0.04	c0.68		c0.07	0.02		0.01	c0.02	
v/s Ratio Perm			0.08			0.01			c0.11			0.00
v/c Ratio	0.42	0.89	0.08	0.58	0.97	0.01	1.03	0.14	0.11	0.14	0.17	0.04
Uniform Delay, d1	87.6	22.8	0.0	90.2	27.7	9.0	93.0	80.6	0.0	90.9	84.3	83.3
Progression Factor	1.00	1.00	1.00	1.00	1.00	1.00	1.02	1.04	1.00	1.00	1.00	1.00
Incremental Delay, d2	0.7	3.9	0.1	2.3	9.2	0.0	89.7	0.1	0.1	0.1	0.2	0.0
Delay (s)	88.3	26.8	0.1	92.5	36.8	9.0	184.1	84.0	0.1	91.0	84.4	83.3
Level of Service	F	C	A	F	D	A	F	F	A	F	F	F
Approach Delay (s)		26.8			38.9			80.3			85.2	
Approach LOS		C			D			F			F	

Intersection Summary				
HCM Average Control Delay	36.0	HCM Level of Service	D	
HCM Volume to Capacity ratio	0.86			
Actuated Cycle Length (s)	200.0	Sum of lost time (s)	12.0	
Intersection Capacity Utilization	86.8%	ICU Level of Service	E	
Analysis Period (min)	15			
c Critical Lane Group				

HCM Unsignalized Intersection Capacity Analysis
11: Smith Switch Road & Loudoun County Pkwy.

Kincora
Existing Conditions (2008)

Movement	EBL	EBR	NBL	NBT	SBT	SBR
Lane Configurations						
Sign Control	Stop			Free	Free	
Grade	0%			0%	0%	
Volume (veh/h)	7	5	11	146	116	2
Peak Hour Factor	0.42	0.50	0.39	0.86	0.84	0.25
Hourly flow rate (vph)	17	10	28	170	138	8
Pedestrians						
Lane Width (ft)						
Walking Speed (ft/s)						
Percent Blockage						
Right turn flare (veh)						
Median type	None					
Median storage veh)						
Upstream signal (ft)						
pX, platoon unblocked						
vC, conflicting volume	368	142	146			
vC1, stage 1 conf vol						
vC2, stage 2 conf vol						
vCu, unblocked vol	368	142	146			
tC, single (s)	6.4	6.2	4.1			
tC, 2 stage (s)						
tF (s)	3.5	3.3	2.2			
p0 queue free %	97	99	98			
cM capacity (veh/h)	619	906	1436			

Direction, Lane #	EB 1	NB 1	SB 1
Volume Total	27	198	146
Volume Left	17	28	0
Volume Right	10	0	8
cSH	703	1436	1700
Volume to Capacity	0.04	0.02	0.09
Queue Length 95th (ft)	3	2	0
Control Delay (s)	10.3	1.2	0.0
Lane LOS	B	A	
Approach Delay (s)	10.3	1.2	0.0
Approach LOS	B		

Intersection Summary			
Average Delay	1.4		
Intersection Capacity Utilization	25.0%	ICU Level of Service	A
Analysis Period (min)	15		

Movement	WBL	WBR	NBT	NBR	SBL	SBT
Lane Configurations						
Ideal Flow (vphpl)	1900	1900	1900	1900	1900	1900
Total Lost time (s)	3.0	3.0	3.0	3.0	3.0	3.0
Lane Util. Factor	0.97	1.00	0.91	1.00	1.00	0.91
Frt	1.00	0.85	1.00	0.85	1.00	1.00
Flt Protected	0.95	1.00	1.00	1.00	0.95	1.00
Satd. Flow (prot)	3433	1583	5085	1583	1770	5085
Flt Permitted	0.95	1.00	1.00	1.00	0.95	1.00
Satd. Flow (perm)	3433	1583	5085	1583	1770	5085
Volume (vph)	398	118	982	541	108	494
Peak-hour factor, PHF	0.67	0.70	0.92	0.87	0.72	0.92
Adj. Flow (vph)	594	169	1067	622	150	537
RTOR Reduction (vph)	0	0	0	0	0	0
Lane Group Flow (vph)	594	169	1067	622	150	537
Turn Type		Free		Free	Prot	
Protected Phases	4		2		1	6
Permitted Phases		Free		Free		
Actuated Green, G (s)	14.5	100.0	51.4	100.0	12.1	70.5
Effective Green, g (s)	19.0	100.0	55.9	100.0	16.1	75.0
Actuated g/C Ratio	0.19	1.00	0.56	1.00	0.16	0.75
Clearance Time (s)	7.5		7.5		7.0	7.5
Vehicle Extension (s)	3.0		6.0		3.0	6.0
Lane Grp Cap (vph)	652	1583	2843	1583	285	3814
v/s Ratio Prot	c0.17		0.21		c0.08	0.11
v/s Ratio Perm		0.11		c0.39		
v/c Ratio	0.91	0.11	0.38	0.39	0.53	0.14
Uniform Delay, d1	39.7	0.0	12.3	0.0	38.5	3.5
Progression Factor	1.00	1.00	1.00	1.00	1.00	1.00
Incremental Delay, d2	17.0	0.1	0.4	0.7	1.8	0.1
Delay (s)	56.7	0.1	12.7	0.7	40.2	3.6
Level of Service	E	A	B	A	D	A
Approach Delay (s)	44.1		8.3			11.6
Approach LOS	D		A			B

Intersection Summary				
HCM Average Control Delay	17.7	HCM Level of Service		B
HCM Volume to Capacity ratio	0.52			
Actuated Cycle Length (s)	100.0	Sum of lost time (s)		6.0
Intersection Capacity Utilization	46.3%	ICU Level of Service		A
Analysis Period (min)	15			
c Critical Lane Group				

Movement	EBL	EBT	EBR	WBL	WBT	WBR	NBL	NBT	NBR	SBL	SBT	SBR
Lane Configurations												
Ideal Flow (vphpl)	1900	1900	1900	1900	1900	1900	1900	1900	1900	1900	1900	1900
Total Lost time (s)	3.0	3.0	3.0	3.0	3.0	3.0	3.0	3.0	3.0	3.0	3.0	3.0
Lane Util. Factor	0.97	0.95	1.00	0.97	0.91	1.00	1.00	0.95	1.00	0.91	0.91	1.00
Frt	1.00	1.00	0.85	1.00	1.00	0.85	1.00	1.00	0.85	1.00	1.00	0.85
Flt Protected	0.95	1.00	1.00	0.95	1.00	1.00	0.95	1.00	1.00	0.95	0.97	1.00
Satd. Flow (prot)	3433	3539	1583	3433	5085	1583	1770	3539	1583	1610	3282	1583
Flt Permitted	0.95	1.00	1.00	0.95	1.00	1.00	0.95	1.00	1.00	0.95	0.97	1.00
Satd. Flow (perm)	3433	3539	1583	3433	5085	1583	1770	3539	1583	1610	3282	1583
Volume (vph)	47	811	21	311	719	221	21	57	281	181	53	39
Peak-hour factor, PHF	0.87	0.98	0.69	0.81	0.90	1.00	0.67	0.88	0.89	0.76	0.85	0.68
Adj. Flow (vph)	54	828	30	384	799	221	31	65	316	238	62	57
RTOR Reduction (vph)	0	0	16	0	0	0	0	0	120	0	0	0
Lane Group Flow (vph)	54	828	14	384	799	221	31	65	196	119	181	57
Turn Type	Prot		Perm	Prot		Free	Split		pm+ov	Split		Free
Protected Phases	5	2		1	6		4	4	1	3	3	
Permitted Phases			2			Free			4			Free
Actuated Green, G (s)	8.7	88.7	88.7	36.6	116.6	200.0	20.3	20.3	56.9	25.4	25.4	200.0
Effective Green, g (s)	12.7	93.2	93.2	40.6	121.1	200.0	24.8	24.8	65.4	29.4	29.4	200.0
Actuated g/C Ratio	0.06	0.47	0.47	0.20	0.61	1.00	0.12	0.12	0.33	0.15	0.15	1.00
Clearance Time (s)	7.0	7.5	7.5	7.0	7.5		7.5	7.5	7.0	7.0	7.0	
Vehicle Extension (s)	3.0	4.0	4.0	3.0	4.0		3.0	3.0	3.0	3.0	3.0	
Lane Grp Cap (vph)	218	1649	738	697	3079	1583	219	439	541	237	482	1583
v/s Ratio Prot	0.02	c0.23		c0.11	0.16		0.02	0.02	c0.07	c0.07	0.06	
v/s Ratio Perm			0.01			0.14			0.05			0.04
v/c Ratio	0.25	0.50	0.02	0.55	0.26	0.14	0.14	0.15	0.36	0.50	0.38	0.04
Uniform Delay, d1	89.1	37.2	28.8	71.5	18.5	0.0	78.1	78.2	51.4	78.6	77.0	0.0
Progression Factor	1.00	1.00	1.00	1.00	1.00	1.00	1.00	1.00	1.00	0.81	0.81	1.00
Incremental Delay, d2	0.6	1.1	0.0	0.9	0.2	0.2	0.3	0.2	0.4	1.7	0.5	0.0
Delay (s)	89.7	38.3	28.8	72.5	18.7	0.2	78.4	78.3	51.8	65.6	62.6	0.0
Level of Service	F	D	C	E	B	A	E	E	D	E	E	A
Approach Delay (s)		41.1			30.5			58.0			53.6	
Approach LOS		D			C			E			D	

Intersection Summary				
HCM Average Control Delay	40.0	HCM Level of Service		D
HCM Volume to Capacity ratio	0.50			
Actuated Cycle Length (s)	200.0	Sum of lost time (s)		12.0
Intersection Capacity Utilization	55.7%	ICU Level of Service		B
Analysis Period (min)	15			
c Critical Lane Group				

Movement	EBL	EBT	EBR	WBL	WBT	WBR	NBL	NBT	NBR	SBL	SBT	SBR
Lane Configurations												
Ideal Flow (vphpl)	1900	1900	1900	1900	1900	1900	1900	1900	1900	1900	1900	1900
Total Lost time (s)	3.0	3.0	3.0	3.0	3.0	3.0	3.0	3.0	3.0	3.0	3.0	3.0
Lane Util. Factor	0.97	0.91	1.00	0.97	0.86	1.00	0.91	0.86	0.91	0.91	0.91	1.00
Frt	1.00	1.00	0.85	1.00	1.00	0.85	1.00	1.00	0.85	1.00	1.00	0.85
Flt Protected	0.95	1.00	1.00	0.95	1.00	1.00	0.95	1.00	1.00	0.95	0.96	1.00
Satd. Flow (prot)	3433	5085	1583	3433	6408	1583	1610	3204	1441	1610	3250	1583
Flt Permitted	0.95	1.00	1.00	0.95	1.00	1.00	0.95	1.00	1.00	0.95	0.96	1.00
Satd. Flow (perm)	3433	5085	1583	3433	6408	1583	1610	3204	1441	1610	3250	1583
Volume (vph)	450	1438	4	15	1082	846	9	49	34	673	41	601
Peak-hour factor, PHF	0.87	0.90	0.33	0.63	0.92	0.97	0.56	0.82	0.77	0.89	0.68	0.85
Adj. Flow (vph)	517	1598	12	24	1176	872	16	60	44	756	60	707
RTOR Reduction (vph)	0	0	5	0	0	0	0	0	18	0	0	0
Lane Group Flow (vph)	517	1598	7	24	1176	872	16	60	26	378	438	707
Turn Type	Prot		Perm	Prot		Free	Split		pm+ov	Split		Free
Protected Phases	1	6		5	2		4	4	5	3	3	
Permitted Phases			6			Free			4			Free
Actuated Green, G (s)	16.5	90.2	90.2	3.8	77.5	170.0	8.5	8.5	12.3	39.5	39.5	170.0
Effective Green, g (s)	20.5	94.2	94.2	7.8	81.5	170.0	12.5	12.5	20.3	43.5	43.5	170.0
Actuated g/C Ratio	0.12	0.55	0.55	0.05	0.48	1.00	0.07	0.07	0.12	0.26	0.26	1.00
Clearance Time (s)	7.0	7.0	7.0	7.0	7.0		7.0	7.0	7.0	7.0	7.0	
Vehicle Extension (s)	2.0	3.0	3.0	2.0	3.0		3.0	3.0	2.0	3.0	3.0	
Lane Grp Cap (vph)	414	2818	877	158	3072	1583	118	236	198	412	832	1583
v/s Ratio Prot	c0.15	c0.31		0.01	0.18		0.01	0.02	0.01	c0.23	0.13	
v/s Ratio Perm			0.00			c0.55			0.01			0.45
v/c Ratio	1.25	0.57	0.01	0.15	0.38	0.55	0.14	0.25	0.13	0.92	0.88dl	0.45
Uniform Delay, d1	74.8	24.6	17.0	77.9	28.2	0.0	73.7	74.3	67.0	61.5	54.4	0.0
Progression Factor	1.00	1.00	1.00	1.00	1.00	1.00	1.00	1.00	1.00	1.00	1.00	1.00
Incremental Delay, d2	130.7	0.8	0.0	0.2	0.4	1.4	0.5	0.6	0.1	24.9	0.6	0.9
Delay (s)	205.4	25.5	17.0	78.1	28.6	1.4	74.2	74.9	67.1	86.4	55.0	0.9
Level of Service	F	C	B	E	C	A	E	E	E	F	D	A
Approach Delay (s)		69.2			17.7			72.0			37.7	
Approach LOS		E			B			E			D	

Intersection Summary

HCM Average Control Delay	42.8	HCM Level of Service	D
HCM Volume to Capacity ratio	0.74		
Actuated Cycle Length (s)	170.0	Sum of lost time (s)	6.0
Intersection Capacity Utilization	67.3%	ICU Level of Service	C
Analysis Period (min)	15		

dl Defacto Left Lane. Recode with 1 though lane as a left lane.
c Critical Lane Group

HCM Signalized Intersection Capacity Analysis
1: Route 7 & Janelia Farm Blvd.

Kincora
Existing Conditions (2008)

Movement	EBL	EBT	EBR	WBL	WBT	WBR	NBL	NBT	NBR	SBL	SBT	SBR
Lane Configurations												
Ideal Flow (vphpl)	1900	1900	1900	1900	1900	1900	1900	1900	1900	1900	1900	1900
Total Lost time (s)	3.0	3.0	3.0	3.0	3.0	3.0	3.0	3.0	3.0	3.0	3.0	
Lane Util. Factor	0.97	0.86	1.00	0.97	0.86	1.00	0.97	1.00	1.00	0.97	0.95	
Frt	1.00	1.00	0.85	1.00	1.00	0.85	1.00	1.00	0.85	1.00	1.00	
Flt Protected	0.95	1.00	1.00	0.95	1.00	1.00	0.95	1.00	1.00	0.95	1.00	
Satd. Flow (prot)	3433	6225	1583	3433	6225	1583	3433	1863	1583	3433	3522	
Flt Permitted	0.95	1.00	1.00	0.95	1.00	1.00	0.95	1.00	1.00	0.95	1.00	
Satd. Flow (perm)	3433	6225	1583	3433	6225	1583	3433	1863	1583	3433	3522	
Volume (vph)	15	2504	116	181	1555	302	136	67	262	660	211	3
Peak-hour factor, PHF	0.75	0.95	0.81	0.79	0.93	0.81	0.81	0.70	0.86	0.83	0.89	0.38
Adj. Flow (vph)	20	2636	143	229	1672	373	168	96	305	795	237	8
RTOR Reduction (vph)	0	0	0	0	0	63	0	0	3	0	1	0
Lane Group Flow (vph)	20	2636	143	229	1672	310	168	96	302	795	244	0
Heavy Vehicles (%)	2%	5%	2%	2%	5%	2%	2%	2%	2%	2%	2%	2%
Turn Type	Prot		Free	Prot		pm+ov	Prot		pm+ov	Prot		
Protected Phases	1	6		5	2	3	7	4	5	3	8	
Permitted Phases			Free			2			4			
Actuated Green, G (s)	3.8	115.0	200.0	9.1	120.3	158.3	10.8	9.9	19.0	38.0	37.1	
Effective Green, g (s)	7.8	119.0	200.0	13.1	124.3	166.3	14.8	13.9	27.0	42.0	41.1	
Actuated g/C Ratio	0.04	0.60	1.00	0.07	0.62	0.83	0.07	0.07	0.14	0.21	0.21	
Clearance Time (s)	7.0	7.0		7.0	7.0	7.0	7.0	7.0	7.0	7.0	7.0	
Vehicle Extension (s)	2.0	3.0		2.0	3.0	3.0	2.0	2.0	2.0	3.0	3.0	
Lane Grp Cap (vph)	134	3704	1583	225	3869	1340	254	129	237	721	724	
v/s Ratio Prot	0.01	c0.42		0.07	0.27	0.05	0.05	0.05	c0.08	c0.23	0.07	
v/s Ratio Perm			0.09			0.15			0.11			
v/c Ratio	0.15	0.71	0.09	1.02	0.43	0.23	0.66	0.74	1.28	1.10	0.34	
Uniform Delay, d1	92.9	28.4	0.0	93.5	19.6	3.5	90.2	91.3	86.5	79.0	67.8	
Progression Factor	1.00	1.00	1.00	0.87	0.44	9.05	1.00	1.00	1.00	1.00	1.00	
Incremental Delay, d2	0.2	1.2	0.1	61.1	0.3	0.1	4.9	18.2	152.7	65.2	0.3	
Delay (s)	93.1	29.6	0.1	142.1	8.8	31.9	95.1	109.5	239.2	144.2	68.1	
Level of Service	F	C	A	F	A	C	F	F	F	F	E	
Approach Delay (s)		28.6			26.0			174.8			126.3	
Approach LOS		C			C			F			F	

Intersection Summary			
HCM Average Control Delay	55.4	HCM Level of Service	E
HCM Volume to Capacity ratio	0.89		
Actuated Cycle Length (s)	200.0	Sum of lost time (s)	9.0
Intersection Capacity Utilization	81.3%	ICU Level of Service	D
Analysis Period (min)	15		

c Critical Lane Group

HCM Signalized Intersection Capacity Analysis
2: Route 7 & Smith Circle

Kincora
Existing Conditions (2008)

Movement	EBL	EBT	EBR	WBL	WBT	WBR	NBL	NBT	NBR	SBL	SBT	SBR
Lane Configurations												
Ideal Flow (vphpl)	1900	1900	1900	1900	1900	1900	1900	1900	1900	1900	1900	1900
Total Lost time (s)	3.0	3.0	3.0	3.0	3.0	3.0		3.0	3.0		3.0	
Lane Util. Factor	1.00	0.86	1.00	0.97	0.86	1.00		0.95	1.00		1.00	
Frt	1.00	1.00	0.85	1.00	1.00	0.85		1.00	0.85		0.98	
Flt Protected	0.95	1.00	1.00	0.95	1.00	1.00		1.00	1.00		0.97	
Satd. Flow (prot)	1770	6225	1583	3433	6225	1583		1770	1583		1762	
Flt Permitted	0.95	1.00	1.00	0.95	1.00	1.00		1.00	1.00		0.97	
Satd. Flow (perm)	1770	6225	1583	3433	6225	1583		1770	1583		1762	
Volume (vph)	41	3373	12	143	2033	2	0	161	932	13	7	5
Peak-hour factor, PHF	0.31	0.92	0.75	0.95	0.92	0.50	0.25	0.44	0.70	0.41	0.88	0.63
Adj. Flow (vph)	132	3666	16	151	2210	4	0	366	1331	32	8	8
RTOR Reduction (vph)	0	0	2	0	0	1	0	0	0	0	4	0
Lane Group Flow (vph)	132	3666	14	151	2210	3	0	366	1331	0	44	0
Heavy Vehicles (%)	2%	5%	2%	2%	5%	2%	2%	2%	2%	2%	2%	2%
Turn Type	Prot		pm+ov	Prot		pm+ov	Split		Free	Split		
Protected Phases	1	6	4	5	2	3	4	4		3	3	
Permitted Phases			6			2			Free			
Actuated Green, G (s)	10.0	144.1	160.6	2.0	136.1	145.0		16.5	200.0		8.9	
Effective Green, g (s)	14.0	148.6	169.1	6.0	140.6	153.5		20.5	200.0		12.9	
Actuated g/C Ratio	0.07	0.74	0.85	0.03	0.70	0.77		0.10	1.00		0.06	
Clearance Time (s)	7.0	7.5	7.0	7.0	7.5	7.0		7.0			7.0	
Vehicle Extension (s)	3.0	3.0	3.0	3.0	3.0	3.0		3.0			3.0	
Lane Grp Cap (vph)	124	4625	1338	103	4376	1239		181	1583		114	
v/s Ratio Prot	c0.07	0.59	0.00	c0.04	0.36	0.00		c0.21			0.03	
v/s Ratio Perm			0.01			0.00			c0.84			
v/c Ratio	1.06	0.79	0.01	1.47	0.51	0.00		2.02	0.84		0.39	
Uniform Delay, d1	93.0	16.1	2.4	97.0	13.7	5.4		89.8	0.0		89.8	
Progression Factor	1.14	0.93	0.68	0.73	1.83	2.95		1.00	1.00		1.00	
Incremental Delay, d2	77.4	0.8	0.0	248.7	0.4	0.0		478.8	5.6		2.2	
Delay (s)	183.4	15.8	2.1	319.7	25.3	16.0		568.6	5.6		92.0	
Level of Service	F	B	A	F	C	B		F	A		F	
Approach Delay (s)		21.5			44.1			127.0			92.0	
Approach LOS		C			D			F			F	

Intersection Summary			
HCM Average Control Delay	51.3	HCM Level of Service	D
HCM Volume to Capacity ratio	0.99		
Actuated Cycle Length (s)	200.0	Sum of lost time (s)	6.0
Intersection Capacity Utilization	75.6%	ICU Level of Service	D
Analysis Period (min)	15		

c Critical Lane Group

Movement	EBL	EBT	EBR	WBL	WBT	WBR	NBL	NBT	NBR	SBL	SBT	SBR
Lane Configurations												
Ideal Flow (vphpl)	1900	1900	1900	1900	1900	1900	1900	1900	1900	1900	1900	1900
Total Lost time (s)	3.0	3.0	3.0	3.0	3.0	3.0	3.0	3.0	3.0	3.0	3.0	3.0
Lane Util. Factor	1.00	0.86	1.00	0.97	0.86	1.00	1.00	1.00	1.00	0.97	1.00	1.00
Frt	1.00	1.00	0.85	1.00	1.00	0.85	1.00	1.00	0.85	1.00	1.00	0.85
Flt Protected	0.95	1.00	1.00	0.95	1.00	1.00	0.95	1.00	1.00	0.95	1.00	1.00
Satd. Flow (prot)	1770	6225	1583	3433	6225	1583	1770	1863	1583	3433	1863	1583
Flt Permitted	0.95	1.00	1.00	0.95	1.00	1.00	0.95	1.00	1.00	0.95	1.00	1.00
Satd. Flow (perm)	1770	6225	1583	3433	6225	1583	1770	1863	1583	3433	1863	1583
Volume (vph)	163	3363	292	96	1991	11	79	83	253	19	47	108
Peak-hour factor, PHF	0.72	0.85	0.43	0.75	0.94	0.69	0.86	0.61	0.90	0.59	0.73	0.96
Adj. Flow (vph)	226	4545	679	128	2118	16	92	136	281	32	64	112
RTOR Reduction (vph)	0	0	0	0	0	7	0	0	0	0	0	32
Lane Group Flow (vph)	226	4545	679	128	2118	9	92	136	281	32	64	80
Heavy Vehicles (%)	2%	5%	2%	2%	5%	2%	2%	2%	2%	2%	2%	2%
Turn Type	Prot		Free	Prot		Perm	Prot		Free	Prot		pm+ov
Protected Phases	1	6		5	2		3	8		7	4	1
Permitted Phases			Free			2			Free			4
Actuated Green, G (s)	28.9	131.7	200.0	10.5	113.3	113.3	13.4	18.3	200.0	10.0	14.9	43.8
Effective Green, g (s)	32.9	136.2	200.0	14.5	117.8	117.8	17.4	23.3	200.0	14.0	19.9	52.8
Actuated g/C Ratio	0.16	0.68	1.00	0.07	0.59	0.59	0.09	0.12	1.00	0.07	0.10	0.26
Clearance Time (s)	7.0	7.5		7.0	7.5	7.5	7.0	8.0		7.0	8.0	7.0
Vehicle Extension (s)	2.0	3.0		2.0	3.0	3.0	2.0	2.0		2.0	2.0	2.0
Lane Grp Cap (vph)	291	4239	1583	249	3667	932	154	217	1583	240	185	442
v/s Ratio Prot	c0.13	c0.73		0.04	0.34		c0.05	c0.07		0.01	0.03	0.03
v/s Ratio Perm			0.43			0.01			0.18			0.02
v/c Ratio	0.78	1.07	0.43	0.51	0.58	0.01	0.60	0.63	0.18	0.13	0.35	0.18
Uniform Delay, d1	80.0	31.9	0.0	89.4	25.6	17.0	87.9	84.2	0.0	87.3	84.0	56.9
Progression Factor	1.14	0.74	1.00	0.89	0.85	0.91	1.00	1.00	1.00	1.00	1.00	1.00
Incremental Delay, d2	7.6	36.2	0.6	0.7	0.6	0.0	4.1	4.0	0.2	0.1	0.4	0.1
Delay (s)	98.8	60.0	0.6	80.4	22.4	15.5	92.0	88.2	0.2	87.4	84.4	56.9
Level of Service	F	E	A	F	C	B	F	F	A	F	F	E
Approach Delay (s)		54.2			25.6			40.3			70.1	
Approach LOS		D			C			D			E	

Intersection Summary

HCM Average Control Delay	46.1	HCM Level of Service	D
HCM Volume to Capacity ratio	0.95		
Actuated Cycle Length (s)	200.0	Sum of lost time (s)	9.0
Intersection Capacity Utilization	85.4%	ICU Level of Service	E
Analysis Period (min)	15		

c Critical Lane Group

Movement	EBL	EBT	EBR	WBL	WBT	WBR	NBL	NBT	NBR	SBL	SBT	SBR
Lane Configurations												
Ideal Flow (vphpl)	1900	1900	1900	1900	1900	1900	1900	1900	1900	1900	1900	1900
Total Lost time (s)	3.0	3.0	3.0	3.0	3.0	3.0	3.0	3.0		3.0	3.0	
Lane Util. Factor	0.97	0.86	1.00	1.00	0.86	1.00	1.00	1.00		0.97	1.00	
Frt	1.00	1.00	0.85	1.00	1.00	0.85	1.00	0.90		1.00	0.90	
Flt Protected	0.95	1.00	1.00	0.95	1.00	1.00	0.95	1.00		0.95	1.00	
Satd. Flow (prot)	3433	6225	1583	1770	6225	1583	1770	1676		3433	1676	
Flt Permitted	0.95	1.00	1.00	0.95	1.00	1.00	0.95	1.00		0.95	1.00	
Satd. Flow (perm)	3433	6225	1583	1770	6225	1583	1770	1676		3433	1676	
Volume (vph)	40	4061	34	49	2085	249	4	1	4	442	3	9
Peak-hour factor, PHF	0.55	0.95	0.53	0.72	0.99	0.98	0.50	0.25	0.50	0.89	0.38	0.56
Adj. Flow (vph)	73	4275	64	68	2106	259	8	4	8	497	8	16
RTOR Reduction (vph)	0	0	16	0	0	41	0	8	0	0	14	0
Lane Group Flow (vph)	73	4275	48	68	2106	218	8	4	0	497	10	0
Heavy Vehicles (%)	2%	5%	2%	2%	5%	2%	2%	2%	2%	2%	2%	2%
Turn Type	Prot		pm+ov	Prot		pm+ov	Split			Split		
Protected Phases	1	6	3	5	2	4	3	3		4	4	
Permitted Phases			6			2						
Actuated Green, G (s)	10.0	139.8	141.6	12.4	142.0	159.0	2.0	2.0		17.0	17.0	
Effective Green, g (s)	14.0	144.6	150.6	16.4	147.0	168.0	6.0	8.0		21.0	21.0	
Actuated g/C Ratio	0.07	0.72	0.75	0.08	0.74	0.84	0.03	0.03		0.10	0.10	
Clearance Time (s)	7.0	8.0	7.0	7.0	8.0	7.0	7.0	7.0		7.0	7.0	
Vehicle Extension (s)	3.0	3.0	3.0	3.0	3.0	3.0	3.0	3.0		3.0	3.0	
Lane Grp Cap (vph)	240	4501	1216	145	4575	1330	53	50		360	176	
v/s Ratio Prot	0.02	c0.69	0.00	c0.04	0.34	0.02	c0.00	0.00		c0.14	0.01	
v/s Ratio Perm			0.03			0.12						
v/c Ratio	0.30	0.95	0.04	0.47	0.46	0.16	0.15	0.08		1.38	0.06	
Uniform Delay, d1	88.4	24.5	6.3	87.6	10.6	3.0	94.5	94.3		89.5	80.6	
Progression Factor	1.18	0.13	0.00	1.00	1.00	1.00	1.00	1.00		1.00	1.00	
Incremental Delay, d2	0.1	0.7	0.0	2.4	0.3	0.1	1.3	0.7		187.8	0.1	
Delay (s)	104.0	3.8	0.0	90.0	10.9	3.0	95.8	95.1		277.3	80.7	
Level of Service	F	A	A	F	B	A	F	F		F	F	
Approach Delay (s)		5.4			12.3			95.4			268.2	
Approach LOS		A			B			F			F	

Intersection Summary

HCM Average Control Delay	26.5	HCM Level of Service	C
HCM Volume to Capacity ratio	0.93		
Actuated Cycle Length (s)	200.0	Sum of lost time (s)	12.0
Intersection Capacity Utilization	84.8%	ICU Level of Service	E
Analysis Period (min)	15		

c Critical Lane Group

Movement	EBL	EBT	EBR	WBL	WBT	WBR	NBL	NBT	NBR	SBL	SBT	SBR
Lane Configurations												
Ideal Flow (vphpl)	1900	1900	1900	1900	1900	1900	1900	1900	1900	1900	1900	1900
Total Lost time (s)	3.0	3.0	3.0	3.0	3.0	3.0	3.0	3.0	3.0	3.0	3.0	3.0
Lane Util. Factor	0.97	0.86	1.00	0.97	0.86	1.00	0.97	0.95	1.00	0.97	0.95	1.00
Frt	1.00	1.00	0.85	1.00	1.00	0.85	1.00	1.00	0.85	1.00	1.00	0.85
Flt Protected	0.95	1.00	1.00	0.95	1.00	1.00	0.95	1.00	1.00	0.95	1.00	1.00
Satd. Flow (prot)	3433	6408	1583	3433	6408	1583	3433	3539	1583	3433	3539	1583
Flt Permitted	0.95	1.00	1.00	0.95	1.00	1.00	0.95	1.00	1.00	0.95	1.00	1.00
Satd. Flow (perm)	3433	6408	1583	3433	6408	1583	3433	3539	1583	3433	3539	1583
Volume (vph)	287	2801	53	70	1218	100	63	70	140	165	94	240
Peak-hour factor, PHF	0.79	0.95	0.74	0.76	0.84	0.73	0.63	0.70	0.92	0.84	0.53	0.70
Adj. Flow (vph)	363	2948	72	92	1450	137	100	100	152	196	177	343
RTOR Reduction (vph)	0	0	0	0	0	50	0	0	0	0	0	45
Lane Group Flow (vph)	363	2948	72	92	1450	87	100	100	152	196	177	298
Turn Type	Prot		Free	Prot		pm+ov	Prot		Free	Prot		pm+ov
Protected Phases	1	6		5	2	3	7	4		3	8	1
Permitted Phases			Free			2			Free			8
Actuated Green, G (s)	17.4	82.0	150.0	9.5	74.1	86.8	8.8	17.8	150.0	12.7	21.7	39.1
Effective Green, g (s)	21.4	86.0	150.0	13.5	78.1	94.8	12.8	21.8	150.0	16.7	25.7	47.1
Actuated g/C Ratio	0.14	0.57	1.00	0.09	0.52	0.63	0.09	0.15	1.00	0.11	0.17	0.31
Clearance Time (s)	7.0	7.0		7.0	7.0	7.0	7.0	7.0		7.0	7.0	7.0
Vehicle Extension (s)	2.0	2.0		3.0	2.0	2.0	2.0	2.0		2.0	2.0	2.0
Lane Grp Cap (vph)	490	3674	1583	309	3336	1032	293	514	1583	382	606	529
v/s Ratio Prot	c0.11	c0.46		0.03	0.23	0.01	0.03	0.03		c0.06	0.05	c0.08
v/s Ratio Perm			0.05			0.05			0.10			0.11
v/c Ratio	0.74	0.80	0.05	0.30	0.43	0.08	0.34	0.19	0.10	0.51	0.29	0.56
Uniform Delay, d1	61.6	25.3	0.0	63.8	22.3	10.7	64.6	56.4	0.0	62.8	54.2	42.9
Progression Factor	1.00	1.00	1.00	0.97	0.82	0.47	1.00	1.00	1.00	1.00	1.00	1.00
Incremental Delay, d2	5.2	1.9	0.1	0.5	0.4	0.0	0.3	0.1	0.1	0.5	0.1	0.8
Delay (s)	66.9	27.2	0.1	62.4	18.7	5.0	64.9	56.4	0.1	63.3	54.3	43.7
Level of Service	E	C	A	E	B	A	E	E	A	E	D	D
Approach Delay (s)		30.9			20.0			34.5			51.7	
Approach LOS		C			B			C			D	

Intersection Summary			
HCM Average Control Delay	30.5	HCM Level of Service	C
HCM Volume to Capacity ratio	0.72		
Actuated Cycle Length (s)	150.0	Sum of lost time (s)	6.0
Intersection Capacity Utilization	67.0%	ICU Level of Service	C
Analysis Period (min)	15		

c Critical Lane Group

Movement	EBL	EBT	EBR	WBL	WBT	WBR	NBL	NBT	NBR	SBL	SBT	SBR
Lane Configurations												
Ideal Flow (vphpl)	1900	1900	1900	1900	1900	1900	1900	1900	1900	1900	1900	1900
Total Lost time (s)	3.0	3.0	3.0	3.0	3.0	3.0	3.0	3.0	3.0	3.0	3.0	3.0
Lane Util. Factor	0.97	0.86	1.00	1.00	0.86	1.00	0.97	1.00	1.00	0.97	1.00	1.00
Frt	1.00	1.00	0.85	1.00	1.00	0.85	1.00	1.00	0.85	1.00	1.00	0.85
Flt Protected	0.95	1.00	1.00	0.95	1.00	1.00	0.95	1.00	1.00	0.95	1.00	1.00
Satd. Flow (prot)	3433	6408	1583	1770	6408	1583	3433	1883	1583	3433	1863	1583
Flt Permitted	0.95	1.00	1.00	0.95	1.00	1.00	0.95	1.00	1.00	0.95	1.00	1.00
Satd. Flow (perm)	3433	6408	1583	1770	6408	1583	3433	1863	1583	3433	1863	1583
Volume (vph)	174	2523	409	123	1122	73	58	34	42	131	82	208
Peak-hour factor, PHF	0.84	0.95	0.93	0.72	0.94	0.79	0.73	0.65	0.70	0.84	0.71	0.88
Adj. Flow (vph)	207	2656	440	171	1194	92	79	52	60	156	115	236
RTOR Reduction (vph)	0	0	0	0	0	0	0	0	20	0	0	107
Lane Group Flow (vph)	207	2656	440	171	1194	92	79	52	41	156	115	129
Turn Type	Prot		Free	Prot		Free	Split		pm+ov	Split		pm+ov
Protected Phases	1	6		5	2		4	4	5	3	3	1
Permitted Phases			Free			Free			4			3
Actuated Green, G (s)	9.7	84.9	150.0	15.3	90.5	150.0	9.7	9.7	25.0	12.1	12.1	21.8
Effective Green, g (s)	13.7	88.9	150.0	19.3	94.5	150.0	13.7	13.7	33.0	16.1	16.1	29.8
Actuated g/C Ratio	0.09	0.59	1.00	0.13	0.63	1.00	0.09	0.09	0.22	0.11	0.11	0.20
Clearance Time (s)	7.0	7.0		7.0	7.0		7.0	7.0	7.0	7.0	7.0	7.0
Vehicle Extension (s)	2.0	4.0		2.0	4.0		3.0	3.0	2.0	3.0	3.0	2.0
Lane Grp Cap (vph)	314	3798	1583	228	4037	1583	314	170	380	368	200	314
v/s Ratio Prot	0.06	c0.41		c0.10	0.19		0.02	0.03	0.01	0.05	c0.06	0.04
v/s Ratio Perm			c0.28			0.06			0.01			0.04
v/c Ratio	0.66	0.70	0.28	0.75	0.30	0.06	0.25	0.31	0.11	0.42	0.57	0.41
Uniform Delay, d1	65.9	21.3	0.0	63.0	12.6	0.0	63.4	63.7	46.7	62.6	63.7	52.4
Progression Factor	1.26	0.34	1.00	1.00	1.00	1.00	1.00	1.00	1.00	1.00	1.00	1.00
Incremental Delay, d2	2.4	0.7	0.3	11.6	0.2	0.1	0.4	1.0	0.0	0.8	4.0	0.3
Delay (s)	85.3	7.8	0.3	74.6	12.8	0.1	63.8	64.7	46.8	63.4	67.7	52.7
Level of Service	F	A	A	E	B	A	E	E	D	E	E	D
Approach Delay (s)		11.7			19.3			58.7			59.4	
Approach LOS		B			B			E			E	

Intersection Summary			
HCM Average Control Delay	19.8	HCM Level of Service	B
HCM Volume to Capacity ratio	0.64		
Actuated Cycle Length (s)	150.0	Sum of lost time (s)	9.0
Intersection Capacity Utilization	63.8%	ICU Level of Service	B
Analysis Period (min)	15		

c Critical Lane Group

HCM Signalized Intersection Capacity Analysis
7: Countryside Blvd. & Algonkian Parkway

Kincora
Existing Conditions (2008)

Movement	WBL	WBR	NBT	NBR	SBL	SBT
Lane Configurations						
Ideal Flow (vphpl)	1900	1900	1900	1900	1900	1900
Total Lost time (s)	3.0	3.0	3.0		3.0	3.0
Lane Util. Factor	1.00	1.00	0.95		1.00	0.95
Frt	1.00	0.85	0.97		1.00	1.00
Flt Protected	0.95	1.00	1.00		0.95	1.00
Satd. Flow (prot)	1770	1583	3420		1770	3539
Flt Permitted	0.95	1.00	1.00		0.40	1.00
Satd. Flow (perm)	1770	1583	3420		736	3539
Volume (vph)	89	191	300	70	159	544
Peak-hour factor, PHF	0.59	0.76	0.87	0.70	0.80	0.90
Adj. Flow (vph)	151	251	345	100	199	604
RTOR Reduction (vph)	0	141	24	0	0	0
Lane Group Flow (vph)	151	110	421	0	199	604
Turn Type		pm+ov			pm+pt	
Protected Phases	4	1	2		1	6
Permitted Phases		4			6	
Actuated Green, G (s)	7.6	15.5	16.7		31.6	31.6
Effective Green, g (s)	11.6	23.5	21.2		36.1	36.1
Actuated g/C Ratio	0.22	0.44	0.39		0.67	0.67
Clearance Time (s)	7.0	7.0	7.5		7.0	7.5
Vehicle Extension (s)	2.0	2.0	2.0		2.0	2.0
Lane Grp Cap (vph)	382	781	1350		724	2379
v/s Ratio Prot	c0.09	0.03	c0.12		c0.06	0.17
v/s Ratio Perm		0.04			0.12	
v/c Ratio	0.40	0.14	0.31		0.27	0.25
Uniform Delay, d1	18.0	9.0	11.2		3.5	3.5
Progression Factor	1.00	1.00	1.00		1.00	1.00
Incremental Delay, d2	0.2	0.0	0.0		0.1	0.0
Delay (s)	18.3	9.1	11.3		3.6	3.5
Level of Service	B	A	B		A	A
Approach Delay (s)	12.5		11.3			3.5
Approach LOS	B		B			A

Intersection Summary

HCM Average Control Delay	7.8	HCM Level of Service	A
HCM Volume to Capacity ratio	0.32		
Actuated Cycle Length (s)	53.7	Sum of lost time (s)	9.0
Intersection Capacity Utilization	37.1%	ICU Level of Service	A
Analysis Period (min)	15		

c Critical Lane Group

HCM Signalized Intersection Capacity Analysis
8: Winding Road & Algonkian Parkway

Kincora
Existing Conditions (2008)

Movement	EBL	EBT	EBR	WBL	WBT	WBR	NBL	NBT	NBR	SBL	SBT	SBR
Lane Configurations												
Ideal Flow (vphpl)	1900	1900	1900	1900	1900	1900	1900	1900	1900	1900	1900	1900
Total Lost time (s)		4.0	4.0		4.0	4.0	4.0	4.0	4.0	4.0	4.0	4.0
Lane Util. Factor		1.00	1.00		1.00	1.00	1.00	0.95	1.00	1.00	0.95	1.00
Frt		1.00	0.85		1.00	0.85	1.00	1.00	0.85	1.00	1.00	0.85
Flt Protected		0.96	1.00		0.96	1.00	0.95	1.00	1.00	0.95	1.00	1.00
Satd. Flow (prot)		1781	1583		1792	1583	1770	3539	1583	1770	3539	1583
Flt Permitted		0.68	1.00		0.74	1.00	0.34	1.00	1.00	0.55	1.00	1.00
Satd. Flow (perm)		1223	1583		1370	1583	627	3539	1583	1021	3539	1583
Volume (vph)	41	2	145	71	9	38	35	267	15	9	678	39
Peak-hour factor, PHF	0.85	0.50	0.88	0.93	0.45	0.86	0.73	0.79	0.54	0.75	0.94	0.54
Adj. Flow (vph)	48	4	165	76	20	44	48	338	28	12	721	72
RTOR Reduction (vph)	0	0	141	0	0	38	0	0	9	0	0	25
Lane Group Flow (vph)	0	52	24	0	96	6	48	338	19	12	721	47
Turn Type	Perm		Perm	Perm		Perm	pm+pt		Perm	pm+pt		Perm
Protected Phases		4			8		5	2		1	6	
Permitted Phases	4		4	8		8	2		2	6		6
Actuated Green, G (s)		9.9	9.9		9.9	9.9	61.4	58.1	58.1	56.8	55.8	55.8
Effective Green, g (s)		12.9	12.9		12.9	12.9	67.4	61.1	61.1	62.8	58.8	58.8
Actuated g/C Ratio		0.14	0.14		0.14	0.14	0.75	0.68	0.68	0.70	0.65	0.65
Clearance Time (s)		7.0	7.0		7.0	7.0	7.0	7.0	7.0	7.0	7.0	7.0
Vehicle Extension (s)		2.0	2.0		2.0	2.0	2.0	2.0	2.0	2.0	2.0	2.0
Lane Grp Cap (vph)		175	227		196	227	550	2403	1075	746	2312	1034
v/s Ratio Prot							c0.01	0.10		0.00	c0.20	
v/s Ratio Perm		0.04	0.01		c0.07	0.00	0.06		0.01	0.01		0.03
v/c Ratio		0.30	0.10		0.49	0.03	0.09	0.14	0.02	0.02	0.31	0.05
Uniform Delay, d1		34.5	33.5		35.5	33.2	3.2	5.1	4.7	4.1	6.8	5.6
Progression Factor		1.00	1.00		1.00	1.00	1.00	1.00	1.00	1.00	1.00	1.00
Incremental Delay, d2		0.3	0.1		0.7	0.0	0.0	0.1	0.0	0.0	0.4	0.1
Delay (s)		34.8	33.6		36.2	33.2	3.2	5.3	4.7	4.1	7.1	5.7
Level of Service		C	C		D	C	A	A	A	A	A	A
Approach Delay (s)		33.9			35.3			5.0			7.0	
Approach LOS		C			D			A			A	

Intersection Summary

HCM Average Control Delay	12.7	HCM Level of Service	B
HCM Volume to Capacity ratio	0.34		
Actuated Cycle Length (s)	90.0	Sum of lost time (s)	16.0
Intersection Capacity Utilization	43.1%	ICU Level of Service	A
Analysis Period (min)	15		

c Critical Lane Group

Intersection Sign configuration not allowed in HCM analysis.

Movement	EBL	EBT	EBR	WBL	WBT	WBR	NBL	NBT	NBR	SBL	SBT	SBR
Lane Configurations												
Ideal Flow (vphpi)	1900	1900	1900	1900	1900	1900	1900	1900	1900	1900	1900	1900
Total Lost time (s)	3.0	3.0	3.0	3.0	3.0	3.0	3.0	3.0	3.0	3.0	3.0	3.0
Lane Util. Factor	1.00	0.95	1.00	0.97	0.95	1.00	0.97	0.95	1.00	0.97	0.95	1.00
Frt	1.00	1.00	0.85	1.00	1.00	0.85	1.00	1.00	0.85	1.00	1.00	0.85
Flt Protected	0.95	1.00	1.00	0.95	1.00	1.00	0.95	1.00	1.00	0.95	1.00	1.00
Satd. Flow (prot)	1770	3539	1583	3433	3539	1583	3433	3539	1583	3433	3539	1583
Flt Permitted	0.95	1.00	1.00	0.95	1.00	1.00	0.95	1.00	1.00	0.95	1.00	1.00
Satd. Flow (perm)	1770	3539	1583	3433	3539	1583	3433	3539	1583	3433	3539	1583
Volume (vph)	49	350	209	211	136	137	124	344	226	190	336	19
Peak-hour factor, PHF	0.72	0.76	0.80	0.65	0.79	0.76	0.89	0.97	0.67	0.73	0.88	0.48
Adj. Flow (vph)	68	461	261	325	172	180	139	355	337	260	382	40
RTOR Reduction (vph)	0	0	0	0	0	0	0	0	0	0	0	0
Lane Group Flow (vph)	68	461	261	325	172	180	139	355	337	260	382	40
Turn Type	Prot		Free	Prot		Free	Prot		Free	Prot		Free
Protected Phases	7	4		3	8		5	2		1	6	
Permitted Phases			Free			Free			Free			Free
Actuated Green, G (s)	7.8	19.9	95.5	14.1	26.2	95.5	9.6	21.0	95.5	12.5	23.9	95.5
Effective Green, g (s)	11.8	23.9	95.5	18.1	30.2	95.5	13.6	25.0	95.5	16.5	27.9	95.5
Actuated g/C Ratio	0.12	0.25	1.00	0.19	0.32	1.00	0.14	0.28	1.00	0.17	0.29	1.00
Clearance Time (s)	7.0	7.0		7.0	7.0		7.0	7.0		7.0	7.0	
Vehicle Extension (s)	3.0	3.0		3.0	3.0		3.0	5.0		3.0	5.0	
Lane Grp Cap (vph)	219	886	1583	651	1119	1583	489	926	1583	593	1034	1583
v/s Ratio Prot	0.04	c0.13		c0.09	0.05		0.04	0.10		c0.08	c0.11	
v/s Ratio Perm			0.16			0.11			c0.21			0.03
v/c Ratio	0.31	0.52	0.16	0.50	0.15	0.11	0.28	0.38	0.21	0.44	0.37	0.03
Uniform Delay, d1	38.1	30.9	0.0	34.6	23.5	0.0	36.6	28.9	0.0	35.4	26.8	0.0
Progression Factor	1.00	1.00	1.00	1.00	1.00	1.00	1.00	1.00	1.00	1.00	1.00	1.00
Incremental Delay, d2	0.8	0.6	0.2	0.6	0.1	0.1	0.3	0.6	0.3	0.5	0.5	0.0
Delay (s)	39.0	31.4	0.2	35.2	23.5	0.1	36.9	29.5	0.3	35.9	27.3	0.0
Level of Service	D	C	A	D	C	A	D	C	A	D	C	A
Approach Delay (s)		21.8			22.9			18.9			29.0	
Approach LOS		C			C			B			C	

Intersection Summary

HCM Average Control Delay	22.9	HCM Level of Service	C
HCM Volume to Capacity ratio	0.44		
Actuated Cycle Length (s)	95.5	Sum of lost time (s)	9.0
Intersection Capacity Utilization	55.2%	ICU Level of Service	B
Analysis Period (min)	15		

c Critical Lane Group

Movement	EBL	EBR	NBL	NBT	SBT	SBR
Lane Configurations						
Sign Control	Stop			Free	Free	
Grade	0%			0%	0%	
Volume (veh/h)	30	20	13	300	597	22
Peak Hour Factor	0.63	0.63	0.65	0.83	0.89	0.69
Hourly flow rate (vph)	48	32	20	361	671	32
Pedestrians						
Lane Width (ft)						
Walking Speed (ft/s)						
Percent Blockage						
Right turn flare (veh)						
Median type	None					
Median storage veh)						
Upstream signal (ft)						
pX, platoon unblocked						
vC, conflicting volume	1088	687	703			
vC1, stage 1 conf vol						
vC2, stage 2 conf vol						
vCu, unblocked vol	1088	687	703			
tC, single (s)	6.4	6.2	4.1			
tC, 2 stage (s)						
tF (s)	3.5	3.3	2.2			
p0 queue free %	80	93	98			
cM capacity (veh/h)	233	447	895			

Direction, Lane #	EB 1	NB 1	SB 1
Volume Total	79	381	703
Volume Left	48	20	0
Volume Right	32	0	32
cSH	289	895	1700
Volume to Capacity	0.28	0.02	0.41
Queue Length 95th (ft)	27	2	0
Control Delay (s)	22.1	0.7	0.0
Lane LOS	C	A	
Approach Delay (s)	22.1	0.7	0.0
Approach LOS	C		

Intersection Summary				
Average Delay		1.7		
Intersection Capacity Utilization		42.8%	ICU Level of Service	A
Analysis Period (min)		15		

Movement	WBL	WBR	NBT	NBR	SBL	SBT
Lane Configurations						
Ideal Flow (vphpl)	1900	1900	1900	1900	1900	1900
Total Lost time (s)	3.0	3.0	3.0	3.0	3.0	3.0
Lane Util. Factor	0.97	1.00	0.91	1.00	1.00	0.91
Frt	1.00	0.85	1.00	0.85	1.00	1.00
Flt Protected	0.95	1.00	1.00	1.00	0.95	1.00
Satd. Flow (prot)	3433	1583	5085	1583	1770	5085
Flt Permitted	0.95	1.00	1.00	1.00	0.95	1.00
Satd. Flow (perm)	3433	1583	5085	1583	1770	5085
Volume (vph)	157	157	1647	170	171	3345
Peak-hour factor, PHF	0.87	0.94	0.96	0.83	0.84	0.93
Adj. Flow (vph)	180	167	1716	205	204	3597
RTOR Reduction (vph)	0	0	0	0	0	0
Lane Group Flow (vph)	180	167	1716	205	204	3597
Turn Type		Free		Free	Prot	
Protected Phases	4		2		1	6
Permitted Phases		Free		Free		
Actuated Green, G (s)	10.7	100.0	52.9	100.0	14.4	74.3
Effective Green, g (s)	15.2	100.0	57.4	100.0	18.4	78.8
Actuated g/C Ratio	0.15	1.00	0.57	1.00	0.18	0.79
Clearance Time (s)	7.5		7.5		7.0	7.5
Vehicle Extension (s)	3.0		6.0		3.0	6.0
Lane Grp Cap (vph)	522	1583	2919	1583	328	4007
v/s Ratio Prot	c0.05		0.34		0.12	c0.71
v/s Ratio Perm		0.11		0.13		
v/c Ratio	0.34	0.11	0.59	0.13	0.63	0.90
Uniform Delay, d1	37.9	0.0	13.7	0.0	37.6	7.7
Progression Factor	0.88	1.00	1.00	1.00	1.00	1.00
Incremental Delay, d2	0.4	0.1	0.9	0.2	3.7	3.7
Delay (s)	33.7	0.1	14.6	0.2	41.3	11.3
Level of Service	C	A	B	A	D	B
Approach Delay (s)	17.5		13.0			12.9
Approach LOS	B		B			B

Intersection Summary				
HCM Average Control Delay	13.2	HCM Level of Service	B	
HCM Volume to Capacity ratio	0.81			
Actuated Cycle Length (s)	100.0	Sum of lost time (s)	6.0	
Intersection Capacity Utilization	75.8%	ICU Level of Service	D	
Analysis Period (min)	15			

c Critical Lane Group

HCM Signalized Intersection Capacity Analysis
13: Nokes Blvd. & Atlantic Blvd.

Kincora
Existing Conditions (2008)

Movement	EBL	EBT	EBR	WBL	WBT	WBR	NBL	NBT	NBR	SBL	SBT	SBR
Lane Configurations												
Ideal Flow (vphpl)	1900	1900	1900	1900	1900	1900	1900	1900	1900	1900	1900	1900
Total Lost time (s)	3.0	3.0	3.0	3.0	3.0	3.0	3.0	3.0	3.0	3.0	3.0	3.0
Lane Util. Factor	0.97	0.95	1.00	0.97	0.95	1.00	0.97	0.95	1.00	0.97	0.95	1.00
Frt	1.00	1.00	0.85	1.00	1.00	0.85	1.00	1.00	0.85	1.00	1.00	0.85
Flt Protected	0.95	1.00	1.00	0.95	1.00	1.00	0.95	1.00	1.00	0.95	1.00	1.00
Satd. Flow (prot)	3433	3539	1583	3433	3539	1583	3433	3539	1583	3433	3539	1583
Flt Permitted	0.95	1.00	1.00	0.95	1.00	1.00	0.95	1.00	1.00	0.95	1.00	1.00
Satd. Flow (perm)	3433	3539	1583	3433	3539	1583	3433	3539	1583	3433	3539	1583
Volume (vph)	9	277	55	121	217	10	27	86	112	29	178	70
Peak-hour factor, PHF	0.45	0.75	0.53	0.76	0.74	0.83	0.40	0.72	0.82	0.81	0.93	0.80
Adj. Flow (vph)	20	369	104	159	293	12	68	119	137	36	191	88
RTOR Reduction (vph)	0	0	0	0	0	0	0	0	95	0	0	0
Lane Group Flow (vph)	20	369	104	159	293	12	68	119	42	36	191	88
Turn Type	Prot		Free	Prot		Free	Prot		pm+ov	Prot		Free
Protected Phases	1	6		5	2		7	4	5	3	8	
Permitted Phases			Free			Free			4			Free
Actuated Green, G (s)	2.5	45.6	100.0	9.4	52.5	100.0	5.9	13.5	22.9	4.0	11.6	100.0
Effective Green, g (s)	6.5	49.6	100.0	13.4	56.5	100.0	9.9	17.0	30.4	8.0	15.1	100.0
Actuated g/C Ratio	0.06	0.50	1.00	0.13	0.56	1.00	0.10	0.17	0.30	0.08	0.15	1.00
Clearance Time (s)	7.0	7.0		7.0	7.0		7.0	6.5	7.0	7.0	6.5	
Vehicle Extension (s)	2.5	4.0		2.5	4.0		2.5	2.5	2.5	2.5	2.5	
Lane Grp Cap (vph)	223	1755	1583	460	2000	1583	340	602	529	275	534	1583
v/s Ratio Prot	0.01	c0.10		c0.05	0.08		c0.02	0.03	0.01	0.01	c0.05	
v/s Ratio Perm			c0.07			0.01			0.02			0.06
v/c Ratio	0.09	0.21	0.07	0.35	0.15	0.01	0.20	0.20	0.08	0.13	0.36	0.06
Uniform Delay, d1	44.0	14.2	0.0	39.3	10.3	0.0	41.4	35.6	24.8	42.8	38.1	0.0
Progression Factor	0.65	1.35	1.00	1.00	1.00	1.00	1.00	1.00	1.00	1.00	1.00	1.00
Incremental Delay, d2	0.1	0.3	0.1	0.3	0.2	0.0	0.2	0.1	0.0	0.2	0.3	0.1
Delay (s)	28.8	19.4	0.1	39.6	10.5	0.0	41.6	35.8	24.9	42.9	38.4	0.1
Level of Service	C	B	A	D	B	A	D	D	C	D	D	A
Approach Delay (s)		15.7			20.2			32.4			28.2	
Approach LOS		B			C			C			C	

Intersection Summary			
HCM Average Control Delay	22.9	HCM Level of Service	C
HCM Volume to Capacity ratio	0.25		
Actuated Cycle Length (s)	100.0	Sum of lost time (s)	12.0
Intersection Capacity Utilization	38.2%	ICU Level of Service	A
Analysis Period (min)	15		

c Critical Lane Group

HCM Signalized Intersection Capacity Analysis
14: Nokes Blvd. & Cascades Parkway

Kincora
Existing Conditions (2008)

Movement	EBL	EBT	EBR	WBL	WBT	WBR	NBL	NBT	NBR	SBL	SBT	SBR
Lane Configurations												
Ideal Flow (vphpl)	1900	1900	1900	1900	1900	1900	1900	1900	1900	1900	1900	1900
Total Lost time (s)	3.0	3.0	3.0	3.0	3.0	3.0	3.0	3.0	3.0	3.0	3.0	3.0
Lane Util. Factor	0.97	1.00	1.00	1.00	0.95	1.00	0.97	0.95	1.00	1.00	0.95	1.00
Frt	1.00	1.00	0.85	1.00	1.00	0.85	1.00	1.00	0.85	1.00	1.00	0.85
Flt Protected	0.95	1.00	1.00	0.95	1.00	1.00	0.95	1.00	1.00	0.95	1.00	1.00
Satd. Flow (prot)	3433	1863	1583	1770	3539	1583	3433	3539	1583	1770	3539	1583
Flt Permitted	0.95	1.00	1.00	0.95	1.00	1.00	0.95	1.00	1.00	0.95	1.00	1.00
Satd. Flow (perm)	3433	1863	1583	1770	3539	1583	3433	3539	1583	1770	3539	1583
Volume (vph)	72	38	79	190	113	18	161	593	220	4	648	116
Peak-hour factor, PHF	0.90	0.79	0.66	0.72	0.72	0.64	0.84	0.84	0.79	0.50	0.93	0.83
Adj. Flow (vph)	80	48	120	264	157	28	192	706	278	8	695	140
RTOR Reduction (vph)	0	0	101	0	0	21	0	0	148	0	0	85
Lane Group Flow (vph)	80	48	19	264	157	7	192	706	130	8	695	55
Turn Type	Prot		Perm	Prot		Perm	Prot		Perm	Prot		Perm
Protected Phases	7	4		3	8		1	6		5	2	
Permitted Phases			4			8			6			2
Actuated Green, G (s)	7.9	11.5	11.5	16.8	20.4	20.4	10.0	44.1	44.1	1.9	38.0	36.0
Effective Green, g (s)	11.9	16.5	16.5	20.8	25.4	25.4	14.0	48.6	48.6	5.9	40.5	40.5
Actuated g/C Ratio	0.11	0.16	0.16	0.20	0.24	0.24	0.13	0.47	0.47	0.06	0.39	0.39
Clearance Time (s)	7.0	8.0	8.0	7.0	8.0	8.0	7.0	7.5	7.5	7.0	7.5	7.5
Vehicle Extension (s)	3.0	3.0	3.0	3.0	3.0	3.0	3.0	3.0	3.0	3.0	3.0	3.0
Lane Grp Cap (vph)	394	296	252	355	866	387	463	1657	741	101	1381	618
v/s Ratio Prot	0.02	0.03		c0.15	c0.04		c0.06	0.20		0.00	c0.20	
v/s Ratio Perm			0.01			0.00			0.08			0.03
v/c Ratio	0.20	0.16	0.08	0.74	0.18	0.02	0.41	0.43	0.18	0.08	0.50	0.09
Uniform Delay, d1	41.7	37.7	37.2	39.0	31.0	29.7	41.1	18.3	16.0	46.4	24.0	20.0
Progression Factor	1.00	1.00	1.00	1.00	1.00	1.00	1.00	1.00	1.00	1.00	1.00	1.00
Incremental Delay, d2	0.3	0.3	0.1	8.2	0.1	0.0	0.6	0.2	0.1	0.3	0.3	0.1
Delay (s)	41.9	37.9	37.3	47.2	31.1	29.8	41.7	18.5	16.1	46.7	24.3	20.1
Level of Service	D	D	D	D	C	C	D	B	B	D	C	C
Approach Delay (s)		38.9			40.5			21.7			23.8	
Approach LOS		D			D			C			C	

Intersection Summary			
HCM Average Control Delay	27.0	HCM Level of Service	C
HCM Volume to Capacity ratio	0.48		
Actuated Cycle Length (s)	103.8	Sum of lost time (s)	9.0
Intersection Capacity Utilization	60.5%	ICU Level of Service	B
Analysis Period (min)	15		

c Critical Lane Group

Movement	EBL	EBT	EBR	WBL	WBT	WBR	NBL	NBT	NBR	SBL	SBT	SBR
Lane Configurations												
Ideal Flow (vphpl)	1900	1900	1900	1900	1900	1900	1900	1900	1900	1900	1900	1900
Total Lost time (s)	3.0	3.0	3.0	3.0	3.0		3.0	3.0	3.0	3.0	3.0	3.0
Lane Util. Factor	1.00	1.00	1.00	0.97	1.00		0.97	0.91	1.00	1.00	0.91	1.00
Frt	1.00	1.00	0.85	1.00	0.92		1.00	1.00	0.85	1.00	1.00	0.85
Flt Protected	0.95	1.00	1.00	0.95	1.00		0.95	1.00	1.00	0.95	1.00	1.00
Satd. Flow (prot)	1770	1863	1583	3183	1587		3433	5085	1583	1770	5085	1583
Flt Permitted	0.33	1.00	1.00	0.75	1.00		0.95	1.00	1.00	0.95	1.00	1.00
Satd. Flow (perm)	621	1863	1583	2503	1587		3433	5085	1583	1770	5085	1583
Volume (vph)	6	7	51	125	58	59	353	1822	217	147	3355	126
Peak-hour factor, PHF	0.50	0.44	0.91	0.53	0.91	0.78	0.73	0.82	0.76	0.55	0.88	0.58
Adj. Flow (vph)	12	16	56	236	64	76	484	2222	286	267	3812	217
RTOR Reduction (vph)	0	0	1	0	33	0	0	0	0	0	0	51
Lane Group Flow (vph)	12	16	55	236	107	0	484	2222	286	267	3812	166
Heavy Vehicles (%)	2%	2%	2%	10%	10%	10%	2%	2%	2%	2%	2%	2%
Turn Type	Perm		pm+ov	Perm			Prot		Free	Prot		Perm
Protected Phases		8	1		4		1	6		5	2	
Permitted Phases	8		8	4					Free			2
Actuated Green, G (s)	8.0	8.0	21.0	8.0	8.0		13.0	77.9	130.0	22.6	87.5	87.5
Effective Green, g (s)	12.0	12.0	29.0	12.0	12.0		17.0	82.4	130.0	26.6	92.0	92.0
Actuated g/C Ratio	0.09	0.09	0.22	0.09	0.09		0.13	0.63	1.00	0.20	0.71	0.71
Clearance Time (s)	7.0	7.0	7.0	7.0	7.0		7.0	7.5		7.0	7.5	7.5
Vehicle Extension (s)	2.0	2.0	2.0	2.0	2.0		2.0	3.0		2.0	3.0	3.0
Lane Grp Cap (vph)	57	172	390	231	146		449	3223	1583	362	3599	1120
v/s Ratio Prot		0.01	0.02		0.07		c0.14	0.44		0.15	c0.75	
v/s Ratio Perm	0.02		0.02	c0.09					0.18			0.10
v/c Ratio	0.21	0.09	0.14	1.02	0.74		1.08	0.69	0.18	0.74	1.06	0.15
Uniform Delay, d1	54.6	54.0	40.5	59.0	57.5		56.5	15.5	0.0	48.4	19.0	6.2
Progression Factor	1.00	1.00	1.00	1.00	1.00		1.32	0.26	1.00	1.00	1.00	1.00
Incremental Delay, d2	0.7	0.1	0.1	64.9	15.2		58.3	0.9	0.2	6.6	33.7	0.3
Delay (s)	55.3	54.1	40.6	123.9	72.6		132.7	4.8	0.2	55.0	52.7	6.5
Level of Service	E	D	D	F	E		F	A	A	E	D	A
Approach Delay (s)		45.3			104.8			25.1			50.5	
Approach LOS		D			F			C			D	

Intersection Summary			
HCM Average Control Delay	43.3	HCM Level of Service	D
HCM Volume to Capacity ratio	1.06		
Actuated Cycle Length (s)	130.0	Sum of lost time (s)	9.0
Intersection Capacity Utilization	95.1%	ICU Level of Service	F
Analysis Period (min)	15		

c Critical Lane Group

Movement	EBL	EBR	NBL	NBT	SBT	SBR
Lane Configurations						
Ideal Flow (vphpl)	1900	1900	1900	1900	1900	1900
Total Lost time (s)	3.0	3.0	3.0	3.0	3.0	3.0
Lane Util. Factor	1.00	1.00	1.00	0.95	0.95	1.00
Frt	1.00	0.85	1.00	1.00	1.00	0.85
Flt Protected	0.95	1.00	0.95	1.00	1.00	1.00
Satd. Flow (prot)	1770	1583	1770	3539	3539	1583
Flt Permitted	0.95	1.00	0.27	1.00	1.00	1.00
Satd. Flow (perm)	1770	1583	505	3539	3539	1583
Volume (vph)	97	54	96	957	729	142
Peak-hour factor, PHF	0.81	0.71	0.89	0.85	0.95	0.83
Adj. Flow (vph)	120	76	108	1126	767	171
RTOR Reduction (vph)	0	62	0	0	0	50
Lane Group Flow (vph)	120	14	108	1126	767	121
Turn Type		Perm	pm+pt			pm+ov
Protected Phases	4		1	6	2	4
Permitted Phases		4	6			2
Actuated Green, G (s)	9.9	9.9	49.8	49.6	34.4	44.3
Effective Green, g (s)	13.9	13.9	53.1	53.1	37.9	51.8
Actuated g/C Ratio	0.19	0.19	0.73	0.73	0.52	0.71
Clearance Time (s)	7.0	7.0	7.0	6.5	6.5	7.0
Vehicle Extension (s)	3.0	3.0	4.0	4.0	4.0	3.0
Lane Grp Cap (vph)	337	301	579	2574	1837	1188
v/s Ratio Prot	c0.07		0.03	c0.32	0.22	0.02
v/s Ratio Perm		0.01	0.10			0.06
v/c Ratio	0.36	0.05	0.19	0.44	0.42	0.10
Uniform Delay, d1	25.7	24.1	3.7	4.0	10.8	3.3
Progression Factor	1.00	1.00	1.00	1.00	1.00	1.00
Incremental Delay, d2	0.6	0.1	0.2	0.2	0.2	0.0
Delay (s)	26.3	24.2	3.9	4.1	11.0	3.4
Level of Service	C	C	A	A	B	A
Approach Delay (s)	25.5			4.1	9.6	
Approach LOS	C			A	A	

Intersection Summary			
HCM Average Control Delay	8.1	HCM Level of Service	A
HCM Volume to Capacity ratio	0.42		
Actuated Cycle Length (s)	73.0	Sum of lost time (s)	6.0
Intersection Capacity Utilization	42.2%	ICU Level of Service	A
Analysis Period (min)	15		

c Critical Lane Group

Movement	EBL	EBT	EBR	WBL	WBT	WBR	NBL	NBT	NBR	SBL	SBT	SBR
Lane Configurations												
Ideal Flow (vphpl)	1900	1900	1900	1900	1900	1900	1900	1900	1900	1900	1900	1900
Total Lost time (s)		3.0		3.0		3.0	3.0	3.0	3.0	3.0	3.0	3.0
Lane Util. Factor		1.00		1.00		1.00	1.00	0.91	1.00	1.00	0.91	1.00
Frt		0.91		1.00		0.85	1.00	1.00	0.85	1.00	1.00	0.85
Flt Protected		0.98		0.95		1.00	0.95	1.00	1.00	0.95	1.00	1.00
Satd. Flow (prot)		1667		1770		1583	1770	5085	1583	1770	5085	1583
Flt Permitted		0.94		0.75		1.00	0.95	1.00	1.00	0.95	1.00	1.00
Satd. Flow (perm)		1596		1397		1583	1770	5085	1583	1770	5085	1583
Volume (vph)	1	0	2	88	0	28	3	2293	314	135	3267	3
Peak-hour factor, PHF	0.25	0.25	0.25	0.85	0.25	0.75	0.38	0.89	0.80	0.85	0.88	0.38
Adj. Flow (vph)	4	0	8	104	0	37	8	2576	392	159	3712	8
RTOR Reduction (vph)	0	7	0	0	0	31	0	0	149	0	0	2
Lane Group Flow (vph)	0	5	0	104	0	6	8	2576	243	159	3712	6
Turn Type	Perm			Perm		Perm	Prot		Perm	Prot		Perm
Protected Phases		4			8		1	6		5	2	
Permitted Phases	4			8		8			6			2
Actuated Green, G (s)		16.5		16.5		16.5	1.3	76.0	76.0	16.0	90.7	90.7
Effective Green, g (s)		20.5		20.5		20.5	5.3	80.5	80.5	20.0	95.2	95.2
Actuated g/C Ratio		0.16		0.16		0.16	0.04	0.62	0.62	0.15	0.73	0.73
Clearance Time (s)		7.0		7.0		7.0	7.0	7.5	7.5	7.0	7.5	7.5
Vehicle Extension (s)		5.0		5.0		5.0	2.0	2.0	2.0	2.0	2.0	2.0
Lane Grp Cap (vph)		252		220		250	72	3149	980	272	3724	1159
v/s Ratio Prot							0.00	0.51		c0.09	c0.73	
v/s Ratio Perm		0.00		c0.07		0.00			0.15			0.00
v/c Ratio		0.02		0.47		0.02	0.11	0.82	0.25	0.58	1.00	0.01
Uniform Delay, d1		46.3		49.8		46.3	60.1	19.1	11.1	51.1	17.2	4.7
Progression Factor		1.00		1.00		1.00	1.00	1.00	1.00	0.84	1.68	1.48
Incremental Delay, d2		0.1		3.3		0.1	0.2	2.5	0.6	0.2	3.8	0.0
Delay (s)		46.3		53.2		46.4	60.3	21.6	11.7	43.1	32.7	6.9
Level of Service		D		D		D	E	C	B	D	C	A
Approach Delay (s)		46.3			51.4			20.4			33.1	
Approach LOS		D			D			C			C	

Intersection Summary			
HCM Average Control Delay	28.1	HCM Level of Service	C
HCM Volume to Capacity ratio	0.89		
Actuated Cycle Length (s)	130.0	Sum of lost time (s)	9.0
Intersection Capacity Utilization	88.8%	ICU Level of Service	E
Analysis Period (min)	15		

c Critical Lane Group

Movement	EBL	EBT	EBR	WBL	WBT	WBR	NBL	NBT	NBR	SBL	SBT	SBR
Lane Configurations												
Ideal Flow (vphpl)	1900	1900	1900	1900	1900	1900	1900	1900	1900	1900	1900	1900
Total Lost time (s)	3.0	3.0	3.0	3.0	3.0	3.0	3.0	3.0	3.0	3.0	3.0	3.0
Lane Util. Factor	1.00	0.91	1.00	1.00	0.91	1.00	1.00	0.95	1.00	0.97	0.95	1.00
Frt	1.00	1.00	0.85	1.00	1.00	0.85	1.00	1.00	0.85	1.00	1.00	0.85
Flt Protected	0.95	1.00	1.00	0.95	1.00	1.00	0.95	1.00	1.00	0.95	1.00	1.00
Satd. Flow (prot)	1770	5085	1583	1770	5085	1583	1770	3539	1583	3433	3539	1583
Flt Permitted	0.95	1.00	1.00	0.95	1.00	1.00	0.95	1.00	1.00	0.95	1.00	1.00
Satd. Flow (perm)	1770	5085	1583	1770	5085	1583	1770	3539	1583	3433	3539	1583
Volume (vph)	120	1068	252	103	362	216	62	227	110	674	535	402
Peak-hour factor, PHF	0.86	0.92	0.94	0.83	0.91	0.92	0.78	0.81	0.76	0.91	0.80	0.73
Adj. Flow (vph)	140	1161	268	124	398	235	79	280	145	741	689	551
RTOR Reduction (vph)	0	0	0	0	0	0	0	0	11	0	0	94
Lane Group Flow (vph)	140	1161	268	124	398	235	79	280	134	741	689	457
Turn Type	Prot		Free	Prot		Free	Prot		pm+ov	Prot		pm+ov
Protected Phases	1	6		5	2		3	8	5	7	4	1
Permitted Phases			Free			Free			8			4
Actuated Green, G (s)	14.9	43.7	130.0	13.8	42.6	130.0	6.4	15.6	29.4	29.4	38.6	53.5
Effective Green, g (s)	18.9	47.7	130.0	17.8	46.6	130.0	10.4	19.1	36.9	33.4	42.1	81.0
Actuated g/C Ratio	0.15	0.37	1.00	0.14	0.36	1.00	0.08	0.15	0.28	0.26	0.32	0.47
Clearance Time (s)	7.0	7.0		7.0	7.0		7.0	6.5	7.0	7.0	6.5	7.0
Vehicle Extension (s)	2.0	3.0		2.0	3.0		2.0	2.0	2.0	2.0	2.0	2.0
Lane Grp Cap (vph)	257	1886	1583	242	1823	1583	142	520	486	882	1146	779
v/s Ratio Prot	0.08	c0.23		0.07	0.08		0.04	0.08	0.04	c0.22	0.19	c0.09
v/s Ratio Perm			c0.17			0.15			0.05			0.20
v/c Ratio	0.54	0.62	0.17	0.51	0.22	0.15	0.56	0.54	0.28	0.84	0.58	0.59
Uniform Delay, d1	51.6	33.8	0.0	52.1	29.0	0.0	57.6	51.4	36.2	45.8	36.6	25.3
Progression Factor	1.00	1.00	1.00	1.11	0.58	1.00	1.00	1.00	1.00	1.00	1.00	1.00
Incremental Delay, d2	1.3	1.6	0.2	0.8	0.3	0.2	2.7	0.5	0.1	7.0	0.5	0.7
Delay (s)	52.8	35.3	0.2	58.7	17.2	0.2	60.2	51.9	36.3	52.7	37.1	26.0
Level of Service	D	D	A	E	B	A	E	D	D	D	D	C
Approach Delay (s)		30.9			18.7			48.7			39.9	
Approach LOS		C			B			D			D	

Intersection Summary			
HCM Average Control Delay	34.5	HCM Level of Service	C
HCM Volume to Capacity ratio	0.65		
Actuated Cycle Length (s)	130.0	Sum of lost time (s)	3.0
Intersection Capacity Utilization	65.2%	ICU Level of Service	C
Analysis Period (min)	15		

c Critical Lane Group

HCM Signalized Intersection Capacity Analysis
19: Farmwell Road & Smith Switch Road

Kincora
Existing Conditions (2008)

Movement	EBL	EBT	EBR	WBL	WBT	WBR	NBL	NBT	NBR	SBL	SBT	SBR
Lane Configurations												
Ideal Flow (vphpl)	1900	1900	1900	1900	1900	1900	1900	1900	1900	1900	1900	1900
Total Lost time (s)	3.0	3.0	3.0	3.0	3.0	3.0	3.0	3.0	3.0	3.0	3.0	
Lane Util. Factor	1.00	0.91	1.00	1.00	0.91	1.00	1.00	0.95	1.00	1.00	0.95	
Frt	1.00	1.00	0.85	1.00	1.00	0.85	1.00	1.00	0.85	1.00	0.93	
Flt Protected	0.95	1.00	1.00	0.95	1.00	1.00	0.95	1.00	1.00	0.95	1.00	
Satd. Flow (prot)	1770	5085	1583	1770	5085	1583	1770	3539	1583	1770	3294	
Flt Permitted	0.95	1.00	1.00	0.95	1.00	1.00	0.72	1.00	1.00	0.53	1.00	
Satd. Flow (perm)	1770	5085	1583	1770	5085	1583	1344	3539	1583	988	3294	
Volume (vph)	34	1790	29	224	587	82	15	53	352	88	13	16
Peak-hour factor, PHF	0.57	0.92	0.52	0.75	0.86	0.68	0.42	0.70	0.84	0.50	0.46	0.67
Adj. Flow (vph)	60	1946	56	299	683	121	36	76	419	176	28	24
RTOR Reduction (vph)	0	0	27	0	0	29	0	0	0	0	20	0
Lane Group Flow (vph)	60	1946	29	299	683	92	36	76	419	176	32	0
Turn Type	Prot		pm+ov	Prot		pm+ov	pm+pt		Free	pm+pt		
Protected Phases	1	6	3	5	2	7	3	8		7	4	
Permitted Phases			6			2	8		Free	4		
Actuated Green, G (s)	5.6	58.4	61.6	25.1	77.4	93.8	8.8	5.6	130.0	27.0	18.8	
Effective Green, g (s)	9.6	61.9	67.1	28.6	80.9	99.3	14.3	9.1	130.0	30.5	22.3	
Actuated g/C Ratio	0.07	0.48	0.52	0.22	0.62	0.76	0.11	0.07	1.00	0.23	0.17	
Clearance Time (s)	7.0	6.5	5.0	6.5	6.5	5.0	5.0	6.5		5.0	6.5	
Vehicle Extension (s)	2.0	3.0	2.0	2.0	3.0	2.0	2.0	2.0		2.0	2.0	
Lane Grp Cap (vph)	131	2421	854	389	3164	1246	165	248	1583	342	565	
v/s Ratio Prot	0.03	c0.38	0.00	c0.17	0.13	0.01	0.01	0.02		c0.07	0.01	
v/s Ratio Perm			0.02			0.05	0.02		0.26	c0.05		
v/c Ratio	0.46	0.80	0.03	0.77	0.22	0.07	0.22	0.31	0.26	0.51	0.06	
Uniform Delay, d1	57.7	28.9	15.5	47.6	10.7	3.8	52.6	57.5	0.0	42.3	45.1	
Progression Factor	1.10	0.75	0.15	1.22	0.85	0.53	1.00	1.00	1.00	1.00	1.00	
Incremental Delay, d2	0.7	2.2	0.0	7.7	0.2	0.0	0.2	0.3	0.4	0.5	0.2	
Delay (s)	64.2	23.8	2.4	65.9	9.2	2.0	52.8	57.7	0.4	42.9	45.2	
Level of Service	E	C	A	E	A	A	D	E	A	D	D	
Approach Delay (s)		24.4			23.8			12.2			43.4	
Approach LOS		C			C			B			D	

Intersection Summary

HCM Average Control Delay	23.7	HCM Level of Service	C
HCM Volume to Capacity ratio	0.72		
Actuated Cycle Length (s)	130.0	Sum of lost time (s)	9.0
Intersection Capacity Utilization	68.5%	ICU Level of Service	C
Analysis Period (min)	15		

c Critical Lane Group

HCM Signalized Intersection Capacity Analysis
20: Waxpool Road & Loudoun County Pkwy.

Kincora
Existing Conditions (2008)

Movement	EBL	EBT	EBR	WBL	WBT	WBR	NBL	NBT	NBR	SBL	SBT	SBR
Lane Configurations												
Ideal Flow (vphpl)	1900	1900	1900	1900	1900	1900	1900	1900	1900	1900	1900	1900
Total Lost time (s)	3.0	3.0	3.0	3.0	3.0	3.0	3.0	3.0	3.0	3.0	3.0	3.0
Lane Util. Factor	0.97	0.91	1.00	0.97	0.91	1.00	1.00	0.95	1.00	0.97	0.95	1.00
Frt	1.00	1.00	0.85	1.00	1.00	0.85	1.00	1.00	0.85	1.00	1.00	0.85
Flt Protected	0.95	1.00	1.00	0.95	1.00	1.00	0.95	1.00	1.00	0.95	1.00	1.00
Satd. Flow (prot)	3433	5085	1583	3433	5085	1583	1770	3539	1583	3433	3539	1583
Flt Permitted	0.95	1.00	1.00	0.95	1.00	1.00	0.95	1.00	1.00	0.95	1.00	1.00
Satd. Flow (perm)	3433	5085	1583	3433	5085	1583	1770	3539	1583	3433	3539	1583
Volume (vph)	59	2001	9	402	852	394	70	331	1253	474	91	62
Peak-hour factor, PHF	0.67	0.91	0.32	0.88	0.96	0.88	0.76	0.94	0.89	0.90	0.69	0.50
Adj. Flow (vph)	88	2199	28	457	888	448	92	352	1408	527	132	124
RTOR Reduction (vph)	0	0	15	0	0	0	0	0	0	0	0	0
Lane Group Flow (vph)	88	2199	13	457	888	448	92	352	1408	527	132	124
Turn Type	Prot		Perm	Prot		Free	Split		Free	Split		Free
Protected Phases	5	2		1	6		4	4		3	3	
Permitted Phases			2			Free			Free			Free
Actuated Green, G (s)	7.0	56.7	56.7	15.0	64.7	130.0	10.7	10.7	130.0	18.6	18.6	130.0
Effective Green, g (s)	11.0	61.2	61.2	19.0	69.2	130.0	15.2	15.2	130.0	22.6	22.6	130.0
Actuated g/C Ratio	0.08	0.47	0.47	0.15	0.53	1.00	0.12	0.12	1.00	0.17	0.17	1.00
Clearance Time (s)	7.0	7.5	7.5	7.0	7.5		7.5	7.5		7.0	7.0	
Vehicle Extension (s)	3.0	4.0	4.0	3.0	4.0		3.0	3.0		3.0	3.0	
Lane Grp Cap (vph)	290	2394	745	502	2707	1583	207	414	1583	597	615	1583
v/s Ratio Prot	0.03	0.43		0.13	0.17		0.05	0.10		0.15	0.04	
v/s Ratio Perm			0.01			0.28			c0.89			0.08
v/c Ratio	0.30	0.92	0.02	0.91	0.33	0.28	0.44	0.85	0.89	0.88	0.21	0.08
Uniform Delay, d1	55.9	32.1	18.4	54.7	17.2	0.0	53.5	56.3	0.0	52.4	46.1	0.0
Progression Factor	0.87	1.32	1.56	1.00	1.00	1.00	1.00	1.00	1.00	1.00	1.00	1.00
Incremental Delay, d2	0.4	5.3	0.0	20.6	0.3	0.4	1.5	15.3	7.9	14.4	0.2	0.1
Delay (s)	49.3	47.5	28.6	75.3	17.6	0.4	55.0	71.6	7.9	66.8	46.3	0.1
Level of Service	D	D	C	E	B	A	D	E	A	E	D	A
Approach Delay (s)		47.4			28.0			22.3			52.8	
Approach LOS		D			C			C			D	

Intersection Summary

HCM Average Control Delay	36.0	HCM Level of Service	D
HCM Volume to Capacity ratio	0.89		
Actuated Cycle Length (s)	130.0	Sum of lost time (s)	0.0
Intersection Capacity Utilization	86.1%	ICU Level of Service	E
Analysis Period (min)	15		

c Critical Lane Group

HCM Signalized Intersection Capacity Analysis
21: Waxpool Road & Pacific Blvd.

Kincora
Existing Conditions (2008)

Movement	EBL	EBT	EBR	WBL	WBT	WBR	NBL	NBT	NBR	SBL	SBT	SBR
Lane Configurations												
Ideal Flow (vphpl)	1900	1900	1900	1900	1900	1900	1900	1900	1900	1900	1900	1900
Total Lost time (s)	3.0	3.0	3.0	3.0	3.0	3.0	3.0	3.0	3.0	3.0	3.0	3.0
Lane Util. Factor	0.97	0.86	1.00	0.97	0.86	1.00	0.91	0.86	0.91	0.91	0.91	1.00
Frt	1.00	1.00	0.85	1.00	1.00	0.85	1.00	1.00	0.85	1.00	1.00	0.85
Flt Protected	0.95	1.00	1.00	0.95	1.00	1.00	0.95	0.98	1.00	0.95	0.97	1.00
Satd. Flow (prot)	3433	6408	1583	3433	6408	1583	1610	3148	1441	1610	3274	1583
Flt Permitted	0.95	1.00	1.00	0.95	1.00	1.00	0.95	0.98	1.00	0.95	0.97	1.00
Satd. Flow (perm)	3433	6408	1583	3433	6408	1583	1610	3148	1441	1610	3274	1583
Volume (vph)	120	3056	10	427	1999	198	7	5	53	149	53	62
Peak-hour factor, PHF	0.55	0.88	0.58	0.73	0.82	0.76	0.50	0.44	0.91	0.53	0.91	0.78
Adj. Flow (vph)	218	3473	17	585	2438	261	14	11	58	281	58	79
RTOR Reduction (vph)	0	0	8	0	0	0	0	0	0	0	0	0
Lane Group Flow (vph)	218	3473	9	585	2438	261	8	17	58	141	198	79
Turn Type	Prot		Perm	Prot		Free	Split		Free	Split		Free
Protected Phases	1	6		5	2		4	4		3	3	
Permitted Phases			6			Free			Free			Free
Actuated Green, G (s)	8.2	63.2	63.2	19.3	74.3	125.0	3.6	3.6	125.0	10.9	10.9	125.0
Effective Green, g (s)	12.2	67.2	67.2	23.3	78.3	125.0	7.6	7.6	125.0	14.9	14.9	125.0
Actuated g/C Ratio	0.10	0.54	0.54	0.19	0.63	1.00	0.06	0.06	1.00	0.12	0.12	1.00
Clearance Time (s)	7.0	7.0	7.0	7.0	7.0		7.0	7.0		7.0	7.0	
Vehicle Extension (s)	2.0	3.0	3.0	2.0	3.0		3.0	3.0		3.0	3.0	
Lane Grp Cap (vph)	335	3445	851	640	4014	1583	98	191	1441	192	390	1583
v/s Ratio Prot	0.06	c0.54		c0.17	0.38		0.00	0.01		c0.09	0.06	
v/s Ratio Perm			0.01			c0.16			0.04			0.05
v/c Ratio	0.65	1.01	0.01	0.91	0.61	0.16	0.08	0.09	0.04	0.73	0.51	0.05
Uniform Delay, d1	54.3	28.9	13.4	49.9	14.1	0.0	55.4	55.4	0.0	53.1	51.6	0.0
Progression Factor	1.00	1.00	1.00	1.00	1.00	1.00	1.00	1.00	1.00	1.00	1.00	1.00
Incremental Delay, d2	3.4	17.3	0.0	17.3	0.7	0.2	0.4	0.2	0.1	13.5	1.0	0.1
Delay (s)	57.8	46.2	13.5	67.2	14.8	0.2	55.8	55.6	0.1	66.7	52.7	0.1
Level of Service	E	D	B	E	B	A	E	E	A	E	D	A
Approach Delay (s)		46.8			23.0			16.8			47.4	
Approach LOS		D			C			B			D	

Intersection Summary

HCM Average Control Delay	36.0	HCM Level of Service	D
HCM Volume to Capacity ratio	0.88		
Actuated Cycle Length (s)	125.0	Sum of lost time (s)	9.0
Intersection Capacity Utilization	77.3%	ICU Level of Service	D
Analysis Period (min)	15		

c Critical Lane Group

HCM Signalized Intersection Capacity Analysis
22: Church Road & Rurltan Circle

Kincora
Existing Conditions (2008)

Movement	EBL	EBT	EBR	WBL	WBT	WBR	NBL	NBT	NBR	SBL	SBT	SBR
Lane Configurations												
Ideal Flow (vphpl)	1900	1900	1900	1900	1900	1900	1900	1900	1900	1900	1900	1900
Total Lost time (s)		3.0		3.0	3.0			3.0	3.0		3.0	
Lane Util. Factor		0.95		1.00	0.95			1.00	1.00		1.00	
Frt		0.97		1.00	1.00			1.00	0.85		0.93	
Flt Protected		1.00		0.95	1.00			0.96	1.00		0.99	
Satd. Flow (prot)		3431		1770	3531			1780	1583		1704	
Flt Permitted		0.84		0.11	1.00			0.96	1.00		0.99	
Satd. Flow (perm)		2898		204	3531			1780	1583		1704	
Volume (vph)	24	804	188	218	1042	7	118	3	144	4	3	14
Peak-hour factor, PHF	0.55	0.91	0.85	0.73	0.82	0.35	0.70	0.25	0.86	0.50	0.38	0.70
Adj. Flow (vph)	44	884	221	299	1271	20	169	12	167	8	8	20
RTOR Reduction (vph)	0	20	0	0	1	0	0	0	0	0	18	0
Lane Group Flow (vph)	0	1129	0	299	1290	0	0	181	167	0	18	0
Turn Type	Perm			pm+pt			Split		pm+ov	Split		
Protected Phases		6		5	2		4	4	5	8	8	
Permitted Phases	6			2					4			
Actuated Green, G (s)		36.0		51.3	51.3			11.8	21.6		4.1	
Effective Green, g (s)		39.0		54.3	54.3			14.8	27.1		7.1	
Actuated g/C Ratio		0.46		0.64	0.64			0.17	0.32		0.08	
Clearance Time (s)		6.0		5.5	6.0			6.0	5.5		6.0	
Vehicle Extension (s)		4.0		2.0	4.0			3.0	2.0		3.0	
Lane Grp Cap (vph)		1327		356	2250			309	504		142	
v/s Ratio Prot				c0.12	0.37			c0.10	0.05		c0.01	
v/s Ratio Perm		0.39		c0.41					0.06			
v/c Ratio		0.85		0.84	0.57			0.59	0.33		0.12	
Uniform Delay, d1		20.5		20.0	8.8			32.4	22.1		36.2	
Progression Factor		1.00		1.00	1.00			1.00	1.00		1.00	
Incremental Delay, d2		5.7		15.2	0.4			2.8	0.1		0.4	
Delay (s)		26.2		35.2	9.3			35.2	22.3		36.6	
Level of Service		C		D	A			D	C		D	
Approach Delay (s)		26.2			14.1			29.0			36.8	
Approach LOS		C			B			C			D	

Intersection Summary

HCM Average Control Delay	20.5	HCM Level of Service	C
HCM Volume to Capacity ratio	0.72		
Actuated Cycle Length (s)	85.2	Sum of lost time (s)	9.0
Intersection Capacity Utilization	81.3%	ICU Level of Service	D
Analysis Period (min)	15		

c Critical Lane Group

Movement	EBL	EBT	WBT	WBR	SBL	SBR
Lane Configurations						
Ideal Flow (vphpl)	1900	1900	1900	1900	1900	1900
Total Lost time (s)	3.0	3.0	3.0	3.0	3.0	3.0
Lane Util. Factor	0.97	0.95	0.91	0.91	0.97	1.00
Frt	1.00	1.00	0.98	0.85	1.00	0.85
Flt Protected	0.95	1.00	1.00	1.00	0.95	1.00
Satd. Flow (prot)	3433	3539	3318	1441	3433	1583
Flt Permitted	0.95	1.00	1.00	1.00	0.95	1.00
Satd. Flow (perm)	3433	3539	3318	1441	3433	1583
Volume (vph)	564	398	364	351	278	522
Peak-hour factor, PHF	0.94	0.93	0.95	0.86	0.83	0.85
Adj. Flow (vph)	600	428	383	408	335	614
RTOR Reduction (vph)	0	0	9	20	0	447
Lane Group Flow (vph)	600	428	437	325	335	167
Turn Type	Prot			pm+ov		Perm
Protected Phases	5	2	6	4	4	
Permitted Phases				6		4
Actuated Green, G (s)	16.5	41.4	17.9	32.1	14.2	14.2
Effective Green, g (s)	20.5	45.4	21.9	40.6	18.7	18.7
Actuated g/C Ratio	0.29	0.65	0.31	0.58	0.27	0.27
Clearance Time (s)	7.0	7.0	7.0	7.5	7.5	7.5
Vehicle Extension (s)	2.0	3.0	3.0	3.0	3.0	3.0
Lane Grp Cap (vph)	1004	2292	1037	896	916	422
v/s Ratio Prot	c0.17	0.12	c0.13	c0.10	0.10	
v/s Ratio Perm				0.13		0.11
v/c Ratio	0.60	0.19	0.42	0.36	0.37	0.40
Uniform Delay, d1	21.3	5.0	19.1	7.9	20.9	21.1
Progression Factor	1.00	1.00	1.00	1.00	1.00	1.00
Incremental Delay, d2	0.6	0.0	0.3	0.3	0.2	0.6
Delay (s)	21.9	5.0	19.4	8.1	21.1	21.7
Level of Service	C	A	B	A	C	C
Approach Delay (s)		14.9	14.5		21.5	
Approach LOS		B	B		C	

Intersection Summary			
HCM Average Control Delay	17.0	HCM Level of Service	B
HCM Volume to Capacity ratio	0.46		
Actuated Cycle Length (s)	70.1	Sum of lost time (s)	6.0
Intersection Capacity Utilization	52.8%	ICU Level of Service	A
Analysis Period (min)	15		

c Critical Lane Group

HCM Signalized Intersection Capacity Analysis
1: Route 7 & Janelia Farm Blvd.

Kincora
Existing Conditions (2008)

Movement	EBL	EBT	EBR	WBL	WBT	WBR	NBL	NBT	NBR	SBL	SBT	SBR
Lane Configurations												
Ideal Flow (vphpl)	1900	1900	1900	1900	1900	1900	1900	1900	1900	1900	1900	1900
Total Lost time (s)	3.0	3.0	3.0	3.0	3.0	3.0	3.0	3.0	3.0	3.0	3.0	
Lane Util. Factor	0.97	0.86	1.00	0.97	0.86	1.00	0.97	1.00	1.00	0.97	0.95	
Frt	1.00	1.00	0.85	1.00	1.00	0.85	1.00	1.00	0.85	1.00	0.99	
Flt Protected	0.95	1.00	1.00	0.95	1.00	1.00	0.95	1.00	1.00	0.95	1.00	
Satd. Flow (prot)	3433	6225	1583	3433	6225	1583	3433	1863	1583	3433	3488	
Flt Permitted	0.95	1.00	1.00	0.95	1.00	1.00	0.95	1.00	1.00	0.95	1.00	
Satd. Flow (perm)	3433	6225	1583	3433	6225	1583	3433	1863	1583	3433	3488	
Volume (vph)	4	2161	222	497	3512	321	327	70	278	317	124	10
Peak-hour factor, PHF	0.50	0.92	0.86	0.87	0.97	0.91	0.91	0.92	0.87	0.89	0.82	0.63
Adj. Flow (vph)	8	2349	252	571	3621	353	359	76	320	356	151	16
RTOR Reduction (vph)	0	0	0	0	0	82	0	0	4	0	6	0
Lane Group Flow (vph)	8	2349	252	571	3621	271	359	76	316	356	161	0
Heavy Vehicles (%)	2%	5%	2%	2%	5%	2%	2%	2%	2%	2%	2%	2%
Turn Type	Prot		Free	Prot		pm+ov	Prot		pm+ov	Prot		
Protected Phases	1	6		5	2	3	7	4	5	3	8	
Permitted Phases			Free			2			4			
Actuated Green, G (s)	1.0	53.6	121.0	17.2	69.8	84.8	15.0	7.2	24.4	15.0	7.2	
Effective Green, g (s)	5.0	57.6	121.0	21.2	73.8	92.8	19.0	11.2	32.4	19.0	11.2	
Actuated g/C Ratio	0.04	0.48	1.00	0.18	0.61	0.77	0.16	0.09	0.27	0.16	0.09	
Clearance Time (s)	7.0	7.0		7.0	7.0	7.0	7.0	7.0	7.0	7.0	7.0	
Vehicle Extension (s)	2.0	3.0		2.0	3.0	3.0	2.0	2.0	2.0	3.0	3.0	
Lane Grp Cap (vph)	142	2963	1583	601	3797	1253	539	172	463	539	323	
v/s Ratio Prot	0.00	0.38		c0.17	c0.58	0.03	c0.10	0.04	c0.12	0.10	0.05	
v/s Ratio Perm			0.16			0.14			0.08			
v/c Ratio	0.06	0.79	0.16	0.95	0.95	0.22	0.67	0.44	0.68	0.66	0.50	
Uniform Delay, d1	55.7	26.7	0.0	49.4	22.0	3.9	48.0	51.9	39.7	48.0	52.2	
Progression Factor	1.00	1.00	1.00	1.00	1.00	1.00	1.00	1.00	1.00	1.00	1.00	
Incremental Delay, d2	0.1	2.3	0.2	24.7	7.2	0.1	2.4	0.7	3.3	3.0	1.2	
Delay (s)	55.8	28.9	0.2	74.1	29.2	4.0	50.4	52.6	43.0	51.0	53.4	
Level of Service	E	C	A	E	C	A	D	D	D	D	D	
Approach Delay (s)		26.3			32.9			47.5			51.8	
Approach LOS		C			C			D			D	

Intersection Summary

HCM Average Control Delay	33.3	HCM Level of Service	C
HCM Volume to Capacity ratio	0.85		
Actuated Cycle Length (s)	121.0	Sum of lost time (s)	6.0
Intersection Capacity Utilization	83.3%	ICU Level of Service	E
Analysis Period (min)	15		

c Critical Lane Group

HCM Signalized Intersection Capacity Analysis
2: Route 7 & Smith Circle

Kincora
Existing Conditions (2008)

Movement	EBL	EBT	EBR	WBL	WBT	WBR	NBL	NBT	NBR	SBL	SBT	SBR
Lane Configurations												
Ideal Flow (vphpl)	1900	1900	1900	1900	1900	1900	1900	1900	1900	1900	1900	1900
Total Lost time (s)	3.0	3.0	3.0	3.0	3.0	3.0	3.0	3.0	3.0		3.0	
Lane Util. Factor	1.00	0.86	1.00	0.97	0.86	1.00	0.95	0.95	1.00		1.00	
Frt	1.00	1.00	0.85	1.00	1.00	0.85	1.00	1.00	0.85		0.94	
Flt Protected	0.95	1.00	1.00	0.95	1.00	1.00	0.95	0.97	1.00		0.98	
Satd. Flow (prot)	1770	6225	1583	3433	6225	1583	1681	1709	1583		1724	
Flt Permitted	0.95	1.00	1.00	0.95	1.00	1.00	0.95	0.97	1.00		0.98	
Satd. Flow (perm)	1770	6225	1583	3433	6225	1583	1681	1709	1583		1724	
Volume (vph)	201	2541	14	262	4294	18	23	4	231	14	7	13
Peak-hour factor, PHF	0.48	0.87	0.54	0.95	0.98	0.71	0.52	0.50	0.90	0.70	0.58	0.54
Adj. Flow (vph)	419	2921	26	276	4382	25	44	8	257	20	12	24
RTOR Reduction (vph)	0	0	6	0	0	7	0	0	0	0	15	0
Lane Group Flow (vph)	419	2921	20	276	4382	18	25	27	257	0	41	0
Heavy Vehicles (%)	2%	5%	2%	2%	5%	2%	2%	2%	2%	2%	2%	2%
Turn Type	Prot		pm+ov	Prot		pm+ov	Split		Free	Split		
Protected Phases	1	6	4	5	2	3	4	4		3	3	
Permitted Phases			6			2			Free			
Actuated Green, G (s)	23.2	124.7	129.5	14.2	115.7	120.5	4.8	4.8	177.0		4.8	
Effective Green, g (s)	27.2	129.2	138.0	18.2	120.2	129.0	8.8	8.8	177.0		8.8	
Actuated g/C Ratio	0.15	0.73	0.78	0.10	0.68	0.73	0.05	0.05	1.00		0.05	
Clearance Time (s)	7.0	7.5	7.0	7.0	7.5	7.0	7.0	7.0			7.0	
Vehicle Extension (s)	3.0	3.0	3.0	3.0	3.0	3.0	3.0	3.0			3.0	
Lane Grp Cap (vph)	272	4544	1234	353	4227	1181	84	85	1583		86	
v/s Ratio Prot	c0.24	0.47	0.00	0.08	c0.70	0.00	0.01	c0.02			c0.02	
v/s Ratio Perm			0.01			0.01			0.16			
v/c Ratio	1.54	0.64	0.02	0.78	1.04	0.02	0.30	0.32	0.16		0.47	
Uniform Delay, d1	74.9	12.2	4.4	77.5	28.4	6.6	81.1	81.2	0.0		81.8	
Progression Factor	1.00	1.00	1.00	1.00	1.00	1.00	1.00	1.00	1.00		1.00	
Incremental Delay, d2	260.8	0.7	0.0	10.7	24.6	0.0	2.0	2.2	0.2		4.1	
Delay (s)	335.7	12.9	4.4	88.2	53.0	6.6	83.1	83.4	0.2		85.9	
Level of Service	F	B	A	F	D	A	F	F	A		F	
Approach Delay (s)		53.0			54.8			14.2			85.9	
Approach LOS		D			D			B			F	

Intersection Summary

HCM Average Control Delay	52.8	HCM Level of Service	D
HCM Volume to Capacity ratio	1.05		
Actuated Cycle Length (s)	177.0	Sum of lost time (s)	12.0
Intersection Capacity Utilization	92.0%	ICU Level of Service	F
Analysis Period (min)	15		

c Critical Lane Group

Movement	EBL	EBT	EBR	WBL	WBT	WBR	NBL	NBT	NBR	SBL	SBT	SBR
Lane Configurations												
Ideal Flow (vphpl)	1900	1900	1900	1900	1900	1900	1900	1900	1900	1900	1900	1900
Total Lost time (s)	3.0	3.0	3.0	3.0	3.0	3.0	3.0	3.0	3.0	3.0	3.0	3.0
Lane Util. Factor	1.00	0.86	1.00	0.97	0.86	1.00	1.00	1.00	1.00	0.97	1.00	1.00
Frt	1.00	1.00	0.85	1.00	1.00	0.85	1.00	1.00	0.85	1.00	1.00	0.85
Flt Protected	0.95	1.00	1.00	0.95	1.00	1.00	0.95	1.00	1.00	0.95	1.00	1.00
Satd. Flow (prot)	1770	6225	1583	3433	6225	1583	1770	1863	1583	3433	1863	1583
Flt Permitted	0.95	1.00	1.00	0.95	1.00	1.00	0.95	1.00	1.00	0.95	1.00	1.00
Satd. Flow (perm)	1770	6225	1583	3433	6225	1583	1770	1863	1583	3433	1863	1583
Volume (vph)	162	2541	83	147	3957	7	398	90	160	26	63	219
Peak-hour factor, PHF	0.78	0.96	0.73	0.85	0.96	0.58	0.87	0.64	0.95	0.81	0.88	0.94
Adj. Flow (vph)	208	2647	114	173	4122	12	457	141	168	32	72	233
RTOR Reduction (vph)	0	0	0	0	0	3	0	0	0	0	0	1
Lane Group Flow (vph)	208	2647	114	173	4122	9	457	141	168	32	72	232
Heavy Vehicles (%)	2%	5%	2%	2%	5%	2%	2%	2%	2%	2%	2%	2%
Turn Type	Prot		Free	Prot		pm+ov	Prot		Free	Prot		pm+ov
Protected Phases	1	6		5	2	7	3	8		7	4	1
Permitted Phases			Free			2			Free			4
Actuated Green, G (s)	6.0	96.1	160.0	10.0	100.1	104.9	17.0	19.6	160.0	4.8	7.4	13.4
Effective Green, g (s)	10.0	100.6	160.0	14.0	104.6	113.4	21.0	24.6	160.0	8.8	12.4	22.4
Actuated g/C Ratio	0.06	0.63	1.00	0.09	0.65	0.71	0.13	0.15	1.00	0.06	0.08	0.14
Clearance Time (s)	7.0	7.5		7.0	7.5	7.0	7.0	8.0		7.0	8.0	7.0
Vehicle Extension (s)	2.0	3.0		2.0	3.0	2.0	2.0	2.0		2.0	2.0	2.0
Lane Grp Cap (vph)	111	3914	1583	300	4070	1152	232	286	1583	189	144	251
v/s Ratio Prot	c0.12	0.43		c0.05	c0.66	0.00	c0.26	0.08		0.01	0.04	c0.06
v/s Ratio Perm			0.07			0.00			0.11			0.09
v/c Ratio	1.87	0.68	0.07	0.58	1.01	0.01	1.97	0.49	0.11	0.17	0.50	0.92
Uniform Delay, d1	75.0	19.2	0.0	70.2	27.7	6.8	69.5	62.0	0.0	72.1	70.8	68.0
Progression Factor	1.00	1.00	1.00	1.00	1.00	1.00	1.00	1.00	1.00	1.00	1.00	1.00
Incremental Delay, d2	425.4	1.0	0.1	1.7	17.4	0.0	451.6	0.5	0.1	0.2	1.0	36.4
Delay (s)	500.4	20.1	0.1	71.8	45.1	6.8	521.1	62.5	0.1	72.3	71.8	104.4
Level of Service	F	C	A	E	D	A	F	E	A	E	E	F
Approach Delay (s)		53.0			46.0			322.5			94.4	
Approach LOS		D			D			F			F	

Intersection Summary

HCM Average Control Delay	75.7	HCM Level of Service	E
HCM Volume to Capacity ratio	1.18		
Actuated Cycle Length (s)	160.0	Sum of lost time (s)	9.0
Intersection Capacity Utilization	105.0%	ICU Level of Service	G
Analysis Period (min)	15		

c Critical Lane Group

Movement	EBL	EBT	EBR	WBL	WBT	WBR	NBL	NBT	NBR	SBL	SBT	SBR
Lane Configurations												
Ideal Flow (vphpl)	1900	1900	1900	1900	1900	1900	1900	1900	1900	1900	1900	1900
Total Lost time (s)	3.0	3.0	3.0	3.0	3.0	3.0	3.0	3.0		3.0	3.0	
Lane Util. Factor	0.97	0.86	1.00	1.00	0.86	1.00	1.00	1.00		0.97	1.00	
Frt	1.00	1.00	0.85	1.00	1.00	0.85	1.00	0.85		1.00	0.86	
Flt Protected	0.95	1.00	1.00	0.95	1.00	1.00	0.95	1.00		0.95	1.00	
Satd. Flow (prot)	3433	6225	1583	1770	6225	1583	1770	1583		3433	1599	
Flt Permitted	0.95	1.00	1.00	0.95	1.00	1.00	0.95	1.00		0.95	1.00	
Satd. Flow (perm)	3433	6225	1583	1770	6225	1583	1770	1583		3433	1599	
Volume (vph)	236	2485	6	10	4042	497	14	0	16	317	1	55
Peak-hour factor, PHF	0.33	0.88	0.58	0.83	0.95	0.85	0.70	0.25	0.40	0.88	0.25	0.81
Adj. Flow (vph)	715	2824	10	12	4255	585	20	0	40	360	4	68
RTOR Reduction (vph)	0	0	2	0	0	26	0	39	0	0	62	0
Lane Group Flow (vph)	715	2824	8	12	4255	559	20	1	0	360	10	0
Heavy Vehicles (%)	2%	5%	2%	2%	5%	2%	2%	2%	2%	2%	2%	2%
Turn Type	Prot		pm+ov	Prot		pm+ov	Split			Split		
Protected Phases	1	6	3	5	2	4	3	3		4	4	
Permitted Phases			6			2						
Actuated Green, G (s)	23.0	125.6	127.2	4.0	106.6	118.4	1.6	1.6		11.8	11.8	
Effective Green, g (s)	27.0	130.6	136.2	8.0	111.6	127.4	5.6	5.6		15.8	15.8	
Actuated g/C Ratio	0.16	0.76	0.79	0.05	0.65	0.74	0.03	0.03		0.09	0.09	
Clearance Time (s)	7.0	8.0	7.0	7.0	8.0	7.0	7.0	7.0		7.0	7.0	
Vehicle Extension (s)	3.0	3.0	3.0	3.0	3.0	3.0	3.0	3.0		3.0	3.0	
Lane Grp Cap (vph)	539	4727	1281	82	4039	1173	58	52		315	147	
v/s Ratio Prot	c0.21	0.45	0.00	0.01	c0.68	0.04	c0.01	0.00		c0.10	0.01	
v/s Ratio Perm			0.00			0.31						
v/c Ratio	1.33	0.60	0.01	0.15	1.05	0.48	0.34	0.03		1.14	0.07	
Uniform Delay, d1	72.5	9.1	3.7	78.7	30.2	8.9	81.4	80.6		78.1	71.4	
Progression Factor	1.00	1.00	1.00	1.00	1.00	1.00	1.00	1.00		1.00	1.00	
Incremental Delay, d2	159.4	0.6	0.0	0.8	30.9	0.3	3.6	0.2		95.2	0.2	
Delay (s)	231.9	9.7	3.7	79.5	61.1	9.2	85.0	80.8		173.3	71.6	
Level of Service	F	A	A	E	E	A	F	F		F	E	
Approach Delay (s)		54.4			54.9			82.2			156.3	
Approach LOS		D			D			F			F	

Intersection Summary

HCM Average Control Delay	59.8	HCM Level of Service	E
HCM Volume to Capacity ratio	1.08		
Actuated Cycle Length (s)	172.0	Sum of lost time (s)	12.0
Intersection Capacity Utilization	92.6%	ICU Level of Service	F
Analysis Period (min)	15		

c Critical Lane Group

HCM Signalized Intersection Capacity Analysis
5: Route 7 & Countryside Blvd.

Kincora
Existing Conditions (2008)

Movement	EBL	EBT	EBR	WBL	WBT	WBR	NBL	NBT	NBR	SBL	SBT	SBR
Lane Configurations												
Ideal Flow (vphpl)	1900	1900	1900	1900	1900	1900	1900	1900	1900	1900	1900	1900
Total Lost time (s)	3.0	3.0	3.0	3.0	3.0	3.0	3.0	3.0	3.0	3.0	3.0	3.0
Lane Util. Factor	0.97	0.86	1.00	0.97	0.86	1.00	0.97	0.95	1.00	0.97	0.95	1.00
Frt	1.00	1.00	0.85	1.00	1.00	0.85	1.00	1.00	0.85	1.00	1.00	0.85
Flt Protected	0.95	1.00	1.00	0.95	1.00	1.00	0.95	1.00	1.00	0.95	1.00	1.00
Satd. Flow (prot)	3433	6408	1583	3433	6408	1583	3433	3539	1583	3433	3539	1583
Flt Permitted	0.95	1.00	1.00	0.95	1.00	1.00	0.95	1.00	1.00	0.95	1.00	1.00
Satd. Flow (perm)	3433	6408	1583	3433	6408	1583	3433	3539	1583	3433	3539	1583
Volume (vph)	451	1591	143	624	2118	187	183	148	360	186	163	286
Peak-hour factor, PHF	0.66	0.86	0.87	0.70	0.94	0.89	0.83	0.80	0.89	0.72	0.87	0.72
Adj. Flow (vph)	683	1850	164	891	2253	210	220	185	404	258	187	397
RTOR Reduction (vph)	0	0	0	0	0	35	0	0	0	0	0	5
Lane Group Flow (vph)	683	1850	164	891	2253	175	220	185	404	258	187	392
Turn Type	Prot		Free	Prot		pm+ov	Prot		Free	Prot		pm+ov
Protected Phases	1	6		5	2	3	7	4		3	8	1
Permitted Phases			Free			2			Free			8
Actuated Green, G (s)	31.8	51.6	150.0	41.4	61.2	73.8	10.0	16.4	150.0	12.6	19.0	50.8
Effective Green, g (s)	35.8	55.6	150.0	45.4	65.2	81.8	14.0	20.4	150.0	16.6	23.0	58.8
Actuated g/C Ratio	0.24	0.37	1.00	0.30	0.43	0.55	0.09	0.14	1.00	0.11	0.15	0.39
Clearance Time (s)	7.0	7.0		7.0	7.0	7.0	7.0	7.0		7.0	7.0	7.0
Vehicle Extension (s)	2.0	2.0		3.0	2.0	2.0	2.0	2.0		2.0	2.0	2.0
Lane Grp Cap (vph)	819	2375	1583	1039	2785	895	320	481	1583	380	543	652
v/s Ratio Prot	0.20	0.29		c0.26	c0.35	0.02	0.06	0.05		c0.08	0.05	c0.14
v/s Ratio Perm			0.10			0.09			c0.26			0.10
v/c Ratio	0.83	0.78	0.10	0.86	0.81	0.20	0.69	0.38	0.26	0.68	0.34	0.60
Uniform Delay, d1	54.3	41.8	0.0	49.3	37.0	17.4	65.9	59.1	0.0	64.1	56.8	36.3
Progression Factor	1.00	1.00	1.00	1.00	1.00	1.00	1.00	1.00	1.00	1.00	1.00	1.00
Incremental Delay, d2	7.0	2.6	0.1	7.1	2.7	0.0	4.8	0.2	0.4	3.8	0.1	1.1
Delay (s)	61.3	44.4	0.1	56.4	39.6	17.4	70.7	59.3	0.4	67.9	56.9	37.4
Level of Service	E	D	A	E	D	B	E	E	A	E	E	D
Approach Delay (s)		46.0			42.7			33.0			51.1	
Approach LOS		D			D			C			D	

Intersection Summary			
HCM Average Control Delay	43.7	HCM Level of Service	D
HCM Volume to Capacity ratio	0.77		
Actuated Cycle Length (s)	150.0	Sum of lost time (s)	6.0
Intersection Capacity Utilization	67.2%	ICU Level of Service	C
Analysis Period (min)	15		

c Critical Lane Group

HCM Signalized Intersection Capacity Analysis
6: Route 7 & Palisade Parkway

Kincora
Existing Conditions (2008)

Movement	EBL	EBT	EBR	WBL	WBT	WBR	NBL	NBT	NBR	SBL	SBT	SBR
Lane Configurations												
Ideal Flow (vphpl)	1900	1900	1900	1900	1900	1900	1900	1900	1900	1900	1900	1900
Total Lost time (s)	3.0	3.0	3.0	3.0	3.0	3.0	3.0	3.0	3.0	3.0	3.0	3.0
Lane Util. Factor	0.97	0.86	1.00	1.00	0.86	1.00	0.97	1.00	1.00	0.97	1.00	1.00
Frt	1.00	1.00	0.85	1.00	1.00	0.85	1.00	1.00	0.85	1.00	1.00	0.85
Flt Protected	0.95	1.00	1.00	0.95	1.00	1.00	0.95	1.00	1.00	0.95	1.00	1.00
Satd. Flow (prot)	3433	6408	1583	1770	6408	1583	3433	1863	1583	3433	1863	1583
Flt Permitted	0.95	1.00	1.00	0.95	1.00	1.00	0.95	1.00	1.00	0.95	1.00	1.00
Satd. Flow (perm)	3433	6408	1583	1770	6408	1583	3433	1863	1583	3433	1863	1583
Volume (vph)	283	1719	135	74	2304	161	391	97	234	225	77	234
Peak-hour factor, PHF	0.71	0.90	0.82	0.77	0.96	0.81	0.79	0.87	0.76	0.92	0.96	0.87
Adj. Flow (vph)	399	1910	165	96	2400	199	495	111	308	245	80	269
RTOR Reduction (vph)	0	0	0	0	0	0	0	0	90	0	0	0
Lane Group Flow (vph)	399	1910	165	96	2400	199	495	111	218	245	80	269
Turn Type	Prot		Free	Prot		Free	Split		pm+ov	Split		pm+ov
Protected Phases	1	6		5	2		4	4	5	3	3	1
Permitted Phases			Free			Free			4			3
Actuated Green, G (s)	7.0	47.5	120.0	8.5	49.0	120.0	22.6	22.6	31.1	13.4	13.4	20.4
Effective Green, g (s)	11.0	51.5	120.0	12.5	53.0	120.0	26.6	26.6	39.1	17.4	17.4	28.4
Actuated g/C Ratio	0.09	0.43	1.00	0.10	0.44	1.00	0.22	0.22	0.33	0.14	0.14	0.24
Clearance Time (s)	7.0	7.0		7.0	7.0		7.0	7.0	7.0	7.0	7.0	7.0
Vehicle Extension (s)	2.0	4.0		2.0	4.0		3.0	3.0	2.0	3.0	3.0	2.0
Lane Grp Cap (vph)	315	2750	1583	184	2830	1583	761	413	555	498	270	375
v/s Ratio Prot	c0.12	0.30		0.05	c0.37		c0.14	0.06	0.04	0.07	0.04	c0.07
v/s Ratio Perm			0.10			c0.13			0.10			0.10
v/c Ratio	1.27	0.69	0.10	0.52	0.85	0.13	0.65	0.27	0.39	0.49	0.30	0.72
Uniform Delay, d1	54.5	27.9	0.0	50.9	29.9	0.0	42.5	38.7	31.3	47.2	45.8	42.1
Progression Factor	1.00	1.00	1.00	1.00	1.00	1.00	1.00	1.00	1.00	1.00	1.00	1.00
Incremental Delay, d2	142.8	1.5	0.1	1.2	3.4	0.2	2.0	0.4	0.2	0.8	0.6	5.4
Delay (s)	197.3	29.3	0.1	52.1	33.3	0.2	44.5	39.0	31.4	48.0	46.4	47.5
Level of Service	F	C	A	D	C	A	D	D	C	D	D	D
Approach Delay (s)		54.5			31.5			39.4			47.6	
Approach LOS		D			C			D			D	

Intersection Summary			
HCM Average Control Delay	42.5	HCM Level of Service	D
HCM Volume to Capacity ratio	0.80		
Actuated Cycle Length (s)	120.0	Sum of lost time (s)	9.0
Intersection Capacity Utilization	69.3%	ICU Level of Service	C
Analysis Period (min)	15		

c Critical Lane Group

HCM Signalized Intersection Capacity Analysis
7: Countryside Blvd. & Algonkian Parkway

Kincora
Existing Conditions (2008)

Movement	WBL	WBR	NBT	NBR	SBL	SBT
Lane Configurations						
Ideal Flow (vphpl)	1900	1900	1900	1900	1900	1900
Total Lost time (s)	3.0	3.0	3.0		3.0	3.0
Lane Util. Factor	1.00	1.00	0.95		1.00	0.95
Frt	1.00	0.85	0.97		1.00	1.00
Flt Protected	0.95	1.00	1.00		0.95	1.00
Satd. Flow (prot)	1770	1583	3435		1770	3539
Flt Permitted	0.95	1.00	1.00		0.19	1.00
Satd. Flow (perm)	1770	1583	3435		363	3539
Volume (vph)	112	262	594	117	250	528
Peak-hour factor, PHF	0.72	0.91	0.87	0.70	0.73	0.87
Adj. Flow (vph)	156	288	683	167	342	607
RTOR Reduction (vph)	0	99	19	0	0	0
Lane Group Flow (vph)	156	189	831	0	342	607
Turn Type		pm+ov			pm+pt	
Protected Phases	4	1	2		1	6
Permitted Phases		4			6	
Actuated Green, G (s)	8.2	18.8	21.1		38.7	38.7
Effective Green, g (s)	12.2	26.8	25.6		43.2	43.2
Actuated g/C Ratio	0.20	0.44	0.42		0.70	0.70
Clearance Time (s)	7.0	7.0	7.5		7.0	7.5
Vehicle Extension (s)	2.0	2.0	2.0		2.0	2.0
Lane Grp Cap (vph)	352	768	1432		590	2490
v/s Ratio Prot	c0.09	0.06	0.24		c0.14	0.17
v/s Ratio Perm		0.06			c0.27	
v/c Ratio	0.44	0.25	0.58		0.58	0.24
Uniform Delay, d1	21.6	10.9	13.8		5.9	3.3
Progression Factor	1.00	1.00	1.00		1.00	1.00
Incremental Delay, d2	0.3	0.1	0.4		0.9	0.0
Delay (s)	21.9	11.0	14.2		6.8	3.3
Level of Service	C	B	B		A	A
Approach Delay (s)	14.8		14.2			4.5
Approach LOS	B		B			A

Intersection Summary			
HCM Average Control Delay	10.2	HCM Level of Service	B
HCM Volume to Capacity ratio	0.55		
Actuated Cycle Length (s)	61.4	Sum of lost time (s)	6.0
Intersection Capacity Utilization	50.2%	ICU Level of Service	A
Analysis Period (min)	15		

c Critical Lane Group

HCM Signalized Intersection Capacity Analysis
8: Winding Road & Algonkian Parkway

Kincora
Existing Conditions (2008)

Movement	EBL	EBT	EBR	WBL	WBT	WBR	NBL	NBT	NBR	SBL	SBT	SBR
Lane Configurations												
Ideal Flow (vphpl)	1900	1900	1900	1900	1900	1900	1900	1900	1900	1900	1900	1900
Total Lost time (s)		4.0	4.0		4.0	4.0	4.0	4.0	4.0	4.0	4.0	4.0
Lane Util. Factor		1.00	1.00		1.00	1.00	1.00	0.95	1.00	1.00	0.95	1.00
Frt		1.00	0.85		1.00	0.85	1.00	1.00	0.85	1.00	1.00	0.85
Flt Protected		0.96	1.00		0.95	1.00	0.95	1.00	1.00	0.95	1.00	1.00
Satd. Flow (prot)		1788	1583		1770	1583	1770	3539	1583	1770	3539	1583
Flt Permitted		0.72	1.00		0.73	1.00	0.38	1.00	1.00	0.33	1.00	1.00
Satd. Flow (perm)		1336	1583		1352	1583	707	3539	1583	622	3539	1583
Volume (vph)	29	2	82	37	0	30	148	732	83	29	533	72
Peak-hour factor, PHF	0.73	0.25	0.79	0.58	0.25	0.75	0.88	0.91	0.80	0.73	0.85	0.82
Adj. Flow (vph)	40	8	104	64	0	40	168	804	104	40	627	88
RTOR Reduction (vph)	0	0	83	0	0	33	0	0	33	0	0	30
Lane Group Flow (vph)	0	48	21	0	64	7	168	804	71	40	627	58
Turn Type	Perm		pm+ov	Perm		pm+ov	pm+pt		Perm	pm+pt		Perm
Protected Phases		4	5		8	1	5	2		1	6	
Permitted Phases	4		4	8		8	2		2	6		6
Actuated Green, G (s)		6.1	12.5		6.1	10.2	65.2	58.8	58.8	60.6	56.5	56.5
Effective Green, g (s)		9.1	18.5		9.1	16.2	71.2	61.8	61.8	66.6	59.5	59.5
Actuated g/C Ratio		0.10	0.21		0.10	0.18	0.79	0.69	0.69	0.74	0.66	0.66
Clearance Time (s)		7.0	7.0		7.0	7.0	7.0	7.0	7.0	7.0	7.0	7.0
Vehicle Extension (s)		2.0	2.0		2.0	2.0	2.0	2.0	2.0	2.0	2.0	2.0
Lane Grp Cap (vph)		135	396		137	355	670	2430	1087	551	2340	1047
v/s Ratio Prot			0.01			0.00	c0.03	c0.23		0.01	0.18	
v/s Ratio Perm		0.04	0.01		c0.05	0.00	0.17		0.05	0.05		0.04
v/c Ratio		0.36	0.05		0.47	0.02	0.25	0.33	0.07	0.07	0.27	0.06
Uniform Delay, d1		37.7	28.7		38.2	30.4	2.4	5.7	4.6	3.1	6.3	5.4
Progression Factor		1.00	1.00		1.00	1.00	1.00	1.00	1.00	1.00	1.00	1.00
Incremental Delay, d2		0.6	0.0		0.9	0.0	0.1	0.4	0.1	0.0	0.3	0.1
Delay (s)		38.3	28.7		39.1	30.4	2.4	6.1	4.7	3.2	6.6	5.5
Level of Service		D	C		D	C	A	A	A	A	A	A
Approach Delay (s)		31.8			35.7			5.4			6.3	
Approach LOS		C			D			A			A	

Intersection Summary			
HCM Average Control Delay	9.1	HCM Level of Service	A
HCM Volume to Capacity ratio	0.35		
Actuated Cycle Length (s)	90.0	Sum of lost time (s)	12.0
Intersection Capacity Utilization	42.3%	ICU Level of Service	A
Analysis Period (min)	15		

c Critical Lane Group

Intersection Sign configuration not allowed in HCM analysis.

Movement	EBL	EBT	EBR	WBL	WBT	WBR	NBL	NBT	NBR	SBL	SBT	SBR
Lane Configurations												
Ideal Flow (vphpl)	1900	1900	1900	1900	1900	1900	1900	1900	1900	1900	1900	1900
Total Lost time (s)	3.0	3.0	3.0	3.0	3.0	3.0	3.0	3.0	3.0	3.0	3.0	3.0
Lane Util. Factor	1.00	0.95	1.00	0.97	0.95	1.00	0.97	0.95	1.00	0.97	0.95	1.00
Frt	1.00	1.00	0.85	1.00	1.00	0.85	1.00	1.00	0.85	1.00	1.00	0.85
Flt Protected	0.95	1.00	1.00	0.95	1.00	1.00	0.95	1.00	1.00	0.95	1.00	1.00
Satd. Flow (prot)	1770	3539	1583	3433	3539	1583	3433	3539	1583	3433	3539	1583
Flt Permitted	0.95	1.00	1.00	0.95	1.00	1.00	0.95	1.00	1.00	0.95	1.00	1.00
Satd. Flow (perm)	1770	3539	1583	3433	3539	1583	3433	3539	1583	3433	3539	1583
Volume (vph)	61	107	239	112	196	183	332	709	142	139	540	88
Peak-hour factor, PHF	0.85	0.86	0.93	0.78	0.89	0.86	0.91	0.98	0.87	0.87	0.77	0.92
Adj. Flow (vph)	72	124	257	144	220	213	365	723	163	160	701	96
RTOR Reduction (vph)	0	0	0	0	0	0	0	0	0	0	0	0
Lane Group Flow (vph)	72	124	257	144	220	213	365	723	163	160	701	96
Turn Type	Prot		Free	Prot		Free	Prot		Free	Prot		Free
Protected Phases	7	4		3	8		5	2		1	6	
Permitted Phases			Free			Free			Free			Free
Actuated Green, G (s)	7.8	16.1	98.4	7.7	16.0	98.4	14.9	38.5	98.4	8.1	31.7	98.4
Effective Green, g (s)	11.8	20.1	98.4	11.7	20.0	98.4	18.9	42.5	98.4	12.1	35.7	98.4
Actuated g/C Ratio	0.12	0.20	1.00	0.12	0.20	1.00	0.19	0.43	1.00	0.12	0.36	1.00
Clearance Time (s)	7.0	7.0		7.0	7.0		7.0	7.0		7.0	7.0	
Vehicle Extension (s)	3.0	3.0		3.0	3.0		3.0	5.0		3.0	5.0	
Lane Grp Cap (vph)	212	723	1583	408	719	1583	659	1529	1583	422	1284	1583
v/s Ratio Prot	0.04	0.04		c0.04	c0.06		c0.11	0.20		0.05	c0.20	
v/s Ratio Perm			c0.16			0.13			0.10			0.06
v/c Ratio	0.34	0.17	0.16	0.35	0.31	0.13	0.55	0.47	0.10	0.38	0.55	0.06
Uniform Delay, d1	39.7	32.3	0.0	39.9	33.3	0.0	35.9	20.0	0.0	39.7	24.9	0.0
Progression Factor	1.00	1.00	1.00	1.00	1.00	1.00	1.00	1.00	1.00	1.00	1.00	1.00
Incremental Delay, d2	1.0	0.1	0.2	0.5	0.2	0.2	1.0	0.5	0.1	0.6	0.8	0.1
Delay (s)	40.7	32.4	0.2	40.4	33.5	0.2	37.0	20.4	0.1	40.3	25.7	0.1
Level of Service	D	C	A	D	C	A	D	C	A	D	C	A
Approach Delay (s)		15.5			22.9			22.6			25.6	
Approach LOS		B			C			C			C	

Intersection Summary

HCM Average Control Delay	22.6	HCM Level of Service	C
HCM Volume to Capacity ratio	0.47		
Actuated Cycle Length (s)	98.4	Sum of lost time (s)	12.0
Intersection Capacity Utilization	57.1%	ICU Level of Service	B
Analysis Period (min)	15		

c Critical Lane Group

Movement	EBL	EBR	NBL	NBT	SBT	SBR
Lane Configurations						
Sign Control	Stop			Free	Free	
Grade	0%			0%	0%	
Volume (veh/h)	47	19	10	878	301	19
Peak Hour Factor	0.69	0.48	0.50	0.87	0.85	0.53
Hourly flow rate (vph)	68	40	20	1009	354	36
Pedestrians						
Lane Width (ft)						
Walking Speed (ft/s)						
Percent Blockage						
Right turn flare (veh)						
Median type	None					
Median storage veh)						
Upstream signal (ft)						
pX, platoon unblocked						
vC, conflicting volume	1421	372	390			
vC1, stage 1 conf vol						
vC2, stage 2 conf vol						
vCu, unblocked vol	1421	372	390			
tC, single (s)	6.4	6.2	4.1			
tC, 2 stage (s)						
tF (s)	3.5	3.3	2.2			
p0 queue free %	54	94	98			
cM capacity (veh/h)	148	674	1169			

Direction, Lane #	EB 1	NB 1	SB 1
Volume Total	108	1029	390
Volume Left	68	20	0
Volume Right	40	0	36
cSH	207	1169	1700
Volume to Capacity	0.52	0.02	0.23
Queue Length 95th (ft)	67	1	0
Control Delay (s)	39.8	0.5	0.0
Lane LOS	E	A	
Approach Delay (s)	39.8	0.5	0.0
Approach LOS	E		

Intersection Summary			
Average Delay	3.1		
Intersection Capacity Utilization	64.6%	ICU Level of Service	C
Analysis Period (min)	15		

Movement	WBL	WBR	NBT	NBR	SBL	SBT
Lane Configurations						
Ideal Flow (vphpl)	1900	1900	1900	1900	1900	1900
Total Lost time (s)	3.0	3.0	3.0	3.0	3.0	3.0
Lane Util. Factor	0.97	1.00	0.91	1.00	1.00	0.91
Frt	1.00	0.85	1.00	0.85	1.00	1.00
Flt Protected	0.95	1.00	1.00	1.00	0.95	1.00
Satd. Flow (prot)	3433	1583	5085	1583	1770	5085
Flt Permitted	0.95	1.00	1.00	1.00	0.95	1.00
Satd. Flow (perm)	3433	1583	5085	1583	1770	5085
Volume (vph)	440	439	3871	323	323	1753
Peak-hour factor, PHF	0.87	0.94	0.96	0.83	0.84	0.93
Adj. Flow (vph)	506	467	4032	389	385	1885
RTOR Reduction (vph)	0	0	0	0	0	0
Lane Group Flow (vph)	506	467	4032	389	385	1885
Turn Type		Free		Free	Prot	
Protected Phases	4		2		1	6
Permitted Phases		Free		Free		
Actuated Green, G (s)	6.5	200.0	145.5	200.0	26.0	178.5
Effective Green, g (s)	11.0	200.0	150.0	200.0	30.0	183.0
Actuated g/C Ratio	0.06	1.00	0.75	1.00	0.15	0.92
Clearance Time (s)	7.5		7.5		7.0	7.5
Vehicle Extension (s)	3.0		6.0		3.0	6.0
Lane Grp Cap (vph)	189	1583	3814	1583	266	4653
v/s Ratio Prot	c0.15		c0.79		c0.22	0.37
v/s Ratio Perm		0.29		0.25		
v/c Ratio	2.68	0.30	1.06	0.25	1.45	0.41
Uniform Delay, d1	94.5	0.0	25.0	0.0	85.0	1.1
Progression Factor	0.91	1.00	1.00	1.00	1.00	1.00
Incremental Delay, d2	768.2	0.4	32.6	0.4	221.2	0.3
Delay (s)	854.5	0.4	57.6	0.4	306.2	1.4
Level of Service	F	A	E	A	F	A
Approach Delay (s)	444.6		52.6			53.1
Approach LOS	F		D			D

Intersection Summary			
HCM Average Control Delay	102.5	HCM Level of Service	F
HCM Volume to Capacity ratio	1.21		
Actuated Cycle Length (s)	200.0	Sum of lost time (s)	9.0
Intersection Capacity Utilization	115.2%	ICU Level of Service	H
Analysis Period (min)	15		

c Critical Lane Group

HCM Signalized Intersection Capacity Analysis — Kincora
13: Nokes Blvd. & Atlantic Blvd. — Existing Conditions (2008)

Movement	EBL	EBT	EBR	WBL	WBT	WBR	NBL	NBT	NBR	SBL	SBT	SBR
Lane Configurations												
Ideal Flow (vphpl)	1900	1900	1900	1900	1900	1900	1900	1900	1900	1900	1900	1900
Total Lost time (s)	3.0	3.0	3.0	3.0	3.0	3.0	3.0	3.0	3.0	3.0	3.0	3.0
Lane Util. Factor	0.97	0.95	1.00	0.97	0.95	1.00	0.97	0.95	1.00	0.97	0.95	1.00
Frt	1.00	1.00	0.85	1.00	1.00	0.85	1.00	1.00	0.85	1.00	1.00	0.85
Flt Protected	0.95	1.00	1.00	0.95	1.00	1.00	0.95	1.00	1.00	0.95	1.00	1.00
Satd. Flow (prot)	3433	3539	1583	3433	3539	1583	3433	3539	1583	3433	3539	1583
Flt Permitted	0.95	1.00	1.00	0.95	1.00	1.00	0.95	1.00	1.00	0.95	1.00	1.00
Satd. Flow (perm)	3433	3539	1583	3433	3539	1583	3433	3539	1583	3433	3539	1583
Volume (vph)	211	372	63	223	559	79	131	346	287	33	206	189
Peak-hour factor, PHF	0.73	0.91	0.83	0.94	0.74	0.82	0.57	0.79	0.71	0.83	0.89	0.93
Adj. Flow (vph)	289	409	76	237	755	96	230	438	404	40	231	203
RTOR Reduction (vph)	0	0	0	0	0	0	0	0	236	0	0	0
Lane Group Flow (vph)	289	409	76	237	755	96	230	438	168	40	231	203
Turn Type	Prot		Free	Prot		Free	Prot		pm+ov	Prot		Free
Protected Phases	1	6		5	2		7	4	5	3	8	
Permitted Phases			Free			Free			4			Free
Actuated Green, G (s)	15.6	34.4	100.0	11.6	30.4	100.0	11.4	22.4	34.0	4.1	15.1	100.0
Effective Green, g (s)	19.6	38.4	100.0	15.6	34.4	100.0	15.4	25.9	41.5	8.1	18.6	100.0
Actuated g/C Ratio	0.20	0.38	1.00	0.16	0.34	1.00	0.15	0.26	0.42	0.08	0.19	1.00
Clearance Time (s)	7.0	7.0		7.0	7.0		7.0	6.5	7.0	7.0	6.5	
Vehicle Extension (s)	2.5	4.0		2.5	4.0		2.5	2.5	2.5	2.5	2.5	
Lane Grp Cap (vph)	673	1359	1583	536	1217	1583	529	917	704	278	658	1583
v/s Ratio Prot	c0.08	0.12		0.07	c0.21		c0.07	c0.12	0.04	0.01	0.07	
v/s Ratio Perm			0.05			0.06			0.07			0.13
v/c Ratio	0.43	0.30	0.05	0.44	0.62	0.06	0.43	0.48	0.24	0.14	0.35	0.13
Uniform Delay, d1	35.3	21.5	0.0	38.3	27.4	0.0	38.4	31.3	19.0	42.7	35.4	0.0
Progression Factor	1.22	0.61	1.00	1.00	1.00	1.00	1.00	1.00	1.00	1.00	1.00	1.00
Incremental Delay, d2	0.2	0.3	0.0	0.4	2.4	0.1	0.4	0.3	0.1	0.2	0.2	0.2
Delay (s)	43.3	13.4	0.0	38.7	29.7	0.1	38.8	31.6	19.1	42.9	35.7	0.2
Level of Service	D	B	A	D	C	A	D	C	B	D	D	A
Approach Delay (s)		23.2			29.1			28.4			21.1	
Approach LOS		C			C			C			C	

Intersection Summary

HCM Average Control Delay	26.4	HCM Level of Service	C
HCM Volume to Capacity ratio	0.51		
Actuated Cycle Length (s)	100.0	Sum of lost time (s)	9.0
Intersection Capacity Utilization	48.5%	ICU Level of Service	A
Analysis Period (min)	15		

c Critical Lane Group

HCM Signalized Intersection Capacity Analysis — Kincora
14: Nokes Blvd. & Cascades Parkway — Existing Conditions (2008)

Movement	EBL	EBT	EBR	WBL	WBT	WBR	NBL	NBT	NBR	SBL	SBT	SBR
Lane Configurations												
Ideal Flow (vphpl)	1900	1900	1900	1900	1900	1900	1900	1900	1900	1900	1900	1900
Total Lost time (s)	3.0	3.0	3.0	3.0	3.0	3.0	3.0	3.0	3.0	3.0	3.0	3.0
Lane Util. Factor	0.97	1.00	1.00	1.00	0.95	1.00	0.97	0.95	1.00	1.00	0.95	1.00
Frt	1.00	1.00	0.85	1.00	1.00	0.85	1.00	1.00	0.85	1.00	1.00	0.85
Flt Protected	0.95	1.00	1.00	0.95	1.00	1.00	0.95	1.00	1.00	0.95	1.00	1.00
Satd. Flow (prot)	3433	1863	1583	1770	3539	1583	3433	3539	1583	1770	3539	1583
Flt Permitted	0.95	1.00	1.00	0.95	1.00	1.00	0.95	1.00	1.00	0.95	1.00	1.00
Satd. Flow (perm)	3433	1863	1583	1770	3539	1583	3433	3539	1583	1770	3539	1583
Volume (vph)	329	177	260	238	135	33	244	1187	298	4	848	258
Peak-hour factor, PHF	0.89	0.85	1.00	0.73	0.80	0.83	0.82	0.91	0.89	0.33	0.92	0.78
Adj. Flow (vph)	370	208	260	326	169	40	298	1304	335	12	922	331
RTOR Reduction (vph)	0	0	223	0	0	30	0	0	149	0	0	205
Lane Group Flow (vph)	370	208	37	326	169	10	298	1304	186	12	922	126
Turn Type	Prot		Perm	Prot		Perm	Prot		Perm	Prot		Perm
Protected Phases	7	4		3	8		1	6		5	2	
Permitted Phases			4			8			6			2
Actuated Green, G (s)	10.0	10.0	10.0	20.8	20.8	20.8	10.0	44.1	44.1	2.0	36.1	36.1
Effective Green, g (s)	14.0	15.0	15.0	24.8	25.8	25.8	14.0	48.6	48.6	6.0	40.6	40.6
Actuated g/C Ratio	0.13	0.14	0.14	0.23	0.24	0.24	0.13	0.46	0.46	0.06	0.38	0.38
Clearance Time (s)	7.0	8.0	8.0	7.0	8.0	8.0	7.0	7.5	7.5	7.0	7.5	7.5
Vehicle Extension (s)	3.0	3.0	3.0	3.0	3.0	3.0	3.0	3.0	3.0	3.0	3.0	3.0
Lane Grp Cap (vph)	452	263	223	413	858	384	452	1616	723	100	1350	604
v/s Ratio Prot	c0.11	c0.11		c0.18	0.05		c0.09	c0.37		0.01	0.26	
v/s Ratio Perm			0.02			0.01			0.12			0.08
v/c Ratio	0.82	0.79	0.16	0.79	0.20	0.03	0.66	0.81	0.26	0.12	0.68	0.21
Uniform Delay, d1	45.0	44.2	40.2	38.3	32.1	30.7	43.9	24.9	17.8	47.7	27.5	22.1
Progression Factor	1.00	1.00	1.00	1.00	1.00	1.00	1.00	1.00	1.00	1.00	1.00	1.00
Incremental Delay, d2	11.0	14.9	0.3	9.7	0.1	0.0	3.5	3.1	0.2	0.5	1.4	0.2
Delay (s)	56.0	59.1	40.5	48.0	32.2	30.7	47.4	27.9	18.0	48.2	29.0	22.3
Level of Service	E	E	D	D	C	C	D	C	B	D	C	C
Approach Delay (s)		52.0			41.7			29.2			27.4	
Approach LOS		D			D			C			C	

Intersection Summary

HCM Average Control Delay	34.3	HCM Level of Service	C
HCM Volume to Capacity ratio	0.78		
Actuated Cycle Length (s)	106.4	Sum of lost time (s)	9.0
Intersection Capacity Utilization	77.0%	ICU Level of Service	D
Analysis Period (min)	15		

c Critical Lane Group

Movement	EBL	EBT	EBR	WBL	WBT	WBR	NBL	NBT	NBR	SBL	SBT	SBR
Lane Configurations												
Ideal Flow (vphpl)	1900	1900	1900	1900	1900	1900	1900	1900	1900	1900	1900	1900
Total Lost time (s)	3.0	3.0	3.0	3.0	3.0		3.0	3.0	3.0	3.0	3.0	3.0
Lane Util. Factor	1.00	1.00	1.00	0.97	1.00		0.97	0.91	1.00	1.00	0.91	1.00
Frt	1.00	1.00	0.85	1.00	0.86		1.00	1.00	0.85	1.00	1.00	0.85
Flt Protected	0.95	1.00	1.00	0.95	1.00		0.95	1.00	1.00	0.95	1.00	1.00
Satd. Flow (prot)	1770	1863	1583	3183	1488		3433	5085	1583	1770	5085	1583
Flt Permitted	0.50	1.00	1.00	0.95	1.00		0.95	1.00	1.00	0.95	1.00	1.00
Satd. Flow (perm)	931	1863	1583	3183	1488		3433	5085	1583	1770	5085	1583
Volume (vph)	299	40	673	304	22	272	51	3768	324	156	2108	10
Peak-hour factor, PHF	0.70	0.83	0.85	0.83	0.92	0.95	0.71	0.91	0.90	0.71	0.92	0.83
Adj. Flow (vph)	427	48	792	366	24	283	72	4141	360	220	2291	12
RTOR Reduction (vph)	0	0	5	0	80	0	0	0	0	0	0	4
Lane Group Flow (vph)	427	48	787	366	227	0	72	4141	360	220	2291	8
Heavy Vehicles (%)	2%	2%	2%	10%	10%	10%	2%	2%	2%	2%	2%	2%
Turn Type	pm+pt		pm+ov	Prot			Prot		Free	Prot		pm+ov
Protected Phases	3	8	1	7	4		1	6		5	2	3
Permitted Phases	8		8						Free			2
Actuated Green, G (s)	10.0	4.0	31.0	8.4	6.4		27.0	119.1	170.0	10.0	102.1	108.1
Effective Green, g (s)	18.0	8.0	39.0	12.4	10.4		31.0	123.6	170.0	14.0	106.6	116.6
Actuated g/C Ratio	0.11	0.05	0.23	0.07	0.06		0.18	0.73	1.00	0.08	0.63	0.69
Clearance Time (s)	7.0	7.0	7.0	7.0	7.0		7.0	7.5		7.0	7.5	7.0
Vehicle Extension (s)	2.0	2.0	2.0	2.0	2.0		2.0	3.0		2.0	3.0	2.0
Lane Grp Cap (vph)	148	88	391	232	91		626	3697	1583	146	3189	1114
v/s Ratio Prot	c0.17	0.03	c0.37	0.11	c0.15		0.02	c0.81		0.12	0.45	0.00
v/s Ratio Perm	0.14		0.13						c0.23			0.00
v/c Ratio	2.89	0.55	2.01	1.58	2.50		0.12	1.12	0.23	1.51	0.72	0.01
Uniform Delay, d1	82.2	79.2	65.5	78.8	79.8		58.0	23.2	0.0	78.0	21.5	8.4
Progression Factor	1.00	1.00	1.00	1.00	1.00		1.07	0.60	1.00	1.00	1.00	1.00
Incremental Delay, d2	866.5	3.7	464.3	279.6	705.0		0.0	55.3	0.1	260.2	1.4	0.0
Delay (s)	948.7	82.9	529.8	358.4	784.8		62.1	69.2	0.1	338.2	22.9	8.4
Level of Service	F	F	F	F	F		E	E	A	F	C	A
Approach Delay (s)		654.0			552.9			63.6			50.4	
Approach LOS		F			F			E			D	

Intersection Summary

HCM Average Control Delay	179.2	HCM Level of Service	F
HCM Volume to Capacity ratio	1.47		
Actuated Cycle Length (s)	170.0	Sum of lost time (s)	3.0
Intersection Capacity Utilization	129.3%	ICU Level of Service	H
Analysis Period (min)	15		

c Critical Lane Group

Movement	EBL	EBR	NBL	NBT	SBT	SBR
Lane Configurations						
Ideal Flow (vphpl)	1900	1900	1900	1900	1900	1900
Total Lost time (s)	3.0	3.0	3.0	3.0	3.0	3.0
Lane Util. Factor	1.00	1.00	1.00	0.95	0.95	1.00
Frt	1.00	0.85	1.00	1.00	1.00	0.85
Flt Protected	0.95	1.00	0.95	1.00	1.00	1.00
Satd. Flow (prot)	1770	1583	1770	3539	3539	1583
Flt Permitted	0.95	1.00	0.12	1.00	1.00	1.00
Satd. Flow (perm)	1770	1583	231	3539	3539	1583
Volume (vph)	211	183	136	1471	1116	116
Peak-hour factor, PHF	0.94	0.73	0.87	0.96	0.98	0.71
Adj. Flow (vph)	224	251	156	1532	1139	163
RTOR Reduction (vph)	0	188	0	0	0	44
Lane Group Flow (vph)	224	63	156	1532	1139	119
Turn Type		Perm	pm+pt			pm+ov
Protected Phases	4		1	6	2	4
Permitted Phases		4	6			2
Actuated Green, G (s)	14.8	14.8	46.5	46.5	32.3	47.1
Effective Green, g (s)	18.8	18.8	50.0	50.0	35.8	54.6
Actuated g/C Ratio	0.25	0.25	0.67	0.67	0.48	0.73
Clearance Time (s)	7.0	7.0	7.0	6.5	6.5	7.0
Vehicle Extension (s)	3.0	3.0	4.0	4.0	4.0	3.0
Lane Grp Cap (vph)	445	398	385	2366	1694	1219
v/s Ratio Prot	c0.13		0.06	c0.43	0.32	0.02
v/s Ratio Perm		0.04	0.21			0.05
v/c Ratio	0.50	0.16	0.41	0.65	0.67	0.10
Uniform Delay, d1	24.0	21.8	8.3	7.2	15.0	2.9
Progression Factor	1.00	1.00	1.00	1.00	1.00	1.00
Incremental Delay, d2	0.9	0.2	1.0	0.7	1.2	0.0
Delay (s)	24.9	22.0	9.3	7.9	16.2	3.0
Level of Service	C	C	A	A	B	A
Approach Delay (s)	23.4			8.1	14.5	
Approach LOS	C			A	B	

Intersection Summary

HCM Average Control Delay	12.6	HCM Level of Service	B
HCM Volume to Capacity ratio	0.61		
Actuated Cycle Length (s)	74.8	Sum of lost time (s)	6.0
Intersection Capacity Utilization	60.1%	ICU Level of Service	B
Analysis Period (min)	15		

c Critical Lane Group

HCM Signalized Intersection Capacity Analysis — Kincora
17: Steeplechase Drive & Route 28 — Existing Conditions (2008)

Movement	EBL	EBT	EBR	WBL	WBT	WBR	NBL	NBT	NBR	SBL	SBT	SBR
Lane Configurations												
Ideal Flow (vphpl)	1900	1900	1900	1900	1900	1900	1900	1900	1900	1900	1900	1900
Total Lost time (s)		3.0		3.0		3.0	3.0	3.0	3.0	3.0	3.0	3.0
Lane Util. Factor		1.00		1.00		1.00	1.00	0.91	1.00	1.00	0.91	1.00
Frt		0.95		1.00		0.85	1.00	1.00	0.85	1.00	1.00	0.85
Flt Protected		0.98		0.95		1.00	0.95	1.00	1.00	0.95	1.00	1.00
Satd. Flow (prot)		1734		1770		1583	1770	5085	1583	1770	5085	1583
Flt Permitted		0.90		0.77		1.00	0.95	1.00	1.00	0.95	1.00	1.00
Satd. Flow (perm)		1603		1439		1583	1770	5085	1583	1770	5085	1583
Volume (vph)	4	1	4	313	0	107	14	3887	125	12	2984	3
Peak-hour factor, PHF	0.38	0.25	0.50	0.81	0.25	0.70	0.70	0.95	0.89	0.75	0.92	0.50
Adj. Flow (vph)	11	4	8	386	0	153	20	4092	140	16	3243	6
RTOR Reduction (vph)	0	7	0	0	0	16	0	0	34	0	0	2
Lane Group Flow (vph)	0	16	0	386	0	137	20	4092	106	16	3243	4
Turn Type	Perm			Perm		Perm	Prot		Perm	Prot		Perm
Protected Phases		4			8		1	6		5	2	
Permitted Phases	4			8		8			6			2
Actuated Green, G (s)		22.0		22.0		22.0	4.5	124.5	124.5	2.0	122.0	122.0
Effective Green, g (s)		26.0		26.0		26.0	8.5	129.0	129.0	6.0	126.5	126.5
Actuated g/C Ratio		0.15		0.15		0.15	0.05	0.76	0.76	0.04	0.74	0.74
Clearance Time (s)		7.0		7.0		7.0	7.0	7.5	7.5	7.0	7.5	7.5
Vehicle Extension (s)		5.0		5.0		5.0	2.0	2.0	2.0	2.0	2.0	2.0
Lane Grp Cap (vph)		245		220		242	89	3859	1201	62	3784	1178
v/s Ratio Prot							0.01	c0.80		c0.01	0.64	
v/s Ratio Perm		0.01		c0.27		0.09			0.07			0.00
v/c Ratio		0.07		1.75		0.57	0.22	1.06	0.09	0.26	0.86	0.00
Uniform Delay, d1		61.6		72.0		66.8	77.6	20.5	5.3	79.8	15.4	5.6
Progression Factor		1.00		1.00		1.00	1.00	1.00	1.00	1.03	0.67	0.57
Incremental Delay, d2		0.2		357.6		4.9	0.5	33.8	0.1	0.1	0.3	0.0
Delay (s)		61.9		429.6		71.7	78.1	54.3	5.4	82.6	10.5	3.2
Level of Service		E		F		E	E	D	A	F	B	A
Approach Delay (s)		61.9			328.0			52.8			10.9	
Approach LOS		E			F			D			B	

Intersection Summary			
HCM Average Control Delay	54.2	HCM Level of Service	D
HCM Volume to Capacity ratio	1.12		
Actuated Cycle Length (s)	170.0	Sum of lost time (s)	6.0
Intersection Capacity Utilization	105.8%	ICU Level of Service	G
Analysis Period (min)	15		

c Critical Lane Group

HCM Signalized Intersection Capacity Analysis — Kincora
18: Farmwell Road & Ashburn Village Blvd. — Existing Conditions (2008)

Movement	EBL	EBT	EBR	WBL	WBT	WBR	NBL	NBT	NBR	SBL	SBT	SBR
Lane Configurations												
Ideal Flow (vphpl)	1900	1900	1900	1900	1900	1900	1900	1900	1900	1900	1900	1900
Total Lost time (s)	3.0	3.0	3.0	3.0	3.0	3.0	3.0	3.0	3.0	3.0	3.0	3.0
Lane Util. Factor	1.00	0.91	1.00	0.97	0.91	1.00	1.00	0.95	1.00	0.97	0.95	1.00
Frt	1.00	1.00	0.85	1.00	1.00	0.85	1.00	1.00	0.85	1.00	1.00	0.85
Flt Protected	0.95	1.00	1.00	0.95	1.00	1.00	0.95	1.00	1.00	0.95	1.00	1.00
Satd. Flow (prot)	1770	5085	1583	3433	5085	1583	1770	3539	1583	3433	3539	1583
Flt Permitted	0.95	1.00	1.00	0.95	1.00	1.00	0.95	1.00	1.00	0.95	1.00	1.00
Satd. Flow (perm)	1770	5085	1583	3433	5085	1583	1770	3539	1583	3433	3539	1583
Volume (vph)	214	603	194	216	1476	1036	127	549	106	469	394	128
Peak-hour factor, PHF	0.85	0.90	0.77	0.84	0.81	0.85	0.88	0.92	0.74	0.75	0.80	0.74
Adj. Flow (vph)	252	670	252	257	1822	1219	144	597	143	625	492	173
RTOR Reduction (vph)	0	0	0	0	0	0	0	0	50	0	0	56
Lane Group Flow (vph)	252	670	252	257	1822	1219	144	597	93	625	492	117
Turn Type	Prot		Free	Prot		Free	Prot		pm+ov	Prot		pm+ov
Protected Phases	1	6		5	2		3	8	5	7	4	1
Permitted Phases			Free			Free			8			4
Actuated Green, G (s)	16.9	48.1	135.0	11.8	43.0	135.0	14.4	25.1	36.9	22.5	33.2	50.1
Effective Green, g (s)	20.9	52.1	135.0	15.8	47.0	135.0	18.4	28.6	44.4	26.5	36.7	57.6
Actuated g/C Ratio	0.15	0.39	1.00	0.12	0.35	1.00	0.14	0.21	0.33	0.20	0.27	0.43
Clearance Time (s)	7.0	7.0		7.0	7.0		7.0	6.5	7.0	7.0	6.5	7.0
Vehicle Extension (s)	2.0	3.0		2.0	3.0		2.0	2.0	2.0	2.0	2.0	2.0
Lane Grp Cap (vph)	274	1962	1583	402	1770	1583	241	750	556	674	962	711
v/s Ratio Prot	c0.14	0.13		0.07	c0.36		0.08	0.17	0.02	c0.18	0.14	0.03
v/s Ratio Perm			0.16			c0.77			0.04			0.05
v/c Ratio	0.92	0.34	0.16	0.64	1.03	0.77	0.60	0.80	0.17	0.93	0.51	0.16
Uniform Delay, d1	56.2	29.3	0.0	56.9	44.0	0.0	54.8	50.4	32.2	53.3	41.6	23.9
Progression Factor	1.00	1.00	1.00	1.00	1.00	1.00	1.00	1.00	1.00	1.00	1.00	1.00
Incremental Delay, d2	33.0	0.5	0.2	2.5	29.3	3.7	2.6	5.5	0.1	18.6	0.2	0.0
Delay (s)	89.2	29.8	0.2	59.3	73.3	3.7	57.5	55.9	32.2	71.9	41.8	23.9
Level of Service	F	C	A	E	E	A	E	E	C	E	D	C
Approach Delay (s)		36.2			46.5			52.3			54.0	
Approach LOS		D			D			D			D	

Intersection Summary			
HCM Average Control Delay	46.9	HCM Level of Service	D
HCM Volume to Capacity ratio	0.92		
Actuated Cycle Length (s)	135.0	Sum of lost time (s)	9.0
Intersection Capacity Utilization	82.3%	ICU Level of Service	E
Analysis Period (min)	15		

c Critical Lane Group

HCM Signalized Intersection Capacity Analysis
19: Farmwell Road & Smith Switch Road

Kincora
Existing Conditions (2008)

Movement	EBL	EBT	EBR	WBL	WBT	WBR	NBL	NBT	NBR	SBL	SBT	SBR
Lane Configurations												
Ideal Flow (vphpl)	1900	1900	1900	1900	1900	1900	1900	1900	1900	1900	1900	1900
Total Lost time (s)	3.0	3.0	3.0	3.0	3.0	3.0	3.0	3.0	3.0	3.0	3.0	
Lane Util. Factor	1.00	0.91	1.00	1.00	0.91	1.00	1.00	0.95	1.00	1.00	0.95	
Frt	1.00	1.00	0.85	1.00	1.00	0.85	1.00	1.00	0.85	1.00	0.93	
Flt Protected	0.95	1.00	1.00	0.95	1.00	1.00	0.95	1.00	1.00	0.95	1.00	
Satd. Flow (prot)	1770	5085	1583	1770	5085	1583	1770	3539	1583	1770	3283	
Flt Permitted	0.95	1.00	1.00	0.95	1.00	1.00	0.65	1.00	1.00	0.55	1.00	
Satd. Flow (perm)	1770	5085	1583	1770	5085	1583	1207	3539	1583	1017	3283	
Volume (vph)	14	1123	24	352	2180	142	115	32	397	162	55	50
Peak-hour factor, PHF	0.35	0.92	0.55	0.86	0.92	0.72	0.82	0.57	0.86	0.79	0.65	0.63
Adj. Flow (vph)	40	1221	44	409	2370	197	140	56	462	205	85	79
RTOR Reduction (vph)	0	0	21	0	0	44	0	0	0	0	71	0
Lane Group Flow (vph)	40	1221	23	409	2370	153	140	56	462	205	93	0
Turn Type	Prot		pm+ov	Prot		pm+ov	pm+pt		Free	pm+pt		
Protected Phases	1	6	3	5	2	7	3	8		7	4	
Permitted Phases			6			2	8		Free	4		
Actuated Green, G (s)	5.9	54.6	67.1	35.3	84.0	101.1	18.5	6.0	140.0	27.7	10.6	
Effective Green, g (s)	9.9	58.1	74.6	39.3	87.5	108.6	26.0	9.5	140.0	33.6	14.1	
Actuated g/C Ratio	0.07	0.42	0.53	0.28	0.62	0.78	0.19	0.07	1.00	0.24	0.10	
Clearance Time (s)	7.0	6.5	7.0	7.0	6.5	7.0	7.0	6.5		7.0	6.5	
Vehicle Extension (s)	2.0	3.0	2.0	2.0	3.0	2.0	2.0	2.0		2.0	2.0	
Lane Grp Cap (vph)	125	2110	877	497	3178	1262	291	240	1583	358	331	
v/s Ratio Prot	0.02	0.24	0.00	c0.23	c0.47	0.02	0.06	0.02		c0.09	0.03	
v/s Ratio Perm			0.01			0.08	0.03		0.29	c0.05		
v/c Ratio	0.32	0.58	0.03	0.82	0.75	0.12	0.48	0.23	0.29	0.57	0.28	
Uniform Delay, d1	61.8	31.5	15.5	47.1	18.4	3.9	50.4	61.8	0.0	45.8	58.3	
Progression Factor	1.00	1.00	1.00	1.00	1.00	1.00	1.00	1.00	1.00	1.00	1.00	
Incremental Delay, d2	0.5	1.2	0.0	10.1	1.6	0.0	0.5	0.2	0.5	1.4	0.2	
Delay (s)	62.4	32.7	15.5	57.2	20.1	3.9	50.9	62.0	0.5	47.1	58.4	
Level of Service	E	C	B	E	C	A	D	E	A	D	E	
Approach Delay (s)		33.0			24.1			16.4			52.2	
Approach LOS		C			C			B			D	

Intersection Summary			
HCM Average Control Delay	27.3	HCM Level of Service	C
HCM Volume to Capacity ratio	0.72		
Actuated Cycle Length (s)	140.0	Sum of lost time (s)	6.0
Intersection Capacity Utilization	73.6%	ICU Level of Service	D
Analysis Period (min)	15		

c Critical Lane Group

HCM Signalized Intersection Capacity Analysis
20: Waxpool Road & Loudoun County Pkwy.

Kincora
Existing Conditions (2008)

Movement	EBL	EBT	EBR	WBL	WBT	WBR	NBL	NBT	NBR	SBL	SBT	SBR
Lane Configurations												
Ideal Flow (vphpl)	1900	1900	1900	1900	1900	1900	1900	1900	1900	1900	1900	1900
Total Lost time (s)	3.0	3.0	3.0	3.0	3.0	3.0	3.0	3.0	3.0	3.0	3.0	3.0
Lane Util. Factor	0.97	0.91	1.00	0.97	0.91	1.00	1.00	0.95	1.00	0.97	0.95	1.00
Frt	1.00	1.00	0.85	1.00	1.00	0.85	1.00	1.00	0.85	1.00	1.00	0.85
Flt Protected	0.95	1.00	1.00	0.95	1.00	1.00	0.95	1.00	1.00	0.95	1.00	1.00
Satd. Flow (prot)	3433	5085	1583	3433	5085	1583	1770	3539	1583	3433	3539	1583
Flt Permitted	0.95	1.00	1.00	0.95	1.00	1.00	0.95	1.00	1.00	0.95	1.00	1.00
Satd. Flow (perm)	3433	5085	1583	3433	5085	1583	1770	3539	1583	3433	3539	1583
Volume (vph)	106	1277	123	1155	2789	641	126	180	657	293	207	267
Peak-hour factor, PHF	0.80	0.92	0.90	0.92	0.98	0.89	0.62	0.87	0.93	0.89	0.96	0.95
Adj. Flow (vph)	132	1388	137	1255	2846	720	203	207	706	329	216	281
RTOR Reduction (vph)	0	0	12	0	0	0	0	0	0	0	0	0
Lane Group Flow (vph)	132	1388	125	1255	2846	720	203	207	706	329	216	281
Turn Type	Prot		pm+ov	Prot		Free	Split		Free	Split		Free
Protected Phases	5	2	4	1	6		4	4		3	3	
Permitted Phases			2			Free			Free			Free
Actuated Green, G (s)	7.0	38.5	49.2	42.0	73.5	130.0	10.7	10.7	130.0	9.8	9.8	130.0
Effective Green, g (s)	11.0	43.0	58.2	46.0	78.0	130.0	15.2	15.2	130.0	13.8	13.8	130.0
Actuated g/C Ratio	0.08	0.33	0.45	0.35	0.60	1.00	0.12	0.12	1.00	0.11	0.11	1.00
Clearance Time (s)	7.0	7.5	7.5	7.0	7.5		7.5	7.5		7.0	7.0	
Vehicle Extension (s)	3.0	4.0	3.0	3.0	4.0		3.0	3.0		3.0	3.0	
Lane Grp Cap (vph)	290	1682	709	1215	3051	1583	207	414	1583	364	376	1583
v/s Ratio Prot	0.04	0.27	0.02	c0.37	c0.56		c0.11	0.06		c0.10	0.06	
v/s Ratio Perm			0.06			0.45			0.45			0.18
v/c Ratio	0.46	0.83	0.18	1.03	0.93	0.45	0.98	0.50	0.45	0.90	0.57	0.18
Uniform Delay, d1	56.6	40.0	21.5	42.0	23.6	0.0	57.3	53.8	0.0	57.4	55.3	0.0
Progression Factor	1.00	1.00	1.00	1.00	1.00	1.00	1.00	1.00	1.00	1.00	1.00	1.00
Incremental Delay, d2	1.1	4.8	0.1	34.7	6.7	0.9	56.8	1.0	0.9	24.8	2.1	0.2
Delay (s)	57.8	44.8	21.6	76.7	30.3	0.9	114.0	54.8	0.9	82.3	57.4	0.2
Level of Service	E	D	C	E	C	A	F	D	A	F	E	A
Approach Delay (s)		43.9			38.0			31.5			47.9	
Approach LOS		D			D			C			D	

Intersection Summary			
HCM Average Control Delay	39.3	HCM Level of Service	D
HCM Volume to Capacity ratio	0.97		
Actuated Cycle Length (s)	130.0	Sum of lost time (s)	9.0
Intersection Capacity Utilization	87.2%	ICU Level of Service	E
Analysis Period (min)	15		

c Critical Lane Group

HCM Signalized Intersection Capacity Analysis
21: Waxpool Road & Pacific Blvd.

Kincora
Existing Conditions (2008)

Movement	EBL	EBT	EBR	WBL	WBT	WBR	NBL	NBT	NBR	SBL	SBT	SBR
Lane Configurations												
Ideal Flow (vphpl)	1900	1900	1900	1900	1900	1900	1900	1900	1900	1900	1900	1900
Total Lost time (s)	3.0	3.0	3.0	3.0	3.0	3.0	3.0	3.0	3.0	3.0	3.0	3.0
Lane Util. Factor	0.97	0.86	1.00	0.97	0.86	1.00	0.91	0.86	0.91	0.91	0.91	1.00
Frt	1.00	1.00	0.85	1.00	1.00	0.85	1.00	1.00	0.85	1.00	1.00	0.85
Flt Protected	0.95	1.00	1.00	0.95	1.00	1.00	0.95	0.96	1.00	0.95	0.96	1.00
Satd. Flow (prot)	3433	6408	1583	3433	6408	1583	1610	3078	1441	1610	3247	1583
Flt Permitted	0.95	1.00	1.00	0.95	1.00	1.00	0.95	0.96	1.00	0.95	0.96	1.00
Satd. Flow (perm)	3433	6408	1583	3433	6408	1583	1610	3078	1441	1610	3247	1583
Volume (vph)	156	2047	10	51	3659	324	299	40	673	304	22	272
Peak-hour factor, PHF	0.71	0.92	0.83	0.71	0.91	0.90	0.70	0.83	0.85	0.83	0.92	0.96
Adj. Flow (vph)	220	2225	12	72	4021	360	427	48	792	366	24	283
RTOR Reduction (vph)	0	0	5	0	0	0	0	0	0	0	0	0
Lane Group Flow (vph)	220	2225	7	72	4021	360	214	261	792	183	207	283
Turn Type	Prot		Perm	Prot		Free	Split		Free	Split		Free
Protected Phases	1	6		5	2		4	4		3	3	
Permitted Phases			6			Free			Free			Free
Actuated Green, G (s)	5.0	84.0	84.0	5.0	84.0	145.0	15.0	15.0	145.0	13.0	13.0	145.0
Effective Green, g (s)	9.0	88.0	88.0	9.0	88.0	145.0	19.0	19.0	145.0	17.0	17.0	145.0
Actuated g/C Ratio	0.06	0.61	0.61	0.06	0.61	1.00	0.13	0.13	1.00	0.12	0.12	1.00
Clearance Time (s)	7.0	7.0	7.0	7.0	7.0		7.0	7.0		7.0	7.0	
Vehicle Extension (s)	2.0	3.0	3.0	2.0	3.0		3.0	3.0		3.0	3.0	
Lane Grp Cap (vph)	213	3889	961	213	3889	1583	211	403	1441	189	381	1583
v/s Ratio Prot	c0.06	0.35		0.02	c0.63		c0.13	0.08		c0.11	0.06	
v/s Ratio Perm			0.00			0.23			0.55			0.18
v/c Ratio	1.03	0.57	0.01	0.34	1.03	0.23	1.01	1.01dl	0.55	0.97	0.93dl	0.18
Uniform Delay, d1	68.0	17.2	11.3	65.1	28.5	0.0	63.0	59.8	0.0	63.7	60.3	0.0
Progression Factor	1.00	1.00	1.00	1.00	1.00	1.00	1.00	1.00	1.00	1.00	1.00	1.00
Incremental Delay, d2	70.5	0.6	0.0	0.3	24.2	0.3	65.7	3.6	1.5	55.6	1.6	0.2
Delay (s)	138.5	17.8	11.3	65.5	52.7	0.3	128.7	63.4	1.5	119.3	61.9	0.2
Level of Service	F	B	B	E	D	A	F	E	A	F	E	A
Approach Delay (s)		28.6			48.7			35.7			51.6	
Approach LOS		C			D			D			D	

Intersection Summary

HCM Average Control Delay	41.4	HCM Level of Service	D
HCM Volume to Capacity ratio	1.02		
Actuated Cycle Length (s)	145.0	Sum of lost time (s)	12.0
Intersection Capacity Utilization	90.6%	ICU Level of Service	E
Analysis Period (min)	15		

dl Defacto Left Lane. Recode with 1 though lane as a left lane.
c Critical Lane Group

HCM Signalized Intersection Capacity Analysis
22: Church Road & Davis Drive

Kincora
Existing Conditions (2008)

Movement	EBL	EBT	EBR	WBL	WBT	WBR	NBL	NBT	NBR	SBL	SBT	SBR
Lane Configurations												
Ideal Flow (vphpl)	1900	1900	1900	1900	1900	1900	1900	1900	1900	1900	1900	1900
Total Lost time (s)		3.0		3.0	3.0			3.0	3.0		3.0	
Lane Util. Factor		0.95		1.00	0.95			1.00	1.00		1.00	
Frt		0.99		1.00	1.00			1.00	0.85		0.93	
Flt Protected		1.00		0.95	1.00			0.95	1.00		0.98	
Satd. Flow (prot)		3489		1770	3539			1775	1583		1703	
Flt Permitted		0.89		0.07	1.00			0.95	1.00		0.98	
Satd. Flow (perm)		3117		123	3539			1775	1583		1703	
Volume (vph)	25	1333	125	165	965	0	180	2	262	7	3	17
Peak-hour factor, PHF	0.69	0.95	0.92	0.69	0.86	0.25	0.74	0.50	0.82	0.35	0.75	0.75
Adj. Flow (vph)	36	1403	136	239	1122	0	243	4	320	20	4	23
RTOR Reduction (vph)	0	5	0	0	0	0	0	0	0	0	21	0
Lane Group Flow (vph)	0	1570	0	239	1122	0	0	247	320	0	26	0
Turn Type	Perm			pm+pt			Split		pm+ov	Split		
Protected Phases		6		5	2		4	4	5	8	8	
Permitted Phases	6			2					4			
Actuated Green, G (s)		54.5		68.6	68.6			18.8	27.4		6.2	
Effective Green, g (s)		57.5		71.6	71.6			21.8	32.9		9.2	
Actuated g/C Ratio		0.52		0.64	0.64			0.20	0.29		0.08	
Clearance Time (s)		6.0		5.5	6.0			6.0	5.5		6.0	
Vehicle Extension (s)		4.0		2.0	4.0			3.0	2.0		3.0	
Lane Grp Cap (vph)		1606		243	2271			347	467		140	
v/s Ratio Prot				c0.10	0.32			c0.14	0.07		c0.02	
v/s Ratio Perm		0.50		c0.53					0.13			
v/c Ratio		0.98		0.98	0.49			0.71	0.69		0.18	
Uniform Delay, d1		26.4		35.4	10.5			42.0	34.8		47.7	
Progression Factor		1.00		1.00	1.00			1.00	1.00		1.00	
Incremental Delay, d2		17.3		52.8	0.2			6.7	3.3		0.6	
Delay (s)		43.7		88.1	10.7			48.7	38.1		48.3	
Level of Service		D		F	B			D	D		D	
Approach Delay (s)		43.7			24.3			42.7			48.3	
Approach LOS		D			C			D			D	

Intersection Summary

HCM Average Control Delay	36.2	HCM Level of Service	D
HCM Volume to Capacity ratio	0.85		
Actuated Cycle Length (s)	111.6	Sum of lost time (s)	9.0
Intersection Capacity Utilization	95.0%	ICU Level of Service	F
Analysis Period (min)	15		

c Critical Lane Group

Movement	EBL	EBT	WBT	WBR	SBL	SBR
Lane Configurations						
Ideal Flow (vphpl)	1900	1900	1900	1900	1900	1900
Total Lost time (s)	3.0	3.0	3.0	3.0	3.0	3.0
Lane Util. Factor	0.97	0.95	0.91	0.91	0.97	1.00
Frt	1.00	1.00	0.96	0.85	1.00	0.85
Flt Protected	0.95	1.00	1.00	1.00	0.95	1.00
Satd. Flow (prot)	3433	3539	3259	1441	3433	1583
Flt Permitted	0.95	1.00	1.00	1.00	0.95	1.00
Satd. Flow (perm)	3433	3539	3259	1441	3433	1583
Volume (vph)	943	473	489	729	605	697
Peak-hour factor, PHF	0.89	0.88	0.87	0.95	0.89	0.89
Adj. Flow (vph)	1060	538	562	767	680	783
RTOR Reduction (vph)	0	0	24	2	0	356
Lane Group Flow (vph)	1060	538	733	570	680	427
Turn Type	Prot			pm+ov		Perm
Protected Phases	5	2	6	4	4	
Permitted Phases				6		4
Actuated Green, G (s)	35.5	76.7	34.2	70.7	36.5	36.5
Effective Green, g (s)	39.5	80.7	38.2	79.2	41.0	41.0
Actuated g/C Ratio	0.31	0.63	0.30	0.62	0.32	0.32
Clearance Time (s)	7.0	7.0	7.0	7.5	7.5	7.5
Vehicle Extension (s)	2.0	3.0	3.0	3.0	3.0	3.0
Lane Grp Cap (vph)	1062	2236	975	920	1102	508
v/s Ratio Prot	c0.31	0.15	c0.22	0.20	0.20	
v/s Ratio Perm				0.20		c0.27
v/c Ratio	1.00	0.24	0.75	0.61	0.62	0.84
Uniform Delay, d1	44.1	10.2	40.5	14.9	36.7	40.3
Progression Factor	1.00	1.00	1.00	1.00	1.00	1.00
Incremental Delay, d2	26.9	0.1	3.3	1.2	1.0	11.9
Delay (s)	71.0	10.3	43.8	16.1	37.7	52.3
Level of Service	E	B	D	B	D	D
Approach Delay (s)		50.5	31.9		45.5	
Approach LOS		D	C		D	

Intersection Summary

HCM Average Control Delay	43.2	HCM Level of Service	D
HCM Volume to Capacity ratio	0.86		
Actuated Cycle Length (s)	127.7	Sum of lost time (s)	9.0
Intersection Capacity Utilization	75.5%	ICU Level of Service	D
Analysis Period (min)	15		

c Critical Lane Group

HCM Signalized Intersection Capacity Analysis
3: Route 7 & Presidential Drive

Kincora
Existing Conditions (2008)

Movement	EBL	EBT	EBR	WBL	WBT	WBR	NBL	NBT	NBR	SBL	SBT	SBR
Lane Configurations												
Ideal Flow (vphpl)	1900	1900	1900	1900	1900	1900	1900	1900	1900	1900	1900	1900
Total Lost time (s)	3.0	3.0	3.0	3.0	3.0	3.0	3.0	3.0	3.0	3.0	3.0	3.0
Lane Util. Factor	1.00	0.86	1.00	0.97	0.86	1.00	1.00	1.00	1.00	0.97	1.00	1.00
Frt	1.00	1.00	0.85	1.00	1.00	0.85	1.00	1.00	0.85	1.00	1.00	0.85
Flt Protected	0.95	1.00	1.00	0.95	1.00	1.00	0.95	1.00	1.00	0.95	1.00	1.00
Satd. Flow (prot)	1770	6225	1583	3433	6225	1583	1770	1863	1583	3433	1863	1583
Flt Permitted	0.95	1.00	1.00	0.95	1.00	1.00	0.95	1.00	1.00	0.95	1.00	1.00
Satd. Flow (perm)	1770	6225	1583	3433	6225	1583	1770	1863	1583	3433	1863	1583
Volume (vph)	27	1894	66	77	2022	5	68	16	100	9	10	36
Peak-hour factor, PHF	0.70	0.93	0.80	0.85	0.93	0.44	0.82	0.89	0.92	0.58	0.54	0.86
Adj. Flow (vph)	39	2037	82	91	2174	11	83	18	109	16	19	42
RTOR Reduction (vph)	0	0	0	0	0	3	0	0	0	0	0	36
Lane Group Flow (vph)	39	2037	82	91	2174	8	83	18	109	16	19	6
Heavy Vehicles (%)	2%	5%	2%	2%	5%	2%	2%	2%	2%	2%	2%	2%
Turn Type	Prot		Free	Prot		pm+ov	Prot		Free	Prot		pm+ov
Protected Phases	1	6		5	2	7	3	8		7	4	1
Permitted Phases			Free			2			Free			4
Actuated Green, G (s)	6.6	82.8	135.0	10.1	86.3	90.9	9.7	8.0	135.0	4.6	2.9	9.5
Effective Green, g (s)	10.6	87.3	135.0	14.1	90.8	99.4	13.7	13.0	135.0	8.6	7.9	18.5
Actuated g/C Ratio	0.08	0.65	1.00	0.10	0.67	0.74	0.10	0.10	1.00	0.06	0.06	0.14
Clearance Time (s)	7.0	7.5		7.0	7.5	7.0	7.0	8.0		7.0	8.0	7.0
Vehicle Extension (s)	2.0	3.0		2.0	3.0	2.0	2.0	2.0		2.0	2.0	2.0
Lane Grp Cap (vph)	139	4026	1583	359	4187	1201	180	179	1583	219	109	252
v/s Ratio Prot	c0.02	0.33		c0.03	c0.35	0.00	c0.05	0.01		0.00	c0.01	0.00
v/s Ratio Perm			0.05			0.00			0.07			0.00
v/c Ratio	0.28	0.51	0.05	0.25	0.52	0.01	0.46	0.10	0.07	0.07	0.17	0.02
Uniform Delay, d1	58.6	12.5	0.0	55.6	11.1	4.7	57.2	55.7	0.0	59.5	60.4	50.4
Progression Factor	1.00	1.00	1.00	1.00	1.00	1.00	1.00	1.00	1.00	1.00	1.00	1.00
Incremental Delay, d2	0.4	0.5	0.1	0.1	0.5	0.0	0.7	0.1	0.1	0.1	0.3	0.0
Delay (s)	59.0	13.0	0.1	55.7	11.6	4.7	57.9	55.8	0.1	59.5	60.7	50.4
Level of Service	E	B	A	E	B	A	E	E	A	E	E	D
Approach Delay (s)		13.3			13.3			27.7			54.9	
Approach LOS		B			B			C			D	

Intersection Summary				
HCM Average Control Delay	14.6	HCM Level of Service	B	
HCM Volume to Capacity ratio	0.46			
Actuated Cycle Length (s)	135.0	Sum of lost time (s)	9.0	
Intersection Capacity Utilization	50.1%	ICU Level of Service	A	
Analysis Period (min)	15			

c Critical Lane Group

HCM Unsignalized Intersection Capacity Analysis
11: Smith Switch Road & Loudoun County Pkwy.

Kincora
Existing Conditions (2008)

Movement	EBL	EBR	NBL	NBT	SBT	SBR
Lane Configurations						
Sign Control	Stop			Free	Free	
Grade	0%			0%	0%	
Volume (veh/h)	7	5	11	146	2	116
Peak Hour Factor	0.42	0.50	0.39	0.86	0.84	0.25
Hourly flow rate (vph)	17	10	28	170	2	464
Pedestrians						
Lane Width (ft)						
Walking Speed (ft/s)						
Percent Blockage						
Right turn flare (veh)						
Median type	None					
Median storage veh)						
Upstream signal (ft)						
pX, platoon unblocked						
vC, conflicting volume	461	234	466			
vC1, stage 1 conf vol						
vC2, stage 2 conf vol						
vCu, unblocked vol	461	234	466			
tC, single (s)	6.4	6.2	4.1			
tC, 2 stage (s)						
tF (s)	3.5	3.3	2.2			
p0 queue free %	97	99	97			
cM capacity (veh/h)	545	805	1095			

Direction, Lane #	EB 1	NB 1	SB 1
Volume Total	27	198	466
Volume Left	17	28	0
Volume Right	10	0	464
cSH	620	1095	1700
Volume to Capacity	0.04	0.03	0.27
Queue Length 95th (ft)	3	2	0
Control Delay (s)	11.1	1.4	0.0
Lane LOS	B	A	
Approach Delay (s)	11.1	1.4	0.0
Approach LOS	B		

Intersection Summary			
Average Delay	0.8		
Intersection Capacity Utilization	25.0%	ICU Level of Service	A
Analysis Period (min)	15		

Movement	WBL	WBR	NBT	NBR	SBL	SBT
Lane Configurations						
Ideal Flow (vphpl)	1900	1900	1900	1900	1900	1900
Total Lost time (s)	3.0	3.0	3.0	3.0	3.0	3.0
Lane Util. Factor	0.97	1.00	0.91	1.00	1.00	0.91
Frt	1.00	0.85	1.00	0.85	1.00	1.00
Flt Protected	0.95	1.00	1.00	1.00	0.95	1.00
Satd. Flow (prot)	3433	1583	5085	1583	1770	5085
Flt Permitted	0.95	1.00	1.00	1.00	0.95	1.00
Satd. Flow (perm)	3433	1583	5085	1583	1770	5085
Volume (vph)	398	118	982	541	108	494
Peak-hour factor, PHF	0.67	0.70	0.92	0.87	0.72	0.92
Adj. Flow (vph)	594	169	1067	622	150	537
RTOR Reduction (vph)	0	0	0	0	0	0
Lane Group Flow (vph)	594	169	1067	622	150	537
Turn Type		Free		Free	Prot	
Protected Phases	4		2		1	6
Permitted Phases		Free		Free		
Actuated Green, G (s)	71.2	200.0	84.6	200.0	22.2	113.8
Effective Green, g (s)	75.7	200.0	89.1	200.0	26.2	118.3
Actuated g/C Ratio	0.38	1.00	0.45	1.00	0.13	0.59
Clearance Time (s)	7.5		7.5		7.0	7.5
Vehicle Extension (s)	3.0		6.0		3.0	6.0
Lane Grp Cap (vph)	1299	1583	2265	1583	232	3008
v/s Ratio Prot	c0.17		c0.21		c0.08	0.11
v/s Ratio Perm		0.11		0.39		
v/c Ratio	0.46	0.11	0.47	0.39	0.65	0.18
Uniform Delay, d1	46.7	0.0	38.9	0.0	82.5	18.7
Progression Factor	1.00	1.00	1.00	1.00	1.00	1.00
Incremental Delay, d2	0.3	0.1	0.7	0.7	6.1	0.1
Delay (s)	47.0	0.1	39.6	0.7	88.6	18.8
Level of Service	D	A	D	A	F	B
Approach Delay (s)	36.6		25.3			34.0
Approach LOS	D		C			C

Intersection Summary			
HCM Average Control Delay	30.0	HCM Level of Service	C
HCM Volume to Capacity ratio	0.49		
Actuated Cycle Length (s)	200.0	Sum of lost time (s)	9.0
Intersection Capacity Utilization	46.3%	ICU Level of Service	A
Analysis Period (min)	15		
c Critical Lane Group			

Movement	EBL	EBT	EBR	WBL	WBT	WBR	NBL	NBT	NBR	SBL	SBT	SBR
Lane Configurations												
Ideal Flow (vphpl)	1900	1900	1900	1900	1900	1900	1900	1900	1900	1900	1900	1900
Total Lost time (s)	3.0	3.0	3.0	3.0	3.0	3.0	3.0	3.0	3.0	3.0	3.0	3.0
Lane Util. Factor	0.97	0.91	1.00	0.97	0.91	1.00	1.00	0.95	1.00	0.97	0.95	1.00
Frt	1.00	1.00	0.85	1.00	1.00	0.85	1.00	1.00	0.85	1.00	1.00	0.85
Flt Protected	0.95	1.00	1.00	0.95	1.00	1.00	0.95	1.00	1.00	0.95	1.00	1.00
Satd. Flow (prot)	3433	5085	1583	3433	5085	1583	1770	3539	1583	3433	3539	1583
Flt Permitted	0.95	1.00	1.00	0.95	1.00	1.00	0.95	1.00	1.00	0.95	1.00	1.00
Satd. Flow (perm)	3433	5085	1583	3433	5085	1583	1770	3539	1583	3433	3539	1583
Volume (vph)	47	811	21	311	719	221	21	57	281	181	53	39
Peak-hour factor, PHF	0.87	0.98	0.69	0.81	0.90	1.00	0.67	0.88	0.89	0.76	0.85	0.68
Adj. Flow (vph)	54	828	30	384	799	221	31	65	316	238	62	57
RTOR Reduction (vph)	0	0	12	0	0	0	0	0	0	0	0	0
Lane Group Flow (vph)	54	828	18	384	799	221	31	65	316	238	62	57
Turn Type	Prot		pm+ov	Prot		Free	Split		Free	Split		Free
Protected Phases	5	2	4	1	6		4	4		3	3	
Permitted Phases			2			Free			Free			Free
Actuated Green, G (s)	6.0	63.7	70.5	18.6	76.3	130.0	6.8	6.8	130.0	11.9	11.9	130.0
Effective Green, g (s)	10.0	68.2	79.5	22.6	80.8	130.0	11.3	11.3	130.0	15.9	15.9	130.0
Actuated g/C Ratio	0.08	0.52	0.61	0.17	0.62	1.00	0.09	0.09	1.00	0.12	0.12	1.00
Clearance Time (s)	7.0	7.5	7.5	7.0	7.5		7.5	7.5		7.0	7.0	
Vehicle Extension (s)	3.0	4.0	3.0	3.0	4.0		3.0	3.0		3.0	3.0	
Lane Grp Cap (vph)	264	2668	968	597	3161	1583	154	308	1583	420	433	1583
v/s Ratio Prot	0.02	c0.16	0.00	c0.11	0.16		0.02	0.02		c0.07	0.02	
v/s Ratio Perm			0.01			0.14			c0.20			0.04
v/c Ratio	0.20	0.31	0.02	0.64	0.25	0.14	0.20	0.21	0.20	0.57	0.14	0.04
Uniform Delay, d1	56.3	17.5	9.9	49.9	11.0	0.0	55.2	55.2	0.0	53.8	51.0	0.0
Progression Factor	1.00	1.00	1.00	1.00	1.00	1.00	1.00	1.00	1.00	1.00	1.00	1.00
Incremental Delay, d2	0.4	0.3	0.0	2.4	0.2	0.2	0.6	0.3	0.3	1.8	0.2	0.0
Delay (s)	56.7	17.8	9.9	52.3	11.2	0.2	55.8	55.5	0.3	55.6	51.1	0.0
Level of Service	E	B	A	D	B	A	E	E	A	E	D	A
Approach Delay (s)		19.9			20.7			13.2			45.9	
Approach LOS		B			C			B			D	

Intersection Summary			
HCM Average Control Delay	22.4	HCM Level of Service	C
HCM Volume to Capacity ratio	0.39		
Actuated Cycle Length (s)	130.0	Sum of lost time (s)	9.0
Intersection Capacity Utilization	46.4%	ICU Level of Service	A
Analysis Period (min)	15		
c Critical Lane Group			

Movement	EBL	EBT	EBR	WBL	WBT	WBR	NBL	NBT	NBR	SBL	SBT	SBR
Lane Configurations												
Ideal Flow (vphpl)	1900	1900	1900	1900	1900	1900	1900	1900	1900	1900	1900	1900
Total Lost time (s)	3.0	3.0	3.0	3.0	3.0	3.0	3.0	3.0	3.0	3.0	3.0	3.0
Lane Util. Factor	0.97	0.86	1.00	0.97	0.86	1.00	0.91	0.86	0.91	0.91	0.91	1.00
Frt	1.00	1.00	0.85	1.00	1.00	0.85	1.00	1.00	0.85	1.00	1.00	0.85
Flt Protected	0.95	1.00	1.00	0.95	1.00	1.00	0.95	1.00	1.00	0.95	0.96	1.00
Satd. Flow (prot)	3433	6408	1583	3433	6408	1583	1610	3204	1441	1610	3250	1583
Flt Permitted	0.95	1.00	1.00	0.95	1.00	1.00	0.95	1.00	1.00	0.95	0.96	1.00
Satd. Flow (perm)	3433	6408	1583	3433	6408	1583	1610	3204	1441	1610	3250	1583
Volume (vph)	450	1438	4	15	1082	846	9	49	34	673	41	601
Peak-hour factor, PHF	0.87	0.90	0.33	0.63	0.92	0.97	0.56	0.82	0.77	0.89	0.68	0.85
Adj. Flow (vph)	517	1598	12	24	1176	872	16	60	44	756	60	707
RTOR Reduction (vph)	0	0	5	0	0	0	0	0	0	0	0	0
Lane Group Flow (vph)	517	1598	7	24	1176	872	16	60	44	378	438	707
Turn Type	Prot		Perm	Prot		Free	Split		Free	Split		Free
Protected Phases	1	6		5	2		4	4		3	3	
Permitted Phases			6			Free			Free			Free
Actuated Green, G (s)	14.5	79.7	79.7	3.7	68.9	145.0	6.9	6.9	145.0	26.7	26.7	145.0
Effective Green, g (s)	18.5	83.7	83.7	7.7	72.9	145.0	10.9	10.9	145.0	30.7	30.7	145.0
Actuated g/C Ratio	0.13	0.58	0.58	0.05	0.50	1.00	0.08	0.08	1.00	0.21	0.21	1.00
Clearance Time (s)	7.0	7.0	7.0	7.0	7.0		7.0	7.0		7.0	7.0	
Vehicle Extension (s)	2.0	3.0	3.0	2.0	3.0		3.0	3.0		3.0	3.0	
Lane Grp Cap (vph)	438	3699	914	182	3222	1583	121	241	1441	341	688	1583
v/s Ratio Prot	c0.15	0.25		0.01	0.18		0.01	0.02		c0.23	0.13	
v/s Ratio Perm			0.00			c0.55			0.03			0.45
v/c Ratio	1.18	0.43	0.01	0.13	0.36	0.55	0.13	0.25	0.03	1.11	1.06dl	0.45
Uniform Delay, d1	63.2	17.3	13.0	65.5	22.0	0.0	62.6	63.2	0.0	57.1	52.1	0.0
Progression Factor	1.00	1.00	1.00	1.00	1.00	1.00	1.00	1.00	1.00	1.00	1.00	1.00
Incremental Delay, d2	102.5	0.4	0.0	0.1	0.3	1.4	0.5	0.5	0.0	81.2	1.9	0.9
Delay (s)	165.7	17.6	13.0	65.6	22.3	1.4	63.1	63.7	0.0	138.4	54.0	0.9
Level of Service	F	B	B	E	C	A	E	E	A	F	D	A
Approach Delay (s)		53.6			14.0			40.3			50.3	
Approach LOS		D			B			D			D	

Intersection Summary

HCM Average Control Delay	33.4	HCM Level of Service	D
HCM Volume to Capacity ratio	0.76		
Actuated Cycle Length (s)	145.0	Sum of lost time (s)	6.0
Intersection Capacity Utilization	64.8%	ICU Level of Service	C
Analysis Period (min)	15		

dl Defacto Left Lane. Recode with 1 though lane as a left lane.
c Critical Lane Group

APPENDIX D-2

INTERSECTION CAPACITY ANALYSIS RESULTS – INTERIM BUILD-OUT YEAR (2011) CONDITIONS WITHOUT DEVELOPMENT

HCM Signalized Intersection Capacity Analysis
1: Route 7 & Janelia Farm Blvd.

Kincora
Future Background 2011

Movement	EBL	EBT	EBR	WBL	WBT	WBR	NBL	NBT	NBR	SBL	SBT	SBR
Lane Configurations												
Ideal Flow (vphpl)	1900	1900	1900	1900	1900	1900	1900	1900	1900	1900	1900	1900
Total Lost time (s)	3.0	3.0	3.0	3.0	3.0	3.0	3.0	3.0	3.0	3.0	3.0	
Lane Util. Factor	0.97	0.86	1.00	0.97	0.86	1.00	0.97	1.00	1.00	0.97	0.95	
Frt	1.00	1.00	0.85	1.00	1.00	0.85	1.00	1.00	0.85	1.00	0.96	
Flt Protected	0.95	1.00	1.00	0.95	1.00	1.00	0.95	1.00	1.00	0.95	1.00	
Satd. Flow (prot)	3433	6225	1583	3433	6225	1583	3433	1863	1583	3433	3399	
Flt Permitted	0.95	1.00	1.00	0.95	1.00	1.00	0.95	1.00	1.00	0.95	1.00	
Satd. Flow (perm)	3433	6225	1583	3433	6225	1583	3433	1863	1583	3433	3399	
Volume (vph)	88	2915	313	336	1638	387	165	83	333	840	235	85
Peak-hour factor, PHF	0.95	0.95	0.95	0.95	0.95	0.95	0.95	0.95	0.95	0.95	0.95	0.95
Adj. Flow (vph)	93	3068	329	354	1724	407	174	87	351	884	247	89
RTOR Reduction (vph)	0	0	0	0	0	99	0	0	1	0	26	0
Lane Group Flow (vph)	93	3068	329	354	1724	308	174	87	350	884	310	0
Heavy Vehicles (%)	2%	5%	2%	2%	5%	2%	2%	2%	2%	2%	2%	2%
Turn Type	Prot		Free	Prot		pm+ov	Prot		pm+ov	Prot		
Protected Phases	1	6		5	2	3	7	4	5	3	8	
Permitted Phases			Free			2			4			
Actuated Green, G (s)	8.2	68.0	140.0	9.0	68.8	96.8	7.0	7.0	16.0	28.0	28.0	
Effective Green, g (s)	12.2	72.0	140.0	13.0	72.8	104.8	11.0	11.0	24.0	32.0	32.0	
Actuated g/C Ratio	0.09	0.51	1.00	0.09	0.52	0.75	0.08	0.08	0.17	0.23	0.23	
Clearance Time (s)	7.0	7.0		7.0	7.0	7.0	7.0	7.0	7.0	7.0	7.0	
Vehicle Extension (s)	2.0	3.0		2.0	3.0	3.0	2.0	2.0	2.0	3.0	3.0	
Lane Grp Cap (vph)	299	3201	1583	319	3237	1219	270	146	305	785	777	
v/s Ratio Prot	0.03	c0.49		0.10	0.28	0.06	0.05	0.05	c0.11	c0.26	0.09	
v/s Ratio Perm			c0.21			0.14			0.11			
v/c Ratio	0.31	0.96	0.21	1.11	0.53	0.25	0.64	0.60	1.15	1.13	0.40	
Uniform Delay, d1	60.0	32.6	0.0	63.5	22.3	5.5	62.6	62.4	58.0	54.0	45.8	
Progression Factor	1.00	1.00	1.00	1.00	1.00	1.00	1.00	1.00	1.00	1.00	1.00	
Incremental Delay, d2	0.2	8.8	0.3	83.2	0.6	0.1	3.9	4.3	97.8	72.7	0.3	
Delay (s)	60.2	41.4	0.3	146.7	22.9	5.6	66.5	66.6	155.8	126.7	46.2	
Level of Service	E	D	A	F	C	A	E	E	F	F	D	
Approach Delay (s)		38.0			37.7			117.8			104.5	
Approach LOS		D			D			F			F	

Intersection Summary			
HCM Average Control Delay	54.6	HCM Level of Service	D
HCM Volume to Capacity ratio	1.04		
Actuated Cycle Length (s)	140.0	Sum of lost time (s)	9.0
Intersection Capacity Utilization	96.8%	ICU Level of Service	F
Analysis Period (min)	15		

c Critical Lane Group

HCM Signalized Intersection Capacity Analysis
2: Route 7 & Smith Circle

Kincora
Future Background 2011

Movement	EBL	EBT	EBR	WBL	WBT	WBR	NBL	NBT	NBR	SBL	SBT	SBR
Lane Configurations												
Ideal Flow (vphpl)	1900	1900	1900	1900	1900	1900	1900	1900	1900	1900	1900	1900
Total Lost time (s)	3.0	3.0	3.0	3.0	3.0	3.0		3.0	3.0		3.0	
Lane Util. Factor	1.00	0.86	1.00	0.97	0.86	1.00		0.95	1.00		1.00	
Frt	1.00	1.00	0.85	1.00	1.00	0.85		1.00	0.85		0.97	
Flt Protected	0.95	1.00	1.00	0.95	1.00	1.00		1.00	1.00		0.97	
Satd. Flow (prot)	1770	6225	1583	3433	6225	1583		1770	1583		1767	
Flt Permitted	0.95	1.00	1.00	0.95	1.00	1.00		1.00	1.00		0.97	
Satd. Flow (perm)	1770	6225	1583	3433	6225	1583		1770	1583		1767	
Volume (vph)	40	4035	12	140	2355	2	0	161	932	13	7	5
Peak-hour factor, PHF	0.95	0.95	0.95	0.95	0.95	0.95	0.95	0.95	0.95	0.95	0.95	0.95
Adj. Flow (vph)	42	4247	13	147	2479	2	0	169	981	14	7	5
RTOR Reduction (vph)	0	0	2	0	0	0	0	0	0	0	5	0
Lane Group Flow (vph)	42	4247	11	147	2479	2	0	169	981	0	21	0
Heavy Vehicles (%)	2%	5%	2%	2%	5%	2%	2%	2%	2%	2%	2%	2%
Turn Type	Prot		pm+ov	Prot		pm+ov	Split		Free	Split		
Protected Phases	1	6	4	5	2	3	4	4		3	3	
Permitted Phases			6			2			Free			
Actuated Green, G (s)	8.0	144.1	161.3	2.0	138.1	146.3		17.2	200.0		8.2	
Effective Green, g (s)	12.0	148.6	169.8	6.0	142.6	154.8		21.2	200.0		12.2	
Actuated g/C Ratio	0.06	0.74	0.85	0.03	0.71	0.77		0.11	1.00		0.08	
Clearance Time (s)	7.0	7.5	7.0	7.0	7.5	7.0		7.0			7.0	
Vehicle Extension (s)	3.0	3.0	3.0	3.0	3.0	3.0		3.0			3.0	
Lane Grp Cap (vph)	106	4625	1344	103	4438	1249		188	1583		108	
v/s Ratio Prot	0.02	c0.68	0.00	c0.04	0.40	0.00		c0.10			0.01	
v/s Ratio Perm			0.01			0.00			c0.62			
v/c Ratio	0.40	0.92	0.01	1.43	0.56	0.00		0.90	0.62		0.20	
Uniform Delay, d1	90.5	20.8	2.3	97.0	13.7	5.1		88.3	0.0		89.2	
Progression Factor	1.00	1.00	1.00	0.80	1.73	2.16		1.00	1.00		1.00	
Incremental Delay, d2	2.4	3.9	0.0	226.3	0.4	0.0		38.2	1.8		0.9	
Delay (s)	92.9	24.7	2.3	303.6	24.0	11.0		126.5	1.8		90.1	
Level of Service	F	C	A	F	C	B		F	A		F	
Approach Delay (s)		25.3			39.6			20.2			90.1	
Approach LOS		C			D			C			F	

Intersection Summary			
HCM Average Control Delay	29.4	HCM Level of Service	C
HCM Volume to Capacity ratio	0.90		
Actuated Cycle Length (s)	200.0	Sum of lost time (s)	6.0
Intersection Capacity Utilization	79.2%	ICU Level of Service	D
Analysis Period (min)	15		

c Critical Lane Group

HCM Signalized Intersection Capacity Analysis
3: Route 7 & Loudoun County Parkway

Kincora
Future Background 2011

Movement	EBL	EBT	EBR	WBL	WBT	WBR	NBL	NBT	NBR	SBL	SBT	SBR
Lane Configurations												
Ideal Flow (vphpl)	1900	1900	1900	1900	1900	1900	1900	1900	1900	1900	1900	1900
Total Lost time (s)	3.0	3.0	3.0	3.0	3.0	3.0	3.0	3.0	3.0	3.0	3.0	3.0
Lane Util. Factor	1.00	0.86	1.00	0.97	0.86	1.00	1.00	1.00	1.00	0.97	1.00	1.00
Frt	1.00	1.00	0.85	1.00	1.00	0.85	1.00	1.00	0.85	1.00	1.00	0.85
Flt Protected	0.95	1.00	1.00	0.95	1.00	1.00	0.95	1.00	1.00	0.95	1.00	1.00
Satd. Flow (prot)	1770	6225	1583	3433	6225	1583	1770	1863	1583	3433	1863	1583
Flt Permitted	0.95	1.00	1.00	0.95	1.00	1.00	0.95	1.00	1.00	0.95	1.00	1.00
Satd. Flow (perm)	1770	6225	1583	3433	6225	1583	1770	1863	1583	3433	1863	1583
Volume (vph)	233	4234	690	636	2260	91	225	146	565	30	63	120
Peak-hour factor, PHF	0.95	0.95	0.95	0.95	0.95	0.95	0.95	0.95	0.95	0.95	0.95	0.95
Adj. Flow (vph)	245	4457	726	669	2379	96	237	154	595	32	66	126
RTOR Reduction (vph)	0	0	0	0	0	41	0	0	0	0	0	5
Lane Group Flow (vph)	245	4457	726	669	2379	55	237	154	595	32	66	121
Heavy Vehicles (%)	2%	5%	2%	2%	5%	2%	2%	2%	2%	2%	2%	2%
Turn Type	Prot		Free	Prot		Perm	Prot		Free	Prot		pm+ov
Protected Phases	1	6		5	2		3	8		7	4	1
Permitted Phases			Free			2			Free			4
Actuated Green, G (s)	30.4	128.5	200.0	12.2	110.3	110.3	15.0	19.8	200.0	10.0	14.8	45.2
Effective Green, g (s)	34.4	133.0	200.0	16.2	114.8	114.8	19.0	24.8	200.0	14.0	19.8	54.2
Actuated g/C Ratio	0.17	0.66	1.00	0.08	0.57	0.57	0.10	0.12	1.00	0.07	0.10	0.27
Clearance Time (s)	7.0	7.5		7.0	7.5	7.5	7.0	8.0		7.0	8.0	7.0
Vehicle Extension (s)	2.0	3.0		2.0	3.0	3.0	2.0	2.0		2.0	2.0	2.0
Lane Grp Cap (vph)	304	4140	1583	278	3573	909	168	231	1583	240	184	453
v/s Ratio Prot	0.14	c0.72		c0.19	0.38		c0.13	c0.08		0.01	0.04	0.05
v/s Ratio Perm			0.46			0.03			0.38			0.03
v/c Ratio	0.81	1.08	0.46	2.41	0.67	0.06	1.41	0.67	0.38	0.13	0.36	0.27
Uniform Delay, d1	79.6	33.5	0.0	91.9	29.4	18.8	90.5	83.7	0.0	87.3	84.2	57.3
Progression Factor	1.15	0.54	1.00	0.90	0.82	0.91	1.00	1.00	1.00	1.00	1.00	1.00
Incremental Delay, d2	7.8	37.5	0.5	642.5	0.9	0.1	216.3	5.5	0.7	0.1	0.4	0.1
Delay (s)	99.0	55.4	0.5	725.3	24.9	17.2	306.8	89.2	0.7	87.4	84.6	57.4
Level of Service	F	E	A	F	C	B	F	F	A	F	F	E
Approach Delay (s)		50.1			173.7			88.1			69.7	
Approach LOS		D			F			F			E	

Intersection Summary			
HCM Average Control Delay	94.1	HCM Level of Service	F
HCM Volume to Capacity ratio	1.17		
Actuated Cycle Length (s)	200.0	Sum of lost time (s)	9.0
Intersection Capacity Utilization	108.6%	ICU Level of Service	G
Analysis Period (min)	15		

c Critical Lane Group

HCM Signalized Intersection Capacity Analysis
4: Route 7 & George Washington Blvd.

Kincora
Future Background 2011

Movement	EBL	EBT	EBR	WBL	WBT	WBR	NBL	NBT	NBR	SBL	SBT	SBR
Lane Configurations												
Ideal Flow (vphpl)	1900	1900	1900	1900	1900	1900	1900	1900	1900	1900	1900	1900
Total Lost time (s)	3.0	3.0	3.0	3.0	3.0	3.0	3.0	3.0		3.0	3.0	
Lane Util. Factor	0.97	0.86	1.00	1.00	0.86	1.00	1.00	1.00		0.97	1.00	
Frt	1.00	1.00	0.85	1.00	1.00	0.85	1.00	0.88		1.00	0.89	
Flt Protected	0.95	1.00	1.00	0.95	1.00	1.00	0.95	1.00		0.95	1.00	
Satd. Flow (prot)	3433	6225	1583	1770	6225	1583	1770	1639		3433	1653	
Flt Permitted	0.95	1.00	1.00	0.95	1.00	1.00	0.95	1.00		0.95	1.00	
Satd. Flow (perm)	3433	6225	1583	1770	6225	1583	1770	1639		3433	1653	
Volume (vph)	42	4460	36	49	2563	249	4	1	4	442	3	9
Peak-hour factor, PHF	0.95	0.95	0.95	0.95	0.95	0.95	0.95	0.95	0.95	0.95	0.95	0.95
Adj. Flow (vph)	44	4695	38	52	2698	262	4	1	4	465	3	9
RTOR Reduction (vph)	0	0	9	0	0	39	0	4	0	0	8	0
Lane Group Flow (vph)	44	4695	29	52	2698	223	4	1	0	465	4	0
Heavy Vehicles (%)	2%	5%	2%	2%	5%	2%	2%	2%	2%	2%	2%	2%
Turn Type	Prot		pm+ov	Prot		pm+ov	Split			Split		
Protected Phases	1	6	3	5	2	4	3	3		4	4	
Permitted Phases			6			2						
Actuated Green, G (s)	8.0	142.3	144.3	9.7	144.0	161.0	2.0	2.0		17.0	17.0	
Effective Green, g (s)	12.0	147.3	153.3	13.7	149.0	170.0	6.0	6.0		21.0	21.0	
Actuated g/C Ratio	0.06	0.74	0.77	0.07	0.74	0.85	0.03	0.03		0.10	0.10	
Clearance Time (s)	7.0	8.0	7.0	7.0	8.0	7.0	7.0	7.0		7.0	7.0	
Vehicle Extension (s)	3.0	3.0	3.0	3.0	3.0	3.0	3.0	3.0		3.0	3.0	
Lane Grp Cap (vph)	206	4585	1237	121	4638	1346	53	49		360	174	
v/s Ratio Prot	0.01	c0.75	0.00	c0.03	0.43	0.02	c0.00	0.00		c0.14	0.00	
v/s Ratio Perm			0.02			0.12						
v/c Ratio	0.21	1.02	0.02	0.43	0.58	0.17	0.08	0.02		1.29	0.02	
Uniform Delay, d1	89.5	26.3	5.6	89.4	11.5	2.6	94.3	94.2		89.5	80.3	
Progression Factor	1.16	0.21	0.00	1.00	1.00	1.00	1.00	1.00		1.00	1.00	
Incremental Delay, d2	0.1	14.0	0.0	2.4	0.5	0.1	0.6	0.2		150.6	0.1	
Delay (s)	104.0	19.6	0.0	91.8	12.0	2.7	94.9	94.3		240.1	80.3	
Level of Service	F	B	A	F	B	A	F	F		F	F	
Approach Delay (s)		20.2			12.6			94.6			236.0	
Approach LOS		C			B			F			F	

Intersection Summary			
HCM Average Control Delay	29.9	HCM Level of Service	C
HCM Volume to Capacity ratio	0.98		
Actuated Cycle Length (s)	200.0	Sum of lost time (s)	12.0
Intersection Capacity Utilization	90.6%	ICU Level of Service	E
Analysis Period (min)	15		

c Critical Lane Group

HCM Signalized Intersection Capacity Analysis
5: Route 7 & Countryside Blvd.

Kincora
Future Background 2011

Movement	EBL	EBT	EBR	WBL	WBT	WBR	NBL	NBT	NBR	SBL	SBT	SBR
Lane Configurations												
Ideal Flow (vphpl)	1900	1900	1900	1900	1900	1900	1900	1900	1900	1900	1900	1900
Total Lost time (s)	3.0	3.0	3.0	3.0	3.0	3.0	3.0	3.0	3.0	3.0	3.0	3.0
Lane Util. Factor	0.97	0.86	1.00	0.97	0.86	1.00	0.97	0.95	1.00	0.97	0.95	1.00
Frt	1.00	1.00	0.85	1.00	1.00	0.85	1.00	1.00	0.85	1.00	1.00	0.85
Flt Protected	0.95	1.00	1.00	0.95	1.00	1.00	0.95	1.00	1.00	0.95	1.00	1.00
Satd. Flow (prot)	3433	6408	1583	3433	6408	1583	3433	3539	1583	3433	3539	1583
Flt Permitted	0.95	1.00	1.00	0.95	1.00	1.00	0.95	1.00	1.00	0.95	1.00	1.00
Satd. Flow (perm)	3433	6408	1583	3433	6408	1583	3433	3539	1583	3433	3539	1583
Volume (vph)	287	2942	99	101	1510	108	74	70	147	165	94	240
Peak-hour factor, PHF	0.95	0.95	0.95	0.95	0.95	0.95	0.95	0.95	0.95	0.95	0.95	0.95
Adj. Flow (vph)	302	3097	104	106	1589	114	78	74	155	174	99	253
RTOR Reduction (vph)	0	0	0	0	0	38	0	0	0	0	0	52
Lane Group Flow (vph)	302	3097	104	106	1589	76	78	74	155	174	99	201
Turn Type	Prot		Free	Prot		pm+ov	Prot		Free	Prot		pm+ov
Protected Phases	1	6		5	2	3	7	4		3	8	1
Permitted Phases			Free			2			Free			8
Actuated Green, G (s)	16.7	86.2	150.0	9.9	79.4	91.4	8.0	13.9	150.0	12.0	17.9	34.6
Effective Green, g (s)	20.7	90.2	150.0	13.9	83.4	99.4	12.0	17.9	150.0	16.0	21.9	42.6
Actuated g/C Ratio	0.14	0.60	1.00	0.09	0.56	0.66	0.08	0.12	1.00	0.11	0.15	0.28
Clearance Time (s)	7.0	7.0		7.0	7.0	7.0	7.0	7.0		7.0	7.0	7.0
Vehicle Extension (s)	2.0	2.0		3.0	2.0	2.0	2.0	2.0		2.0	2.0	2.0
Lane Grp Cap (vph)	474	3853	1583	318	3563	1081	275	422	1583	366	517	481
v/s Ratio Prot	c0.09	c0.48		0.03	0.25	0.01	0.02	0.02		c0.05	0.03	c0.06
v/s Ratio Perm			0.07			0.04			0.10			0.07
v/c Ratio	0.64	0.80	0.07	0.33	0.45	0.07	0.28	0.18	0.10	0.48	0.19	0.42
Uniform Delay, d1	61.1	23.1	0.0	63.7	19.7	8.9	65.0	59.4	0.0	63.1	56.3	43.6
Progression Factor	1.00	1.00	1.00	0.93	0.82	0.55	1.00	1.00	1.00	1.00	1.00	1.00
Incremental Delay, d2	2.1	1.9	0.1	0.6	0.4	0.0	0.2	0.1	0.1	0.4	0.1	0.2
Delay (s)	63.2	24.9	0.1	59.8	16.6	4.9	65.2	59.5	0.1	63.4	56.3	43.8
Level of Service	E	C	A	E	B	A	E	E	A	E	E	D
Approach Delay (s)		27.5			18.4			31.0			52.7	
Approach LOS		C			B			C			D	

Intersection Summary

HCM Average Control Delay	27.1	HCM Level of Service	C
HCM Volume to Capacity ratio	0.68		
Actuated Cycle Length (s)	150.0	Sum of lost time (s)	6.0
Intersection Capacity Utilization	69.0%	ICU Level of Service	C
Analysis Period (min)	15		

c Critical Lane Group

HCM Signalized Intersection Capacity Analysis
6: Route 7 & Palisade Parkway

Kincora
Future Background 2011

Movement	EBL	EBT	EBR	WBL	WBT	WBR	NBL	NBT	NBR	SBL	SBT	SBR
Lane Configurations												
Ideal Flow (vphpl)	1900	1900	1900	1900	1900	1900	1900	1900	1900	1900	1900	1900
Total Lost time (s)	3.0	3.0	3.0	3.0	3.0	3.0	3.0	3.0	3.0	3.0	3.0	3.0
Lane Util. Factor	0.97	0.86	1.00	1.00	0.86	1.00	0.97	1.00	1.00	0.97	1.00	1.00
Frt	1.00	1.00	0.85	1.00	1.00	0.85	1.00	1.00	0.85	1.00	1.00	0.85
Flt Protected	0.95	1.00	1.00	0.95	1.00	1.00	0.95	1.00	1.00	0.95	1.00	1.00
Satd. Flow (prot)	3433	6408	1583	1770	6408	1583	3433	1863	1583	3433	1863	1583
Flt Permitted	0.95	1.00	1.00	0.95	1.00	1.00	0.95	1.00	1.00	0.95	1.00	1.00
Satd. Flow (perm)	3433	6408	1583	1770	6408	1583	3433	1863	1583	3433	1863	1583
Volume (vph)	162	2671	381	123	1438	73	58	34	42	131	82	208
Peak-hour factor, PHF	0.95	0.95	0.95	0.95	0.95	0.95	0.95	0.95	0.95	0.95	0.95	0.95
Adj. Flow (vph)	171	2812	401	129	1514	77	61	36	44	138	86	219
RTOR Reduction (vph)	0	0	0	0	0	0	0	0	24	0	0	87
Lane Group Flow (vph)	171	2812	401	129	1514	77	61	36	20	138	86	132
Turn Type	Prot		Free	Prot		Free	Split		pm+ov	Split		pm+ov
Protected Phases	1	6		5	2		4	4	5	3	3	1
Permitted Phases			Free			Free			4			3
Actuated Green, G (s)	9.2	89.2	150.0	14.1	94.1	150.0	7.3	7.3	21.4	11.4	11.4	20.6
Effective Green, g (s)	13.2	93.2	150.0	18.1	98.1	150.0	11.3	11.3	29.4	15.4	15.4	28.6
Actuated g/C Ratio	0.09	0.62	1.00	0.12	0.65	1.00	0.08	0.08	0.20	0.10	0.10	0.19
Clearance Time (s)	7.0	7.0		7.0	7.0		7.0	7.0	7.0	7.0	7.0	7.0
Vehicle Extension (s)	2.0	4.0		2.0	4.0		3.0	3.0	2.0	3.0	3.0	2.0
Lane Grp Cap (vph)	302	3982	1583	214	4191	1583	259	140	342	352	191	302
v/s Ratio Prot	0.05	c0.44		c0.07	0.24		0.02	0.02	0.01	0.04	c0.05	0.04
v/s Ratio Perm			c0.25			0.05			0.01			0.05
v/c Ratio	0.57	0.71	0.25	0.60	0.36	0.05	0.24	0.26	0.06	0.39	0.45	0.44
Uniform Delay, d1	65.7	19.2	0.0	62.5	11.8	0.0	65.3	65.4	49.0	62.9	63.3	53.6
Progression Factor	1.24	0.26	1.00	1.00	1.00	1.00	1.00	1.00	1.00	1.00	1.00	1.00
Incremental Delay, d2	0.9	0.7	0.2	3.3	0.2	0.1	0.5	1.0	0.0	0.7	1.7	0.4
Delay (s)	82.2	5.7	0.2	65.8	12.0	0.1	65.8	66.4	49.1	63.6	65.0	54.0
Level of Service	F	A	A	E	B	A	E	E	D	E	E	D
Approach Delay (s)		8.9			15.5			60.7			59.1	
Approach LOS		A			B			E			E	

Intersection Summary

HCM Average Control Delay	16.1	HCM Level of Service	B
HCM Volume to Capacity ratio	0.62		
Actuated Cycle Length (s)	150.0	Sum of lost time (s)	9.0
Intersection Capacity Utilization	65.9%	ICU Level of Service	C
Analysis Period (min)	15		

c Critical Lane Group

Movement	WBL	WBR	NBT	NBR	SBL	SBT
Lane Configurations						
Ideal Flow (vphpl)	1900	1900	1900	1900	1900	1900
Total Lost time (s)	3.0	3.0	3.0		3.0	3.0
Lane Util. Factor	1.00	1.00	0.95		1.00	0.95
Frt	1.00	0.85	0.97		1.00	1.00
Flt Protected	0.95	1.00	1.00		0.95	1.00
Satd. Flow (prot)	1770	1583	3439		1770	3539
Flt Permitted	0.95	1.00	1.00		0.44	1.00
Satd. Flow (perm)	1770	1583	3439		829	3539
Volume (vph)	89	191	301	70	159	546
Peak-hour factor, PHF	0.95	0.95	0.95	0.95	0.95	0.95
Adj. Flow (vph)	94	201	317	74	167	575
RTOR Reduction (vph)	0	123	17	0	0	0
Lane Group Flow (vph)	94	78	374	0	167	575
Turn Type		pm+ov			pm+pt	
Protected Phases	4	1	2		1	6
Permitted Phases		4			6	
Actuated Green, G (s)	4.9	12.4	18.5		33.0	33.0
Effective Green, g (s)	8.9	20.4	23.0		37.5	37.5
Actuated g/C Ratio	0.17	0.39	0.44		0.72	0.72
Clearance Time (s)	7.0	7.0	7.5		7.0	7.5
Vehicle Extension (s)	2.0	2.0	2.0		2.0	2.0
Lane Grp Cap (vph)	301	707	1509		800	2533
v/s Ratio Prot	c0.05	0.02	0.11		0.05	c0.16
v/s Ratio Perm		0.03			0.10	
v/c Ratio	0.31	0.11	0.25		0.21	0.23
Uniform Delay, d1	19.1	10.2	9.3		2.5	2.5
Progression Factor	1.00	1.00	1.00		1.00	1.00
Incremental Delay, d2	0.2	0.0	0.0		0.0	0.0
Delay (s)	19.3	10.2	9.3		2.6	2.5
Level of Service	B	B	A		A	A
Approach Delay (s)	13.1		9.3			2.5
Approach LOS	B		A			A

Intersection Summary			
HCM Average Control Delay	6.6	HCM Level of Service	A
HCM Volume to Capacity ratio	0.24		
Actuated Cycle Length (s)	52.4	Sum of lost time (s)	6.0
Intersection Capacity Utilization	37.1%	ICU Level of Service	A
Analysis Period (min)	15		

c Critical Lane Group

Movement	EBL	EBT	EBR	WBL	WBT	WBR	NBL	NBT	NBR	SBL	SBT	SBR
Lane Configurations												
Ideal Flow (vphpl)	1900	1900	1900	1900	1900	1900	1900	1900	1900	1900	1900	1900
Total Lost time (s)		4.0	4.0		4.0	4.0	4.0	4.0	4.0	4.0	4.0	4.0
Lane Util. Factor		1.00	1.00		1.00	1.00	1.00	0.95	1.00	1.00	0.95	1.00
Frt		1.00	0.85		1.00	0.85	1.00	1.00	0.85	1.00	1.00	0.85
Flt Protected		0.95	1.00		0.96	1.00	0.95	1.00	1.00	0.95	1.00	1.00
Satd. Flow (prot)		1778	1583		1783	1583	1770	3539	1583	1770	3539	1583
Flt Permitted		0.67	1.00		0.72	1.00	0.34	1.00	1.00	0.58	1.00	1.00
Satd. Flow (perm)		1257	1583		1335	1583	635	3539	1583	1078	3539	1583
Volume (vph)	41	2	145	71	9	38	35	268	15	9	680	39
Peak-hour factor, PHF	0.95	0.95	0.95	0.95	0.95	0.95	0.95	0.95	0.95	0.95	0.95	0.95
Adj. Flow (vph)	43	2	153	75	9	40	37	282	16	9	716	41
RTOR Reduction (vph)	0	0	132	0	0	35	0	0	5	0	0	14
Lane Group Flow (vph)	0	45	21	0	84	5	37	282	11	9	716	27
Turn Type	Perm		Perm	Perm		Perm	pm+pt		Perm	pm+pt		Perm
Protected Phases		4			8		5	2		1	6	
Permitted Phases	4		4	8		8	2		2	6		6
Actuated Green, G (s)		9.3	9.3		9.3	9.3	61.9	58.7	58.7	57.5	56.5	56.5
Effective Green, g (s)		12.3	12.3		12.3	12.3	67.9	61.7	61.7	63.5	59.5	59.5
Actuated g/C Ratio		0.14	0.14		0.14	0.14	0.75	0.69	0.69	0.71	0.66	0.66
Clearance Time (s)		7.0	7.0		7.0	7.0	7.0	7.0	7.0	7.0	7.0	7.0
Vehicle Extension (s)		2.0	2.0		2.0	2.0	2.0	2.0	2.0	2.0	2.0	2.0
Lane Grp Cap (vph)		172	216		182	216	557	2426	1085	791	2340	1047
v/s Ratio Prot							c0.00	0.08		0.00	c0.20	
v/s Ratio Perm		0.04	0.01		c0.06	0.00	0.05		0.01	0.01		0.02
v/c Ratio		0.26	0.10		0.46	0.03	0.07	0.12	0.01	0.01	0.31	0.03
Uniform Delay, d1		34.8	34.0		35.8	33.7	3.0	4.8	4.5	3.9	6.5	5.3
Progression Factor		1.00	1.00		1.00	1.00	1.00	1.00	1.00	1.00	1.00	1.00
Incremental Delay, d2		0.3	0.1		0.7	0.0	0.0	0.1	0.0	0.0	0.3	0.0
Delay (s)		35.1	34.1		36.5	33.7	3.0	4.9	4.5	3.9	6.8	5.3
Level of Service		D	C		D	C	A	A	A	A	A	A
Approach Delay (s)		34.3			35.6			4.7			6.7	
Approach LOS		C			D			A			A	

Intersection Summary			
HCM Average Control Delay	12.6	HCM Level of Service	B
HCM Volume to Capacity ratio	0.33		
Actuated Cycle Length (s)	90.0	Sum of lost time (s)	16.0
Intersection Capacity Utilization	43.2%	ICU Level of Service	A
Analysis Period (min)	15		

c Critical Lane Group

Movement	EBL	EBT	EBR	WBL	WBT	WBR	NBL	NBT	NBR	SBL	SBT	SBR
Lane Configurations												
Ideal Flow (vphpl)	1900	1900	1900	1900	1900	1900	1900	1900	1900	1900	1900	1900
Total Lost time (s)	3.0	3.0	3.0	3.0	3.0	3.0	3.0	3.0	3.0	3.0	3.0	3.0
Lane Util. Factor	1.00	0.95	1.00	0.97	0.95	1.00	0.97	0.95	1.00	0.97	0.95	1.00
Frt	1.00	1.00	0.85	1.00	1.00	0.85	1.00	1.00	0.85	1.00	1.00	0.85
Flt Protected	0.95	1.00	1.00	0.95	1.00	1.00	0.95	1.00	1.00	0.95	1.00	1.00
Satd. Flow (prot)	1770	3539	1583	3433	3539	1583	3433	3539	1583	3433	3539	1583
Flt Permitted	0.95	1.00	1.00	0.95	1.00	1.00	0.95	1.00	1.00	0.95	1.00	1.00
Satd. Flow (perm)	1770	3539	1583	3433	3539	1583	3433	3539	1583	3433	3539	1583
Volume (vph)	123	362	217	226	138	157	125	424	319	318	379	35
Peak-hour factor, PHF	0.95	0.95	0.95	0.95	0.95	0.95	0.95	0.95	0.95	0.95	0.95	0.95
Adj. Flow (vph)	129	381	228	238	145	165	132	446	336	335	399	37
RTOR Reduction (vph)	0	0	0	0	0	0	0	0	0	0	0	0
Lane Group Flow (vph)	129	381	228	238	145	165	132	446	336	335	399	37
Turn Type	Prot		Free	Prot		Free	Prot		Free	Prot		Free
Protected Phases	7	4		3	8		5	2		1	6	
Permitted Phases			Free			Free			Free			Free
Actuated Green, G (s)	10.5	18.6	94.9	11.8	19.9	94.9	9.5	22.3	94.9	14.2	27.0	94.9
Effective Green, g (s)	14.5	22.6	94.9	15.8	23.9	94.9	13.5	26.3	94.9	18.2	31.0	94.9
Actuated g/C Ratio	0.15	0.24	1.00	0.17	0.25	1.00	0.14	0.28	1.00	0.19	0.33	1.00
Clearance Time (s)	7.0	7.0		7.0	7.0		7.0	7.0		7.0	7.0	
Vehicle Extension (s)	3.0	3.0		3.0	3.0		3.0	5.0		3.0	5.0	
Lane Grp Cap (vph)	270	843	1583	572	891	1583	488	981	1583	658	1156	1583
v/s Ratio Prot	c0.07	c0.11		0.07	0.04		0.04	c0.13		c0.10	0.11	
v/s Ratio Perm			0.14			0.10			c0.21			0.02
v/c Ratio	0.48	0.45	0.14	0.42	0.16	0.10	0.27	0.45	0.21	0.51	0.35	0.02
Uniform Delay, d1	36.7	30.9	0.0	35.4	27.7	0.0	36.3	28.4	0.0	34.3	24.2	0.0
Progression Factor	1.00	1.00	1.00	1.00	1.00	1.00	1.00	1.00	1.00	1.00	1.00	1.00
Incremental Delay, d2	1.3	0.4	0.2	0.5	0.1	0.1	0.3	0.7	0.3	0.6	0.4	0.0
Delay (s)	38.1	31.2	0.2	35.9	27.8	0.1	36.6	29.1	0.3	35.0	24.6	0.0
Level of Service	D	C	A	D	C	A	D	C	A	C	C	A
Approach Delay (s)		22.8			23.0			19.6			27.9	
Approach LOS		C			C			B			C	

Intersection Summary			
HCM Average Control Delay	23.2	HCM Level of Service	C
HCM Volume to Capacity ratio	0.47		
Actuated Cycle Length (s)	94.9	Sum of lost time (s)	12.0
Intersection Capacity Utilization	58.4%	ICU Level of Service	B
Analysis Period (min)	15		

c Critical Lane Group

Movement	EBL	EBR	NBL	NBT	SBT	SBR
Lane Configurations						
Sign Control	Stop			Free	Free	
Grade	0%			0%	0%	
Volume (veh/h)	34	20	13	886	1002	48
Peak Hour Factor	0.95	0.95	0.95	0.95	0.95	0.95
Hourly flow rate (vph)	36	21	14	933	1055	51
Pedestrians						
Lane Width (ft)						
Walking Speed (ft/s)						
Percent Blockage						
Right turn flare (veh)						
Median type	None					
Median storage veh)						
Upstream signal (ft)						
pX, platoon unblocked						
vC, conflicting volume	2040	1080	1105			
vC1, stage 1 conf vol						
vC2, stage 2 conf vol						
vCu, unblocked vol	2040	1080	1105			
tC, single (s)	6.4	6.2	4.1			
tC, 2 stage (s)						
tF (s)	3.5	3.3	2.2			
p0 queue free %	41	92	98			
cM capacity (veh/h)	61	265	632			

Direction, Lane #	EB 1	NB 1	SB 1
Volume Total	57	946	1105
Volume Left	36	14	0
Volume Right	21	0	51
cSH	85	632	1700
Volume to Capacity	0.67	0.02	0.65
Queue Length 95th (ft)	79	2	0
Control Delay (s)	108.0	0.7	0.0
Lane LOS	F	A	
Approach Delay (s)	108.0	0.7	0.0
Approach LOS	F		

Intersection Summary			
Average Delay	3.2		
Intersection Capacity Utilization	67.0%	ICU Level of Service	C
Analysis Period (min)	15		

Movement	EBL	EBT	EBR	WBL	WBT	WBR	NBL	NBT	NBR	SBL	SBT	SBR
Lane Configurations												
Ideal Flow (vphpl)	1900	1900	1900	1900	1900	1900	1900	1900	1900	1900	1900	1900
Total Lost time (s)	4.0	4.0	4.0	3.0	4.0	3.0	4.0	3.0	3.0	3.0	3.0	4.0
Lane Util. Factor	0.97	0.95	1.00	0.97	0.95	1.00	0.97	0.95	1.00	0.97	0.95	1.00
Frt	1.00	1.00	0.85	1.00	1.00	0.85	1.00	1.00	0.85	1.00	1.00	0.85
Flt Protected	0.95	1.00	1.00	0.95	1.00	1.00	0.95	1.00	1.00	0.95	1.00	1.00
Satd. Flow (prot)	3433	3539	1583	3433	3539	1583	3433	3539	1583	3433	3539	1583
Flt Permitted	0.95	1.00	1.00	0.95	1.00	1.00	0.95	1.00	1.00	0.95	1.00	1.00
Satd. Flow (perm)	3433	3539	1583	3433	3539	1583	3433	3539	1583	3433	3539	1583
Volume (vph)	217	286	469	121	279	32	378	86	112	33	178	116
Peak-hour factor, PHF	0.95	0.95	0.95	0.95	0.95	0.95	0.95	0.95	0.95	0.95	0.95	0.95
Adj. Flow (vph)	228	301	494	127	294	34	398	91	118	35	187	122
RTOR Reduction (vph)	0	0	0	0	0	0	0	0	69	0	0	0
Lane Group Flow (vph)	228	301	494	127	294	34	398	91	49	35	187	122
Turn Type	Prot		Free	Prot		Free	Prot		pm+ov	Prot		Free
Protected Phases	1	6		5	2		7	4	5	3	8	
Permitted Phases			Free			Free			4			Free
Actuated Green, G (s)	11.3	34.5	100.0	8.5	31.7	100.0	16.5	25.5	34.0	4.0	13.0	100.0
Effective Green, g (s)	14.3	37.5	100.0	12.5	34.7	100.0	19.5	29.0	41.5	8.0	16.5	100.0
Actuated g/C Ratio	0.14	0.38	1.00	0.12	0.35	1.00	0.20	0.29	0.42	0.08	0.16	1.00
Clearance Time (s)	7.0	7.0		7.0	7.0		7.0	6.5	7.0	7.0	6.5	
Vehicle Extension (s)	2.5	4.0		2.5	4.0		2.5	2.5	2.5	2.5	2.5	
Lane Grp Cap (vph)	491	1327	1583	429	1228	1583	669	1026	704	275	584	1583
v/s Ratio Prot	c0.07	0.09		0.04	0.08		c0.12	0.03	0.01	0.01	0.05	
v/s Ratio Perm			c0.31			0.02			0.02			0.08
v/c Ratio	0.46	0.23	0.31	0.30	0.24	0.02	0.59	0.09	0.07	0.13	0.32	0.08
Uniform Delay, d1	39.3	21.3	0.0	39.8	23.3	0.0	36.7	25.9	17.6	42.8	36.8	0.0
Progression Factor	1.00	1.00	1.00	1.00	1.00	1.00	1.00	1.00	1.00	1.00	1.00	1.00
Incremental Delay, d2	0.5	0.4	0.5	0.3	0.5	0.0	1.2	0.0	0.0	0.2	0.2	0.1
Delay (s)	39.8	21.7	0.5	40.0	23.7	0.0	37.8	25.9	17.7	42.9	37.0	0.1
Level of Service	D	C	A	D	C	A	D	C	B	D	D	A
Approach Delay (s)		15.5			26.5			32.1			24.5	
Approach LOS		B			C			C			C	

Intersection Summary			
HCM Average Control Delay	23.0	HCM Level of Service	C
HCM Volume to Capacity ratio	0.40		
Actuated Cycle Length (s)	100.0	Sum of lost time (s)	8.0
Intersection Capacity Utilization	47.7%	ICU Level of Service	A
Analysis Period (min)	15		
c Critical Lane Group			

Movement	EBL	EBT	EBR	WBL	WBT	WBR	NBL	NBT	NBR	SBL	SBT	SBR
Lane Configurations												
Ideal Flow (vphpl)	1900	1900	1900	1900	1900	1900	1900	1900	1900	1900	1900	1900
Total Lost time (s)	3.0	3.0	3.0	3.0	3.0	3.0	3.0	3.0	3.0	3.0	3.0	3.0
Lane Util. Factor	0.97	1.00	1.00	1.00	0.95	1.00	0.97	0.95	1.00	1.00	0.95	1.00
Frt	1.00	1.00	0.85	1.00	1.00	0.85	1.00	1.00	0.85	1.00	1.00	0.85
Flt Protected	0.95	1.00	1.00	0.95	1.00	1.00	0.95	1.00	1.00	0.95	1.00	1.00
Satd. Flow (prot)	3433	1863	1583	1770	3539	1583	3433	3539	1583	1770	3539	1583
Flt Permitted	0.95	1.00	1.00	0.95	1.00	1.00	0.95	1.00	1.00	0.95	1.00	1.00
Satd. Flow (perm)	3433	1863	1583	1770	3539	1583	3433	3539	1583	1770	3539	1583
Volume (vph)	72	50	79	190	197	18	161	611	220	4	666	116
Peak-hour factor, PHF	0.95	0.95	0.95	0.95	0.95	0.95	0.95	0.95	0.95	0.95	0.95	0.95
Adj. Flow (vph)	76	53	83	200	207	19	169	643	232	4	701	122
RTOR Reduction (vph)	0	0	72	0	0	15	0	0	116	0	0	71
Lane Group Flow (vph)	76	53	11	200	207	4	169	643	116	4	701	51
Turn Type	Prot		Perm	Prot		Perm	Prot		Perm	Prot		Perm
Protected Phases	7	4		3	8		1	6		5	2	
Permitted Phases			4			8			6			2
Actuated Green, G (s)	7.6	7.6	7.6	15.4	15.4	15.4	10.1	44.9	44.9	1.8	36.6	36.6
Effective Green, g (s)	11.6	12.6	12.6	19.4	20.4	20.4	14.1	49.4	49.4	5.8	41.1	41.1
Actuated g/C Ratio	0.12	0.13	0.13	0.20	0.21	0.21	0.14	0.50	0.50	0.06	0.41	0.41
Clearance Time (s)	7.0	8.0	8.0	7.0	8.0	8.0	7.0	7.5	7.5	7.0	7.5	7.5
Vehicle Extension (s)	3.0	3.0	3.0	3.0	3.0	3.0	3.0	3.0	3.0	3.0	3.0	3.0
Lane Grp Cap (vph)	401	237	201	346	728	326	488	1762	788	103	1466	656
v/s Ratio Prot	0.02	0.03		c0.11	c0.06		c0.05	0.18		0.00	c0.20	
v/s Ratio Perm			0.01			0.00			0.07			0.03
v/c Ratio	0.19	0.22	0.05	0.58	0.28	0.01	0.35	0.36	0.15	0.04	0.48	0.08
Uniform Delay, d1	39.6	38.9	38.1	36.2	33.2	31.4	38.4	15.3	13.5	44.1	21.2	17.6
Progression Factor	1.00	1.00	1.00	1.00	1.00	1.00	1.00	1.00	1.00	1.00	1.00	1.00
Incremental Delay, d2	0.2	0.5	0.1	2.3	0.2	0.0	0.4	0.1	0.1	0.2	0.2	0.1
Delay (s)	39.8	39.4	38.2	38.5	33.5	31.4	38.8	15.4	13.6	44.2	21.5	17.6
Level of Service	D	D	D	D	C	C	D	B	B	D	C	B
Approach Delay (s)		39.1			35.7			18.8			21.0	
Approach LOS		D			D			B			C	

Intersection Summary			
HCM Average Control Delay	24.1	HCM Level of Service	C
HCM Volume to Capacity ratio	0.44		
Actuated Cycle Length (s)	99.2	Sum of lost time (s)	9.0
Intersection Capacity Utilization	65.5%	ICU Level of Service	C
Analysis Period (min)	15		
c Critical Lane Group			

Movement	EBL	EBR	NBL	NBT	SBT	SBR
Lane Configurations						
Ideal Flow (vphpl)	1900	1900	1900	1900	1900	1900
Total Lost time (s)	3.0	3.0	3.0	3.0	3.0	3.0
Lane Util. Factor	1.00	1.00	1.00	0.95	0.95	1.00
Frt	1.00	0.85	1.00	1.00	1.00	0.85
Flt Protected	0.95	1.00	0.95	1.00	1.00	1.00
Satd. Flow (prot)	1770	1583	1770	3539	3539	1583
Flt Permitted	0.95	1.00	0.26	1.00	1.00	1.00
Satd. Flow (perm)	1770	1583	476	3539	3539	1583
Volume (vph)	97	54	172	986	751	142
Peak-hour factor, PHF	0.95	0.95	0.95	0.95	0.95	0.95
Adj. Flow (vph)	102	57	181	1038	791	149
RTOR Reduction (vph)	0	47	0	0	0	47
Lane Group Flow (vph)	102	10	181	1038	791	102
Turn Type		Perm	pm+pt			pm+ov
Protected Phases	4		1	6	2	4
Permitted Phases		4	6			2
Actuated Green, G (s)	7.9	7.9	43.7	43.7	29.1	37.0
Effective Green, g (s)	11.9	11.9	47.2	47.2	32.6	44.5
Actuated g/C Ratio	0.18	0.18	0.73	0.73	0.50	0.68
Clearance Time (s)	7.0	7.0	7.0	6.5	6.5	7.0
Vehicle Extension (s)	3.0	3.0	4.0	4.0	4.0	3.0
Lane Grp Cap (vph)	324	289	576	2566	1772	1155
v/s Ratio Prot	c0.06		0.06	c0.29	c0.22	0.02
v/s Ratio Perm		0.01	0.17			0.05
v/c Ratio	0.31	0.04	0.31	0.40	0.45	0.09
Uniform Delay, d1	23.1	21.9	3.8	3.5	10.4	3.5
Progression Factor	1.00	1.00	1.00	1.00	1.00	1.00
Incremental Delay, d2	0.6	0.1	0.4	0.1	0.2	0.0
Delay (s)	23.6	21.9	4.2	3.6	10.7	3.5
Level of Service	C	C	A	A	B	A
Approach Delay (s)	23.0			3.7	9.6	
Approach LOS	C			A	A	

Intersection Summary

HCM Average Control Delay	7.4	HCM Level of Service	A
HCM Volume to Capacity ratio	0.41		
Actuated Cycle Length (s)	65.1	Sum of lost time (s)	9.0
Intersection Capacity Utilization	45.7%	ICU Level of Service	A
Analysis Period (min)	15		

c Critical Lane Group

Movement	EBL	EBT	EBR	WBL	WBT	WBR	NBL	NBT	NBR	SBL	SBT	SBR
Lane Configurations												
Ideal Flow (vphpl)	1900	1900	1900	1900	1900	1900	1900	1900	1900	1900	1900	1900
Total Lost time (s)	3.0	3.0	3.0	3.0	3.0	3.0	3.0	3.0	3.0	3.0	3.0	3.0
Lane Util. Factor	1.00	0.91	1.00	1.00	0.91	1.00	1.00	0.95	1.00	0.97	0.95	1.00
Frt	1.00	1.00	0.85	1.00	1.00	0.85	1.00	1.00	0.85	1.00	1.00	0.85
Flt Protected	0.95	1.00	1.00	0.95	1.00	1.00	0.95	1.00	1.00	0.95	1.00	1.00
Satd. Flow (prot)	1770	5085	1583	1770	5085	1583	1770	3539	1583	3433	3539	1583
Flt Permitted	0.95	1.00	1.00	0.95	1.00	1.00	0.95	1.00	1.00	0.95	1.00	1.00
Satd. Flow (perm)	1770	5085	1583	1770	5085	1583	1770	3539	1583	3433	3539	1583
Volume (vph)	148	1161	252	103	385	382	62	227	110	729	535	413
Peak-hour factor, PHF	0.95	0.95	0.95	0.95	0.95	0.95	0.95	0.95	0.95	0.95	0.95	0.95
Adj. Flow (vph)	156	1222	265	108	405	381	65	239	116	767	563	435
RTOR Reduction (vph)	0	0	0	0	0	0	0	0	9	0	0	102
Lane Group Flow (vph)	156	1222	265	108	405	381	65	239	107	767	563	333
Turn Type	Prot		Free	Prot		Free	Prot		pm+ov	Prot		pm+ov
Protected Phases	1	6		5	2		3	8	5	7	4	1
Permitted Phases			Free			Free			8			4
Actuated Green, G (s)	15.9	45.9	130.0	12.6	42.6	130.0	6.3	14.1	26.7	29.9	37.7	53.6
Effective Green, g (s)	19.9	49.9	130.0	16.6	46.6	130.0	10.3	17.6	34.2	33.9	41.2	61.1
Actuated g/C Ratio	0.15	0.38	1.00	0.13	0.36	1.00	0.08	0.14	0.26	0.26	0.32	0.47
Clearance Time (s)	7.0	7.0		7.0	7.0		7.0	6.5	7.0	7.0	6.5	7.0
Vehicle Extension (s)	2.0	3.0		2.0	3.0		2.0	2.0	2.0	2.0	2.0	2.0
Lane Grp Cap (vph)	271	1952	1583	226	1823	1583	140	479	453	895	1122	781
v/s Ratio Prot	c0.09	c0.24		0.06	0.08		0.04	0.07	0.03	c0.22	c0.16	0.07
v/s Ratio Perm			0.17			0.24			0.04			0.15
v/c Ratio	0.58	0.63	0.17	0.48	0.22	0.24	0.46	0.50	0.24	0.86	0.50	0.43
Uniform Delay, d1	51.1	32.5	0.0	52.7	29.1	0.0	57.2	52.1	37.6	45.7	36.1	22.8
Progression Factor	1.00	1.00	1.00	1.09	0.55	1.00	1.00	1.00	1.00	1.00	1.00	1.00
Incremental Delay, d2	1.8	1.5	0.2	0.6	0.3	0.4	0.9	0.3	0.1	7.8	0.1	0.1
Delay (s)	53.0	34.0	0.2	58.1	16.2	0.4	58.1	52.4	37.7	53.6	36.2	23.0
Level of Service	D	C	A	E	B	A	E	D	D	D	D	C
Approach Delay (s)		30.4			14.5			49.2			40.5	
Approach LOS		C			B			D			D	

Intersection Summary

HCM Average Control Delay	32.8	HCM Level of Service	C
HCM Volume to Capacity ratio	0.66		
Actuated Cycle Length (s)	130.0	Sum of lost time (s)	6.0
Intersection Capacity Utilization	68.5%	ICU Level of Service	C
Analysis Period (min)	15		

c Critical Lane Group

Movement	EBL	EBT	EBR	WBL	WBT	WBR	NBL	NBT	NBR	SBL	SBT	SBR
Lane Configurations												
Ideal Flow (vphpl)	1900	1900	1900	1900	1900	1900	1900	1900	1900	1900	1900	1900
Total Lost time (s)	3.0	3.0	3.0	3.0	3.0	3.0	3.0	3.0	3.0	3.0	3.0	
Lane Util. Factor	1.00	0.91	1.00	1.00	0.91	1.00	1.00	0.95	1.00	1.00	0.95	
Frt	1.00	1.00	0.85	1.00	1.00	0.85	1.00	1.00	0.85	1.00	0.91	
Flt Protected	0.95	1.00	1.00	0.95	1.00	1.00	0.95	1.00	1.00	0.95	1.00	
Satd. Flow (prot)	1770	5085	1583	1770	5085	1583	1770	3539	1583	1770	3227	
Flt Permitted	0.95	1.00	1.00	0.95	1.00	1.00	0.73	1.00	1.00	0.55	1.00	
Satd. Flow (perm)	1770	5085	1583	1770	5085	1583	1367	3539	1583	1028	3227	
Volume (vph)	57	1923	43	235	740	112	24	55	90	92	13	19
Peak-hour factor, PHF	0.95	0.95	0.95	0.95	0.95	0.95	0.95	0.95	0.95	0.95	0.95	0.95
Adj. Flow (vph)	60	2024	45	247	779	118	25	58	95	97	14	20
RTOR Reduction (vph)	0	0	20	0	0	29	0	0	0	0	17	0
Lane Group Flow (vph)	60	2024	25	247	779	89	25	58	95	97	17	0
Turn Type	Prot		pm+ov	Prot		pm+ov	pm+pt		Free	pm+pt		
Protected Phases	1	6	3	5	2	7	3	8		7	4	
Permitted Phases			6			2	8		Free	4		
Actuated Green, G (s)	5.6	62.8	66.0	22.4	79.1	92.9	9.7	6.5	130.0	25.3	17.1	
Effective Green, g (s)	9.6	66.3	71.5	25.9	82.6	98.4	15.2	10.0	130.0	28.8	20.6	
Actuated g/C Ratio	0.07	0.51	0.55	0.20	0.64	0.76	0.12	0.08	1.00	0.22	0.16	
Clearance Time (s)	7.0	6.5	5.0	6.5	6.5	5.0	5.0	6.5		5.0	6.5	
Vehicle Extension (s)	2.0	3.0	2.0	2.0	3.0	2.0	2.0	2.0		2.0	2.0	
Lane Grp Cap (vph)	131	2593	907	353	3231	1235	176	272	1583	318	511	
v/s Ratio Prot	0.03	c0.40	0.00	c0.14	0.15	0.01	0.01	0.02		c0.04	0.01	
v/s Ratio Perm			0.01			0.05	0.01		0.06	c0.03		
v/c Ratio	0.46	0.78	0.03	0.70	0.24	0.07	0.14	0.21	0.06	0.31	0.03	
Uniform Delay, d1	57.7	25.9	13.4	48.4	10.2	4.1	51.4	56.3	0.0	41.7	46.3	
Progression Factor	1.12	0.71	0.15	1.19	0.81	0.46	1.00	1.00	1.00	1.00	1.00	
Incremental Delay, d2	0.7	1.8	0.0	4.5	0.2	0.0	0.1	0.1	0.1	0.2	0.1	
Delay (s)	65.4	20.1	2.0	62.2	8.4	1.9	51.6	56.5	0.1	41.9	46.4	
Level of Service	E	C	A	E	A	A	D	E	A	D	D	
Approach Delay (s)		21.0			19.3			25.7			43.1	
Approach LOS		C			B			C			D	

Intersection Summary			
HCM Average Control Delay	21.5	HCM Level of Service	C
HCM Volume to Capacity ratio	0.65		
Actuated Cycle Length (s)	130.0	Sum of lost time (s)	9.0
Intersection Capacity Utilization	71.9%	ICU Level of Service	C
Analysis Period (min)	15		

c Critical Lane Group

Movement	EBL	EBT	EBR	WBL	WBT	WBR	NBL	NBT	NBR	SBL	SBT	SBR
Lane Configurations												
Ideal Flow (vphpl)	1900	1900	1900	1900	1900	1900	1900	1900	1900	1900	1900	1900
Total Lost time (s)	3.0	3.0	3.0	3.0	3.0	3.0	3.0	3.0	3.0	3.0	3.0	3.0
Lane Util. Factor	0.97	0.91	1.00	0.97	0.91	1.00	1.00	0.95	1.00	0.97	0.95	1.00
Frt	1.00	1.00	0.85	1.00	1.00	0.85	1.00	1.00	0.85	1.00	1.00	0.85
Flt Protected	0.95	1.00	1.00	0.95	1.00	1.00	0.95	1.00	1.00	0.95	1.00	1.00
Satd. Flow (prot)	3433	5085	1583	3433	5085	1583	1770	3539	1583	3433	3539	1583
Flt Permitted	0.95	1.00	1.00	0.95	1.00	1.00	0.95	1.00	1.00	0.95	1.00	1.00
Satd. Flow (perm)	3433	5085	1583	3433	5085	1583	1770	3539	1583	3433	3539	1583
Volume (vph)	126	2113	18	413	979	719	130	559	1299	673	244	80
Peak-hour factor, PHF	0.95	0.95	0.95	0.95	0.95	0.95	0.95	0.95	0.95	0.95	0.95	0.95
Adj. Flow (vph)	133	2224	19	435	1031	757	137	588	1367	708	257	84
RTOR Reduction (vph)	0	0	10	0	0	0	0	0	0	0	0	0
Lane Group Flow (vph)	133	2224	9	435	1031	757	137	588	1367	708	257	84
Turn Type	Prot		Perm	Prot		Free	Split		Free	Split		Free
Protected Phases	5	2		1	6		4	4		3	3	
Permitted Phases			2			Free			Free			Free
Actuated Green, G (s)	7.0	56.8	56.8	15.0	64.8	130.0	10.5	10.5	130.0	18.7	18.7	130.0
Effective Green, g (s)	11.0	61.3	61.3	19.0	69.3	130.0	15.0	15.0	130.0	22.7	22.7	130.0
Actuated g/C Ratio	0.08	0.47	0.47	0.15	0.53	1.00	0.12	0.12	1.00	0.17	0.17	1.00
Clearance Time (s)	7.0	7.5	7.5	7.0	7.5		7.5	7.5		7.0	7.0	
Vehicle Extension (s)	3.0	4.0	4.0	3.0	4.0		3.0	3.0		3.0	3.0	
Lane Grp Cap (vph)	290	2398	746	502	2711	1583	204	408	1583	599	618	1583
v/s Ratio Prot	0.04	c0.44		0.13	0.20		0.08	c0.17		c0.21	0.07	
v/s Ratio Perm			0.01			0.48			c0.86			0.05
v/c Ratio	0.46	0.93	0.01	0.87	0.38	0.48	0.67	1.44	0.86	1.18	0.42	0.05
Uniform Delay, d1	56.7	32.3	18.3	54.3	17.8	0.0	55.1	57.5	0.0	53.6	47.7	0.0
Progression Factor	0.84	1.40	1.63	1.00	1.00	1.00	1.00	1.00	1.00	1.00	1.00	1.00
Incremental Delay, d2	0.9	6.0	0.0	14.5	0.4	1.0	8.4	212.0	6.5	98.2	0.5	0.1
Delay (s)	48.6	51.2	29.8	68.8	18.2	1.0	63.5	269.5	6.5	151.8	48.2	0.1
Level of Service	D	D	C	E	B	A	E	F	A	F	D	A
Approach Delay (s)		50.9			22.2			84.2			114.3	
Approach LOS		D			C			F			F	

Intersection Summary			
HCM Average Control Delay	60.3	HCM Level of Service	E
HCM Volume to Capacity ratio	1.03		
Actuated Cycle Length (s)	130.0	Sum of lost time (s)	9.0
Intersection Capacity Utilization	100.6%	ICU Level of Service	G
Analysis Period (min)	15		

c Critical Lane Group

Movement	EBL	EBT	EBR	WBL	WBT	WBR	NBL	NBT	NBR	SBL	SBT	SBR
Lane Configurations												
Ideal Flow (vphpl)	1900	1900	1900	1900	1900	1900	1900	1900	1900	1900	1900	1900
Total Lost time (s)	3.0	3.0	3.0	3.0	3.0	3.0	3.0	3.0	3.0	3.0	3.0	3.0
Lane Util. Factor	0.97	0.86	1.00	0.97	0.86	1.00	0.91	0.86	0.91	0.91	0.91	1.00
Frt	1.00	1.00	0.85	1.00	1.00	0.85	1.00	1.00	0.85	1.00	1.00	0.85
Flt Protected	0.95	1.00	1.00	0.95	1.00	1.00	0.95	1.00	1.00	0.95	0.97	1.00
Satd. Flow (prot)	3433	6408	1583	3433	6408	1583	1610	3204	1441	1610	3294	1583
Flt Permitted	0.95	1.00	1.00	0.95	1.00	1.00	0.95	1.00	1.00	0.95	0.97	1.00
Satd. Flow (perm)	3433	6408	1583	3433	6408	1583	1610	3204	1441	1610	3294	1583
Volume (vph)	120	3056	10	427	1999	198	7	5	53	149	53	62
Peak-hour factor, PHF	0.95	0.95	0.95	0.95	0.95	0.95	0.95	0.95	0.95	0.95	0.95	0.95
Adj. Flow (vph)	126	3217	11	449	2104	208	7	5	56	157	56	65
RTOR Reduction (vph)	0	0	5	0	0	0	0	0	0	0	0	0
Lane Group Flow (vph)	126	3217	6	449	2104	208	7	5	56	79	134	65
Turn Type	Prot		Perm	Prot		Free	Split		Free	Split		Free
Protected Phases	1	6		5	2		4	4		3	3	
Permitted Phases			6			Free			Free			Free
Actuated Green, G (s)	7.5	66.8	66.8	17.8	77.1	125.0	2.4	2.4	125.0	10.0	10.0	125.0
Effective Green, g (s)	11.5	70.8	70.8	21.8	81.1	125.0	6.4	6.4	125.0	14.0	14.0	125.0
Actuated g/C Ratio	0.09	0.57	0.57	0.17	0.65	1.00	0.05	0.05	1.00	0.11	0.11	1.00
Clearance Time (s)	7.0	7.0	7.0	7.0	7.0		7.0	7.0		7.0	7.0	
Vehicle Extension (s)	2.0	3.0	3.0	2.0	3.0		3.0	3.0		3.0	3.0	
Lane Grp Cap (vph)	316	3629	897	599	4158	1583	82	164	1441	180	369	1583
v/s Ratio Prot	0.04	c0.50		c0.13	0.33		0.00	0.00		c0.05	0.04	
v/s Ratio Perm			0.00			c0.13			0.04			0.04
v/c Ratio	0.40	0.89	0.01	0.75	0.51	0.13	0.09	0.03	0.04	0.44	0.36	0.04
Uniform Delay, d1	53.5	23.6	11.8	49.0	11.5	0.0	56.5	56.4	0.0	51.8	51.4	0.0
Progression Factor	1.00	1.00	1.00	1.00	1.00	1.00	1.00	1.00	1.00	1.00	1.00	1.00
Incremental Delay, d2	0.3	3.6	0.0	4.5	0.4	0.2	0.5	0.1	0.1	1.7	0.6	0.0
Delay (s)	53.8	27.2	11.8	53.5	11.9	0.2	57.0	56.4	0.1	53.5	52.0	0.0
Level of Service	D	C	B	D	B	A	E	E	A	D	D	A
Approach Delay (s)		28.2			17.8			10.1			40.3	
Approach LOS		C			B			B			D	

Intersection Summary			
HCM Average Control Delay	24.1	HCM Level of Service	C
HCM Volume to Capacity ratio	0.75		
Actuated Cycle Length (s)	125.0	Sum of lost time (s)	9.0
Intersection Capacity Utilization	77.3%	ICU Level of Service	D
Analysis Period (min)	15		

c Critical Lane Group

Movement	EBL	EBT	EBR	WBL	WBT	WBR	NBL	NBT	NBR	SBL	SBT	SBR
Lane Configurations												
Ideal Flow (vphpl)	1900	1900	1900	1900	1900	1900	1900	1900	1900	1900	1900	1900
Total Lost time (s)		3.0		3.0	3.0			3.0	3.0		3.0	
Lane Util. Factor		0.95		1.00	0.95			1.00	1.00		1.00	
Frt		0.98		1.00	1.00			1.00	0.85		0.91	
Flt Protected		1.00		0.95	1.00			0.95	1.00		0.99	
Satd. Flow (prot)		3450		1770	3536			1776	1583		1676	
Flt Permitted		0.91		0.10	1.00			0.95	1.00		0.99	
Satd. Flow (perm)		3146		192	3536			1776	1583		1676	
Volume (vph)	24	952	188	218	1111	7	118	3	144	4	3	14
Peak-hour factor, PHF	0.95	0.95	0.95	0.95	0.95	0.95	0.95	0.95	0.95	0.95	0.95	0.95
Adj. Flow (vph)	25	1002	198	229	1169	7	124	3	152	4	3	15
RTOR Reduction (vph)	0	14	0	0	0	0	0	0	0	0	14	0
Lane Group Flow (vph)	0	1211	0	229	1176	0	0	127	152	0	8	0
Turn Type	Perm			pm+pt			Split		pm+ov	Split		
Protected Phases		6		5	2		4	4	5	8	8	
Permitted Phases	6			2					4			
Actuated Green, G (s)		35.0		49.8	49.8			8.3	17.6		2.3	
Effective Green, g (s)		38.0		52.8	52.8			11.3	23.1		5.3	
Actuated g/C Ratio		0.48		0.67	0.67			0.14	0.29		0.07	
Clearance Time (s)		6.0		5.5	6.0			6.0	5.5		6.0	
Vehicle Extension (s)		4.0		2.0	4.0			3.0	2.0		3.0	
Lane Grp Cap (vph)		1525		367	2381			256	466		113	
v/s Ratio Prot				c0.09	0.33			c0.07	0.05		c0.00	
v/s Ratio Perm		c0.38		0.33					0.05			
v/c Ratio		0.79		0.62	0.49			0.50	0.33		0.07	
Uniform Delay, d1		16.9		14.0	6.3			30.9	21.6		34.2	
Progression Factor		1.00		1.00	1.00			1.00	1.00		1.00	
Incremental Delay, d2		3.1		2.4	0.2			1.5	0.1		0.3	
Delay (s)		20.0		16.4	6.5			32.4	21.7		34.5	
Level of Service		C		B	A			C	C		C	
Approach Delay (s)		20.0			8.1			26.6			34.5	
Approach LOS		C			A			C			C	

Intersection Summary			
HCM Average Control Delay	15.0	HCM Level of Service	B
HCM Volume to Capacity ratio	0.66		
Actuated Cycle Length (s)	78.4	Sum of lost time (s)	12.0
Intersection Capacity Utilization	87.3%	ICU Level of Service	E
Analysis Period (min)	15		

c Critical Lane Group

Movement	EBL	EBT	WBT	WBR	SBL	SBR
Lane Configurations						
Ideal Flow (vphpl)	1900	1900	1900	1900	1900	1900
Total Lost time (s)	3.0	3.0	3.0	3.0	3.0	3.0
Lane Util. Factor	0.97	0.95	0.91	0.91	0.97	1.00
Frt	1.00	1.00	0.99	0.85	1.00	0.85
Flt Protected	0.95	1.00	1.00	1.00	0.95	1.00
Satd. Flow (prot)	3433	3539	3361	1441	3433	1583
Flt Permitted	0.95	1.00	1.00	1.00	0.95	1.00
Satd. Flow (perm)	3433	3539	3361	1441	3433	1583
Volume (vph)	659	422	412	362	286	538
Peak-hour factor, PHF	0.95	0.95	0.95	0.95	0.95	0.95
Adj. Flow (vph)	694	444	434	381	301	566
RTOR Reduction (vph)	0	0	3	12	0	426
Lane Group Flow (vph)	694	444	457	343	301	140
Turn Type	Prot			pm+ov		Perm
Protected Phases	5	2	6	4	4	
Permitted Phases				6		4
Actuated Green, G (s)	18.9	44.9	19.0	32.5	13.5	13.5
Effective Green, g (s)	22.9	48.9	23.0	41.0	18.0	18.0
Actuated g/C Ratio	0.31	0.67	0.32	0.56	0.25	0.25
Clearance Time (s)	7.0	7.0	7.0	7.5	7.5	7.5
Vehicle Extension (s)	2.0	3.0	3.0	3.0	3.0	3.0
Lane Grp Cap (vph)	1078	2374	1060	870	848	391
v/s Ratio Prot	c0.20	0.13	c0.14	c0.10	0.09	
v/s Ratio Perm				0.14		0.09
v/c Ratio	0.64	0.19	0.43	0.39	0.35	0.36
Uniform Delay, d1	21.5	4.5	19.8	9.0	22.7	22.7
Progression Factor	1.00	1.00	1.00	1.00	1.00	1.00
Incremental Delay, d2	1.0	0.0	0.3	0.3	0.3	0.6
Delay (s)	22.5	4.6	20.1	9.3	22.9	23.2
Level of Service	C	A	C	A	C	C
Approach Delay (s)		15.5	15.4		23.1	
Approach LOS		B	B		C	

Intersection Summary			
HCM Average Control Delay	17.8	HCM Level of Service	B
HCM Volume to Capacity ratio	0.49		
Actuated Cycle Length (s)	72.9	Sum of lost time (s)	6.0
Intersection Capacity Utilization	55.2%	ICU Level of Service	B
Analysis Period (min)	15		

c Critical Lane Group

Movement	EBL	EBT	EBR	WBL	WBT	WBR	NBL	NBT	NBR	SBL	SBT	SBR
Lane Configurations												
Sign Control		Stop			Stop			Free			Free	
Grade		0%			0%			0%			0%	
Volume (veh/h)	88	0	117	9	0	26	143	816	63	190	789	158
Peak Hour Factor	0.95	0.95	0.95	0.95	0.95	0.95	0.95	0.95	0.95	0.95	0.95	0.95
Hourly flow rate (vph)	93	0	123	9	0	27	151	859	66	200	831	166
Pedestrians												
Lane Width (ft)												
Walking Speed (ft/s)												
Percent Blockage												
Right turn flare (veh)												
Median type		None			None							
Median storage veh)												
Upstream signal (ft)											940	
pX, platoon unblocked												
vC, conflicting volume	1988	2457	415	2098	2557	429	997			925		
vC1, stage 1 conf vol												
vC2, stage 2 conf vol												
vCu, unblocked vol	1988	2457	415	2098	2557	429	997			925		
tC, single (s)	7.5	6.5	6.9	7.5	6.5	6.9	4.1			4.1		
tC, 2 stage (s)												
tF (s)	3.5	4.0	3.3	3.5	4.0	3.3	2.2			2.2		
p0 queue free %	0	100	79	39	100	95	78			73		
cM capacity (veh/h)	23	17	586	16	15	574	690			734		

Direction, Lane #	EB 1	EB 2	WB 1	WB 2	WB 3	NB 1	NB 2	NB 3	NB 4	SB 1	SB 2	SB 3
Volume Total	93	123	9	0	27	151	429	429	66	200	415	415
Volume Left	93	0	9	0	0	151	0	0	0	200	0	0
Volume Right	0	123	0	0	27	0	0	0	66	0	0	0
cSH	23	586	16	1700	574	690	1700	1700	1700	734	1700	1700
Volume to Capacity	4.07	0.21	0.61	0.00	0.05	0.22	0.25	0.25	0.04	0.27	0.24	0.24
Queue Length 95th (ft)	Err	20	39	0	4	21	0	0	0	28	0	0
Control Delay (s)	Err	12.8	415.2	0.0	11.6	11.7	0.0	0.0	0.0	11.7	0.0	0.0
Lane LOS	F	B	F	A	B	B				B		
Approach Delay (s)	4299.5		115.4			1.6				2.0		
Approach LOS	F		F									

Intersection Summary			
Average Delay	370.7		
Intersection Capacity Utilization	54.6%	ICU Level of Service	A
Analysis Period (min)	15		

Movement	EBL	EBT	WBT	WBR	SWL	SWR
Lane Configurations		↑↑	↑↑			↱↑
Sign Control		Free	Free		Stop	
Grade		0%	0%		0%	
Volume (veh/h)	0	64	234	0	0	127
Peak Hour Factor	0.92	0.92	0.92	0.92	0.92	0.92
Hourly flow rate (vph)	0	70	254	0	0	138
Pedestrians						
Lane Width (ft)						
Walking Speed (ft/s)						
Percent Blockage						
Right turn flare (veh)						
Median type					None	
Median storage veh)						
Upstream signal (ft)						
pX, platoon unblocked						
vC, conflicting volume	254				289	127
vC1, stage 1 conf vol						
vC2, stage 2 conf vol						
vCu, unblocked vol	254				289	127
tC, single (s)	4.1				6.8	6.9
tC, 2 stage (s)						
tF (s)	2.2				3.5	3.3
p0 queue free %	100				100	85
cM capacity (veh/h)	1308				678	899

Direction, Lane #	EB 1	EB 2	WB 1	WB 2	SW 1	SW 2
Volume Total	35	35	127	127	69	69
Volume Left	0	0	0	0	0	0
Volume Right	0	0	0	0	69	69
cSH	1700	1700	1700	1700	899	899
Volume to Capacity	0.02	0.02	0.07	0.07	0.08	0.08
Queue Length 95th (ft)	0	0	0	0	6	6
Control Delay (s)	0.0	0.0	0.0	0.0	9.3	9.3
Lane LOS					A	A
Approach Delay (s)	0.0		0.0		9.3	
Approach LOS					A	

Intersection Summary			
Average Delay	2.8		
Intersection Capacity Utilization	17.6%	ICU Level of Service	A
Analysis Period (min)	15		

HCM Signalized Intersection Capacity Analysis
1: Route 7 & Janelia Farm Blvd

Kincora
Future Background 2011

Movement	EBL	EBT	EBR	WBL	WBT	WBR	NBL	NBT	NBR	SBL	SBT	SBR
Lane Configurations												1900
Ideal Flow (vphpl)	1900	1900	1900	1900	1900	1900	1900	1900	1900	1900	1900	
Total Lost time (s)	3.0	3.0	3.0	3.0	3.0	3.0	3.0	3.0	3.0	3.0	3.0	
Lane Util. Factor	0.97	0.86	1.00	0.97	0.86	1.00	0.97	1.00	1.00	0.97	0.95	
Frt	1.00	1.00	0.85	1.00	1.00	0.85	1.00	1.00	0.85	1.00	0.91	
Flt Protected	0.95	1.00	1.00	0.95	1.00	1.00	0.95	1.00	1.00	0.95	1.00	
Satd. Flow (prot)	3433	6225	1583	3433	6225	1583	3433	1863	1583	3433	3231	
Flt Permitted	0.95	1.00	1.00	0.95	1.00	1.00	0.95	1.00	1.00	0.95	1.00	
Satd. Flow (perm)	3433	6225	1583	3433	6225	1583	3433	1863	1583	3433	3231	
Volume (vph)	232	2287	258	552	3905	572	509	119	422	508	167	232
Peak-hour factor, PHF	0.95	0.95	0.95	0.95	0.95	0.95	0.95	0.95	0.95	0.95	0.95	0.95
Adj. Flow (vph)	244	2407	272	581	4111	602	536	125	444	535	176	244
RTOR Reduction (vph)	0	0	0	0	0	35	0	0	1	0	68	0
Lane Group Flow (vph)	244	2407	272	581	4111	567	536	125	443	535	352	0
Heavy Vehicles (%)	2%	5%	2%	2%	5%	2%	2%	2%	2%	2%	2%	2%
Turn Type	Prot		Free	Prot		pm+ov	Prot		pm+ov	Prot		
Protected Phases	1	6		5	2	3	7	4	5	3	8	
Permitted Phases			Free			2			4			
Actuated Green, G (s)	5.0	55.0	121.0	17.0	67.0	79.0	16.0	9.0	26.0	12.0	5.0	
Effective Green, g (s)	9.0	59.0	121.0	21.0	71.0	87.0	20.0	13.0	34.0	16.0	9.0	
Actuated g/C Ratio	0.07	0.49	1.00	0.17	0.59	0.72	0.17	0.11	0.28	0.13	0.07	
Clearance Time (s)	7.0	7.0		7.0	7.0	7.0	7.0	7.0	7.0	7.0	7.0	
Vehicle Extension (s)	2.0	3.0		2.0	3.0	3.0	2.0	2.0	2.0	3.0	3.0	
Lane Grp Cap (vph)	255	3035	1583	596	3653	1177	567	200	484	454	240	
v/s Ratio Prot	0.07	0.39		c0.17	c0.66	0.05	c0.16	0.07	c0.16	c0.16	c0.11	
v/s Ratio Perm			0.17			0.29			0.12			
v/c Ratio	0.96	0.79	0.17	0.97	1.13	0.48	0.95	0.62	0.91	1.18	1.47	
Uniform Delay, d1	55.8	25.9	0.0	49.7	25.0	7.3	50.0	51.7	42.1	52.5	56.0	
Progression Factor	1.00	1.00	1.00	1.00	1.00	1.00	1.00	1.00	1.00	1.00	1.00	
Incremental Delay, d2	43.8	2.2	0.2	30.2	60.5	0.3	24.5	4.3	21.4	101.1	232.2	
Delay (s)	99.6	28.1	0.2	79.9	85.5	7.6	74.5	56.0	63.5	153.6	288.2	
Level of Service	F	C	A	E	F	A	E	E	E	F	F	
Approach Delay (s)		31.5			76.1			68.0			212.8	
Approach LOS		C			E			E			F	

Intersection Summary			
HCM Average Control Delay	75.2	HCM Level of Service	E
HCM Volume to Capacity ratio	1.10		
Actuated Cycle Length (s)	121.0	Sum of lost time (s)	6.0
Intersection Capacity Utilization	103.1%	ICU Level of Service	G
Analysis Period (min)	15		

c Critical Lane Group

HCM Signalized Intersection Capacity Analysis
2: Route 7 & Smith Circle

Kincora
Future Background 2011

Movement	EBL	EBT	EBR	WBL	WBT	WBR	NBL	NBT	NBR	SBL	SBT	SBR
Lane Configurations												
Ideal Flow (vphpl)	1900	1900	1900	1900	1900	1900	1900	1900	1900	1900	1900	1900
Total Lost time (s)	3.0	3.0	3.0	3.0	3.0	3.0	3.0	3.0	3.0		3.0	
Lane Util. Factor	1.00	0.86	1.00	0.97	0.86	1.00	0.95	0.95	1.00		1.00	
Frt	1.00	1.00	0.85	1.00	1.00	0.85	1.00	1.00	0.85		0.95	
Flt Protected	0.95	1.00	1.00	0.95	1.00	1.00	0.95	0.97	1.00		0.98	
Satd. Flow (prot)	1770	6225	1583	3433	6225	1583	1681	1709	1583		1729	
Flt Permitted	0.95	1.00	1.00	0.95	1.00	1.00	0.95	0.97	1.00		0.98	
Satd. Flow (perm)	1770	6225	1583	3433	6225	1583	1681	1709	1583		1729	
Volume (vph)	200	3001	13	254	5023	17	23	4	231	14	7	13
Peak-hour factor, PHF	0.95	0.95	0.95	0.95	0.95	0.95	0.95	0.95	0.95	0.95	0.95	0.95
Adj. Flow (vph)	211	3159	14	267	5287	18	24	4	243	15	7	14
RTOR Reduction (vph)	0	0	3	0	0	4	0	0	0	0	13	0
Lane Group Flow (vph)	211	3159	11	267	5287	14	14	14	243	0	23	0
Heavy Vehicles (%)	2%	5%	2%	2%	5%	2%	2%	2%	2%	2%	2%	2%
Turn Type	Prot		pm+ov	Prot		pm+ov	Split		Free	Split		
Protected Phases	1	6	4	5	2	3	4	4		3	3	
Permitted Phases			6			2			Free			
Actuated Green, G (s)	19.0	124.8	129.6	14.1	119.9	124.7	4.8	4.8	177.0		4.8	
Effective Green, g (s)	23.0	129.3	138.1	18.1	124.4	133.2	8.8	8.8	177.0		8.8	
Actuated g/C Ratio	0.13	0.73	0.78	0.10	0.70	0.75	0.05	0.05	1.00		0.05	
Clearance Time (s)	7.0	7.5	7.0	7.0	7.5	7.0	7.0	7.0			7.0	
Vehicle Extension (s)	3.0	3.0	3.0	3.0	3.0	3.0	3.0	3.0			3.0	
Lane Grp Cap (vph)	230	4547	1235	351	4375	1218	84	85	1583		86	
v/s Ratio Prot	c0.12	0.51	0.00	0.08	c0.85	0.00	0.01	0.01			c0.01	
v/s Ratio Perm			0.01			0.01			c0.15			
v/c Ratio	0.92	0.69	0.01	0.76	1.21	0.01	0.17	0.16	0.15		0.26	
Uniform Delay, d1	76.1	13.1	4.3	77.3	26.3	5.5	80.6	80.6	0.0		81.0	
Progression Factor	1.00	1.00	1.00	1.00	1.00	1.00	1.00	1.00	1.00		1.00	
Incremental Delay, d2	37.2	0.9	0.0	9.4	96.1	0.0	0.9	0.9	0.2		1.6	
Delay (s)	113.3	13.9	4.3	86.7	122.4	5.5	81.5	81.5	0.2		82.6	
Level of Service	F	B	A	F	F	A	F	F	A		F	
Approach Delay (s)		20.1			120.3			8.6			82.6	
Approach LOS		C			F			A			F	

Intersection Summary			
HCM Average Control Delay	80.3	HCM Level of Service	F
HCM Volume to Capacity ratio	1.05		
Actuated Cycle Length (s)	177.0	Sum of lost time (s)	9.0
Intersection Capacity Utilization	102.5%	ICU Level of Service	G
Analysis Period (min)	15		

c Critical Lane Group

HCM Signalized Intersection Capacity Analysis
3: Route 7 & Loudoun County Parkway

Kincora
Future Background 2011

Movement	EBL	EBT	EBR	WBL	WBT	WBR	NBL	NBT	NBR	SBL	SBT	SBR
Lane Configurations												
Ideal Flow (vphpl)	1900	1900	1900	1900	1900	1900	1900	1900	1900	1900	1900	1900
Total Lost time (s)	3.0	3.0	3.0	3.0	3.0	3.0	3.0	3.0	3.0	3.0	3.0	3.0
Lane Util. Factor	1.00	0.86	1.00	0.97	0.86	1.00	1.00	1.00	1.00	0.97	1.00	1.00
Frt	1.00	1.00	0.85	1.00	1.00	0.85	1.00	1.00	0.85	1.00	1.00	0.85
Flt Protected	0.95	1.00	1.00	0.95	1.00	1.00	0.95	1.00	1.00	0.95	1.00	1.00
Satd. Flow (prot)	1770	6225	1583	3433	6225	1583	1770	1863	1583	3433	1863	1583
Flt Permitted	0.95	1.00	1.00	0.95	1.00	1.00	0.95	1.00	1.00	0.95	1.00	1.00
Satd. Flow (perm)	1770	6225	1583	3433	6225	1583	1770	1863	1583	3433	1863	1583
Volume (vph)	192	2892	392	567	4370	22	957	119	809	98	130	301
Peak-hour factor, PHF	0.95	0.95	0.95	0.95	0.95	0.95	0.95	0.95	0.95	0.95	0.95	0.95
Adj. Flow (vph)	202	3044	413	597	4600	23	1007	125	852	103	137	317
RTOR Reduction (vph)	0	0	0	0	0	6	0	0	0	0	0	0
Lane Group Flow (vph)	202	3044	413	597	4600	17	1007	125	852	103	137	317
Heavy Vehicles (%)	2%	5%	2%	2%	5%	2%	2%	2%	2%	2%	2%	2%
Turn Type	Prot		Free	Prot		pm+ov	Prot		Free	Prot		pm+ov
Protected Phases	1	6		5	2	7	3	8		7	4	1
Permitted Phases			Free			2			Free			4
Actuated Green, G (s)	6.0	97.5	160.0	10.0	101.5	107.5	17.0	17.0	160.0	6.0	6.0	12.0
Effective Green, g (s)	10.0	102.0	160.0	14.0	106.0	116.0	21.0	22.0	160.0	10.0	11.0	21.0
Actuated g/C Ratio	0.06	0.64	1.00	0.09	0.66	0.72	0.13	0.14	1.00	0.06	0.07	0.13
Clearance Time (s)	7.0	7.5		7.0	7.5	7.0	7.0	8.0		7.0	8.0	7.0
Vehicle Extension (s)	2.0	3.0		2.0	3.0	2.0	2.0	2.0		2.0	2.0	2.0
Lane Grp Cap (vph)	111	3968	1583	300	4124	1177	232	256	1583	215	128	237
v/s Ratio Prot	0.11	0.49		c0.17	c0.74	0.00	c0.57	0.07		0.03	0.07	c0.08
v/s Ratio Perm			0.26			0.01			0.54			0.12
v/c Ratio	1.82	0.77	0.26	1.99	1.12	0.01	4.34	0.49	0.54	0.48	1.07	1.34
Uniform Delay, d1	75.0	20.6	0.0	73.0	27.0	6.1	69.5	63.8	0.0	72.5	74.5	69.5
Progression Factor	1.00	1.00	1.00	1.00	1.00	1.00	1.00	1.00	1.00	1.00	1.00	1.00
Incremental Delay, d2	402.0	1.5	0.4	457.3	55.9	0.0	1513.2	0.5	1.3	0.6	99.6	177.6
Delay (s)	477.0	22.0	0.4	530.3	82.9	6.1	1582.7	64.3	1.3	73.1	174.1	247.1
Level of Service	F	C	A	F	F	A	F	E	A	E	F	F
Approach Delay (s)		44.7			133.7			808.0			197.0	
Approach LOS		D			F			F			F	

Intersection Summary

HCM Average Control Delay	225.4	HCM Level of Service	F
HCM Volume to Capacity ratio	1.66		
Actuated Cycle Length (s)	160.0	Sum of lost time (s)	9.0
Intersection Capacity Utilization	147.2%	ICU Level of Service	H
Analysis Period (min)	15		

c Critical Lane Group

HCM Signalized Intersection Capacity Analysis
4: Route 7 & George Washington Blvd.

Kincora
Future Background 2011

Movement	EBL	EBT	EBR	WBL	WBT	WBR	NBL	NBT	NBR	SBL	SBT	SBR
Lane Configurations												
Ideal Flow (vphpl)	1900	1900	1900	1900	1900	1900	1900	1900	1900	1900	1900	1900
Total Lost time (s)	3.0	3.0	3.0	3.0	3.0	3.0	3.0	3.0		3.0	3.0	
Lane Util. Factor	0.97	0.86	1.00	1.00	0.86	1.00	1.00	1.00		0.97	1.00	
Frt	1.00	1.00	0.85	1.00	1.00	0.85	1.00	0.85		1.00	0.85	
Flt Protected	0.95	1.00	1.00	0.95	1.00	1.00	0.95	1.00		0.95	1.00	
Satd. Flow (prot)	3433	6225	1583	1770	6225	1583	1770	1583		3433	1588	
Flt Permitted	0.95	1.00	1.00	0.95	1.00	1.00	0.95	1.00		0.95	1.00	
Satd. Flow (perm)	3433	6225	1583	1770	6225	1583	1770	1583		3433	1588	
Volume (vph)	246	3046	7	10	4521	497	14	0	16	317	1	55
Peak-hour factor, PHF	0.95	0.95	0.95	0.95	0.95	0.95	0.95	0.95	0.95	0.95	0.95	0.95
Adj. Flow (vph)	259	3206	7	11	4759	523	15	0	17	334	1	58
RTOR Reduction (vph)	0	0	2	0	0	48	0	16	0	0	52	0
Lane Group Flow (vph)	259	3206	5	11	4759	475	15	1	0	334	7	0
Heavy Vehicles (%)	2%	5%	2%	2%	5%	2%	2%	2%	2%	2%	2%	2%
Turn Type	Prot		pm+ov	Prot		pm+ov	Split			Split		
Protected Phases	1	6	3	5	2	4	3	3		4	4	
Permitted Phases			6			2						
Actuated Green, G (s)	18.1	124.2	125.4	4.0	110.1	123.7	1.2	1.2		13.6	13.6	
Effective Green, g (s)	22.1	129.2	134.4	8.0	115.1	132.7	5.2	5.2		17.6	17.6	
Actuated g/C Ratio	0.13	0.75	0.78	0.05	0.67	0.77	0.03	0.03		0.10	0.10	
Clearance Time (s)	7.0	8.0	7.0	7.0	8.0	7.0	7.0	7.0		7.0	7.0	
Vehicle Extension (s)	3.0	3.0	3.0	3.0	3.0	3.0	3.0	3.0		3.0	3.0	
Lane Grp Cap (vph)	441	4676	1265	82	4166	1221	54	48		351	162	
v/s Ratio Prot	c0.08	0.52	0.00	0.01	c0.76	0.04	c0.01	0.00		c0.10	0.00	
v/s Ratio Perm			0.00			0.26						
v/c Ratio	0.59	0.69	0.00	0.13	1.14	0.39	0.28	0.01		0.95	0.04	
Uniform Delay, d1	70.7	11.0	4.1	78.7	28.5	6.4	81.6	80.9		76.8	69.6	
Progression Factor	1.00	1.00	1.00	1.00	1.00	1.00	1.00	1.00		1.00	1.00	
Incremental Delay, d2	2.0	0.8	0.0	0.7	67.4	0.2	2.8	0.1		35.4	0.1	
Delay (s)	72.7	11.8	4.1	79.4	95.8	6.6	84.4	81.0		112.1	69.7	
Level of Service	E	B	A	E	F	A	F	F		F	E	
Approach Delay (s)		16.3			87.0			82.6			105.8	
Approach LOS		B			F			F			F	

Intersection Summary

HCM Average Control Delay	61.1	HCM Level of Service	E
HCM Volume to Capacity ratio	1.02		
Actuated Cycle Length (s)	172.0	Sum of lost time (s)	12.0
Intersection Capacity Utilization	99.6%	ICU Level of Service	F
Analysis Period (min)	15		

c Critical Lane Group

Movement	EBL	EBT	EBR	WBL	WBT	WBR	NBL	NBT	NBR	SBL	SBT	SBR
Lane Configurations												
Ideal Flow (vphpl)	1900	1900	1900	1900	1900	1900	1900	1900	1900	1900	1900	1900
Total Lost time (s)	3.0	3.0	3.0	3.0	3.0	3.0	3.0	3.0	3.0	3.0	3.0	3.0
Lane Util. Factor	0.97	0.86	1.00	0.97	0.86	1.00	0.97	0.95	1.00	0.97	0.95	1.00
Frt	1.00	1.00	0.85	1.00	1.00	0.85	1.00	1.00	0.85	1.00	1.00	0.85
Flt Protected	0.95	1.00	1.00	0.95	1.00	1.00	0.95	1.00	1.00	0.95	1.00	1.00
Satd. Flow (prot)	3433	6408	1583	3433	6408	1583	3433	3539	1583	3433	3539	1583
Flt Permitted	0.95	1.00	1.00	0.95	1.00	1.00	0.95	1.00	1.00	0.95	1.00	1.00
Satd. Flow (perm)	3433	6408	1583	3433	6408	1583	3433	3539	1583	3433	3539	1583
Volume (vph)	451	1921	158	643	2327	214	225	148	383	186	163	286
Peak-hour factor, PHF	0.95	0.95	0.95	0.95	0.95	0.95	0.95	0.95	0.95	0.95	0.95	0.95
Adj. Flow (vph)	475	2022	166	677	2449	225	237	156	403	196	172	301
RTOR Reduction (vph)	0	0	0	0	0	51	0	0	0	0	0	4
Lane Group Flow (vph)	475	2022	166	677	2449	174	237	156	403	196	172	297
Turn Type	Prot		Free	Prot		pm+ov	Prot		Free	Prot		pm+ov
Protected Phases	1	6		5	2	3	7	4		3	8	1
Permitted Phases			Free			2			Free			8
Actuated Green, G (s)	24.6	64.9	150.0	34.0	74.3	86.2	10.0	11.2	150.0	11.9	13.1	37.7
Effective Green, g (s)	28.6	68.9	150.0	38.0	78.3	94.2	14.0	15.2	150.0	15.9	17.1	45.7
Actuated g/C Ratio	0.19	0.46	1.00	0.25	0.52	0.63	0.09	0.10	1.00	0.11	0.11	0.30
Clearance Time (s)	7.0	7.0		7.0	7.0	7.0	7.0	7.0		7.0	7.0	7.0
Vehicle Extension (s)	2.0	2.0		3.0	2.0	2.0	2.0	2.0		2.0	2.0	2.0
Lane Grp Cap (vph)	655	2943	1583	870	3345	1026	320	359	1583	364	403	514
v/s Ratio Prot	0.14	0.32		c0.20	c0.38	0.02	c0.07	0.04		0.06	0.05	c0.11
v/s Ratio Perm			0.10			0.09			c0.25			0.08
v/c Ratio	0.73	0.69	0.10	0.78	0.73	0.17	0.74	0.43	0.25	0.54	0.43	0.58
Uniform Delay, d1	57.0	32.0	0.0	52.1	27.7	11.6	66.2	63.4	0.0	63.6	61.9	44.0
Progression Factor	1.00	1.00	1.00	1.00	1.00	1.00	1.00	1.00	1.00	1.00	1.00	1.00
Incremental Delay, d2	3.4	1.3	0.1	4.4	1.5	0.0	7.8	0.3	0.4	0.8	0.3	1.0
Delay (s)	60.4	33.4	0.1	56.5	29.2	11.6	74.1	63.7	0.4	64.3	62.2	45.0
Level of Service	E	C	A	E	C	B	E	E	A	E	E	D
Approach Delay (s)		36.1			33.5			34.7			55.1	
Approach LOS		D			C			C			E	

Intersection Summary			
HCM Average Control Delay	36.5	HCM Level of Service	D
HCM Volume to Capacity ratio	0.71		
Actuated Cycle Length (s)	150.0	Sum of lost time (s)	6.0
Intersection Capacity Utilization	71.3%	ICU Level of Service	C
Analysis Period (min)	15		

c Critical Lane Group

Movement	EBL	EBT	EBR	WBL	WBT	WBR	NBL	NBT	NBR	SBL	SBT	SBR
Lane Configurations												
Ideal Flow (vphpl)	1900	1900	1900	1900	1900	1900	1900	1900	1900	1900	1900	1900
Total Lost time (s)	3.0	3.0	3.0	3.0	3.0	3.0	3.0	3.0	3.0	3.0	3.0	3.0
Lane Util. Factor	0.97	0.86	1.00	1.00	0.86	1.00	0.97	1.00	1.00	0.97	1.00	1.00
Frt	1.00	1.00	0.85	1.00	1.00	0.85	1.00	1.00	0.85	1.00	1.00	0.85
Flt Protected	0.95	1.00	1.00	0.95	1.00	1.00	0.95	1.00	1.00	0.95	1.00	1.00
Satd. Flow (prot)	3433	6408	1583	1770	6408	1583	3433	1863	1583	3433	1863	1583
Flt Permitted	0.95	1.00	1.00	0.95	1.00	1.00	0.95	1.00	1.00	0.95	1.00	1.00
Satd. Flow (perm)	3433	6408	1583	1770	6408	1583	3433	1863	1583	3433	1863	1583
Volume (vph)	263	2072	25	74	2522	161	391	97	234	225	77	234
Peak-hour factor, PHF	0.95	0.95	0.95	0.95	0.95	0.95	0.95	0.95	0.95	0.95	0.95	0.95
Adj. Flow (vph)	277	2181	26	78	2655	169	412	102	246	237	81	246
RTOR Reduction (vph)	0	0	0	0	0	0	0	0	92	0	0	0
Lane Group Flow (vph)	277	2181	26	78	2655	169	412	102	154	237	81	246
Turn Type	Prot		Free	Prot		Free	Split		pm+ov	Split		pm+ov
Protected Phases	1	6		5	2		4	4	5	3	3	1
Permitted Phases			Free			Free			4			3
Actuated Green, G (s)	7.0	47.9	120.0	8.1	49.0	120.0	22.9	22.9	31.0	13.1	13.1	20.1
Effective Green, g (s)	11.0	51.9	120.0	12.1	53.0	120.0	26.9	26.9	39.0	17.1	17.1	28.1
Actuated g/C Ratio	0.09	0.43	1.00	0.10	0.44	1.00	0.22	0.22	0.32	0.14	0.14	0.23
Clearance Time (s)	7.0	7.0		7.0	7.0		7.0	7.0	7.0	7.0	7.0	7.0
Vehicle Extension (s)	2.0	4.0		2.0	4.0		3.0	3.0	2.0	3.0	3.0	2.0
Lane Grp Cap (vph)	315	2771	1583	178	2830	1583	770	418	554	489	265	371
v/s Ratio Prot	c0.08	0.34		0.04	c0.41		c0.12	0.05	0.03	0.07	0.04	c0.06
v/s Ratio Perm			0.02			c0.11			0.07			0.09
v/c Ratio	0.88	0.79	0.02	0.44	0.94	0.11	0.54	0.24	0.28	0.48	0.31	0.66
Uniform Delay, d1	53.8	29.3	0.0	50.8	31.9	0.0	41.0	38.2	30.0	47.4	46.1	41.7
Progression Factor	1.00	1.00	1.00	1.00	1.00	1.00	1.00	1.00	1.00	1.00	1.00	1.00
Incremental Delay, d2	22.5	2.3	0.0	0.6	7.6	0.1	0.7	0.3	0.1	0.8	0.7	3.4
Delay (s)	76.4	31.6	0.0	51.4	39.5	0.1	41.8	38.5	30.1	48.2	46.8	45.1
Level of Service	E	C	A	D	D	A	D	D	C	D	D	D
Approach Delay (s)		36.3			37.5			37.6			46.6	
Approach LOS		D			D			D			D	

Intersection Summary			
HCM Average Control Delay	37.8	HCM Level of Service	D
HCM Volume to Capacity ratio	0.77		
Actuated Cycle Length (s)	120.0	Sum of lost time (s)	9.0
Intersection Capacity Utilization	72.2%	ICU Level of Service	C
Analysis Period (min)	15		

c Critical Lane Group

Movement	WBL	WBR	NBT	NBR	SBL	SBT
Lane Configurations						
Ideal Flow (vphpl)	1900	1900	1900	1900	1900	1900
Total Lost time (s)	3.0	3.0	3.0		3.0	3.0
Lane Util. Factor	1.00	1.00	0.95		1.00	0.95
Frt	1.00	0.85	0.98		1.00	1.00
Flt Protected	0.95	1.00	1.00		0.95	1.00
Satd. Flow (prot)	1770	1583	3453		1770	3539
Flt Permitted	0.95	1.00	1.00		0.23	1.00
Satd. Flow (perm)	1770	1583	3453		434	3539
Volume (vph)	112	262	601	117	250	534
Peak-hour factor, PHF	0.95	0.95	0.95	0.95	0.95	0.95
Adj. Flow (vph)	118	276	633	123	263	562
RTOR Reduction (vph)	0	115	14	0	0	0
Lane Group Flow (vph)	118	161	742	0	263	562
Turn Type		prn+ov			pm+pt	
Protected Phases	4	1	2		1	6
Permitted Phases		4			6	
Actuated Green, G (s)	6.9	15.5	18.0		33.6	33.6
Effective Green, g (s)	10.9	23.5	22.5		38.1	38.1
Actuated g/C Ratio	0.20	0.43	0.41		0.69	0.69
Clearance Time (s)	7.0	7.0	7.5		7.0	7.5
Vehicle Extension (s)	2.0	2.0	2.0		2.0	2.0
Lane Grp Cap (vph)	351	763	1413		607	2452
v/s Ratio Prot	c0.07	0.05	c0.21		c0.10	0.16
v/s Ratio Perm		0.05			0.20	
v/c Ratio	0.34	0.21	0.52		0.43	0.23
Uniform Delay, d1	18.9	9.9	12.2		4.3	3.1
Progression Factor	1.00	1.00	1.00		1.00	1.00
Incremental Delay, d2	0.2	0.1	0.2		0.2	0.0
Delay (s)	19.1	10.0	12.4		4.5	3.1
Level of Service	B	A	B		A	A
Approach Delay (s)	12.7		12.4			3.5
Approach LOS	B		B			A

Intersection Summary			
HCM Average Control Delay	8.8	HCM Level of Service	A
HCM Volume to Capacity ratio	0.46		
Actuated Cycle Length (s)	55.0	Sum of lost time (s)	9.0
Intersection Capacity Utilization	50.4%	ICU Level of Service	A
Analysis Period (min)	15		
c Critical Lane Group			

Movement	EBL	EBT	EBR	WBL	WBT	WBR	NBL	NBT	NBR	SBL	SBT	SBR
Lane Configurations												
Ideal Flow (vphpl)	1900	1900	1900	1900	1900	1900	1900	1900	1900	1900	1900	1900
Total Lost time (s)		4.0	4.0		4.0	4.0	4.0	4.0	4.0	4.0	4.0	4.0
Lane Util. Factor		1.00	1.00		1.00	1.00	1.00	0.95	1.00	1.00	0.95	1.00
Frt		1.00	0.85		1.00	0.85	1.00	1.00	0.85	1.00	1.00	0.85
Flt Protected		0.96	1.00		0.95	1.00	0.95	1.00	1.00	0.95	1.00	1.00
Satd. Flow (prot)		1779	1583		1770	1583	1770	3539	1583	1770	3539	1583
Flt Permitted		0.71	1.00		0.74	1.00	0.41	1.00	1.00	0.35	1.00	1.00
Satd. Flow (perm)		1323	1583		1370	1583	757	3539	1583	658	3539	1583
Volume (vph)	29	2	82	37	0	30	148	739	83	29	539	72
Peak-hour factor, PHF	0.95	0.95	0.95	0.95	0.95	0.95	0.95	0.95	0.95	0.95	0.95	0.95
Adj. Flow (vph)	31	2	86	39	0	32	156	778	87	31	567	76
RTOR Reduction (vph)	0	0	70	0	0	27	0	0	25	0	0	24
Lane Group Flow (vph)	0	33	16	0	39	5	156	778	62	31	567	52
Turn Type	Perm		pm+ov	Perm		pm+ov	pm+pt		Perm	pm+pt		Perm
Protected Phases		4	5		8	1	5	2		1	6	
Permitted Phases	4		4	8		8	2		2	6		6
Actuated Green, G (s)		4.9	10.9		4.9	7.9	67.1	61.1	61.1	61.1	58.1	58.1
Effective Green, g (s)		7.9	16.9		7.9	13.9	73.1	64.1	64.1	67.1	61.1	61.1
Actuated g/C Ratio		0.09	0.19		0.09	0.15	0.81	0.71	0.71	0.75	0.68	0.68
Clearance Time (s)		7.0	7.0		7.0	7.0	7.0	7.0	7.0	7.0	7.0	7.0
Vehicle Extension (s)		2.0	2.0		2.0	2.0	2.0	2.0	2.0	2.0	2.0	2.0
Lane Grp Cap (vph)		116	368		120	315	716	2521	1127	565	2403	1075
v/s Ratio Prot			0.00			0.00	c0.02	c0.22		0.00	0.16	
v/s Ratio Perm		0.02	0.01		c0.03	0.00	0.16		0.04	0.04		0.03
v/c Ratio		0.28	0.04		0.33	0.02	0.22	0.31	0.05	0.05	0.24	0.05
Uniform Delay, d1		38.4	29.9		38.5	32.3	1.9	4.8	3.9	3.0	5.5	4.8
Progression Factor		1.00	1.00		1.00	1.00	1.00	1.00	1.00	1.00	1.00	1.00
Incremental Delay, d2		0.5	0.0		0.6	0.0	0.1	0.3	0.1	0.0	0.2	0.1
Delay (s)		38.9	30.0		39.1	32.3	2.0	5.1	4.0	3.0	5.8	4.9
Level of Service		D	C		D	C	A	A	A	A	A	A
Approach Delay (s)		32.4			36.0			4.5			5.5	
Approach LOS		C			D			A			A	

Intersection Summary			
HCM Average Control Delay	7.8	HCM Level of Service	A
HCM Volume to Capacity ratio	0.31		
Actuated Cycle Length (s)	90.0	Sum of lost time (s)	12.0
Intersection Capacity Utilization	42.5%	ICU Level of Service	A
Analysis Period (min)	15		
c Critical Lane Group			

Movement	EBL	EBT	EBR	WBL	WBT	WBR	NBL	NBT	NBR	SBL	SBT	SBR
Lane Configurations												
Ideal Flow (vphpl)	1900	1900	1900	1900	1900	1900	1900	1900	1900	1900	1900	1900
Total Lost time (s)	3.0	3.0	3.0	3.0	3.0	3.0	3.0	3.0	3.0	3.0	3.0	3.0
Lane Util. Factor	1.00	0.95	1.00	0.97	0.95	1.00	0.97	0.95	1.00	0.97	0.95	1.00
Frt	1.00	1.00	0.85	1.00	1.00	0.85	1.00	1.00	0.85	1.00	1.00	0.85
Flt Protected	0.95	1.00	1.00	0.95	1.00	1.00	0.95	1.00	1.00	0.95	1.00	1.00
Satd. Flow (prot)	1770	3539	1583	3433	3539	1583	3433	3539	1583	3433	3539	1583
Flt Permitted	0.95	1.00	1.00	0.95	1.00	1.00	0.95	1.00	1.00	0.95	1.00	1.00
Satd. Flow (perm)	1770	3539	1583	3433	3539	1583	3433	3539	1583	3433	3539	1583
Volume (vph)	105	109	240	202	207	306	341	756	160	164	615	178
Peak-hour factor, PHF	0.95	0.95	0.95	0.95	0.95	0.95	0.95	0.95	0.95	0.95	0.95	0.95
Adj. Flow (vph)	111	115	253	213	218	322	359	796	168	173	647	187
RTOR Reduction (vph)	0	0	0	0	0	0	0	0	0	0	0	0
Lane Group Flow (vph)	111	115	253	213	218	322	359	796	168	173	647	187
Turn Type	Prot		Free	Prot		Free	Prot		Free	Prot		Free
Protected Phases	7	4		3	8		5	2		1	6	
Permitted Phases			Free			Free			Free			Free
Actuated Green, G (s)	9.7	11.9	97.3	13.9	16.1	97.3	14.9	32.7	97.3	10.8	28.6	97.3
Effective Green, g (s)	13.7	15.9	97.3	17.9	20.1	97.3	18.9	36.7	97.3	14.8	32.6	97.3
Actuated g/C Ratio	0.14	0.16	1.00	0.18	0.21	1.00	0.19	0.38	1.00	0.15	0.34	1.00
Clearance Time (s)	7.0	7.0		7.0	7.0		7.0	7.0		7.0	7.0	
Vehicle Extension (s)	3.0	3.0		3.0	3.0		3.0	5.0		3.0	5.0	
Lane Grp Cap (vph)	249	578	1583	632	731	1583	667	1335	1583	522	1186	1583
v/s Ratio Prot	c0.06	0.03		c0.06	c0.06		c0.10	c0.22		0.05	0.18	
v/s Ratio Perm			0.16			0.20			0.11			0.12
v/c Ratio	0.45	0.20	0.16	0.34	0.30	0.20	0.54	0.60	0.11	0.33	0.55	0.12
Uniform Delay, d1	38.3	35.2	0.0	34.5	32.6	0.0	35.3	24.3	0.0	36.8	26.3	0.0
Progression Factor	1.00	1.00	1.00	1.00	1.00	1.00	1.00	1.00	1.00	1.00	1.00	1.00
Incremental Delay, d2	1.3	0.2	0.2	0.3	0.2	0.3	0.8	1.1	0.1	0.4	0.9	0.2
Delay (s)	39.6	35.4	0.2	34.9	32.9	0.3	36.1	25.4	0.1	37.2	27.2	0.2
Level of Service	D	D	A	C	C	A	D	C	A	D	C	A
Approach Delay (s)		17.8			19.5			25.1			23.9	
Approach LOS		B			B			C			C	

Intersection Summary			
HCM Average Control Delay	22.6	HCM Level of Service	C
HCM Volume to Capacity ratio	0.48		
Actuated Cycle Length (s)	97.3	Sum of lost time (s)	6.0
Intersection Capacity Utilization	59.2%	ICU Level of Service	B
Analysis Period (min)	15		

c Critical Lane Group

Movement	EBL	EBR	NBL	NBT	SBT	SBR
Lane Configurations						
Sign Control	Stop			Free	Free	
Grade	0%			0%	0%	
Volume (veh/h)	75	19	10	1443	1030	23
Peak Hour Factor	0.95	0.95	0.95	0.95	0.95	0.95
Hourly flow rate (vph)	79	20	11	1519	1084	24
Pedestrians						
Lane Width (ft)						
Walking Speed (ft/s)						
Percent Blockage						
Right turn flare (veh)						
Median type	None					
Median storage veh)						
Upstream signal (ft)						
pX, platoon unblocked						
vC, conflicting volume	2636	1096	1108			
vC1, stage 1 conf vol						
vC2, stage 2 conf vol						
vCu, unblocked vol	2636	1096	1108			
tC, single (s)	6.4	6.2	4.1			
tC, 2 stage (s)						
tF (s)	3.5	3.3	2.2			
p0 queue free %	0	92	98			
cM capacity (veh/h)	25	259	630			

Direction, Lane #	EB 1	NB 1	SB 1
Volume Total	99	1529	1108
Volume Left	79	11	0
Volume Right	20	0	24
cSH	31	630	1700
Volume to Capacity	3.18	0.02	0.65
Queue Length 95th (ft)	Err	1	0
Control Delay (s)	Err	1.8	0.0
Lane LOS	F	A	
Approach Delay (s)	Err	1.8	0.0
Approach LOS	F		

Intersection Summary			
Average Delay	362.5		
Intersection Capacity Utilization	95.9%	ICU Level of Service	F
Analysis Period (min)	15		

Movement	EBL	EBT	EBR	WBL	WBT	WBR	NBL	NBT	NBR	SBL	SBT	SBR
Lane Configurations												
Ideal Flow (vphpl)	1900	1900	1900	1900	1900	1900	1900	1900	1900	1900	1900	1900
Total Lost time (s)	4.0	4.0	4.0	3.0	4.0	3.0	4.0	3.0	3.0	3.0	3.0	4.0
Lane Util. Factor	0.97	0.95	1.00	0.97	0.95	1.00	0.97	0.95	1.00	0.97	0.95	1.00
Frt	1.00	1.00	0.85	1.00	1.00	0.85	1.00	1.00	0.85	1.00	1.00	0.85
Flt Protected	0.95	1.00	1.00	0.95	1.00	1.00	0.95	1.00	1.00	0.95	1.00	1.00
Satd. Flow (prot)	3433	3539	1583	3433	3539	1583	3433	3539	1583	3433	3539	1583
Flt Permitted	0.95	1.00	1.00	0.95	1.00	1.00	0.95	1.00	1.00	0.95	1.00	1.00
Satd. Flow (perm)	3433	3539	1583	3433	3539	1583	3433	3539	1583	3433	3539	1583
Volume (vph)	392	430	433	223	570	85	1129	346	287	52	206	360
Peak-hour factor, PHF	0.95	0.95	0.95	0.95	0.95	0.95	0.95	0.95	0.95	0.95	0.95	0.95
Adj. Flow (vph)	413	453	456	235	600	89	1188	364	302	55	217	379
RTOR Reduction (vph)	0	0	0	0	0	0	0	0	178	0	0	0
Lane Group Flow (vph)	413	453	456	235	600	89	1188	364	124	55	217	379
Turn Type	Prot		Free	Prot		Free	Prot		pm+ov	Prot		Free
Protected Phases	1	6		5	2		7	4	5	3	8	
Permitted Phases			Free			Free			4			Free
Actuated Green, G (s)	15.8	33.5	100.0	11.8	29.5	100.0	15.0	21.7	33.5	5.5	12.2	100.0
Effective Green, g (s)	18.8	36.5	100.0	15.8	32.5	100.0	18.0	25.2	41.0	9.5	15.7	100.0
Actuated g/C Ratio	0.19	0.36	1.00	0.16	0.32	1.00	0.18	0.25	0.41	0.10	0.16	1.00
Clearance Time (s)	7.0	7.0		7.0	7.0		7.0	6.5	7.0	7.0	6.5	
Vehicle Extension (s)	2.5	4.0		2.5	4.0		2.5	2.5	2.5	2.5	2.5	
Lane Grp Cap (vph)	645	1292	1583	542	1150	1583	618	892	697	326	556	1583
v/s Ratio Prot	c0.12	0.13		0.07	c0.17		c0.35	c0.10	0.03	0.02	0.06	
v/s Ratio Perm			c0.29			0.06			0.05			0.24
v/c Ratio	0.64	0.35	0.29	0.43	0.52	0.06	1.92	0.41	0.18	0.17	0.39	0.24
Uniform Delay, d1	37.5	23.1	0.0	38.1	27.4	0.0	41.0	31.2	18.8	41.6	37.9	0.0
Progression Factor	1.00	1.00	1.00	1.00	1.00	1.00	1.00	1.00	1.00	1.00	1.00	1.00
Incremental Delay, d2	1.9	0.8	0.5	0.4	1.7	0.1	421.0	0.2	0.1	0.2	0.3	0.4
Delay (s)	39.4	23.9	0.5	38.5	29.1	0.1	462.0	31.4	18.9	41.8	38.2	0.4
Level of Service	D	C	A	D	C	A	F	C	B	D	D	A
Approach Delay (s)		20.6			28.7			305.3			16.5	
Approach LOS		C			C			F			B	

Intersection Summary			
HCM Average Control Delay	132.7	HCM Level of Service	F
HCM Volume to Capacity ratio	0.80		
Actuated Cycle Length (s)	100.0	Sum of lost time (s)	12.0
Intersection Capacity Utilization	78.2%	ICU Level of Service	D
Analysis Period (min)	15		

c Critical Lane Group

Movement	EBL	EBT	EBR	WBL	WBT	WBR	NBL	NBT	NBR	SBL	SBT	SBR
Lane Configurations												
Ideal Flow (vphpl)	1900	1900	1900	1900	1900	1900	1900	1900	1900	1900	1900	1900
Total Lost time (s)	3.0	3.0	3.0	3.0	3.0	3.0	3.0	3.0	3.0	3.0	3.0	3.0
Lane Util. Factor	0.97	1.00	1.00	1.00	0.95	1.00	0.97	0.95	1.00	1.00	0.95	1.00
Frt	1.00	1.00	0.85	1.00	1.00	0.85	1.00	1.00	0.85	1.00	1.00	0.85
Flt Protected	0.95	1.00	1.00	0.95	1.00	1.00	0.95	1.00	1.00	0.95	1.00	1.00
Satd. Flow (prot)	3433	1863	1583	1770	3539	1583	3433	3539	1583	1770	3539	1583
Flt Permitted	0.95	1.00	1.00	0.95	1.00	1.00	0.95	1.00	1.00	0.95	1.00	1.00
Satd. Flow (perm)	3433	1863	1583	1770	3539	1583	3433	3539	1583	1770	3539	1583
Volume (vph)	329	285	260	238	162	33	244	1229	298	4	874	258
Peak-hour factor, PHF	0.95	0.95	0.95	0.95	0.95	0.95	0.95	0.95	0.95	0.95	0.95	0.95
Adj. Flow (vph)	346	300	274	251	171	35	257	1294	314	4	920	272
RTOR Reduction (vph)	0	0	234	0	0	27	0	0	138	0	0	166
Lane Group Flow (vph)	346	300	40	251	171	8	257	1294	176	4	920	106
Turn Type	Prot		Perm	Prot		Perm	Prot		Perm	Prot		Perm
Protected Phases	7	4		3	8		1	6		5	2	
Permitted Phases			4			8			6			2
Actuated Green, G (s)	10.0	10.0	10.0	18.3	18.3	18.3	10.0	44.2	44.2	1.9	36.1	36.1
Effective Green, g (s)	14.0	15.0	15.0	22.3	23.3	23.3	14.0	48.7	48.7	5.9	40.6	40.6
Actuated g/C Ratio	0.13	0.14	0.14	0.21	0.22	0.22	0.13	0.47	0.47	0.06	0.39	0.39
Clearance Time (s)	7.0	8.0	8.0	7.0	8.0	8.0	7.0	7.5	7.5	7.0	7.5	7.5
Vehicle Extension (s)	3.0	3.0	3.0	3.0	3.0	3.0	3.0	3.0	3.0	3.0	3.0	3.0
Lane Grp Cap (vph)	463	269	229	380	794	355	463	1659	742	101	1383	619
v/s Ratio Prot	c0.10	c0.16		c0.14	0.05		c0.07	c0.37		0.00	0.26	
v/s Ratio Perm			0.02			0.00			0.11			0.07
v/c Ratio	0.75	1.12	0.17	0.66	0.22	0.02	0.56	0.78	0.24	0.04	0.67	0.17
Uniform Delay, d1	43.2	44.5	39.0	37.3	32.8	31.4	42.0	23.1	16.5	46.3	26.1	20.7
Progression Factor	1.00	1.00	1.00	1.00	1.00	1.00	1.00	1.00	1.00	1.00	1.00	1.00
Incremental Delay, d2	6.5	89.4	0.4	4.3	0.1	0.0	1.4	2.4	0.2	0.2	1.2	0.1
Delay (s)	49.7	133.9	39.4	41.6	33.0	31.4	43.5	25.5	16.7	46.5	27.3	20.8
Level of Service	D	F	D	D	C	C	D	C	B	D	C	C
Approach Delay (s)		74.1			37.6			26.5			25.9	
Approach LOS		E			D			C			C	

Intersection Summary			
HCM Average Control Delay	37.3	HCM Level of Service	D
HCM Volume to Capacity ratio	0.80		
Actuated Cycle Length (s)	103.9	Sum of lost time (s)	12.0
Intersection Capacity Utilization	83.8%	ICU Level of Service	E
Analysis Period (min)	15		

c Critical Lane Group

Movement	EBL	EBR	NBL	NBT	SBT	SBR
Lane Configurations						
Ideal Flow (vphpl)	1900	1900	1900	1900	1900	1900
Total Lost time (s)	3.0	3.0	3.0	3.0	3.0	3.0
Lane Util. Factor	1.00	1.00	1.00	0.95	0.95	1.00
Frt	1.00	0.85	1.00	1.00	1.00	0.85
Flt Protected	0.95	1.00	0.95	1.00	1.00	1.00
Satd. Flow (prot)	1770	1583	1770	3539	3539	1583
Flt Permitted	0.95	1.00	0.09	1.00	1.00	1.00
Satd. Flow (perm)	1770	1583	176	3539	3539	1583
Volume (vph)	211	183	249	1516	1150	116
Peak-hour factor, PHF	0.95	0.95	0.95	0.95	0.95	0.95
Adj. Flow (vph)	222	193	262	1596	1211	122
RTOR Reduction (vph)	0	148	0	0	0	37
Lane Group Flow (vph)	222	45	262	1596	1211	85
Turn Type		Perm	pm+pt			pm+ov
Protected Phases	4		1	6	2	4
Permitted Phases		4	6			2
Actuated Green, G (s)	16.4	16.4	58.1	58.1	37.2	53.6
Effective Green, g (s)	20.4	20.4	61.6	61.6	40.7	61.1
Actuated g/C Ratio	0.23	0.23	0.70	0.70	0.46	0.69
Clearance Time (s)	7.0	7.0	7.0	6.5	6.5	7.0
Vehicle Extension (s)	3.0	3.0	4.0	4.0	4.0	3.0
Lane Grp Cap (vph)	410	367	447	2477	1637	1153
v/s Ratio Prot	c0.13		0.12	c0.45	c0.34	0.02
v/s Ratio Perm		0.03	0.29			0.04
v/c Ratio	0.54	0.12	0.59	0.64	0.74	0.07
Uniform Delay, d1	29.7	26.7	17.8	7.2	19.3	4.3
Progression Factor	1.00	1.00	1.00	1.00	1.00	1.00
Incremental Delay, d2	1.5	0.1	2.3	0.7	1.9	0.0
Delay (s)	31.2	26.9	20.1	7.9	21.2	4.4
Level of Service	C	C	C	A	C	A
Approach Delay (s)	29.2			9.6	19.7	
Approach LOS	C			A	B	

Intersection Summary				
HCM Average Control Delay	15.6	HCM Level of Service		B
HCM Volume to Capacity ratio	0.67			
Actuated Cycle Length (s)	88.0	Sum of lost time (s)		9.0
Intersection Capacity Utilization	67.3%	ICU Level of Service		C
Analysis Period (min)	15			

c Critical Lane Group

Movement	EBL	EBT	EBR	WBL	WBT	WBR	NBL	NBT	NBR	SBL	SBT	SBR
Lane Configurations												
Ideal Flow (vphpl)	1900	1900	1900	1900	1900	1900	1900	1900	1900	1900	1900	1900
Total Lost time (s)	3.0	3.0	3.0	3.0	3.0	3.0	3.0	3.0	3.0	3.0	3.0	3.0
Lane Util. Factor	1.00	0.91	1.00	1.00	0.91	1.00	1.00	0.95	1.00	0.97	0.95	1.00
Frt	1.00	1.00	0.85	1.00	1.00	0.85	1.00	1.00	0.85	1.00	1.00	0.85
Flt Protected	0.95	1.00	1.00	0.95	1.00	1.00	0.95	1.00	1.00	0.95	1.00	1.00
Satd. Flow (prot)	1770	5085	1583	1770	5085	1583	1770	3539	1583	3433	3539	1583
Flt Permitted	0.95	1.00	1.00	0.95	1.00	1.00	0.95	1.00	1.00	0.95	1.00	1.00
Satd. Flow (perm)	1770	5085	1583	1770	5085	1583	1770	3539	1583	3433	3539	1583
Volume (vph)	226	640	194	216	1580	1098	127	549	106	607	394	156
Peak-hour factor, PHF	0.95	0.95	0.95	0.95	0.95	0.95	0.95	0.95	0.95	0.95	0.95	0.95
Adj. Flow (vph)	238	674	204	227	1663	1156	134	578	112	639	415	164
RTOR Reduction (vph)	0	0	0	0	0	0	0	0	48	0	0	61
Lane Group Flow (vph)	238	674	204	227	1663	1156	134	578	64	639	415	103
Turn Type	Prot		Free	Prot		Free	Prot		pm+ov	Prot		pm+ov
Protected Phases	1	6		5	2		3	8	5	7	4	1
Permitted Phases			Free			Free			8			4
Actuated Green, G (s)	16.8	46.0	135.0	14.3	43.5	135.0	13.9	24.7	39.0	22.5	33.3	50.1
Effective Green, g (s)	20.8	50.0	135.0	18.3	47.5	135.0	17.9	28.2	46.5	26.5	36.8	57.6
Actuated g/C Ratio	0.15	0.37	1.00	0.14	0.35	1.00	0.13	0.21	0.34	0.20	0.27	0.43
Clearance Time (s)	7.0	7.0		7.0	7.0		7.0	6.5	7.0	7.0	6.5	7.0
Vehicle Extension (s)	2.0	3.0		2.0	3.0		2.0	2.0	2.0	2.0	2.0	2.0
Lane Grp Cap (vph)	273	1883	1583	240	1789	1583	235	739	580	674	965	711
v/s Ratio Prot	0.13	0.13		c0.13	c0.33		0.08	0.16	0.01	c0.19	0.12	0.02
v/s Ratio Perm			0.13			c0.73			0.03			0.04
v/c Ratio	0.87	0.36	0.13	0.95	0.93	0.73	0.57	0.78	0.11	0.95	0.43	0.14
Uniform Delay, d1	55.8	30.8	0.0	57.9	42.1	0.0	54.9	50.5	30.2	53.6	40.5	23.6
Progression Factor	1.00	1.00	1.00	1.00	1.00	1.00	1.00	1.00	1.00	1.00	1.00	1.00
Incremental Delay, d2	24.2	0.5	0.2	42.5	10.1	3.0	2.1	5.0	0.0	22.3	0.1	0.0
Delay (s)	80.0	31.4	0.2	100.4	52.2	3.0	57.0	55.5	30.2	75.8	40.6	23.7
Level of Service	E	C	A	F	D	A	E	E	C	E	D	C
Approach Delay (s)		36.0			37.1			52.3			56.8	
Approach LOS		D			D			D			E	

Intersection Summary				
HCM Average Control Delay	42.8	HCM Level of Service		D
HCM Volume to Capacity ratio	0.88			
Actuated Cycle Length (s)	135.0	Sum of lost time (s)		9.0
Intersection Capacity Utilization	88.9%	ICU Level of Service		E
Analysis Period (min)	15			

c Critical Lane Group

Movement	EBL	EBT	EBR	WBL	WBT	WBR	NBL	NBT	NBR	SBL	SBT	SBR
Lane Configurations												
Ideal Flow (vphpl)	1900	1900	1900	1900	1900	1900	1900	1900	1900	1900	1900	1900
Total Lost time (s)	3.0	3.0	3.0	3.0	3.0	3.0	3.0	3.0	3.0	3.0	3.0	
Lane Util. Factor	1.00	0.91	1.00	1.00	0.91	1.00	1.00	0.95	1.00	1.00	0.95	
Frt	1.00	1.00	0.85	1.00	1.00	0.85	1.00	1.00	0.85	1.00	0.92	
Flt Protected	0.95	1.00	1.00	0.95	1.00	1.00	0.95	1.00	1.00	0.95	1.00	
Satd. Flow (prot)	1770	5085	1583	1770	5085	1583	1770	3539	1583	1770	3241	
Flt Permitted	0.95	1.00	1.00	0.95	1.00	1.00	0.66	1.00	1.00	0.54	1.00	
Satd. Flow (perm)	1770	5085	1583	1770	5085	1583	1237	3539	1583	1013	3241	
Volume (vph)	17	1290	45	390	2329	146	130	32	415	194	58	74
Peak-hour factor, PHF	0.95	0.95	0.95	0.95	0.95	0.95	0.95	0.95	0.95	0.95	0.95	0.95
Adj. Flow (vph)	18	1358	47	411	2452	154	137	34	437	204	61	78
RTOR Reduction (vph)	0	0	23	0	0	30	0	0	0	0	68	0
Lane Group Flow (vph)	18	1358	24	411	2452	124	137	34	437	204	71	0
Turn Type	Prot		pm+ov	Prot		pm+ov	pm+pt		Free	pm+pt		
Protected Phases	1	6	3	5	2	7	3	8		7	4	
Permitted Phases			6			2	8		Free	4		
Actuated Green, G (s)	2.8	50.4	62.7	35.5	83.1	105.1	17.4	5.1	140.0	34.1	14.8	
Effective Green, g (s)	6.8	53.9	70.2	39.5	86.6	112.6	24.9	8.6	140.0	37.6	18.3	
Actuated g/C Ratio	0.05	0.38	0.50	0.28	0.62	0.80	0.18	0.06	1.00	0.27	0.13	
Clearance Time (s)	7.0	6.5	7.0	7.0	6.5	7.0	7.0	6.5		7.0	6.5	
Vehicle Extension (s)	2.0	3.0	2.0	2.0	3.0	2.0	2.0	2.0		2.0	2.0	
Lane Grp Cap (vph)	86	1958	828	499	3145	1307	282	217	1583	413	424	
v/s Ratio Prot	0.01	0.27	0.00	c0.23	c0.48	0.02	0.06	0.01		c0.09	0.02	
v/s Ratio Perm			0.01			0.06	0.03		0.28	c0.04		
v/c Ratio	0.21	0.69	0.03	0.82	0.78	0.09	0.49	0.16	0.28	0.49	0.17	
Uniform Delay, d1	64.0	36.1	17.7	47.0	19.7	2.9	51.3	62.3	0.0	42.4	54.1	
Progression Factor	1.00	1.00	1.00	1.00	1.00	1.00	1.00	1.00	1.00	1.00	1.00	
Incremental Delay, d2	0.4	2.1	0.0	10.1	2.0	0.0	0.5	0.1	0.4	0.3	0.9	
Delay (s)	64.5	38.2	17.7	57.1	21.7	2.9	51.8	62.4	0.4	42.7	54.9	
Level of Service	E	D	B	E	C	A	D	E	A	D	D	
Approach Delay (s)		37.8			25.5			15.5			47.7	
Approach LOS		D			C			B			D	

Intersection Summary			
HCM Average Control Delay	29.0	HCM Level of Service	C
HCM Volume to Capacity ratio	0.71		
Actuated Cycle Length (s)	140.0	Sum of lost time (s)	6.0
Intersection Capacity Utilization	80.7%	ICU Level of Service	D
Analysis Period (min)	15		

c Critical Lane Group

Movement	EBL	EBT	EBR	WBL	WBT	WBR	NBL	NBT	NBR	SBL	SBT	SBR
Lane Configurations												
Ideal Flow (vphpl)	1900	1900	1900	1900	1900	1900	1900	1900	1900	1900	1900	1900
Total Lost time (s)	3.0	3.0	3.0	3.0	3.0	3.0	3.0	3.0	3.0	3.0	3.0	3.0
Lane Util. Factor	0.97	0.91	1.00	0.97	0.91	1.00	1.00	0.95	1.00	0.97	0.95	1.00
Frt	1.00	1.00	0.85	1.00	1.00	0.85	1.00	1.00	0.85	1.00	1.00	0.85
Flt Protected	0.95	1.00	1.00	0.95	1.00	1.00	0.95	1.00	1.00	0.95	1.00	1.00
Satd. Flow (prot)	3433	5085	1583	3433	5085	1583	1770	3539	1583	3433	3539	1583
Flt Permitted	0.95	1.00	1.00	0.95	1.00	1.00	0.95	1.00	1.00	0.95	1.00	1.00
Satd. Flow (perm)	3433	5085	1583	3433	5085	1583	1770	3539	1583	3433	3539	1583
Volume (vph)	142	1418	179	1197	2925	918	137	395	672	687	501	345
Peak-hour factor, PHF	0.95	0.95	0.95	0.95	0.95	0.95	0.95	0.95	0.95	0.95	0.95	0.95
Adj. Flow (vph)	149	1493	188	1260	3079	966	144	416	707	723	527	363
RTOR Reduction (vph)	0	0	4	0	0	0	0	0	0	0	0	0
Lane Group Flow (vph)	149	1493	184	1260	3079	966	144	416	707	723	527	363
Turn Type	Prot		pm+ov	Prot		Free	Split		Free	Split		Free
Protected Phases	5	2	4	1	6		4	4		3	3	
Permitted Phases			2			Free			Free			Free
Actuated Green, G (s)	7.0	38.5	49.2	42.0	73.5	130.0	10.7	10.7	130.0	9.8	9.8	130.0
Effective Green, g (s)	11.0	43.0	58.2	46.0	78.0	130.0	15.2	15.2	130.0	13.8	13.8	130.0
Actuated g/C Ratio	0.08	0.33	0.45	0.35	0.60	1.00	0.12	0.12	1.00	0.11	0.11	1.00
Clearance Time (s)	7.0	7.5	7.5	7.0	7.5		7.5	7.5		7.0	7.0	
Vehicle Extension (s)	3.0	4.0	3.0	3.0	4.0		3.0	3.0		3.0	3.0	
Lane Grp Cap (vph)	290	1682	709	1215	3051	1583	207	414	1583	364	376	1583
v/s Ratio Prot	0.04	0.29	0.03	c0.37	c0.61		0.08	c0.12		c0.21	0.15	
v/s Ratio Perm			0.09			0.61			0.45			0.23
v/c Ratio	0.51	0.89	0.26	1.04	1.01	0.61	0.70	1.00	0.45	1.99	1.40	0.23
Uniform Delay, d1	56.9	41.2	22.4	42.0	26.0	0.0	55.2	57.4	0.0	58.1	58.1	0.0
Progression Factor	1.00	1.00	1.00	1.00	1.00	1.00	1.00	1.00	1.00	1.00	1.00	1.00
Incremental Delay, d2	1.5	7.4	0.2	35.9	18.6	1.8	9.7	45.4	0.9	453.6	196.1	0.3
Delay (s)	58.5	48.6	22.6	77.9	44.6	1.8	64.9	102.8	0.9	511.7	254.2	0.3
Level of Service	E	D	C	E	D	A	E	F	A	F	F	A
Approach Delay (s)		46.7			44.7			41.7			312.5	
Approach LOS		D			D			D			F	

Intersection Summary			
HCM Average Control Delay	87.8	HCM Level of Service	F
HCM Volume to Capacity ratio	1.13		
Actuated Cycle Length (s)	130.0	Sum of lost time (s)	9.0
Intersection Capacity Utilization	106.2%	ICU Level of Service	G
Analysis Period (min)	15		

c Critical Lane Group

Movement	EBL	EBT	EBR	WBL	WBT	WBR	NBL	NBT	NBR	SBL	SBT	SBR
Lane Configurations												
Ideal Flow (vphpl)	1900	1900	1900	1900	1900	1900	1900	1900	1900	1900	1900	1900
Total Lost time (s)	3.0	3.0	3.0	3.0	3.0	3.0	3.0	3.0	3.0	3.0	3.0	3.0
Lane Util. Factor	0.97	0.86	1.00	0.97	0.86	1.00	0.91	0.86	0.91	0.91	0.91	1.00
Frt	1.00	1.00	0.85	1.00	1.00	0.85	1.00	1.00	0.85	1.00	1.00	0.85
Flt Protected	0.95	1.00	1.00	0.95	1.00	1.00	0.95	0.96	1.00	0.95	0.96	1.00
Satd. Flow (prot)	3433	6408	1583	3433	6408	1583	1610	3079	1441	1610	3248	1583
Flt Permitted	0.95	1.00	1.00	0.95	1.00	1.00	0.95	0.96	1.00	0.95	0.96	1.00
Satd. Flow (perm)	3433	6408	1583	3433	6408	1583	1610	3079	1441	1610	3248	1583
Volume (vph)	169	2265	94	72	3919	337	343	40	680	304	22	272
Peak-hour factor, PHF	0.95	0.95	0.95	0.95	0.95	0.95	0.95	0.95	0.95	0.95	0.95	0.95
Adj. Flow (vph)	178	2384	99	76	4125	355	361	42	716	320	23	286
RTOR Reduction (vph)	0	0	39	0	0	0	0	0	0	0	0	0
Lane Group Flow (vph)	178	2384	60	76	4125	355	181	222	716	160	183	286
Turn Type	Prot		Perm	Prot		Free	Split		Free	Split		Free
Protected Phases	1	6		5	2		4	4		3	3	
Permitted Phases			6			Free			Free			Free
Actuated Green, G (s)	5.0	84.0	84.0	5.0	84.0	145.0	15.0	15.0	145.0	13.0	13.0	145.0
Effective Green, g (s)	9.0	88.0	88.0	9.0	88.0	145.0	19.0	19.0	145.0	17.0	17.0	145.0
Actuated g/C Ratio	0.06	0.61	0.61	0.06	0.61	1.00	0.13	0.13	1.00	0.12	0.12	1.00
Clearance Time (s)	7.0	7.0	7.0	7.0	7.0		7.0	7.0		7.0	7.0	
Vehicle Extension (s)	2.0	3.0	3.0	2.0	3.0		3.0	3.0		3.0	3.0	
Lane Grp Cap (vph)	213	3889	961	213	3889	1583	211	403	1441	189	381	1583
v/s Ratio Prot	c0.05	0.37		0.02	c0.64		c0.11	0.07		c0.10	0.06	
v/s Ratio Perm			0.04			0.22			0.50			0.18
v/c Ratio	0.84	0.61	0.06	0.36	1.06	0.22	0.86	0.85dl	0.50	0.85	0.48	0.18
Uniform Delay, d1	67.3	17.8	11.6	65.2	28.5	0.0	61.7	59.0	0.0	62.7	59.9	0.0
Progression Factor	1.00	1.00	1.00	1.00	1.00	1.00	1.00	1.00	1.00	1.00	1.00	1.00
Incremental Delay, d2	22.8	0.7	0.1	0.4	33.8	0.3	27.4	1.6	1.2	27.9	1.0	0.3
Delay (s)	90.1	18.6	11.8	65.6	62.3	0.3	89.1	60.6	1.2	90.6	60.8	0.3
Level of Service	F	B	B	E	E	A	F	E	A	F	E	A
Approach Delay (s)		23.1			57.6			27.2			40.9	
Approach LOS		C			E			C			D	

Intersection Summary			
HCM Average Control Delay	42.4	HCM Level of Service	D
HCM Volume to Capacity ratio	0.99		
Actuated Cycle Length (s)	145.0	Sum of lost time (s)	12.0
Intersection Capacity Utilization	95.6%	ICU Level of Service	F
Analysis Period (min)	15		

dl Defacto Left Lane. Recode with 1 though lane as a left lane.
c Critical Lane Group

Movement	EBL	EBT	EBR	WBL	WBT	WBR	NBL	NBT	NBR	SBL	SBT	SBR
Lane Configurations												
Ideal Flow (vphpl)	1900	1900	1900	1900	1900	1900	1900	1900	1900	1900	1900	1900
Total Lost time (s)		3.0		3.0	3.0			3.0	3.0		3.0	
Lane Util. Factor		0.95		1.00	0.95			1.00	1.00		1.00	
Frt		0.99		1.00	1.00			1.00	0.85		0.94	
Flt Protected		1.00		0.95	1.00			0.95	1.00		0.98	
Satd. Flow (prot)		3498		1770	3539			1775	1583		1724	
Flt Permitted		0.92		0.07	1.00			0.95	1.00		0.98	
Satd. Flow (perm)		3233		123	3539			1775	1583		1724	
Volume (vph)	25	1577	125	165	1010	0	180	2	262	7	3	7
Peak-hour factor, PHF	0.95	0.95	0.95	0.95	0.95	0.95	0.95	0.95	0.95	0.95	0.95	0.95
Adj. Flow (vph)	26	1660	132	174	1063	0	189	2	276	7	3	7
RTOR Reduction (vph)	0	4	0	0	0	0	0	0	0	0	7	0
Lane Group Flow (vph)	0	1814	0	174	1063	0	0	191	276	0	10	0
Turn Type	Perm			pm+pt			Split		pm+ov	Split		
Protected Phases		6		5	2		4	4	5	8	8	
Permitted Phases	6			2					4			
Actuated Green, G (s)		54.7		68.8	68.8			15.7	24.3		2.7	
Effective Green, g (s)		57.7		71.8	71.8			18.7	29.8		5.7	
Actuated g/C Ratio		0.55		0.68	0.68			0.18	0.28		0.05	
Clearance Time (s)		6.0		5.5	6.0			6.0	5.5		6.0	
Vehicle Extension (s)		4.0		2.0	4.0			3.0	2.0		3.0	
Lane Grp Cap (vph)		1773		258	2415			316	448		93	
v/s Ratio Prot				c0.07	0.30			0.11	c0.06		c0.01	
v/s Ratio Perm		c0.56		0.39					0.11			
v/c Ratio		1.02		0.67	0.44			0.60	0.62		0.11	
Uniform Delay, d1		23.8		28.5	7.6			39.8	32.7		47.3	
Progression Factor		1.00		1.00	1.00			1.00	1.00		1.00	
Incremental Delay, d2		27.5		5.4	0.2			3.2	1.8		0.5	
Delay (s)		51.3		33.9	7.8			43.1	34.5		47.9	
Level of Service		D		C	A			D	C		D	
Approach Delay (s)		51.3			11.4			38.0			47.9	
Approach LOS		D			B			D			D	

Intersection Summary			
HCM Average Control Delay	35.6	HCM Level of Service	D
HCM Volume to Capacity ratio	0.84		
Actuated Cycle Length (s)	105.2	Sum of lost time (s)	12.0
Intersection Capacity Utilization	103.0%	ICU Level of Service	G
Analysis Period (min)	15		

c Critical Lane Group

Movement	EBL	EBT	WBT	WBR	SBL	SBR
Lane Configurations						
Ideal Flow (vphpl)	1900	1900	1900	1900	1900	1900
Total Lost time (s)	3.0	3.0	3.0	3.0	3.0	3.0
Lane Util. Factor	0.97	0.95	0.91	0.91	0.97	1.00
Frt	1.00	1.00	0.96	0.85	1.00	0.85
Flt Protected	0.95	1.00	1.00	1.00	0.95	1.00
Satd. Flow (prot)	3433	3539	3246	1441	3433	1583
Flt Permitted	0.95	1.00	1.00	1.00	0.95	1.00
Satd. Flow (perm)	3433	3539	3246	1441	3433	1583
Volume (vph)	1088	524	520	751	623	718
Peak-hour factor, PHF	0.95	0.95	0.95	0.95	0.95	0.95
Adj. Flow (vph)	1145	552	547	791	656	756
RTOR Reduction (vph)	0	0	29	1	0	366
Lane Group Flow (vph)	1145	552	734	574	656	390
Turn Type	Prot			pm+ov		Perm
Protected Phases	5	2	6	4	4	
Permitted Phases				6		4
Actuated Green, G (s)	35.6	75.9	33.3	67.2	33.9	33.9
Effective Green, g (s)	39.6	79.9	37.3	75.7	38.4	38.4
Actuated g/C Ratio	0.32	0.64	0.30	0.61	0.31	0.31
Clearance Time (s)	7.0	7.0	7.0	7.5	7.5	7.5
Vehicle Extension (s)	2.0	3.0	3.0	3.0	3.0	3.0
Lane Grp Cap (vph)	1094	2275	974	912	1061	489
v/s Ratio Prot	c0.33	0.16	c0.23	0.19	0.19	
v/s Ratio Perm				0.20		c0.25
v/c Ratio	1.05	0.24	0.75	0.63	0.62	0.80
Uniform Delay, d1	42.3	9.4	39.3	15.4	36.7	39.4
Progression Factor	1.00	1.00	1.00	1.00	1.00	1.00
Incremental Delay, d2	40.2	0.1	3.4	1.4	1.1	8.8
Delay (s)	82.6	9.5	42.7	16.8	37.8	48.2
Level of Service	F	A	D	B	D	D
Approach Delay (s)		58.8	31.6		43.3	
Approach LOS		E	C		D	

Intersection Summary				
HCM Average Control Delay	45.7	HCM Level of Service	D
HCM Volume to Capacity ratio	0.87		
Actuated Cycle Length (s)	124.3	Sum of lost time (s)	9.0
Intersection Capacity Utilization	81.2%	ICU Level of Service	D
Analysis Period (min)	15		
c Critical Lane Group			

Movement	EBL	EBT	EBR	WBL	WBT	WBR	NBL	NBT	NBR	SBL	SBT	SBR
Lane Configurations												
Sign Control		Stop			Stop			Free			Free	
Grade		0%			0%			0%			0%	
Volume (veh/h)	226	0	181	56	0	168	139	1230	12	35	868	147
Peak Hour Factor	0.95	0.95	0.95	0.95	0.95	0.95	0.95	0.95	0.95	0.95	0.95	0.95
Hourly flow rate (vph)	238	0	191	59	0	177	146	1295	13	37	914	155
Pedestrians												
Lane Width (ft)												
Walking Speed (ft/s)												
Percent Blockage												
Right turn flare (veh)												
Median type		None			None							
Median storage veh)												
Upstream signal (ft)											940	
pX, platoon unblocked												
vC, conflicting volume	2104	2587	457	2308	2729	647	1068			1307		
vC1, stage 1 conf vol												
vC2, stage 2 conf vol												
vCu, unblocked vol	2104	2587	457	2308	2729	647	1068			1307		
tC, single (s)	7.5	6.5	6.9	7.5	6.5	6.9	4.1			4.1		
tC, 2 stage (s)												
tF (s)	3.5	4.0	3.3	3.5	4.0	3.3	2.2			2.2		
p0 queue free %	0	100	65	0	100	57	77			93		
cM capacity (veh/h)	13	18	551	11	14	413	648			525		

Direction, Lane #	EB 1	EB 2	WB 1	WB 2	WB 3	NB 1	NB 2	NB 3	NB 4	SB 1	SB 2	SB 3
Volume Total	238	191	59	0	177	146	647	647	13	37	457	457
Volume Left	238	0	59	0	0	146	0	0	0	37	0	0
Volume Right	0	191	0	0	177	0	0	0	13	0	0	0
cSH	13	551	11	1700	413	648	1700	1700	1700	525	1700	1700
Volume to Capacity	18.04	0.35	5.61	0.00	0.43	0.23	0.38	0.38	0.01	0.07	0.27	0.27
Queue Length 95th (ft)	Err	38	Err	0	52	22	0	0	0	6	0	0
Control Delay (s)	Err	15.0	Err	0.0	20.1	12.2	0.0	0.0	0.0	12.4	0.0	0.0
Lane LOS	F	B	F	A	C	B				B		
Approach Delay (s)	5558.9		2514.8			1.2				0.4		
Approach LOS	F		F									

Intersection Summary					
Average Delay	923.6				
Intersection Capacity Utilization	66.9%	ICU Level of Service		C	
Analysis Period (min)	15				

Movement	EBL	EBT	WBT	WBR	SWL	SWR
Lane Configurations		↑↑	↑↑			↱↱
Sign Control		Free	Free		Stop	
Grade		0%	0%		0%	
Volume (veh/h)	0	1012	47	0	0	10
Peak Hour Factor	0.92	0.92	0.92	0.92	0.92	0.92
Hourly flow rate (vph)	0	1100	51	0	0	11
Pedestrians						
Lane Width (ft)						
Walking Speed (ft/s)						
Percent Blockage						
Right turn flare (veh)						
Median type					None	
Median storage veh)						
Upstream signal (ft)						
pX, platoon unblocked						
vC, conflicting volume	51				601	26
vC1, stage 1 conf vol						
vC2, stage 2 conf vol						
vCu, unblocked vol	51				601	26
tC, single (s)	4.1				6.8	6.9
tC, 2 stage (s)						
tF (s)	2.2				3.5	3.3
p0 queue free %	100				100	99
cM capacity (veh/h)	1553				432	1044

Direction, Lane #	EB 1	EB 2	WB 1	WB 2	SW 1	SW 2
Volume Total	550	550	26	26	5	5
Volume Left	0	0	0	0	0	0
Volume Right	0	0	0	0	5	5
cSH	1700	1700	1700	1700	1044	1044
Volume to Capacity	0.32	0.32	0.02	0.02	0.01	0.01
Queue Length 95th (ft)	0	0	0	0	0	0
Control Delay (s)	0.0	0.0	0.0	0.0	8.5	8.5
Lane LOS					A	A
Approach Delay (s)	0.0		0.0		8.5	
Approach LOS					A	

Intersection Summary			
Average Delay	0.1		
Intersection Capacity Utilization	31.3%	ICU Level of Service	A
Analysis Period (min)	15		

HCM Unsignalized Intersection Capacity Analysis
11: Smith Switch Road & Loudoun County Parkway

Kincora
Future Background 2011

Movement	EBL	EBR	NBL	NBT	SBT	SBR
Lane Configurations						
Sign Control	Stop			Free	Free	
Grade	0%			0%	0%	
Volume (veh/h)	9	5	11	591	527	4
Peak Hour Factor	0.95	0.95	0.95	0.95	0.95	0.95
Hourly flow rate (vph)	9	5	12	622	555	4
Pedestrians						
Lane Width (ft)						
Walking Speed (ft/s)						
Percent Blockage						
Right turn flare (veh)						
Median type	None					
Median storage veh)						
Upstream signal (ft)						
pX, platoon unblocked						
vC, conflicting volume	1202	557	559			
vC1, stage 1 conf vol						
vC2, stage 2 conf vol						
vCu, unblocked vol	1202	557	559			
tC, single (s)	6.4	6.2	4.1			
tC, 2 stage (s)						
tF (s)	3.5	3.3	2.2			
p0 queue free %	95	99	99			
cM capacity (veh/h)	202	530	1012			

Direction, Lane #	EB 1	NB 1	SB 1
Volume Total	15	634	559
Volume Left	9	12	0
Volume Right	5	0	4
cSH	259	1012	1700
Volume to Capacity	0.06	0.01	0.33
Queue Length 95th (ft)	5	1	0
Control Delay (s)	19.7	0.3	0.0
Lane LOS	C	A	
Approach Delay (s)	19.7	0.3	0.0
Approach LOS	C		

Intersection Summary				
Average Delay		0.4		
Intersection Capacity Utilization		49.9%	ICU Level of Service	A
Analysis Period (min)		15		

HCM Signalized Intersection Capacity Analysis
20: Waxpool Road & Loudoun County Parkway

Kincora
Future Background 2011

Movement	EBL	EBT	EBR	WBL	WBT	WBR	NBL	NBT	NBR	SBL	SBT	SBR
Lane Configurations												
Ideal Flow (vphpl)	1900	1900	1900	1900	1900	1900	1900	1900	1900	1900	1900	1900
Total Lost time (s)	3.0	3.0	3.0	3.0	3.0	3.0	3.0	3.0	3.0	3.0	3.0	3.0
Lane Util. Factor	0.97	0.91	1.00	0.97	0.91	1.00	1.00	0.95	1.00	0.97	0.95	1.00
Frt	1.00	1.00	0.85	1.00	1.00	0.85	1.00	1.00	0.85	1.00	1.00	0.85
Flt Protected	0.95	1.00	1.00	0.95	1.00	1.00	0.95	1.00	1.00	0.95	1.00	1.00
Satd. Flow (prot)	3433	5085	1583	3433	5085	1583	1770	3539	1583	3433	3539	1583
Flt Permitted	0.95	1.00	1.00	0.95	1.00	1.00	0.95	1.00	1.00	0.95	1.00	1.00
Satd. Flow (perm)	3433	5085	1583	3433	5085	1583	1770	3539	1583	3433	3539	1583
Volume (vph)	69	859	27	321	760	474	28	226	298	406	218	59
Peak-hour factor, PHF	0.95	0.95	0.95	0.95	0.95	0.95	0.95	0.95	0.95	0.95	0.95	0.95
Adj. Flow (vph)	73	904	28	338	800	499	29	238	314	427	229	62
RTOR Reduction (vph)	0	0	11	0	0	0	0	0	0	0	0	0
Lane Group Flow (vph)	73	904	17	338	800	499	29	238	314	427	229	62
Turn Type	Prot		pm+ov	Prot		Free	Split		Free	Split		Free
Protected Phases	5	2	4	1	6		4	4		3	3	
Permitted Phases			2			Free			Free			Free
Actuated Green, G (s)	5.6	57.8	68.4	16.9	69.1	130.0	10.6	10.6	130.0	15.7	15.7	130.0
Effective Green, g (s)	9.6	62.3	77.4	20.9	73.6	130.0	15.1	15.1	130.0	19.7	19.7	130.0
Actuated g/C Ratio	0.07	0.48	0.60	0.16	0.57	1.00	0.12	0.12	1.00	0.15	0.15	1.00
Clearance Time (s)	7.0	7.5	7.5	7.0	7.5		7.5	7.5		7.0	7.0	
Vehicle Extension (s)	3.0	4.0	3.0	3.0	4.0		3.0	3.0		3.0	3.0	
Lane Grp Cap (vph)	254	2437	942	552	2879	1583	206	411	1583	520	536	1583
v/s Ratio Prot	0.02	c0.18	0.00	c0.10	0.16		0.02	c0.07		c0.12	0.06	
v/s Ratio Perm			0.01			0.32			0.20			0.04
v/c Ratio	0.29	0.37	0.02	0.61	0.28	0.32	0.14	0.58	0.20	0.82	0.43	0.04
Uniform Delay, d1	57.0	21.4	10.8	50.8	14.5	0.0	51.6	54.4	0.0	53.4	50.0	0.0
Progression Factor	1.00	1.00	1.00	1.00	1.00	1.00	1.00	1.00	1.00	1.00	1.00	1.00
Incremental Delay, d2	0.6	0.4	0.0	2.0	0.2	0.5	0.3	2.0	0.3	10.1	0.5	0.0
Delay (s)	57.6	21.9	10.8	52.8	14.8	0.5	51.9	56.4	0.3	63.5	50.6	0.0
Level of Service	E	C	B	D	B	A	D	E	A	E	D	A
Approach Delay (s)		24.2			18.3			25.9			53.9	
Approach LOS		C			B			C			D	

Intersection Summary				
HCM Average Control Delay	27.4	HCM Level of Service	C	
HCM Volume to Capacity ratio	0.52			
Actuated Cycle Length (s)	130.0	Sum of lost time (s)	12.0	
Intersection Capacity Utilization	56.9%	ICU Level of Service	B	
Analysis Period (min)	15			
c Critical Lane Group				

Movement	EBL	EBT	EBR	WBL	WBT	WBR	NBL	NBT	NBR	SBL	SBT	SBR
Lane Configurations												
Ideal Flow (vphpl)	1900	1900	1900	1900	1900	1900	1900	1900	1900	1900	1900	1900
Total Lost time (s)	3.0	3.0	3.0	3.0	3.0	3.0	3.0	3.0	3.0	3.0	3.0	3.0
Lane Util. Factor	0.97	0.86	1.00	0.97	0.86	1.00	0.91	0.86	0.91	0.91	0.91	1.00
Frt	1.00	1.00	0.85	1.00	1.00	0.85	1.00	1.00	0.85	1.00	1.00	0.85
Flt Protected	0.95	1.00	1.00	0.95	1.00	1.00	0.95	0.99	1.00	0.95	0.96	1.00
Satd. Flow (prot)	3433	6408	1583	3433	6408	1583	1610	3165	1441	1610	3245	1583
Flt Permitted	0.95	1.00	1.00	0.95	1.00	1.00	0.95	0.99	1.00	0.95	0.96	1.00
Satd. Flow (perm)	3433	6408	1583	3433	6408	1583	1610	3165	1441	1610	3245	1583
Volume (vph)	451	1708	40	20	1358	847	48	49	42	673	41	601
Peak-hour factor, PHF	0.95	0.95	0.95	0.95	0.95	0.95	0.95	0.95	0.95	0.95	0.95	0.95
Adj. Flow (vph)	475	1798	42	21	1429	892	51	52	44	708	43	633
RTOR Reduction (vph)	0	0	19	0	0	0	0	0	0	0	0	0
Lane Group Flow (vph)	475	1798	23	21	1429	892	34	69	44	354	397	633
Turn Type	Prot		Perm	Prot		Free	Split		Free	Split		Free
Protected Phases	1	6		5	2		4	4		3	3	
Permitted Phases			6			Free			Free			Free
Actuated Green, G (s)	13.9	74.8	74.8	3.6	64.5	145.0	7.5	7.5	145.0	31.1	31.1	145.0
Effective Green, g (s)	17.9	78.8	78.8	7.6	68.5	145.0	11.5	11.5	145.0	35.1	35.1	145.0
Actuated g/C Ratio	0.12	0.54	0.54	0.05	0.47	1.00	0.08	0.08	1.00	0.24	0.24	1.00
Clearance Time (s)	7.0	7.0	7.0	7.0	7.0		7.0	7.0		7.0	7.0	
Vehicle Extension (s)	2.0	3.0	3.0	2.0	3.0		3.0	3.0		3.0	3.0	
Lane Grp Cap (vph)	424	3482	860	180	3027	1583	128	251	1441	390	786	1583
v/s Ratio Prot	c0.14	0.28		0.01	0.22		0.02	0.02		c0.22	0.12	
v/s Ratio Perm			0.01			c0.56			0.03			0.40
v/c Ratio	1.12	0.52	0.03	0.12	0.47	0.56	0.27	0.27	0.03	0.91	0.87dl	0.40
Uniform Delay, d1	63.5	21.0	15.3	65.5	26.0	0.0	62.8	62.8	0.0	53.4	47.4	0.0
Progression Factor	1.00	1.00	1.00	1.00	1.00	1.00	1.00	1.00	1.00	1.00	1.00	1.00
Incremental Delay, d2	80.7	0.6	0.1	0.1	0.5	1.5	1.1	0.6	0.0	24.1	0.5	0.8
Delay (s)	144.2	21.6	15.4	65.6	26.5	1.5	63.9	63.4	0.0	77.5	48.0	0.8
Level of Service	F	C	B	E	C	A	E	E	A	E	D	A
Approach Delay (s)		46.6			17.3			44.6			33.9	
Approach LOS		D			B			D			C	

Intersection Summary

HCM Average Control Delay	32.6	HCM Level of Service	C
HCM Volume to Capacity ratio	0.72		
Actuated Cycle Length (s)	145.0	Sum of lost time (s)	6.0
Intersection Capacity Utilization	67.9%	ICU Level of Service	C
Analysis Period (min)	15		

dl Defacto Left Lane. Recode with 1 though lane as a left lane.
c Critical Lane Group

HCM Signalized Intersection Capacity Analysis
5: Route 7 & Countryside Blvd.

Kincora
Future Background 2011

Movement	EBL	EBT	EBR	WBL	WBT	WBR	NBL	NBT	NBR	SBL	SBT	SBR
Lane Configurations												
Ideal Flow (vphpl)	1900	1900	1900	1900	1900	1900	1900	1900	1900	1900	1900	1900
Total Lost time (s)	3.0	3.0	3.0	3.0	3.0	3.0	3.0	3.0	3.0	3.0	3.0	3.0
Lane Util. Factor	0.97	0.86	1.00	0.97	0.86	1.00	0.97	0.95	1.00	0.97	0.95	1.00
Frt	1.00	1.00	0.85	1.00	1.00	0.85	1.00	1.00	0.85	1.00	1.00	0.85
Flt Protected	0.95	1.00	1.00	0.95	1.00	1.00	0.95	1.00	1.00	0.95	1.00	1.00
Satd. Flow (prot)	3433	6408	1583	3433	6408	1583	3433	3539	1583	3433	3539	1583
Flt Permitted	0.95	1.00	1.00	0.95	1.00	1.00	0.95	1.00	1.00	0.95	1.00	1.00
Satd. Flow (perm)	3433	6408	1583	3433	6408	1583	3433	3539	1583	3433	3539	1583
Volume (vph)	287	2942	99	101	1510	108	74	70	147	165	94	240
Peak-hour factor, PHF	0.95	0.95	0.95	0.95	0.95	0.95	0.95	0.95	0.95	0.95	0.95	0.95
Adj. Flow (vph)	302	3097	104	106	1589	114	78	74	155	174	99	253
RTOR Reduction (vph)	0	0	0	0	0	39	0	0	0	0	0	52
Lane Group Flow (vph)	302	3097	104	106	1589	75	78	74	155	174	99	201
Turn Type	Prot		Free	Prot		pm+ov	Prot		Free	Prot		pm+ov
Protected Phases	1	6		5	2	3	7	4		3	8	1
Permitted Phases			Free			2			Free			8
Actuated Green, G (s)	16.7	86.2	150.0	9.9	79.4	91.4	8.0	13.9	150.0	12.0	17.9	34.6
Effective Green, g (s)	20.7	90.2	150.0	13.9	83.4	99.4	12.0	17.9	150.0	16.0	21.9	42.6
Actuated g/C Ratio	0.14	0.60	1.00	0.09	0.56	0.66	0.08	0.12	1.00	0.11	0.15	0.28
Clearance Time (s)	7.0	7.0		7.0	7.0	7.0	7.0	7.0		7.0	7.0	7.0
Vehicle Extension (s)	2.0	2.0		3.0	2.0	2.0	2.0	2.0		2.0	2.0	2.0
Lane Grp Cap (vph)	474	3853	1583	318	3563	1081	275	422	1583	366	517	481
v/s Ratio Prot	c0.09	c0.48		0.03	0.25	0.01	0.02	0.02		c0.05	0.03	c0.06
v/s Ratio Perm			0.07			0.04			0.10			0.07
v/c Ratio	0.64	0.80	0.07	0.33	0.45	0.07	0.28	0.18	0.10	0.48	0.19	0.42
Uniform Delay, d1	61.1	23.1	0.0	63.7	19.7	8.9	65.0	59.4	0.0	63.1	56.3	43.6
Progression Factor	1.00	1.00	1.00	1.00	1.00	1.00	1.00	1.00	1.00	1.00	1.00	1.00
Incremental Delay, d2	2.1	1.9	0.1	0.6	0.4	0.0	0.2	0.1	0.1	0.4	0.1	0.2
Delay (s)	63.2	24.9	0.1	64.3	20.1	9.0	65.2	59.5	0.1	63.4	56.3	43.8
Level of Service	E	C	A	E	C	A	E	E	A	E	E	D
Approach Delay (s)		27.5			22.0			31.0			52.7	
Approach LOS		C			C			C			D	

Intersection Summary			
HCM Average Control Delay	28.2	HCM Level of Service	C
HCM Volume to Capacity ratio	0.68		
Actuated Cycle Length (s)	150.0	Sum of lost time (s)	6.0
Intersection Capacity Utilization	69.0%	ICU Level of Service	C
Analysis Period (min)	15		

c Critical Lane Group

HCM Signalized Intersection Capacity Analysis
6: Route 7 & Palisade Parkway

Kincora
Future Background 2011

Movement	EBL	EBT	EBR	WBL	WBT	WBR	NBL	NBT	NBR	SBL	SBT	SBR
Lane Configurations												
Ideal Flow (vphpl)	1900	1900	1900	1900	1900	1900	1900	1900	1900	1900	1900	1900
Total Lost time (s)	3.0	3.0	3.0	3.0	3.0	3.0	3.0	3.0	3.0	3.0	3.0	3.0
Lane Util. Factor	0.97	0.86	1.00	1.00	0.88	1.00	0.97	1.00	1.00	0.97	1.00	1.00
Frt	1.00	1.00	0.85	1.00	1.00	0.85	1.00	1.00	0.85	1.00	1.00	0.85
Flt Protected	0.95	1.00	1.00	0.95	1.00	1.00	0.95	1.00	1.00	0.95	1.00	1.00
Satd. Flow (prot)	3433	6408	1583	1770	6408	1583	3433	1863	1583	3433	1863	1583
Flt Permitted	0.95	1.00	1.00	0.95	1.00	1.00	0.95	1.00	1.00	0.95	1.00	1.00
Satd. Flow (perm)	3433	6408	1583	1770	6408	1583	3433	1863	1583	3433	1863	1583
Volume (vph)	162	2671	381	123	1438	73	58	34	42	131	82	208
Peak-hour factor, PHF	0.95	0.95	0.95	0.95	0.95	0.95	0.95	0.95	0.95	0.95	0.95	0.95
Adj. Flow (vph)	171	2812	401	129	1514	77	61	36	44	138	86	219
RTOR Reduction (vph)	0	0	0	0	0	0	0	0	24	0	0	55
Lane Group Flow (vph)	171	2812	401	129	1514	77	61	36	20	138	86	164
Turn Type	Prot		Free	Prot		Free	Split		pm+ov	Split		pm+ov
Protected Phases	1	6		5	2		4	4	5	3	3	1
Permitted Phases			Free			Free			4			3
Actuated Green, G (s)	11.0	77.1	135.0	13.6	79.7	135.0	8.2	6.2	19.8	10.1	10.1	21.1
Effective Green, g (s)	15.0	81.1	135.0	17.6	83.7	135.0	10.2	10.2	27.8	14.1	14.1	29.1
Actuated g/C Ratio	0.11	0.60	1.00	0.13	0.62	1.00	0.08	0.08	0.21	0.10	0.10	0.22
Clearance Time (s)	7.0	7.0		7.0	7.0		7.0	7.0	7.0	7.0	7.0	7.0
Vehicle Extension (s)	2.0	4.0		2.0	4.0		3.0	3.0	2.0	3.0	3.0	2.0
Lane Grp Cap (vph)	381	3850	1583	231	3973	1583	259	141	361	359	195	341
v/s Ratio Prot	0.05	c0.44		c0.07	0.24		0.02	0.02	0.01	0.04	0.05	c0.05
v/s Ratio Perm			c0.25			0.05			0.01			0.05
v/c Ratio	0.45	0.73	0.25	0.56	0.38	0.05	0.24	0.26	0.06	0.38	0.44	0.48
Uniform Delay, d1	56.1	19.2	0.0	55.1	12.8	0.0	58.7	58.8	43.1	56.4	56.8	46.3
Progression Factor	1.00	1.00	1.00	1.00	1.00	1.00	1.00	1.00	1.00	1.00	1.00	1.00
Incremental Delay, d2	0.3	1.3	0.4	1.7	0.3	0.1	0.5	1.0	0.0	0.7	1.6	0.4
Delay (s)	56.4	20.4	0.4	56.7	13.0	0.1	59.2	59.8	43.1	57.1	58.3	46.7
Level of Service	E	C	A	E	B	A	E	E	D	E	E	D
Approach Delay (s)		19.9			15.7			54.3			52.2	
Approach LOS		B			B			D			D	

Intersection Summary			
HCM Average Control Delay	22.0	HCM Level of Service	C
HCM Volume to Capacity ratio	0.62		
Actuated Cycle Length (s)	135.0	Sum of lost time (s)	9.0
Intersection Capacity Utilization	65.9%	ICU Level of Service	C
Analysis Period (min)	15		

c Critical Lane Group

Movement	WBL	WBR	NBT	NBR	SBL	SBT
Lane Configurations						
Ideal Flow (vphpl)	1900	1900	1900	1900	1900	1900
Total Lost time (s)	3.0	3.0	3.0		3.0	3.0
Lane Util. Factor	1.00	1.00	0.95		1.00	0.95
Frt	1.00	0.85	0.97		1.00	1.00
Flt Protected	0.95	1.00	1.00		0.95	1.00
Satd. Flow (prot)	1770	1583	3439		1770	3539
Flt Permitted	0.95	1.00	1.00		0.44	1.00
Satd. Flow (perm)	1770	1583	3439		829	3539
Volume (vph)	89	191	301	70	159	546
Peak-hour factor, PHF	0.95	0.95	0.95	0.95	0.95	0.95
Adj. Flow (vph)	94	201	317	74	167	575
RTOR Reduction (vph)	0	123	17	0	0	0
Lane Group Flow (vph)	94	78	374	0	167	575
Turn Type		prn+ov			pm+pt	
Protected Phases	4	1	2		1	6
Permitted Phases		4			6	
Actuated Green, G (s)	4.9	12.4	18.5		33.0	33.0
Effective Green, g (s)	8.9	20.4	23.0		37.5	37.5
Actuated g/C Ratio	0.17	0.39	0.44		0.72	0.72
Clearance Time (s)	7.0	7.0	7.5		7.0	7.5
Vehicle Extension (s)	2.0	2.0	2.0		2.0	2.0
Lane Grp Cap (vph)	301	707	1509		800	2533
v/s Ratio Prot	c0.05	0.02	0.11		0.05	c0.16
v/s Ratio Perm		0.03			0.10	
v/c Ratio	0.31	0.11	0.25		0.21	0.23
Uniform Delay, d1	19.1	10.2	9.3		2.5	2.5
Progression Factor	1.00	1.00	1.00		1.00	1.00
Incremental Delay, d2	0.2	0.0	0.0		0.0	0.0
Delay (s)	19.3	10.2	9.3		2.6	2.5
Level of Service	B	B	A		A	A
Approach Delay (s)	13.1		9.3			2.5
Approach LOS	B		A			A

Intersection Summary			
HCM Average Control Delay	6.6	HCM Level of Service	A
HCM Volume to Capacity ratio	0.24		
Actuated Cycle Length (s)	52.4	Sum of lost time (s)	6.0
Intersection Capacity Utilization	37.1%	ICU Level of Service	A
Analysis Period (min)	15		

c Critical Lane Group

Movement	EBL	EBT	EBR	WBL	WBT	WBR	NBL	NBT	NBR	SBL	SBT	SBR
Lane Configurations												
Ideal Flow (vphpl)	1900	1900	1900	1900	1900	1900	1900	1900	1900	1900	1900	1900
Total Lost time (s)		4.0	4.0		4.0	4.0	4.0	4.0	4.0	4.0	4.0	4.0
Lane Util. Factor		1.00	1.00		1.00	1.00	1.00	0.95	1.00	1.00	0.95	1.00
Frt		1.00	0.85		1.00	0.85	1.00	1.00	0.85	1.00	1.00	0.85
Flt Protected		0.95	1.00		0.96	1.00	0.95	1.00	1.00	0.95	1.00	1.00
Satd. Flow (prot)		1778	1583		1783	1583	1770	3539	1583	1770	3539	1583
Flt Permitted		0.67	1.00		0.72	1.00	0.34	1.00	1.00	0.58	1.00	1.00
Satd. Flow (perm)		1257	1583		1335	1583	635	3539	1583	1078	3539	1583
Volume (vph)	41	2	145	71	9	38	35	268	15	9	680	39
Peak-hour factor, PHF	0.95	0.95	0.95	0.95	0.95	0.95	0.95	0.95	0.95	0.95	0.95	0.95
Adj. Flow (vph)	43	2	153	75	9	40	37	282	16	9	716	41
RTOR Reduction (vph)	0	0	132	0	0	35	0	0	5	0	0	14
Lane Group Flow (vph)	0	45	21	0	84	5	37	282	11	9	716	27
Turn Type	Perm		Perm	Perm		Perm	pm+pt		Perm	pm+pt		Perm
Protected Phases		4			8		5	2		1	6	
Permitted Phases	4		4	8		8	2		2	6		6
Actuated Green, G (s)		9.3	9.3		9.3	9.3	61.9	58.7	58.7	57.5	56.5	56.5
Effective Green, g (s)		12.3	12.3		12.3	12.3	67.9	61.7	61.7	63.5	59.5	59.5
Actuated g/C Ratio		0.14	0.14		0.14	0.14	0.75	0.69	0.69	0.71	0.66	0.66
Clearance Time (s)		7.0	7.0		7.0	7.0	7.0	7.0	7.0	7.0	7.0	7.0
Vehicle Extension (s)		2.0	2.0		2.0	2.0	2.0	2.0	2.0	2.0	2.0	2.0
Lane Grp Cap (vph)		172	216		182	216	557	2426	1085	791	2340	1047
v/s Ratio Prot							c0.00	0.08		0.00	c0.20	
v/s Ratio Perm		0.04	0.01		c0.06	0.00	0.05		0.01	0.01		0.02
v/c Ratio		0.26	0.10		0.46	0.03	0.07	0.12	0.01	0.01	0.31	0.03
Uniform Delay, d1		34.8	34.0		35.8	33.7	3.0	4.8	4.5	3.9	6.5	5.3
Progression Factor		1.00	1.00		1.00	1.00	1.00	1.00	1.00	1.00	1.00	1.00
Incremental Delay, d2		0.3	0.1		0.7	0.0	0.0	0.1	0.0	0.0	0.3	0.0
Delay (s)		35.1	34.1		36.5	33.7	3.0	4.9	4.5	3.9	6.8	5.3
Level of Service		D	C		D	C	A	A	A	A	A	A
Approach Delay (s)		34.3			35.6			4.7			6.7	
Approach LOS		C			D			A			A	

Intersection Summary			
HCM Average Control Delay	12.6	HCM Level of Service	B
HCM Volume to Capacity ratio	0.33		
Actuated Cycle Length (s)	90.0	Sum of lost time (s)	16.0
Intersection Capacity Utilization	43.2%	ICU Level of Service	A
Analysis Period (min)	15		

c Critical Lane Group

Movement	EBL	EBT	EBR	WBL	WBT	WBR	NBL	NBT	NBR	SBL	SBT	SBR
Lane Configurations												
Ideal Flow (vphpl)	1900	1900	1900	1900	1900	1900	1900	1900	1900	1900	1900	1900
Total Lost time (s)	3.0	3.0	3.0	3.0	3.0	3.0	3.0	3.0	3.0	3.0	3.0	3.0
Lane Util. Factor	1.00	0.95	1.00	0.97	0.95	1.00	0.97	0.95	1.00	0.97	0.95	1.00
Frt	1.00	1.00	0.85	1.00	1.00	0.85	1.00	1.00	0.85	1.00	1.00	0.85
Flt Protected	0.95	1.00	1.00	0.95	1.00	1.00	0.95	1.00	1.00	0.95	1.00	1.00
Satd. Flow (prot)	1770	3539	1583	3433	3539	1583	3433	3539	1583	3433	3539	1583
Flt Permitted	0.95	1.00	1.00	0.95	1.00	1.00	0.95	1.00	1.00	0.95	1.00	1.00
Satd. Flow (perm)	1770	3539	1583	3433	3539	1583	3433	3539	1583	3433	3539	1583
Volume (vph)	123	362	217	226	138	157	125	424	319	318	379	35
Peak-hour factor, PHF	0.95	0.95	0.95	0.95	0.95	0.95	0.95	0.95	0.95	0.95	0.95	0.95
Adj. Flow (vph)	129	381	228	238	145	165	132	446	336	335	399	37
RTOR Reduction (vph)	0	0	0	0	0	0	0	0	0	0	0	0
Lane Group Flow (vph)	129	381	228	238	145	165	132	446	336	335	399	37
Turn Type	Prot		Free	Prot		Free	Prot		Free	Prot		Free
Protected Phases	7	4		3	8		5	2		1	6	
Permitted Phases			Free			Free			Free			Free
Actuated Green, G (s)	10.5	18.6	94.9	11.8	19.9	94.9	9.5	22.3	94.9	14.2	27.0	94.9
Effective Green, g (s)	14.5	22.6	94.9	15.8	23.9	94.9	13.5	26.3	94.9	18.2	31.0	94.9
Actuated g/C Ratio	0.15	0.24	1.00	0.17	0.25	1.00	0.14	0.28	1.00	0.19	0.33	1.00
Clearance Time (s)	7.0	7.0		7.0	7.0		7.0	7.0		7.0	7.0	
Vehicle Extension (s)	3.0	3.0		3.0	3.0		3.0	5.0		3.0	5.0	
Lane Grp Cap (vph)	270	843	1583	572	891	1583	488	981	1583	658	1156	1583
v/s Ratio Prot	c0.07	c0.11		0.07	0.04		0.04	c0.13		c0.10	0.11	
v/s Ratio Perm			0.14			0.10			c0.21			0.02
v/c Ratio	0.48	0.45	0.14	0.42	0.16	0.10	0.27	0.45	0.21	0.51	0.35	0.02
Uniform Delay, d1	36.7	30.9	0.0	35.4	27.7	0.0	36.3	28.4	0.0	34.3	24.2	0.0
Progression Factor	1.00	1.00	1.00	1.00	1.00	1.00	1.00	1.00	1.00	1.00	1.00	1.00
Incremental Delay, d2	1.3	0.4	0.2	0.5	0.1	0.1	0.3	0.7	0.3	0.6	0.4	0.0
Delay (s)	38.1	31.2	0.2	35.9	27.8	0.1	36.6	29.1	0.3	35.0	24.6	0.0
Level of Service	D	C	A	D	C	A	D	C	A	C	C	A
Approach Delay (s)		22.8			23.0			19.6			27.9	
Approach LOS		C			C			B			C	

Intersection Summary			
HCM Average Control Delay	23.2	HCM Level of Service	C
HCM Volume to Capacity ratio	0.47		
Actuated Cycle Length (s)	94.9	Sum of lost time (s)	12.0
Intersection Capacity Utilization	58.4%	ICU Level of Service	B
Analysis Period (min)	15		

c Critical Lane Group

Movement	EBL	EBR	NBL	NBT	SBT	SBR
Lane Configurations						
Ideal Flow (vphpl)	1900	1900	1900	1900	1900	1900
Total Lost time (s)	4.0			4.0	4.0	
Lane Util. Factor	1.00			1.00	1.00	
Frt	0.95			1.00	0.99	
Flt Protected	0.97			1.00	1.00	
Satd. Flow (prot)	1716			1861	1851	
Flt Permitted	0.97			0.98	1.00	
Satd. Flow (perm)	1716			1825	1851	
Volume (vph)	34	20	13	886	1002	48
Peak-hour factor, PHF	0.95	0.95	0.95	0.95	0.95	0.95
Adj. Flow (vph)	36	21	14	933	1055	51
RTOR Reduction (vph)	17	0	0	0	1	0
Lane Group Flow (vph)	40	0	0	947	1105	0
Turn Type			Perm			
Protected Phases	4			2	6	
Permitted Phases			2			
Actuated Green, G (s)	8.8			88.1	88.1	
Effective Green, g (s)	11.8			91.1	91.1	
Actuated g/C Ratio	0.11			0.82	0.82	
Clearance Time (s)	7.0			7.0	7.0	
Vehicle Extension (s)	4.0			3.0	3.0	
Lane Grp Cap (vph)	183			1499	1521	
v/s Ratio Prot	c0.02				c0.60	
v/s Ratio Perm				0.52		
v/c Ratio	0.22			0.63	0.73	
Uniform Delay, d1	45.3			3.7	4.4	
Progression Factor	1.00			1.00	1.00	
Incremental Delay, d2	0.8			0.9	1.8	
Delay (s)	46.2			4.6	6.1	
Level of Service	D			A	A	
Approach Delay (s)	46.2			4.6	6.1	
Approach LOS	D			A	A	

Intersection Summary			
HCM Average Control Delay	6.5	HCM Level of Service	A
HCM Volume to Capacity ratio	0.67		
Actuated Cycle Length (s)	110.9	Sum of lost time (s)	8.0
Intersection Capacity Utilization	72.0%	ICU Level of Service	C
Analysis Period (min)	15		

c Critical Lane Group

HCM Signalized Intersection Capacity Analysis
13: Nokes Blvd & Atlantic Blvd

Kincora
Future Background 2011

Movement	EBL	EBT	EBR	WBL	WBT	WBR	NBL	NBT	NBR	SBL	SBT	SBR
Lane Configurations												
Ideal Flow (vphpl)	1900	1900	1900	1900	1900	1900	1900	1900	1900	1900	1900	1900
Total Lost time (s)	4.0	4.0	4.0	3.0	4.0	3.0	4.0	3.0	3.0	3.0	3.0	4.0
Lane Util. Factor	0.97	0.95	1.00	0.97	0.95	1.00	0.97	0.95	1.00	0.97	0.95	1.00
Frt	1.00	1.00	0.85	1.00	1.00	0.85	1.00	1.00	0.85	1.00	1.00	0.85
Flt Protected	0.95	1.00	1.00	0.95	1.00	1.00	0.95	1.00	1.00	0.95	1.00	1.00
Satd. Flow (prot)	3433	3539	1583	3433	3539	1583	3433	3539	1583	3433	3539	1583
Flt Permitted	0.95	1.00	1.00	0.95	1.00	1.00	0.95	1.00	1.00	0.95	1.00	1.00
Satd. Flow (perm)	3433	3539	1583	3433	3539	1583	3433	3539	1583	3433	3539	1583
Volume (vph)	217	286	469	121	279	32	378	86	112	33	178	116
Peak-hour factor, PHF	0.95	0.95	0.95	0.95	0.95	0.95	0.95	0.95	0.95	0.95	0.95	0.95
Adj. Flow (vph)	228	301	494	127	294	34	398	91	118	35	187	122
RTOR Reduction (vph)	0	0	0	0	0	0	0	0	77	0	0	0
Lane Group Flow (vph)	228	301	494	127	294	34	398	91	41	35	187	122
Turn Type	Prot		Free	Prot		Free	Prot		pm+ov	Prot		Free
Protected Phases	1	6		5	2		7	4	5	3	8	
Permitted Phases			Free			Free			4			Free
Actuated Green, G (s)	13.7	67.5	140.0	10.0	63.8	140.0	20.2	30.7	40.7	4.3	14.8	140.0
Effective Green, g (s)	16.7	70.5	140.0	14.0	66.8	140.0	23.2	34.2	48.2	8.3	18.3	140.0
Actuated g/C Ratio	0.12	0.50	1.00	0.10	0.48	1.00	0.17	0.24	0.34	0.06	0.13	1.00
Clearance Time (s)	7.0	7.0		7.0	7.0		7.0	6.5	7.0	7.0	6.5	
Vehicle Extension (s)	2.5	4.0		2.5	4.0		2.5	2.5	2.5	2.5	2.5	
Lane Grp Cap (vph)	410	1782	1583	343	1689	1583	569	865	579	204	463	1583
v/s Ratio Prot	c0.07	0.09		0.04	0.08		c0.12	0.03	0.01	0.01	c0.05	
v/s Ratio Perm			c0.31			0.02			0.02			0.08
v/c Ratio	0.56	0.17	0.31	0.37	0.17	0.02	0.70	0.11	0.07	0.17	0.40	0.08
Uniform Delay, d1	58.2	18.9	0.0	58.9	20.9	0.0	55.1	41.0	30.8	62.6	55.8	0.0
Progression Factor	1.00	1.00	1.00	1.00	1.00	1.00	1.00	1.00	1.00	1.00	1.00	1.00
Incremental Delay, d2	1.3	0.2	0.5	0.5	0.2	0.0	3.5	0.0	0.0	0.3	0.4	0.1
Delay (s)	59.5	19.1	0.5	59.4	21.1	0.0	58.6	41.1	30.9	62.9	56.3	0.1
Level of Service	E	B	A	E	C	A	E	D	C	E	E	A
Approach Delay (s)		19.1			30.2			50.6			37.0	
Approach LOS		B			C			D			D	

Intersection Summary

HCM Average Control Delay	31.6	HCM Level of Service	C
HCM Volume to Capacity ratio	0.43		
Actuated Cycle Length (s)	140.0	Sum of lost time (s)	11.0
Intersection Capacity Utilization	47.7%	ICU Level of Service	A
Analysis Period (min)	15		

c Critical Lane Group

HCM Signalized Intersection Capacity Analysis
14: Nokes Blvd. & Cascades Parkway

Kincora
Future Background 2011

Movement	EBL	EBT	EBR	WBL	WBT	WBR	NBL	NBT	NBR	SBL	SBT	SBR
Lane Configurations												
Ideal Flow (vphpl)	1900	1900	1900	1900	1900	1900	1900	1900	1900	1900	1900	1900
Total Lost time (s)	3.0	3.0	3.0	3.0	3.0	3.0	3.0	3.0	3.0	3.0	3.0	3.0
Lane Util. Factor	0.97	1.00	1.00	1.00	0.95	1.00	0.97	0.95	1.00	1.00	0.95	1.00
Frt	1.00	1.00	0.85	1.00	1.00	0.85	1.00	1.00	0.85	1.00	1.00	0.85
Flt Protected	0.95	1.00	1.00	0.95	1.00	1.00	0.95	1.00	1.00	0.95	1.00	1.00
Satd. Flow (prot)	3433	1863	1583	1770	3539	1583	3433	3539	1583	1770	3539	1583
Flt Permitted	0.95	1.00	1.00	0.95	1.00	1.00	0.95	1.00	1.00	0.95	1.00	1.00
Satd. Flow (perm)	3433	1863	1583	1770	3539	1583	3433	3539	1583	1770	3539	1583
Volume (vph)	72	50	79	190	197	18	161	611	220	4	666	116
Peak-hour factor, PHF	0.95	0.95	0.95	0.95	0.95	0.95	0.95	0.95	0.95	0.95	0.95	0.95
Adj. Flow (vph)	76	53	83	200	207	19	169	643	232	4	701	122
RTOR Reduction (vph)	0	0	73	0	0	15	0	0	114	0	0	72
Lane Group Flow (vph)	76	53	10	200	207	4	169	643	118	4	701	50
Turn Type	Prot		Perm	Prot		Perm	Prot		Perm	Prot		Perm
Protected Phases	7	4		3	8		1	6		5	2	
Permitted Phases			4			8			6			2
Actuated Green, G (s)	7.6	7.7	7.7	16.6	16.7	16.7	11.3	48.0	48.0	1.6	38.3	38.3
Effective Green, g (s)	11.6	12.7	12.7	20.6	21.7	21.7	15.3	52.5	52.5	5.6	42.8	42.8
Actuated g/C Ratio	0.11	0.12	0.12	0.20	0.21	0.21	0.15	0.51	0.51	0.05	0.41	0.41
Clearance Time (s)	7.0	8.0	8.0	7.0	8.0	8.0	7.0	7.5	7.5	7.0	7.5	7.5
Vehicle Extension (s)	3.0	3.0	3.0	3.0	3.0	3.0	3.0	3.0	3.0	3.0	3.0	3.0
Lane Grp Cap (vph)	385	229	194	353	743	332	508	1797	804	98	1465	855
v/s Ratio Prot	0.02	0.03		c0.11	c0.06		c0.05	0.18		0.00	c0.20	
v/s Ratio Perm			0.01			0.00			0.07			0.03
v/c Ratio	0.20	0.23	0.05	0.57	0.28	0.01	0.33	0.36	0.15	0.04	0.48	0.08
Uniform Delay, d1	41.7	40.9	40.0	37.4	34.3	32.4	39.5	15.3	13.5	46.4	22.1	18.3
Progression Factor	1.00	1.00	1.00	1.00	1.00	1.00	1.00	1.00	1.00	1.00	1.00	1.00
Incremental Delay, d2	0.3	0.5	0.1	2.1	0.2	0.0	0.4	0.1	0.1	0.2	0.2	0.1
Delay (s)	41.9	41.5	40.2	39.5	34.5	32.4	39.9	15.4	13.6	46.5	22.4	18.4
Level of Service	D	D	D	D	C	C	D	B	B	D	C	B
Approach Delay (s)		41.1			36.7			19.0			21.9	
Approach LOS		D			D			B			C	

Intersection Summary

HCM Average Control Delay	24.8	HCM Level of Service	C
HCM Volume to Capacity ratio	0.44		
Actuated Cycle Length (s)	103.4	Sum of lost time (s)	9.0
Intersection Capacity Utilization	65.5%	ICU Level of Service	C
Analysis Period (min)	15		

c Critical Lane Group

Movement	EBL	EBR	NBL	NBT	SBT	SBR
Lane Configurations						
Ideal Flow (vphpl)	1900	1900	1900	1900	1900	1900
Total Lost time (s)	3.0	3.0	3.0	3.0	3.0	3.0
Lane Util. Factor	1.00	1.00	1.00	0.95	0.95	1.00
Frt	1.00	0.85	1.00	1.00	1.00	0.85
Flt Protected	0.95	1.00	0.95	1.00	1.00	1.00
Satd. Flow (prot)	1770	1583	1770	3539	3539	1583
Flt Permitted	0.95	1.00	0.26	1.00	1.00	1.00
Satd. Flow (perm)	1770	1583	476	3539	3539	1583
Volume (vph)	97	54	172	986	751	142
Peak-hour factor, PHF	0.95	0.95	0.95	0.95	0.95	0.95
Adj. Flow (vph)	102	57	181	1038	791	149
RTOR Reduction (vph)	0	47	0	0	0	47
Lane Group Flow (vph)	102	10	181	1038	791	102
Turn Type		Perm	pm+pt			pm+ov
Protected Phases	4		1	6	2	4
Permitted Phases		4	6			2
Actuated Green, G (s)	7.9	7.9	43.7	43.7	29.1	37.0
Effective Green, g (s)	11.9	11.9	47.2	47.2	32.6	44.5
Actuated g/C Ratio	0.18	0.18	0.73	0.73	0.50	0.68
Clearance Time (s)	7.0	7.0	7.0	6.5	6.5	7.0
Vehicle Extension (s)	3.0	3.0	4.0	4.0	4.0	3.0
Lane Grp Cap (vph)	324	289	576	2566	1772	1155
v/s Ratio Prot	c0.06		0.06	c0.29	c0.22	0.02
v/s Ratio Perm		0.01	0.17			0.05
v/c Ratio	0.31	0.04	0.31	0.40	0.45	0.09
Uniform Delay, d1	23.1	21.9	3.8	3.5	10.4	3.5
Progression Factor	1.00	1.00	1.00	1.00	1.00	1.00
Incremental Delay, d2	0.6	0.1	0.4	0.1	0.2	0.0
Delay (s)	23.6	21.9	4.2	3.6	10.7	3.5
Level of Service	C	C	A	A	B	A
Approach Delay (s)	23.0			3.7	9.6	
Approach LOS	C			A	A	

Intersection Summary

HCM Average Control Delay	7.4	HCM Level of Service	A
HCM Volume to Capacity ratio	0.41		
Actuated Cycle Length (s)	65.1	Sum of lost time (s)	9.0
Intersection Capacity Utilization	45.7%	ICU Level of Service	A
Analysis Period (min)	15		

c Critical Lane Group

Movement	EBL	EBT	EBR	WBL	WBT	WBR	NBL	NBT	NBR	SBL	SBT	SBR
Lane Configurations												
Ideal Flow (vphpl)	1900	1900	1900	1900	1900	1900	1900	1900	1900	1900	1900	1900
Total Lost time (s)	3.0	3.0	3.0	3.0	3.0	3.0	3.0	3.0	3.0	3.0	3.0	3.0
Lane Util. Factor	1.00	0.91	1.00	1.00	0.91	1.00	1.00	0.95	1.00	0.97	0.95	1.00
Frt	1.00	1.00	0.85	1.00	1.00	0.85	1.00	1.00	0.85	1.00	1.00	0.85
Flt Protected	0.95	1.00	1.00	0.95	1.00	1.00	0.95	1.00	1.00	0.95	1.00	1.00
Satd. Flow (prot)	1770	5085	1583	1770	5085	1583	1770	3539	1583	3433	3539	1583
Flt Permitted	0.95	1.00	1.00	0.95	1.00	1.00	0.95	1.00	1.00	0.95	1.00	1.00
Satd. Flow (perm)	1770	5085	1583	1770	5085	1583	1770	3539	1583	3433	3539	1583
Volume (vph)	148	1161	252	103	385	362	62	227	110	729	535	413
Peak-hour factor, PHF	0.95	0.95	0.95	0.95	0.95	0.95	0.95	0.95	0.95	0.95	0.95	0.95
Adj. Flow (vph)	156	1222	265	108	405	381	65	239	116	767	563	435
RTOR Reduction (vph)	0	0	0	0	0	0	0	0	12	0	0	89
Lane Group Flow (vph)	156	1222	265	108	405	381	65	239	104	767	563	346
Turn Type	Prot		Free	Prot		Free	Prot		pm+ov	Prot		pm+ov
Protected Phases	1	6		5	2		3	8	5	7	4	1
Permitted Phases			Free			Free			8			4
Actuated Green, G (s)	16.5	43.4	130.0	13.7	40.8	130.0	4.8	14.1	27.8	31.3	40.6	57.1
Effective Green, g (s)	20.5	47.4	130.0	17.7	44.6	130.0	8.8	17.6	35.3	35.3	44.1	64.6
Actuated g/C Ratio	0.16	0.36	1.00	0.14	0.34	1.00	0.07	0.14	0.27	0.27	0.34	0.50
Clearance Time (s)	7.0	7.0		7.0	7.0		7.0	6.5	7.0	7.0	6.5	7.0
Vehicle Extension (s)	2.0	3.0		2.0	3.0		2.0	2.0	2.0	2.0	2.0	2.0
Lane Grp Cap (vph)	279	1854	1583	241	1745	1583	120	479	466	932	1201	823
v/s Ratio Prot	c0.09	c0.24		0.06	0.08		0.04	0.07	0.03	c0.22	c0.16	0.07
v/s Ratio Perm			0.17			c0.24			0.04			0.15
v/c Ratio	0.56	0.66	0.17	0.45	0.23	0.24	0.54	0.50	0.22	0.82	0.47	0.42
Uniform Delay, d1	50.6	34.5	0.0	51.7	30.5	0.0	58.6	52.1	36.7	44.4	33.7	20.8
Progression Factor	1.00	1.00	1.00	0.83	0.78	1.00	1.00	1.00	1.00	1.00	1.00	1.00
Incremental Delay, d2	1.4	1.9	0.2	0.5	0.3	0.4	2.7	0.3	0.1	5.7	0.1	0.1
Delay (s)	52.0	36.4	0.2	43.5	24.2	0.4	61.3	52.4	36.8	50.1	33.9	20.9
Level of Service	D	D	A	D	C	A	E	D	D	D	C	C
Approach Delay (s)		32.0			16.4			49.5			37.7	
Approach LOS		C			B			D			D	

Intersection Summary

HCM Average Control Delay	32.8	HCM Level of Service	C
HCM Volume to Capacity ratio	0.65		
Actuated Cycle Length (s)	130.0	Sum of lost time (s)	6.0
Intersection Capacity Utilization	68.5%	ICU Level of Service	C
Analysis Period (min)	15		

c Critical Lane Group

Movement	EBL	EBT	EBR	WBL	WBT	WBR	NBL	NBT	NBR	SBL	SBT	SBR
Lane Configurations												
Ideal Flow (vphpl)	1900	1900	1900	1900	1900	1900	1900	1900	1900	1900	1900	1900
Total Lost time (s)	3.0	3.0	3.0	3.0	3.0	3.0	3.0	3.0	3.0	3.0	3.0	
Lane Util. Factor	1.00	0.91	1.00	1.00	0.91	1.00	1.00	0.95	1.00	1.00	0.95	
Frt	1.00	1.00	0.85	1.00	1.00	0.85	1.00	1.00	0.85	1.00	0.91	
Flt Protected	0.95	1.00	1.00	0.95	1.00	1.00	0.95	1.00	1.00	0.95	1.00	
Satd. Flow (prot)	1770	5085	1583	1770	5085	1583	1770	3539	1583	1770	3227	
Flt Permitted	0.95	1.00	1.00	0.95	1.00	1.00	0.73	1.00	1.00	0.55	1.00	
Satd. Flow (perm)	1770	5085	1583	1770	5085	1583	1367	3539	1583	1028	3227	
Volume (vph)	57	1923	43	235	740	112	24	55	90	92	13	19
Peak-hour factor, PHF	0.95	0.95	0.95	0.95	0.95	0.95	0.95	0.95	0.95	0.95	0.95	0.95
Adj. Flow (vph)	60	2024	45	247	779	118	25	58	95	97	14	20
RTOR Reduction (vph)	0	0	20	0	0	29	0	0	0	0	17	0
Lane Group Flow (vph)	60	2024	25	247	779	89	25	58	95	97	17	0
Turn Type	Prot		pm+ov	Prot		pm+ov	pm+pt		Free	pm+pt		
Protected Phases	1	6	3	5	2	7	3	8		7	4	
Permitted Phases			6			2	8		Free	4		
Actuated Green, G (s)	5.6	63.4	66.6	21.8	79.1	92.9	9.7	6.5	130.0	25.3	17.1	
Effective Green, g (s)	9.6	66.9	72.1	25.3	82.6	98.4	15.2	10.0	130.0	28.8	20.6	
Actuated g/C Ratio	0.07	0.51	0.55	0.19	0.64	0.76	0.12	0.08	1.00	0.22	0.16	
Clearance Time (s)	7.0	6.5	5.0	6.5	6.5	5.0	5.0	6.5		5.0	6.5	
Vehicle Extension (s)	2.0	3.0	2.0	2.0	3.0	2.0	2.0	2.0		2.0	2.0	
Lane Grp Cap (vph)	131	2617	914	344	3231	1235	176	272	1583	318	511	
v/s Ratio Prot	0.03	c0.40	0.00	c0.14	0.15	0.01	0.01	0.02		c0.04	0.01	
v/s Ratio Perm			0.01			0.05	0.01		0.06	c0.03		
v/c Ratio	0.46	0.77	0.03	0.72	0.24	0.07	0.14	0.21	0.06	0.31	0.03	
Uniform Delay, d1	57.7	25.4	13.1	49.0	10.2	4.1	51.4	56.3	0.0	41.7	46.3	
Progression Factor	1.10	0.65	0.15	1.00	1.00	1.00	1.00	1.00	1.00	1.00	1.00	
Incremental Delay, d2	0.7	1.7	0.0	5.9	0.2	0.0	0.1	0.1	0.1	0.2	0.1	
Delay (s)	64.4	18.3	2.0	54.9	10.4	4.1	51.6	56.5	0.1	41.9	46.4	
Level of Service	E	B	A	D	B	A	D	E	A	D	D	
Approach Delay (s)		19.3			19.3			25.7			43.1	
Approach LOS		B			B			C			D	

Intersection Summary			
HCM Average Control Delay	20.5	HCM Level of Service	C
HCM Volume to Capacity ratio	0.65		
Actuated Cycle Length (s)	130.0	Sum of lost time (s)	9.0
Intersection Capacity Utilization	71.9%	ICU Level of Service	C
Analysis Period (min)	15		

c Critical Lane Group

Movement	EBL	EBT	EBR	WBL	WBT	WBR	NBL	NBT	NBR	SBL	SBT	SBR
Lane Configurations												
Ideal Flow (vphpl)	1900	1900	1900	1900	1900	1900	1900	1900	1900	1900	1900	1900
Total Lost time (s)	3.0	3.0	3.0	3.0	3.0	3.0	3.0	3.0	3.0	3.0	3.0	3.0
Lane Util. Factor	0.97	0.86	1.00	0.97	0.86	1.00	0.97	0.95	1.00	0.97	0.95	1.00
Frt	1.00	1.00	0.85	1.00	1.00	0.85	1.00	1.00	0.85	1.00	1.00	0.85
Flt Protected	0.95	1.00	1.00	0.95	1.00	1.00	0.95	1.00	1.00	0.95	1.00	1.00
Satd. Flow (prot)	3433	6408	1583	3433	6408	1583	3433	3539	1583	3433	3539	1583
Flt Permitted	0.95	1.00	1.00	0.95	1.00	1.00	0.95	1.00	1.00	0.95	1.00	1.00
Satd. Flow (perm)	3433	6408	1583	3433	6408	1583	3433	3539	1583	3433	3539	1583
Volume (vph)	120	3056	10	427	1999	198	7	5	53	149	53	62
Peak-hour factor, PHF	0.95	0.95	0.95	0.95	0.95	0.95	0.95	0.95	0.95	0.95	0.95	0.95
Adj. Flow (vph)	126	3217	11	449	2104	208	7	5	56	157	56	65
RTOR Reduction (vph)	0	0	4	0	0	0	0	0	0	0	0	0
Lane Group Flow (vph)	126	3217	7	449	2104	208	7	5	56	157	56	65
Turn Type	Prot		Perm	Prot		Free	Prot		Free	Prot		Free
Protected Phases	1	6		5	2		7	4		3	8	
Permitted Phases			6			Free			Free			Free
Actuated Green, G (s)	8.5	85.4	85.4	23.3	100.2	145.0	1.2	1.2	145.0	7.1	7.1	145.0
Effective Green, g (s)	12.5	89.4	89.4	27.3	104.2	145.0	5.2	5.2	145.0	11.1	11.1	145.0
Actuated g/C Ratio	0.09	0.62	0.62	0.19	0.72	1.00	0.04	0.04	1.00	0.08	0.08	1.00
Clearance Time (s)	7.0	7.0	7.0	7.0	7.0		7.0	7.0		7.0	7.0	
Vehicle Extension (s)	2.0	3.0	3.0	2.0	3.0		3.0	3.0		3.0	3.0	
Lane Grp Cap (vph)	296	3951	976	646	4605	1583	123	127	1583	263	271	1583
v/s Ratio Prot	0.04	c0.50		c0.13	0.33		0.00	0.00		c0.05	c0.02	
v/s Ratio Perm			0.00			0.13			0.04			0.04
v/c Ratio	0.43	0.81	0.01	0.70	0.46	0.13	0.06	0.04	0.04	0.60	0.21	0.04
Uniform Delay, d1	62.8	21.4	10.7	55.0	8.5	0.0	67.5	67.5	0.0	64.8	62.8	0.0
Progression Factor	1.00	1.00	1.00	1.00	1.00	1.00	1.00	1.00	1.00	1.00	1.00	1.00
Incremental Delay, d2	0.4	2.0	0.0	2.6	0.3	0.2	0.2	0.1	0.0	3.6	0.4	0.0
Delay (s)	63.2	23.4	10.7	57.6	8.9	0.2	67.7	67.6	0.0	68.4	63.2	0.0
Level of Service	E	C	B	E	A	A	E	E	A	E	E	A
Approach Delay (s)		24.8			16.1			12.0			51.4	
Approach LOS		C			B			B			D	

Intersection Summary			
HCM Average Control Delay	22.1	HCM Level of Service	C
HCM Volume to Capacity ratio	0.74		
Actuated Cycle Length (s)	145.0	Sum of lost time (s)	9.0
Intersection Capacity Utilization	77.4%	ICU Level of Service	D
Analysis Period (min)	15		

c Critical Lane Group

Movement	EBL	EBT	EBR	WBL	WBT	WBR	NBL	NBT	NBR	SBL	SBT	SBR
Lane Configurations												
Ideal Flow (vphpl)	1900	1900	1900	1900	1900	1900	1900	1900	1900	1900	1900	1900
Total Lost time (s)		3.0		3.0	3.0			3.0	3.0		3.0	
Lane Util. Factor		0.95		1.00	0.95			1.00	1.00		1.00	
Frt		0.98		1.00	1.00			1.00	0.85		0.91	
Flt Protected		1.00		0.95	1.00			0.95	1.00		0.99	
Satd. Flow (prot)		3450		1770	3536			1776	1583		1676	
Flt Permitted		0.91		0.10	1.00			0.95	1.00		0.99	
Satd. Flow (perm)		3146		192	3536			1776	1583		1676	
Volume (vph)	24	952	188	218	1111	7	118	3	144	4	3	14
Peak-hour factor, PHF	0.95	0.95	0.95	0.95	0.95	0.95	0.95	0.95	0.95	0.95	0.95	0.95
Adj. Flow (vph)	25	1002	198	229	1169	7	124	3	152	4	3	15
RTOR Reduction (vph)	0	14	0	0	0	0	0	0	0	0	14	0
Lane Group Flow (vph)	0	1211	0	229	1176	0	0	127	152	0	8	0
Turn Type	Perm			pm+pt			Split		pm+ov	Split		
Protected Phases		6		5	2		4	4	5	8	8	
Permitted Phases	6			2					4			
Actuated Green, G (s)		35.0		49.8	49.8			8.3	17.6		2.3	
Effective Green, g (s)		38.0		52.8	52.8			11.3	23.1		5.3	
Actuated g/C Ratio		0.48		0.67	0.67			0.14	0.29		0.07	
Clearance Time (s)		6.0		5.5	6.0			6.0	5.5		6.0	
Vehicle Extension (s)		4.0		2.0	4.0			3.0	2.0		3.0	
Lane Grp Cap (vph)		1525		367	2381			256	466		113	
v/s Ratio Prot				c0.09	0.33			c0.07	0.05		c0.00	
v/s Ratio Perm		c0.38		0.33					0.05			
v/c Ratio		0.79		0.62	0.49			0.50	0.33		0.07	
Uniform Delay, d1		16.9		14.0	6.3			30.9	21.6		34.2	
Progression Factor		1.00		1.00	1.00			1.00	1.00		1.00	
Incremental Delay, d2		3.1		2.4	0.2			1.5	0.1		0.3	
Delay (s)		20.0		16.4	6.5			32.4	21.7		34.5	
Level of Service		C		B	A			C	C		C	
Approach Delay (s)		20.0			8.1			26.6			34.5	
Approach LOS		C			A			C			C	

Intersection Summary			
HCM Average Control Delay	15.0	HCM Level of Service	B
HCM Volume to Capacity ratio	0.66		
Actuated Cycle Length (s)	78.4	Sum of lost time (s)	12.0
Intersection Capacity Utilization	87.3%	ICU Level of Service	E
Analysis Period (min)	15		
c Critical Lane Group			

Movement	EBL	EBT	WBT	WBR	SBL	SBR
Lane Configurations						
Ideal Flow (vphpl)	1900	1900	1900	1900	1900	1900
Total Lost time (s)	3.0	3.0	3.0	3.0	3.0	3.0
Lane Util. Factor	0.97	0.95	0.91	0.91	0.97	1.00
Frt	1.00	1.00	1.00	0.85	1.00	0.85
Flt Protected	0.95	1.00	1.00	1.00	0.95	1.00
Satd. Flow (prot)	3433	3539	3390	1441	3433	1583
Flt Permitted	0.95	1.00	1.00	1.00	0.95	1.00
Satd. Flow (perm)	3433	3539	3390	1441	3433	1583
Volume (vph)	659	422	412	362	286	538
Peak-hour factor, PHF	0.95	0.95	0.95	0.95	0.95	0.95
Adj. Flow (vph)	694	444	434	381	301	566
RTOR Reduction (vph)	0	0	0	28	0	415
Lane Group Flow (vph)	694	444	434	353	301	151
Turn Type	Prot			pm+ov		Perm
Protected Phases	5	2	6	4	4	
Permitted Phases				6		4
Actuated Green, G (s)	18.9	43.5	17.6	32.5	14.9	14.9
Effective Green, g (s)	22.9	47.5	21.6	41.0	19.4	19.4
Actuated g/C Ratio	0.31	0.65	0.30	0.56	0.27	0.27
Clearance Time (s)	7.0	7.0	7.0	7.5	7.5	7.5
Vehicle Extension (s)	2.0	3.0	3.0	3.0	3.0	3.0
Lane Grp Cap (vph)	1078	2306	1004	870	914	421
v/s Ratio Prot	c0.20	0.13	c0.13	c0.11	0.09	
v/s Ratio Perm				0.14		0.10
v/c Ratio	0.64	0.19	0.43	0.41	0.33	0.36
Uniform Delay, d1	21.5	5.1	20.7	9.0	21.5	21.7
Progression Factor	1.00	1.00	1.00	1.00	1.00	1.00
Incremental Delay, d2	1.0	0.0	0.3	0.3	0.2	0.5
Delay (s)	22.5	5.1	21.0	9.4	21.7	22.2
Level of Service	C	A	C	A	C	C
Approach Delay (s)		15.7	15.6		22.0	
Approach LOS		B	B		C	

Intersection Summary			
HCM Average Control Delay	17.6	HCM Level of Service	B
HCM Volume to Capacity ratio	0.49		
Actuated Cycle Length (s)	72.9	Sum of lost time (s)	6.0
Intersection Capacity Utilization	55.2%	ICU Level of Service	B
Analysis Period (min)	15		
c Critical Lane Group			

Movement	EBL	EBT	EBR	WBL	WBT	WBR	NBL	NBT	NBR	SBL	SBT	SBR
Lane Configurations												
Ideal Flow (vphpl)	1900	1900	1900	1900	1900	1900	1900	1900	1900	1900	1900	1900
Total Lost time (s)		4.0	4.0	4.0		4.0	4.0	4.0	4.0	4.0	4.0	4.0
Lane Util. Factor		1.00	1.00	1.00		1.00	1.00	0.95	1.00	1.00	0.95	1.00
Frt		1.00	0.85	1.00		0.85	1.00	1.00	0.85	1.00	1.00	0.85
Flt Protected		0.95	1.00	0.95		1.00	0.95	1.00	1.00	0.95	1.00	1.00
Satd. Flow (prot)		1770	1583	1770		1583	1770	3539	1583	1770	3539	1583
Flt Permitted		0.76	1.00	0.70		1.00	0.95	1.00	1.00	0.95	1.00	1.00
Satd. Flow (perm)		1410	1583	1298		1583	1770	3539	1583	1770	3539	1583
Volume (vph)	88	0	117	9	0	26	143	816	63	190	789	158
Peak-hour factor, PHF	0.95	0.95	0.95	0.95	0.95	0.95	0.95	0.95	0.95	0.95	0.95	0.95
Adj. Flow (vph)	93	0	123	9	0	27	151	859	66	200	831	166
RTOR Reduction (vph)	0	0	102	0	0	22	0	0	33	0	0	80
Lane Group Flow (vph)	0	93	21	9	0	5	151	859	33	200	831	86
Turn Type	Perm		Perm	Perm		Perm	Prot		Perm	Prot		Perm
Protected Phases		4			8		5	2		1	6	
Permitted Phases	4		4	8		8			2			6
Actuated Green, G (s)		10.1	10.1	10.1		10.1	9.7	35.6	35.6	11.5	37.4	37.4
Effective Green, g (s)		13.1	13.1	13.1		13.1	12.7	38.6	38.6	14.5	40.4	40.4
Actuated g/C Ratio		0.17	0.17	0.17		0.17	0.16	0.49	0.49	0.19	0.52	0.52
Clearance Time (s)		7.0	7.0	7.0		7.0	7.0	7.0	7.0	7.0	7.0	7.0
Vehicle Extension (s)		3.0	3.0	3.0		3.0	2.0	3.0	3.0	2.0	3.0	3.0
Lane Grp Cap (vph)		236	265	217		265	287	1747	781	328	1828	818
v/s Ratio Prot							0.09	c0.24		c0.11	0.23	
v/s Ratio Perm		c0.07	0.01	0.01		0.00			0.02			0.05
v/c Ratio		0.39	0.08	0.04		0.02	0.53	0.49	0.04	0.61	0.45	0.10
Uniform Delay, d1		29.0	27.5	27.3		27.2	30.0	13.2	10.2	29.3	11.9	9.7
Progression Factor		1.00	1.00	1.00		1.00	1.00	1.00	1.00	1.00	1.00	1.00
Incremental Delay, d2		1.1	0.1	0.1		0.0	0.8	0.2	0.0	2.2	0.2	0.1
Delay (s)		30.1	27.6	27.4		27.2	30.8	13.5	10.3	31.5	12.1	9.7
Level of Service		C	C	C		C	C	B	B	C	B	A
Approach Delay (s)		28.7			27.2			15.7			15.0	
Approach LOS		C			C			B			B	

Intersection Summary			
HCM Average Control Delay	16.6	HCM Level of Service	B
HCM Volume to Capacity ratio	0.50		
Actuated Cycle Length (s)	78.2	Sum of lost time (s)	12.0
Intersection Capacity Utilization	54.6%	ICU Level of Service	A
Analysis Period (min)	15		

c Critical Lane Group

Movement	EBL	EBT	WBT	WBR	SWL	SWR
Lane Configurations						
Sign Control		Free	Free		Stop	
Grade		0%	0%		0%	
Volume (veh/h)	0	64	234	0	0	127
Peak Hour Factor	0.92	0.92	0.92	0.92	0.92	0.92
Hourly flow rate (vph)	0	70	254	0	0	138
Pedestrians						
Lane Width (ft)						
Walking Speed (ft/s)						
Percent Blockage						
Right turn flare (veh)						
Median type					None	
Median storage veh)						
Upstream signal (ft)						
pX, platoon unblocked						
vC, conflicting volume	254				289	127
vC1, stage 1 conf vol						
vC2, stage 2 conf vol						
vCu, unblocked vol	254				289	127
tC, single (s)	4.1				6.8	6.9
tC, 2 stage (s)						
tF (s)	2.2				3.5	3.3
p0 queue free %	100				100	85
cM capacity (veh/h)	1308				678	899

Direction, Lane #	EB 1	EB 2	WB 1	WB 2	SW 1	SW 2
Volume Total	35	35	127	127	69	69
Volume Left	0	0	0	0	0	0
Volume Right	0	0	0	0	69	69
cSH	1700	1700	1700	1700	899	899
Volume to Capacity	0.02	0.02	0.07	0.07	0.08	0.08
Queue Length 95th (ft)	0	0	0	0	6	6
Control Delay (s)	0.0	0.0	0.0	0.0	9.3	9.3
Lane LOS					A	A
Approach Delay (s)	0.0		0.0		9.3	
Approach LOS					A	

Intersection Summary			
Average Delay	2.8		
Intersection Capacity Utilization	17.6%	ICU Level of Service	A
Analysis Period (min)	15		

HCM Signalized Intersection Capacity Analysis
5: Route 7 & Countryside Blvd.

Kincora
Future Background 2011

Movement	EBL	EBT	EBR	WBL	WBT	WBR	NBL	NBT	NBR	SBL	SBT	SBR
Lane Configurations												
Ideal Flow (vphpl)	1900	1900	1900	1900	1900	1900	1900	1900	1900	1900	1900	1900
Total Lost time (s)	3.0	3.0	3.0	3.0	3.0	3.0	3.0	3.0	3.0	3.0	3.0	3.0
Lane Util. Factor	0.97	0.86	1.00	0.97	0.86	1.00	0.97	0.95	1.00	0.97	0.95	1.00
Frt	1.00	1.00	0.85	1.00	1.00	0.85	1.00	1.00	0.85	1.00	1.00	0.85
Flt Protected	0.95	1.00	1.00	0.95	1.00	1.00	0.95	1.00	1.00	0.95	1.00	1.00
Satd. Flow (prot)	3433	6408	1583	3433	6408	1583	3433	3539	1583	3433	3539	1583
Flt Permitted	0.95	1.00	1.00	0.95	1.00	1.00	0.95	1.00	1.00	0.95	1.00	1.00
Satd. Flow (perm)	3433	6408	1583	3433	6408	1583	3433	3539	1583	3433	3539	1583
Volume (vph)	451	1921	158	643	2327	214	225	148	383	186	163	286
Peak-hour factor, PHF	0.95	0.95	0.95	0.95	0.95	0.95	0.95	0.95	0.95	0.95	0.95	0.95
Adj. Flow (vph)	475	2022	166	677	2449	225	237	156	403	196	172	301
RTOR Reduction (vph)	0	0	0	0	0	48	0	0	0	0	0	4
Lane Group Flow (vph)	475	2022	166	677	2449	177	237	156	403	196	172	297
Turn Type	Prot		Free	Prot		pm+ov	Prot		Free	Prot		pm+ov
Protected Phases	1	6		5	2	3	7	4		3	8	1
Permitted Phases			Free			2			Free			8
Actuated Green, G (s)	24.6	64.4	150.0	34.0	73.8	86.1	10.0	11.3	150.0	12.3	13.6	38.2
Effective Green, g (s)	26.6	68.4	150.0	38.0	77.8	94.1	14.0	15.3	150.0	16.3	17.6	46.2
Actuated g/C Ratio	0.19	0.46	1.00	0.25	0.52	0.63	0.09	0.10	1.00	0.11	0.12	0.31
Clearance Time (s)	7.0	7.0		7.0	7.0	7.0	7.0	7.0		7.0	7.0	7.0
Vehicle Extension (s)	2.0	2.0		3.0	2.0	2.0	2.0	2.0		2.0	2.0	2.0
Lane Grp Cap (vph)	655	2922	1583	870	3324	1025	320	361	1583	373	415	519
v/s Ratio Prot	0.14	0.32		c0.20	c0.38	0.02	c0.07	0.04		0.06	0.05	c0.11
v/s Ratio Perm			0.10			0.09			c0.25			0.08
v/c Ratio	0.73	0.69	0.10	0.78	0.74	0.17	0.74	0.43	0.25	0.53	0.41	0.57
Uniform Delay, d1	57.0	32.4	0.0	52.1	28.1	11.7	66.2	63.3	0.0	63.2	61.4	43.6
Progression Factor	1.00	1.00	1.00	1.00	1.00	1.00	1.00	1.00	1.00	1.00	1.00	1.00
Incremental Delay, d2	3.4	1.4	0.1	4.4	1.5	0.0	7.8	0.3	0.4	0.6	0.2	0.9
Delay (s)	60.4	33.8	0.1	56.5	29.6	11.7	74.1	63.6	0.4	63.8	61.7	44.5
Level of Service	E	C	A	E	C	B	E	E	A	E	E	D
Approach Delay (s)		36.4			33.9			34.7			54.6	
Approach LOS		D			C			C			D	

Intersection Summary			
HCM Average Control Delay	36.7	HCM Level of Service	D
HCM Volume to Capacity ratio	0.72		
Actuated Cycle Length (s)	150.0	Sum of lost time (s)	6.0
Intersection Capacity Utilization	71.3%	ICU Level of Service	C
Analysis Period (min)	15		

c Critical Lane Group

HCM Signalized Intersection Capacity Analysis
6: Route 7 & Palisade Parkway

Kincora
Future Background 2011

Movement	EBL	EBT	EBR	WBL	WBT	WBR	NBL	NBT	NBR	SBL	SBT	SBR
Lane Configurations												
Ideal Flow (vphpl)	1900	1900	1900	1900	1900	1900	1900	1900	1900	1900	1900	1900
Total Lost time (s)	3.0	3.0	3.0	3.0	3.0	3.0	3.0	3.0	3.0	3.0	3.0	3.0
Lane Util. Factor	0.97	0.86	1.00	1.00	0.86	1.00	0.97	1.00	1.00	0.97	1.00	1.00
Frt	1.00	1.00	0.85	1.00	1.00	0.85	1.00	1.00	0.85	1.00	1.00	0.85
Flt Protected	0.95	1.00	1.00	0.95	1.00	1.00	0.95	1.00	1.00	0.95	1.00	1.00
Satd. Flow (prot)	3433	6408	1583	1770	6408	1583	3433	1863	1583	3433	1863	1583
Flt Permitted	0.95	1.00	1.00	0.95	1.00	1.00	0.95	1.00	1.00	0.95	1.00	1.00
Satd. Flow (perm)	3433	6408	1583	1770	6408	1583	3433	1863	1583	3433	1863	1583
Volume (vph)	263	2072	25	74	2522	161	391	97	234	225	77	234
Peak-hour factor, PHF	0.95	0.95	0.95	0.95	0.95	0.95	0.95	0.95	0.95	0.95	0.95	0.95
Adj. Flow (vph)	277	2181	26	78	2655	169	412	102	246	237	81	246
RTOR Reduction (vph)	0	0	0	0	0	0	0	0	92	0	0	0
Lane Group Flow (vph)	277	2181	26	78	2655	169	412	102	154	237	81	248
Turn Type	Prot		Free	Prot		Free	Split		pm+ov	Split		pm+ov
Protected Phases	1	6		5	2		4	4	5	3	3	1
Permitted Phases			Free			Free			4			3
Actuated Green, G (s)	7.0	47.9	120.0	8.1	49.0	120.0	22.9	22.9	31.0	13.1	13.1	20.1
Effective Green, g (s)	11.0	51.9	120.0	12.1	53.0	120.0	26.9	26.9	39.0	17.1	17.1	28.1
Actuated g/C Ratio	0.09	0.43	1.00	0.10	0.44	1.00	0.22	0.22	0.32	0.14	0.14	0.23
Clearance Time (s)	7.0	7.0		7.0	7.0		7.0	7.0	7.0	7.0	7.0	7.0
Vehicle Extension (s)	2.0	4.0		2.0	4.0		3.0	3.0	2.0	3.0	3.0	2.0
Lane Grp Cap (vph)	315	2771	1583	178	2830	1583	770	418	554	489	265	371
v/s Ratio Prot	c0.08	0.34		0.04	c0.41		c0.12	0.05	0.03	0.07	0.04	c0.06
v/s Ratio Perm			0.02			c0.11			0.07			0.09
v/c Ratio	0.88	0.79	0.02	0.44	0.94	0.11	0.54	0.24	0.28	0.48	0.31	0.66
Uniform Delay, d1	53.8	29.3	0.0	50.8	31.9	0.0	41.0	38.2	30.0	47.4	46.1	41.7
Progression Factor	1.00	1.00	1.00	1.00	1.00	1.00	1.00	1.00	1.00	1.00	1.00	1.00
Incremental Delay, d2	22.5	2.3	0.0	0.6	7.6	0.1	0.7	0.3	0.1	0.8	0.7	3.4
Delay (s)	76.4	31.6	0.0	51.4	39.5	0.1	41.8	38.5	30.1	48.2	46.8	45.1
Level of Service	E	C	A	D	D	A	D	D	C	D	D	D
Approach Delay (s)		36.3			37.5			37.6			46.6	
Approach LOS		D			D			D			D	

Intersection Summary			
HCM Average Control Delay	37.8	HCM Level of Service	D
HCM Volume to Capacity ratio	0.77		
Actuated Cycle Length (s)	120.0	Sum of lost time (s)	9.0
Intersection Capacity Utilization	72.2%	ICU Level of Service	C
Analysis Period (min)	15		

c Critical Lane Group

Movement	WBL	WBR	NBT	NBR	SBL	SBT
Lane Configurations						
Ideal Flow (vphpl)	1900	1900	1900	1900	1900	1900
Total Lost time (s)	3.0	3.0	3.0		3.0	3.0
Lane Util. Factor	1.00	1.00	0.95		1.00	0.95
Frt	1.00	0.85	0.98		1.00	1.00
Flt Protected	0.95	1.00	1.00		0.95	1.00
Satd. Flow (prot)	1770	1583	3453		1770	3539
Flt Permitted	0.95	1.00	1.00		0.23	1.00
Satd. Flow (perm)	1770	1583	3453		434	3539
Volume (vph)	112	262	601	117	250	534
Peak-hour factor, PHF	0.95	0.95	0.95	0.95	0.95	0.95
Adj. Flow (vph)	118	276	633	123	263	562
RTOR Reduction (vph)	0	115	14	0	0	0
Lane Group Flow (vph)	118	161	742	0	263	562
Turn Type		pm+ov			pm+pt	
Protected Phases	4	1	2		1	6
Permitted Phases		4			6	
Actuated Green, G (s)	6.9	15.5	18.0		33.6	33.6
Effective Green, g (s)	10.9	23.5	22.5		38.1	38.1
Actuated g/C Ratio	0.20	0.43	0.41		0.69	0.69
Clearance Time (s)	7.0	7.0	7.5		7.0	7.5
Vehicle Extension (s)	2.0	2.0	2.0		2.0	2.0
Lane Grp Cap (vph)	351	763	1413		607	2452
v/s Ratio Prot	c0.07	0.05	c0.21		c0.10	0.16
v/s Ratio Perm		0.05			0.20	
v/c Ratio	0.34	0.21	0.52		0.43	0.23
Uniform Delay, d1	18.9	9.9	12.2		4.3	3.1
Progression Factor	1.00	1.00	1.00		1.00	1.00
Incremental Delay, d2	0.2	0.1	0.2		0.2	0.0
Delay (s)	19.1	10.0	12.4		4.5	3.1
Level of Service	B	A	B		A	A
Approach Delay (s)	12.7		12.4			3.5
Approach LOS	B		B			A

Intersection Summary			
HCM Average Control Delay	8.8	HCM Level of Service	A
HCM Volume to Capacity ratio	0.46		
Actuated Cycle Length (s)	55.0	Sum of lost time (s)	9.0
Intersection Capacity Utilization	50.4%	ICU Level of Service	A
Analysis Period (min)	15		

c Critical Lane Group

Movement	EBL	EBT	EBR	WBL	WBT	WBR	NBL	NBT	NBR	SBL	SBT	SBR
Lane Configurations												
Ideal Flow (vphpl)	1900	1900	1900	1900	1900	1900	1900	1900	1900	1900	1900	1900
Total Lost time (s)		4.0	4.0		4.0	4.0	4.0	4.0	4.0	4.0	4.0	4.0
Lane Util. Factor		1.00	1.00		1.00	1.00	1.00	0.95	1.00	1.00	0.95	1.00
Frt		1.00	0.85		1.00	0.85	1.00	1.00	0.85	1.00	1.00	0.85
Flt Protected		0.96	1.00		0.95	1.00	0.95	1.00	1.00	0.95	1.00	1.00
Satd. Flow (prot)		1779	1583		1770	1583	1770	3539	1583	1770	3539	1583
Flt Permitted		0.71	1.00		0.74	1.00	0.41	1.00	1.00	0.35	1.00	1.00
Satd. Flow (perm)		1323	1583		1370	1583	757	3539	1583	658	3539	1583
Volume (vph)	29	2	82	37	0	30	148	739	83	29	539	72
Peak-hour factor, PHF	0.95	0.95	0.95	0.95	0.95	0.95	0.95	0.95	0.95	0.95	0.95	0.95
Adj. Flow (vph)	31	2	86	39	0	32	156	778	87	31	567	76
RTOR Reduction (vph)	0	0	70	0	0	27	0	0	25	0	0	24
Lane Group Flow (vph)	0	33	16	0	39	5	156	778	62	31	567	52
Turn Type	Perm		pm+ov	Perm		pm+ov	pm+pt		Perm	pm+pt		Perm
Protected Phases		4	5		8	1	5	2		1	6	
Permitted Phases	4		4	8		8	2		2	6		6
Actuated Green, G (s)		4.9	10.9		4.9	7.9	67.1	61.1	61.1	61.1	58.1	58.1
Effective Green, g (s)		7.9	16.9		7.9	13.9	73.1	64.1	64.1	67.1	61.1	61.1
Actuated g/C Ratio		0.09	0.19		0.09	0.15	0.81	0.71	0.71	0.75	0.68	0.68
Clearance Time (s)		7.0	7.0		7.0	7.0	7.0	7.0	7.0	7.0	7.0	7.0
Vehicle Extension (s)		2.0	2.0		2.0	2.0	2.0	2.0	2.0	2.0	2.0	2.0
Lane Grp Cap (vph)		116	368		120	315	716	2521	1127	565	2403	1075
v/s Ratio Prot			0.00			0.00	c0.02	c0.22		0.00	0.18	
v/s Ratio Perm		0.02	0.01		c0.03	0.00	0.16		0.04	0.04		0.03
v/c Ratio		0.28	0.04		0.33	0.02	0.22	0.31	0.05	0.05	0.24	0.05
Uniform Delay, d1		38.4	29.9		38.5	32.3	1.9	4.8	3.9	3.0	5.5	4.8
Progression Factor		1.00	1.00		1.00	1.00	1.00	1.00	1.00	1.00	1.00	1.00
Incremental Delay, d2		0.5	0.0		0.6	0.0	0.1	0.3	0.1	0.0	0.2	0.1
Delay (s)		38.9	30.0		39.1	32.3	2.0	5.1	4.0	3.0	5.8	4.9
Level of Service		D	C		D	C	A	A	A	A	A	A
Approach Delay (s)		32.4			36.0			4.5			5.5	
Approach LOS		C			D			A			A	

Intersection Summary			
HCM Average Control Delay	7.8	HCM Level of Service	A
HCM Volume to Capacity ratio	0.31		
Actuated Cycle Length (s)	90.0	Sum of lost time (s)	12.0
Intersection Capacity Utilization	42.5%	ICU Level of Service	A
Analysis Period (min)	15		

c Critical Lane Group

Movement	EBL	EBT	EBR	WBL	WBT	WBR	NBL	NBT	NBR	SBL	SBT	SBR
Lane Configurations												
Ideal Flow (vphpl)	1900	1900	1900	1900	1900	1900	1900	1900	1900	1900	1900	1900
Total Lost time (s)	3.0	3.0	3.0	3.0	3.0	3.0	3.0	3.0	3.0	3.0	3.0	3.0
Lane Util. Factor	1.00	0.95	1.00	0.97	0.95	1.00	0.97	0.95	1.00	0.97	0.95	1.00
Frt	1.00	1.00	0.85	1.00	1.00	0.85	1.00	1.00	0.85	1.00	1.00	0.85
Flt Protected	0.95	1.00	1.00	0.95	1.00	1.00	0.95	1.00	1.00	0.95	1.00	1.00
Satd. Flow (prot)	1770	3539	1583	3433	3539	1583	3433	3539	1583	3433	3539	1583
Flt Permitted	0.95	1.00	1.00	0.95	1.00	1.00	0.95	1.00	1.00	0.95	1.00	1.00
Satd. Flow (perm)	1770	3539	1583	3433	3539	1583	3433	3539	1583	3433	3539	1583
Volume (vph)	105	109	240	202	207	306	341	756	160	164	615	178
Peak-hour factor, PHF	0.95	0.95	0.95	0.95	0.95	0.95	0.95	0.95	0.95	0.95	0.95	0.95
Adj. Flow (vph)	111	115	253	213	218	322	359	796	168	173	647	187
RTOR Reduction (vph)	0	0	0	0	0	0	0	0	0	0	0	0
Lane Group Flow (vph)	111	115	253	213	218	322	359	796	168	173	647	187
Turn Type	Prot		Free	Prot		Free	Prot		Free	Prot		Free
Protected Phases	7	4		3	8		5	2		1	6	
Permitted Phases			Free			Free			Free			Free
Actuated Green, G (s)	9.7	11.9	97.3	13.9	16.1	97.3	14.9	32.7	97.3	10.8	28.6	97.3
Effective Green, g (s)	13.7	15.9	97.3	17.9	20.1	97.3	18.9	36.7	97.3	14.8	32.6	97.3
Actuated g/C Ratio	0.14	0.16	1.00	0.18	0.21	1.00	0.19	0.38	1.00	0.15	0.34	1.00
Clearance Time (s)	7.0	7.0		7.0	7.0		7.0	7.0		7.0	7.0	
Vehicle Extension (s)	3.0	3.0		3.0	3.0		3.0	5.0		3.0	5.0	
Lane Grp Cap (vph)	249	578	1583	632	731	1583	667	1335	1583	522	1186	1583
v/s Ratio Prot	c0.06	0.03		c0.06	c0.06		c0.10	c0.22		0.05	0.18	
v/s Ratio Perm			0.16			0.20			0.11			0.12
v/c Ratio	0.45	0.20	0.16	0.34	0.30	0.20	0.54	0.60	0.11	0.33	0.55	0.12
Uniform Delay, d1	38.3	35.2	0.0	34.5	32.6	0.0	35.3	24.3	0.0	36.8	26.3	0.0
Progression Factor	1.00	1.00	1.00	1.00	1.00	1.00	1.00	1.00	1.00	1.00	1.00	1.00
Incremental Delay, d2	1.3	0.2	0.2	0.3	0.2	0.3	0.8	1.1	0.1	0.4	0.9	0.2
Delay (s)	39.6	35.4	0.2	34.9	32.9	0.3	36.1	25.4	0.1	37.2	27.2	0.2
Level of Service	D	D	A	C	C	A	D	C	A	D	C	A
Approach Delay (s)		17.8			19.5			25.1			23.9	
Approach LOS		B			B			C			C	

Intersection Summary

HCM Average Control Delay	22.6	HCM Level of Service	C
HCM Volume to Capacity ratio	0.48		
Actuated Cycle Length (s)	97.3	Sum of lost time (s)	6.0
Intersection Capacity Utilization	59.2%	ICU Level of Service	B
Analysis Period (min)	15		

c Critical Lane Group

Movement	EBL	EBR	NBL	NBT	SBT	SBR
Lane Configurations						
Ideal Flow (vphpl)	1900	1900	1900	1900	1900	1900
Total Lost time (s)	4.0			4.0	4.0	
Lane Util. Factor	1.00			1.00	1.00	
Frt	0.97			1.00	1.00	
Flt Protected	0.96			1.00	1.00	
Satd. Flow (prot)	1742			1862	1857	
Flt Permitted	0.96			0.99	1.00	
Satd. Flow (perm)	1742			1845	1857	
Volume (vph)	75	19	10	1443	1030	23
Peak-hour factor, PHF	0.95	0.95	0.95	0.95	0.95	0.95
Adj. Flow (vph)	79	20	11	1519	1084	24
RTOR Reduction (vph)	7	0	0	0	1	0
Lane Group Flow (vph)	92	0	0	1530	1107	0
Turn Type			Perm			
Protected Phases	4			2	6	
Permitted Phases			2			
Actuated Green, G (s)	10.8			102.0	102.0	
Effective Green, g (s)	13.8			105.0	105.0	
Actuated g/C Ratio	0.11			0.83	0.83	
Clearance Time (s)	7.0			7.0	7.0	
Vehicle Extension (s)	2.0			3.0	3.0	
Lane Grp Cap (vph)	190			1528	1538	
v/s Ratio Prot	c0.05				0.60	
v/s Ratio Perm				c0.83		
v/c Ratio	0.48			1.00	0.72	
Uniform Delay, d1	53.1			10.9	4.6	
Progression Factor	1.00			1.00	1.00	
Incremental Delay, d2	0.7			23.3	1.7	
Delay (s)	53.9			34.2	6.3	
Level of Service	D			C	A	
Approach Delay (s)	53.9			34.2	6.3	
Approach LOS	D			C	A	

Intersection Summary

HCM Average Control Delay	23.6	HCM Level of Service	C
HCM Volume to Capacity ratio	0.94		
Actuated Cycle Length (s)	126.8	Sum of lost time (s)	8.0
Intersection Capacity Utilization	96.4%	ICU Level of Service	F
Analysis Period (min)	15		

c Critical Lane Group

Movement	EBL	EBT	EBR	WBL	WBT	WBR	NBL	NBT	NBR	SBL	SBT	SBR
Lane Configurations												
Ideal Flow (vphpl)	1900	1900	1900	1900	1900	1900	1900	1900	1900	1900	1900	1900
Total Lost time (s)	4.0	4.0	4.0	3.0	4.0	3.0	4.0	3.0	3.0	3.0	3.0	4.0
Lane Util. Factor	0.97	0.95	1.00	0.97	0.95	1.00	0.97	0.95	1.00	0.97	0.95	1.00
Frt	1.00	1.00	0.85	1.00	1.00	0.85	1.00	1.00	0.85	1.00	1.00	0.85
Flt Protected	0.95	1.00	1.00	0.95	1.00	1.00	0.95	1.00	1.00	0.95	1.00	1.00
Satd. Flow (prot)	3433	3539	1583	3433	3539	1583	3433	3539	1583	3433	3539	1583
Flt Permitted	0.95	1.00	1.00	0.95	1.00	1.00	0.95	1.00	1.00	0.95	1.00	1.00
Satd. Flow (perm)	3433	3539	1583	3433	3539	1583	3433	3539	1583	3433	3539	1583
Volume (vph)	392	430	433	223	570	85	1129	346	287	52	206	360
Peak-hour factor, PHF	0.95	0.95	0.95	0.95	0.95	0.95	0.95	0.95	0.95	0.95	0.95	0.95
Adj. Flow (vph)	413	453	456	235	600	89	1188	364	302	55	217	379
RTOR Reduction (vph)	0	0	0	0	0	0	0	0	83	0	0	0
Lane Group Flow (vph)	413	453	456	235	600	89	1188	364	219	55	217	379
Turn Type	Prot		Free	Prot		Free	Prot		pm+ov	Prot		Free
Protected Phases	1	6		5	2		7	4	5	3	8	
Permitted Phases			Free			Free			4			Free
Actuated Green, G (s)	12.1	21.0	100.0	8.1	17.0	100.0	36.0	39.4	47.5	4.0	7.4	100.0
Effective Green, g (s)	15.1	24.0	100.0	12.1	20.0	100.0	39.0	42.9	55.0	8.0	10.9	100.0
Actuated g/C Ratio	0.15	0.24	1.00	0.12	0.20	1.00	0.39	0.43	0.55	0.08	0.11	1.00
Clearance Time (s)	7.0	7.0		7.0	7.0		7.0	6.5	7.0	7.0	6.5	
Vehicle Extension (s)	2.5	4.0		2.5	4.0		2.5	2.5	2.5	2.5	2.5	
Lane Grp Cap (vph)	518	849	1583	415	708	1583	1339	1518	918	275	386	1583
v/s Ratio Prot	c0.12	0.13		0.07	c0.17		c0.35	0.10	0.03	0.02	c0.06	
v/s Ratio Perm			c0.29			0.06			0.11			0.24
v/c Ratio	0.80	0.53	0.29	0.57	0.85	0.06	0.89	0.24	0.24	0.20	0.56	0.24
Uniform Delay, d1	41.0	33.1	0.0	41.5	38.5	0.0	28.4	18.2	11.7	43.0	42.3	0.0
Progression Factor	1.00	1.00	1.00	1.00	1.00	1.00	1.00	1.00	1.00	1.00	1.00	1.00
Incremental Delay, d2	8.1	2.4	0.5	1.4	12.0	0.1	7.4	0.1	0.1	0.3	1.5	0.4
Delay (s)	49.1	35.5	0.5	42.9	50.6	0.1	35.9	18.2	11.8	43.3	43.8	0.4
Level of Service	D	D	A	D	D	A	D	B	B	D	D	A
Approach Delay (s)		27.7			43.7			28.5			18.5	
Approach LOS		C			D			C			B	

Intersection Summary			
HCM Average Control Delay	29.8	HCM Level of Service	C
HCM Volume to Capacity ratio	0.81		
Actuated Cycle Length (s)	100.0	Sum of lost time (s)	15.0
Intersection Capacity Utilization	78.2%	ICU Level of Service	D
Analysis Period (min)	15		

c Critical Lane Group

Movement	EBL	EBT	EBR	WBL	WBT	WBR	NBL	NBT	NBR	SBL	SBT	SBR
Lane Configurations												
Ideal Flow (vphpl)	1900	1900	1900	1900	1900	1900	1900	1900	1900	1900	1900	1900
Total Lost time (s)	3.0	3.0	3.0	3.0	3.0	3.0	3.0	3.0	3.0	3.0	3.0	3.0
Lane Util. Factor	0.97	1.00	1.00	1.00	0.95	1.00	0.97	0.95	1.00	1.00	0.95	1.00
Frt	1.00	1.00	0.85	1.00	1.00	0.85	1.00	1.00	0.85	1.00	1.00	0.85
Flt Protected	0.95	1.00	1.00	0.95	1.00	1.00	0.95	1.00	1.00	0.95	1.00	1.00
Satd. Flow (prot)	3433	1863	1583	1770	3539	1583	3433	3539	1583	1770	3539	1583
Flt Permitted	0.95	1.00	1.00	0.95	1.00	1.00	0.95	1.00	1.00	0.95	1.00	1.00
Satd. Flow (perm)	3433	1863	1583	1770	3539	1583	3433	3539	1583	1770	3539	1583
Volume (vph)	329	285	260	238	162	33	244	1229	298	4	874	258
Peak-hour factor, PHF	0.95	0.95	0.95	0.95	0.95	0.95	0.95	0.95	0.95	0.95	0.95	0.95
Adj. Flow (vph)	346	300	274	251	171	35	257	1294	314	4	920	272
RTOR Reduction (vph)	0	0	170	0	0	27	0	0	108	0	0	165
Lane Group Flow (vph)	346	300	104	251	171	8	257	1294	206	4	920	107
Turn Type	Prot		Perm	Prot		Perm	Prot		Perm	Prot		Perm
Protected Phases	7	4		3	8		1	6		5	2	
Permitted Phases			4			8			6			2
Actuated Green, G (s)	17.5	22.3	22.3	19.9	24.7	24.7	12.5	58.2	58.2	1.8	47.5	47.5
Effective Green, g (s)	21.5	27.3	27.3	23.9	29.7	29.7	16.5	62.7	62.7	5.8	52.0	52.0
Actuated g/C Ratio	0.16	0.21	0.21	0.18	0.23	0.23	0.13	0.48	0.48	0.04	0.39	0.39
Clearance Time (s)	7.0	8.0	8.0	7.0	8.0	8.0	7.0	7.5	7.5	7.0	7.5	7.5
Vehicle Extension (s)	3.0	3.0	3.0	3.0	3.0	3.0	3.0	3.0	3.0	3.0	3.0	3.0
Lane Grp Cap (vph)	560	386	328	321	798	357	430	1685	754	78	1397	625
v/s Ratio Prot	0.10	c0.16		c0.14	0.05		c0.07	c0.37		0.00	0.26	
v/s Ratio Perm			0.07			0.00			0.13			0.07
v/c Ratio	0.62	0.78	0.32	0.78	0.21	0.02	0.60	0.77	0.27	0.05	0.66	0.17
Uniform Delay, d1	51.3	49.3	44.3	51.4	41.5	39.7	54.5	28.5	20.8	60.3	32.6	25.9
Progression Factor	1.00	1.00	1.00	1.00	1.00	1.00	1.00	1.00	1.00	1.00	1.00	1.00
Incremental Delay, d2	2.0	9.5	0.6	11.7	0.1	0.0	2.2	2.2	0.2	0.3	1.1	0.1
Delay (s)	53.3	58.8	44.8	63.1	41.6	39.7	56.7	30.7	21.0	60.6	33.7	26.0
Level of Service	D	E	D	E	D	D	E	C	C	E	C	C
Approach Delay (s)		52.6			53.3			32.6			32.1	
Approach LOS		D			D			C			C	

Intersection Summary			
HCM Average Control Delay	38.7	HCM Level of Service	D
HCM Volume to Capacity ratio	0.75		
Actuated Cycle Length (s)	131.7	Sum of lost time (s)	12.0
Intersection Capacity Utilization	83.8%	ICU Level of Service	E
Analysis Period (min)	15		

c Critical Lane Group

Movement	EBL	EBR	NBL	NBT	SBT	SBR
Lane Configurations						
Ideal Flow (vphpl)	1900	1900	1900	1900	1900	1900
Total Lost time (s)	3.0	3.0	3.0	3.0	3.0	3.0
Lane Util. Factor	1.00	1.00	1.00	0.95	0.95	1.00
Frt	1.00	0.85	1.00	1.00	1.00	0.85
Flt Protected	0.95	1.00	0.95	1.00	1.00	1.00
Satd. Flow (prot)	1770	1583	1770	3539	3539	1583
Flt Permitted	0.95	1.00	0.09	1.00	1.00	1.00
Satd. Flow (perm)	1770	1583	176	3539	3539	1583
Volume (vph)	211	183	249	1516	1150	116
Peak-hour factor, PHF	0.95	0.95	0.95	0.95	0.95	0.95
Adj. Flow (vph)	222	193	262	1596	1211	122
RTOR Reduction (vph)	0	148	0	0	0	37
Lane Group Flow (vph)	222	45	262	1596	1211	85
Turn Type		Perm	pm+pt			pm+ov
Protected Phases	4		1	6	2	4
Permitted Phases		4	6			2
Actuated Green, G (s)	16.4	16.4	58.1	58.1	37.2	53.6
Effective Green, g (s)	20.4	20.4	61.6	61.6	40.7	61.1
Actuated g/C Ratio	0.23	0.23	0.70	0.70	0.46	0.69
Clearance Time (s)	7.0	7.0	7.0	6.5	6.5	7.0
Vehicle Extension (s)	3.0	3.0	4.0	4.0	4.0	3.0
Lane Grp Cap (vph)	410	367	447	2477	1637	1153
v/s Ratio Prot	c0.13		0.12	c0.45	c0.34	0.02
v/s Ratio Perm		0.03	0.29			0.04
v/c Ratio	0.54	0.12	0.59	0.64	0.74	0.07
Uniform Delay, d1	29.7	26.7	17.8	7.2	19.3	4.3
Progression Factor	1.00	1.00	1.00	1.00	1.00	1.00
Incremental Delay, d2	1.5	0.1	2.3	0.7	1.9	0.0
Delay (s)	31.2	26.9	20.1	7.9	21.2	4.4
Level of Service	C	C	C	A	C	A
Approach Delay (s)	29.2			9.6	19.7	
Approach LOS	C			A	B	

Intersection Summary

HCM Average Control Delay	15.6	HCM Level of Service	B
HCM Volume to Capacity ratio	0.67		
Actuated Cycle Length (s)	88.0	Sum of lost time (s)	9.0
Intersection Capacity Utilization	67.3%	ICU Level of Service	C
Analysis Period (min)	15		

c Critical Lane Group

Movement	EBL	EBT	EBR	WBL	WBT	WBR	NBL	NBT	NBR	SBL	SBT	SBR
Lane Configurations												
Ideal Flow (vphpl)	1900	1900	1900	1900	1900	1900	1900	1900	1900	1900	1900	1900
Total Lost time (s)	3.0	3.0	3.0	3.0	3.0	3.0	3.0	3.0	3.0	3.0	3.0	3.0
Lane Util. Factor	1.00	0.91	1.00	1.00	0.91	1.00	1.00	0.95	1.00	0.97	0.95	1.00
Frt	1.00	1.00	0.85	1.00	1.00	0.85	1.00	1.00	0.85	1.00	1.00	0.85
Flt Protected	0.95	1.00	1.00	0.95	1.00	1.00	0.95	1.00	1.00	0.95	1.00	1.00
Satd. Flow (prot)	1770	5085	1583	1770	5085	1583	1770	3539	1583	3433	3539	1583
Flt Permitted	0.95	1.00	1.00	0.95	1.00	1.00	0.95	1.00	1.00	0.95	1.00	1.00
Satd. Flow (perm)	1770	5085	1583	1770	5085	1583	1770	3539	1583	3433	3539	1583
Volume (vph)	226	640	194	216	1580	1098	127	549	106	607	394	156
Peak-hour factor, PHF	0.95	0.95	0.95	0.95	0.95	0.95	0.95	0.95	0.95	0.95	0.95	0.95
Adj. Flow (vph)	238	674	204	227	1663	1156	134	578	112	639	415	164
RTOR Reduction (vph)	0	0	0	0	0	0	0	0	20	0	0	52
Lane Group Flow (vph)	238	674	204	227	1663	1156	134	578	92	639	415	112
Turn Type	Prot		Free	Prot		Free	Prot		pm+ov	Prot		pm+ov
Protected Phases	1	6		5	2		3	8	5	7	4	1
Permitted Phases			Free			Free			8			4
Actuated Green, G (s)	15.6	36.6	130.0	19.5	40.5	130.0	12.5	23.4	42.9	23.0	33.9	49.5
Effective Green, g (s)	19.6	40.6	130.0	23.5	44.5	130.0	16.5	26.9	50.4	27.0	37.4	57.0
Actuated g/C Ratio	0.15	0.31	1.00	0.18	0.34	1.00	0.13	0.21	0.39	0.21	0.29	0.44
Clearance Time (s)	7.0	7.0		7.0	7.0		7.0	6.5	7.0	7.0	6.5	7.0
Vehicle Extension (s)	2.0	3.0		2.0	3.0		2.0	2.0	2.0	2.0	2.0	2.0
Lane Grp Cap (vph)	267	1588	1583	320	1741	1583	225	732	650	713	1018	731
v/s Ratio Prot	c0.13	0.13		0.13	c0.33		0.08	0.16	0.03	c0.19	0.12	0.02
v/s Ratio Perm			0.13			c0.73			0.03			0.05
v/c Ratio	0.89	0.42	0.13	0.71	0.96	0.73	0.60	0.79	0.14	0.90	0.41	0.15
Uniform Delay, d1	54.2	35.4	0.0	50.0	41.8	0.0	53.6	48.9	25.8	50.1	37.4	22.0
Progression Factor	1.00	1.00	1.00	1.00	1.00	1.00	1.00	1.00	1.00	1.00	1.00	1.00
Incremental Delay, d2	28.2	0.8	0.2	5.8	13.3	3.0	2.8	5.2	0.0	13.6	0.1	0.0
Delay (s)	82.3	36.3	0.2	55.8	55.1	3.0	56.4	54.1	25.8	63.7	37.5	22.0
Level of Service	F	D	A	E	E	A	E	D	C	E	D	C
Approach Delay (s)		39.5			35.4			50.6			49.1	
Approach LOS		D			D			D			D	

Intersection Summary

HCM Average Control Delay	40.8	HCM Level of Service	D
HCM Volume to Capacity ratio	0.87		
Actuated Cycle Length (s)	130.0	Sum of lost time (s)	6.0
Intersection Capacity Utilization	88.9%	ICU Level of Service	E
Analysis Period (min)	15		

c Critical Lane Group

HCM Signalized Intersection Capacity Analysis
19: Farmwell Road & Smith Switch Road

Kincora
Future Background 2011

Movement	EBL	EBT	EBR	WBL	WBT	WBR	NBL	NBT	NBR	SBL	SBT	SBR
Lane Configurations												
Ideal Flow (vphpl)	1900	1900	1900	1900	1900	1900	1900	1900	1900	1900	1900	1900
Total Lost time (s)	3.0	3.0	3.0	3.0	3.0	3.0	3.0	3.0	3.0	3.0	3.0	
Lane Util. Factor	1.00	0.91	1.00	1.00	0.91	1.00	1.00	0.95	1.00	1.00	0.95	
Frt	1.00	1.00	0.85	1.00	1.00	0.85	1.00	1.00	0.85	1.00	0.92	
Flt Protected	0.95	1.00	1.00	0.95	1.00	1.00	0.95	1.00	1.00	0.95	1.00	
Satd. Flow (prot)	1770	5085	1583	1770	5085	1583	1770	3539	1583	1770	3241	
Flt Permitted	0.95	1.00	1.00	0.95	1.00	1.00	0.66	1.00	1.00	0.54	1.00	
Satd. Flow (perm)	1770	5085	1583	1770	5085	1583	1237	3539	1583	1013	3241	
Volume (vph)	17	1290	45	390	2329	146	130	32	415	194	58	74
Peak-hour factor, PHF	0.95	0.95	0.95	0.95	0.95	0.95	0.95	0.95	0.95	0.95	0.95	0.95
Adj. Flow (vph)	18	1358	47	411	2452	154	137	34	437	204	61	78
RTOR Reduction (vph)	0	0	23	0	0	30	0	0	0	0	68	0
Lane Group Flow (vph)	18	1358	24	411	2452	124	137	34	437	204	71	0
Turn Type	Prot		pm+ov	Prot		pm+ov	pm+pt		Free	pm+pt		
Protected Phases	1	6	3	5	2	7	3	8		7	4	
Permitted Phases			6			2	8		Free	4		
Actuated Green, G (s)	2.8	50.4	62.7	35.5	83.1	105.1	17.4	5.1	140.0	34.1	14.8	
Effective Green, g (s)	6.8	53.9	70.2	39.5	86.6	112.6	24.9	8.6	140.0	37.6	18.3	
Actuated g/C Ratio	0.05	0.38	0.50	0.28	0.62	0.80	0.18	0.06	1.00	0.27	0.13	
Clearance Time (s)	7.0	6.5	7.0	7.0	6.5	7.0	7.0	6.5		7.0	6.5	
Vehicle Extension (s)	2.0	3.0	2.0	2.0	3.0	2.0	2.0	2.0		2.0	2.0	
Lane Grp Cap (vph)	86	1958	828	499	3145	1307	282	217	1583	413	424	
v/s Ratio Prot	0.01	0.27	0.00	c0.23	c0.48	0.02	0.06	0.01		c0.09	0.02	
v/s Ratio Perm			0.01			0.06	0.03		0.28	c0.04		
v/c Ratio	0.21	0.69	0.03	0.82	0.78	0.09	0.49	0.16	0.28	0.49	0.17	
Uniform Delay, d1	64.0	36.1	17.7	47.0	19.7	2.9	51.3	62.3	0.0	42.4	54.1	
Progression Factor	1.00	1.00	1.00	1.00	1.00	1.00	1.00	1.00	1.00	1.00	1.00	
Incremental Delay, d2	0.4	2.1	0.0	10.1	2.0	0.0	0.5	0.1	0.4	0.3	0.9	
Delay (s)	64.5	38.2	17.7	57.1	21.7	2.9	51.8	62.4	0.4	42.7	54.9	
Level of Service	E	D	B	E	C	A	D	E	A	D	D	
Approach Delay (s)		37.8			25.5			15.5			47.7	
Approach LOS		D			C			B			D	

Intersection Summary			
HCM Average Control Delay	29.0	HCM Level of Service	C
HCM Volume to Capacity ratio	0.71		
Actuated Cycle Length (s)	140.0	Sum of lost time (s)	6.0
Intersection Capacity Utilization	80.7%	ICU Level of Service	D
Analysis Period (min)	15		

c Critical Lane Group

HCM Signalized Intersection Capacity Analysis
21: Waxpool Road & Nokes Blvd

Kincora
Future Background 2011

Movement	EBL	EBT	EBR	WBL	WBT	WBR	NBL	NBT	NBR	SBL	SBT	SBR
Lane Configurations												
Ideal Flow (vphpl)	1900	1900	1900	1900	1900	1900	1900	1900	1900	1900	1900	1900
Total Lost time (s)	3.0	3.0	3.0	3.0	3.0	3.0	3.0	3.0	3.0	3.0	3.0	3.0
Lane Util. Factor	0.97	0.86	1.00	0.97	0.86	1.00	0.97	0.95	1.00	0.97	0.95	1.00
Frt	1.00	1.00	0.85	1.00	1.00	0.85	1.00	1.00	0.85	1.00	1.00	0.85
Flt Protected	0.95	1.00	1.00	0.95	1.00	1.00	0.95	1.00	1.00	0.95	1.00	1.00
Satd. Flow (prot)	3433	6408	1583	3433	6408	1583	3433	3539	1583	3433	3539	1583
Flt Permitted	0.95	1.00	1.00	0.95	1.00	1.00	0.95	1.00	1.00	0.95	1.00	1.00
Satd. Flow (perm)	3433	6408	1583	3433	6408	1583	3433	3539	1583	3433	3539	1583
Volume (vph)	169	2265	94	72	3919	337	343	40	680	304	22	272
Peak-hour factor, PHF	0.95	0.95	0.95	0.95	0.95	0.95	0.95	0.95	0.95	0.95	0.95	0.95
Adj. Flow (vph)	178	2384	99	76	4125	355	361	42	716	320	23	286
RTOR Reduction (vph)	0	0	34	0	0	0	0	0	0	0	0	0
Lane Group Flow (vph)	178	2384	65	76	4125	355	361	42	716	320	23	286
Turn Type	Prot		Perm	Prot		Free	Prot		Free	Prot		Free
Protected Phases	1	6		5	2		7	4		3	8	
Permitted Phases			6			Free			Free			Free
Actuated Green, G (s)	5.8	91.7	91.7	5.1	91.0	145.0	16.6	6.2	145.0	14.0	3.6	145.0
Effective Green, g (s)	9.8	95.7	95.7	9.1	95.0	145.0	20.6	10.2	145.0	18.0	7.6	145.0
Actuated g/C Ratio	0.07	0.66	0.66	0.06	0.66	1.00	0.14	0.07	1.00	0.12	0.05	1.00
Clearance Time (s)	7.0	7.0	7.0	7.0	7.0		7.0	7.0		7.0	7.0	
Vehicle Extension (s)	2.0	3.0	3.0	2.0	3.0		3.0	3.0		3.0	3.0	
Lane Grp Cap (vph)	232	4229	1045	215	4198	1583	488	249	1583	426	185	1583
v/s Ratio Prot	c0.05	0.37		0.02	c0.64		c0.11	0.01			0.09	0.01	
v/s Ratio Perm			0.04			0.22			c0.45			0.18
v/c Ratio	0.77	0.56	0.06	0.35	0.98	0.22	0.74	0.17	0.45	0.75	0.12	0.18
Uniform Delay, d1	66.5	13.3	8.7	65.1	24.2	0.0	59.6	63.4	0.0	61.3	65.5	0.0
Progression Factor	1.00	1.00	1.00	1.00	1.00	1.00	1.00	1.00	1.00	1.00	1.00	1.00
Incremental Delay, d2	12.8	0.5	0.1	0.4	10.4	0.3	5.8	0.3	0.9	7.3	0.3	0.3
Delay (s)	79.2	13.9	8.9	65.5	34.6	0.3	65.4	63.7	0.9	68.6	65.8	0.3
Level of Service	E	B	A	E	C	A	E	E	A	E	E	A
Approach Delay (s)		18.1			32.4			24.1			37.4	
Approach LOS		B			C			C			D	

Intersection Summary			
HCM Average Control Delay	27.5	HCM Level of Service	C
HCM Volume to Capacity ratio	0.89		
Actuated Cycle Length (s)	145.0	Sum of lost time (s)	9.0
Intersection Capacity Utilization	88.1%	ICU Level of Service	E
Analysis Period (min)	15		

c Critical Lane Group

Movement	EBL	EBT	EBR	WBL	WBT	WBR	NBL	NBT	NBR	SBL	SBT	SBR
Lane Configurations												
Ideal Flow (vphpl)	1900	1900	1900	1900	1900	1900	1900	1900	1900	1900	1900	1900
Total Lost time (s)		3.0		3.0	3.0			3.0	3.0		3.0	
Lane Util. Factor		0.95		1.00	0.95			1.00	1.00		1.00	
Frt		0.99		1.00	1.00			1.00	0.85		0.94	
Flt Protected		1.00		0.95	1.00			0.95	1.00		0.98	
Satd. Flow (prot)		3498		1770	3539			1775	1583		1724	
Flt Permitted		0.92		0.06	1.00			0.95	1.00		0.98	
Satd. Flow (perm)		3234		117	3539			1775	1583		1724	
Volume (vph)	25	1577	125	165	1010	0	180	2	262	7	3	7
Peak-hour factor, PHF	0.95	0.95	0.95	0.95	0.95	0.95	0.95	0.95	0.95	0.95	0.95	0.95
Adj. Flow (vph)	26	1660	132	174	1063	0	189	2	276	7	3	7
RTOR Reduction (vph)	0	3	0	0	0	0	0	0	0	0	7	0
Lane Group Flow (vph)	0	1815	0	174	1063	0	0	191	276	0	10	0
Turn Type	Perm			pm+pt			Split		pm+ov	Split		
Protected Phases		6		5	2		4	4	5	8	8	
Permitted Phases	6			2					4			
Actuated Green, G (s)		57.7		68.8	68.8			15.7	21.3		2.7	
Effective Green, g (s)		60.7		71.8	71.8			18.7	26.8		5.7	
Actuated g/C Ratio		0.58		0.68	0.68			0.18	0.25		0.05	
Clearance Time (s)		6.0		5.5	6.0			6.0	5.5		6.0	
Vehicle Extension (s)		4.0		2.0	4.0			3.0	2.0		3.0	
Lane Grp Cap (vph)		1866		207	2415			316	403		93	
v/s Ratio Prot				c0.06	0.30			0.11	c0.05		c0.01	
v/s Ratio Perm		c0.56		0.51					0.12			
v/c Ratio		0.97		0.84	0.44			0.60	0.68		0.11	
Uniform Delay, d1		21.4		30.1	7.6			39.8	35.4		47.3	
Progression Factor		1.00		1.00	1.00			1.00	1.00		1.00	
Incremental Delay, d2		14.8		24.4	0.2			3.2	3.8		0.5	
Delay (s)		36.3		54.4	7.8			43.1	39.2		47.9	
Level of Service		D		D	A			D	D		D	
Approach Delay (s)		36.3			14.3			40.8			47.9	
Approach LOS		D			B			D			D	

Intersection Summary

HCM Average Control Delay	29.3	HCM Level of Service	C
HCM Volume to Capacity ratio	0.85		
Actuated Cycle Length (s)	105.2	Sum of lost time (s)	12.0
Intersection Capacity Utilization	103.0%	ICU Level of Service	G
Analysis Period (min)	15		

c Critical Lane Group

Movement	EBL	EBT	WBT	WBR	SBL	SBR
Lane Configurations						
Ideal Flow (vphpl)	1900	1900	1900	1900	1900	1900
Total Lost time (s)	3.0	3.0	3.0	3.0	3.0	3.0
Lane Util. Factor	0.97	0.95	0.91	0.91	0.97	1.00
Frt	1.00	1.00	0.98	0.85	1.00	0.85
Flt Protected	0.95	1.00	1.00	1.00	0.95	1.00
Satd. Flow (prot)	3433	3539	3333	1441	3433	1583
Flt Permitted	0.95	1.00	1.00	1.00	0.95	1.00
Satd. Flow (perm)	3433	3539	3333	1441	3433	1583
Volume (vph)	1088	524	520	751	623	718
Peak-hour factor, PHF	0.95	0.95	0.95	0.95	0.95	0.95
Adj. Flow (vph)	1145	552	547	791	656	756
RTOR Reduction (vph)	0	0	6	7	0	481
Lane Group Flow (vph)	1145	552	611	714	656	275
Turn Type	Prot			pm+ov		Perm
Protected Phases	5	2	6	4	4	
Permitted Phases				6		4
Actuated Green, G (s)	45.4	78.4	26.0	65.6	39.6	39.6
Effective Green, g (s)	49.4	82.4	30.0	74.1	44.1	44.1
Actuated g/C Ratio	0.37	0.62	0.23	0.56	0.33	0.33
Clearance Time (s)	7.0	7.0	7.0	7.5	7.5	7.5
Vehicle Extension (s)	2.0	3.0	3.0	3.0	3.0	3.0
Lane Grp Cap (vph)	1280	2201	755	838	1143	527
v/s Ratio Prot	c0.33	0.16	0.18	c0.28	0.19	
v/s Ratio Perm				0.21		0.17
v/c Ratio	0.89	0.25	0.81	0.85	0.57	0.52
Uniform Delay, d1	39.1	11.2	48.5	24.8	36.5	35.7
Progression Factor	1.00	1.00	1.00	1.00	1.00	1.00
Incremental Delay, d2	8.2	0.1	6.4	8.3	0.7	0.9
Delay (s)	47.3	11.3	54.9	32.9	37.2	36.6
Level of Service	D	B	D	C	D	D
Approach Delay (s)		35.6	43.1		36.9	
Approach LOS		D	D		D	

Intersection Summary

HCM Average Control Delay	38.2	HCM Level of Service	D
HCM Volume to Capacity ratio	0.87		
Actuated Cycle Length (s)	132.5	Sum of lost time (s)	6.0
Intersection Capacity Utilization	81.2%	ICU Level of Service	D
Analysis Period (min)	15		

c Critical Lane Group

Movement	EBL	EBT	EBR	WBL	WBT	WBR	NBL	NBT	NBR	SBL	SBT	SBR
Lane Configurations												
Ideal Flow (vphpl)	1900	1900	1900	1900	1900	1900	1900	1900	1900	1900	1900	1900
Total Lost time (s)		4.0	4.0	4.0		4.0	4.0	4.0	4.0	4.0	4.0	4.0
Lane Util. Factor		1.00	1.00	1.00		1.00	1.00	0.95	1.00	1.00	0.95	1.00
Frt		1.00	0.85	1.00		0.85	1.00	1.00	0.85	1.00	1.00	0.85
Flt Protected		0.95	1.00	0.95		1.00	0.95	1.00	1.00	0.95	1.00	1.00
Satd. Flow (prot)		1770	1583	1770		1583	1770	3539	1583	1770	3539	1583
Flt Permitted		0.76	1.00	0.41		1.00	0.95	1.00	1.00	0.95	1.00	1.00
Satd. Flow (perm)		1410	1583	761		1583	1770	3539	1583	1770	3539	1583
Volume (vph)	226	0	181	56	0	168	139	1230	12	35	868	147
Peak-hour factor, PHF	0.95	0.95	0.95	0.95	0.95	0.95	0.95	0.95	0.95	0.95	0.95	0.95
Adj. Flow (vph)	238	0	191	59	0	177	146	1295	13	37	914	155
RTOR Reduction (vph)	0	0	150	0	0	139	0	0	4	0	0	66
Lane Group Flow (vph)	0	238	41	59	0	38	146	1295	9	37	914	89
Turn Type	Perm		Perm	Perm		Perm	Prot		Perm	Prot		Perm
Protected Phases		4			8		5	2		1	6	
Permitted Phases	4		4	8		8			2			6
Actuated Green, G (s)		15.1	15.1	15.1		15.1	9.2	43.7	43.7	3.9	38.4	38.4
Effective Green, g (s)		18.1	18.1	18.1		18.1	12.2	46.7	46.7	6.9	41.4	41.4
Actuated g/C Ratio		0.22	0.22	0.22		0.22	0.15	0.56	0.56	0.08	0.49	0.49
Clearance Time (s)		7.0	7.0	7.0		7.0	7.0	7.0	7.0	7.0	7.0	7.0
Vehicle Extension (s)		2.0	2.0	2.0		2.0	2.0	2.0	2.0	2.0	2.0	2.0
Lane Grp Cap (vph)		305	342	165		342	258	1975	883	146	1750	783
v/s Ratio Prot							c0.08	c0.37		0.02	0.26	
v/s Ratio Perm		c0.17	0.03	0.08		0.02			0.01			0.06
v/c Ratio		0.78	0.12	0.36		0.11	0.57	0.66	0.01	0.25	0.52	0.11
Uniform Delay, d1		30.9	26.4	27.9		26.3	33.3	12.9	8.2	36.0	14.4	11.3
Progression Factor		1.00	1.00	1.00		1.00	1.00	1.00	1.00	1.00	1.00	1.00
Incremental Delay, d2		11.3	0.1	0.5		0.1	1.7	0.6	0.0	0.3	0.1	0.0
Delay (s)		42.2	26.5	28.3		26.4	35.0	13.5	8.2	36.3	14.5	11.4
Level of Service		D	C	C		C	C	B	A	D	B	B
Approach Delay (s)		35.2			26.9			15.6			14.8	
Approach LOS		D			C			B			B	

Intersection Summary				
HCM Average Control Delay	18.8	HCM Level of Service	B	
HCM Volume to Capacity ratio	0.66			
Actuated Cycle Length (s)	83.7	Sum of lost time (s)	8.0	
Intersection Capacity Utilization	69.0%	ICU Level of Service	C	
Analysis Period (min)	15			

c Critical Lane Group

Movement	EBL	EBT	WBT	WBR	SWL	SWR
Lane Configurations						
Sign Control		Free	Free		Stop	
Grade		0%	0%		0%	
Volume (veh/h)	0	1012	47	0	0	10
Peak Hour Factor	0.92	0.92	0.92	0.92	0.92	0.92
Hourly flow rate (vph)	0	1100	51	0	0	11
Pedestrians						
Lane Width (ft)						
Walking Speed (ft/s)						
Percent Blockage						
Right turn flare (veh)						
Median type					None	
Median storage veh)						
Upstream signal (ft)						
pX, platoon unblocked						
vC, conflicting volume	51				601	26
vC1, stage 1 conf vol						
vC2, stage 2 conf vol						
vCu, unblocked vol	51				601	26
tC, single (s)	4.1				6.8	6.9
tC, 2 stage (s)						
tF (s)	2.2				3.5	3.3
p0 queue free %	100				100	99
cM capacity (veh/h)	1553				432	1044

Direction, Lane #	EB 1	EB 2	WB 1	WB 2	SW 1
Volume Total	550	550	26	26	11
Volume Left	0	0	0	0	0
Volume Right	0	0	0	0	11
cSH	1700	1700	1700	1700	1044
Volume to Capacity	0.32	0.32	0.02	0.02	0.01
Queue Length 95th (ft)	0	0	0	0	1
Control Delay (s)	0.0	0.0	0.0	0.0	8.5
Lane LOS					A
Approach Delay (s)	0.0		0.0		8.5
Approach LOS					A

Intersection Summary				
Average Delay	0.1			
Intersection Capacity Utilization	31.3%	ICU Level of Service	A	
Analysis Period (min)	15			

Movement	EBL	EBR	NBL	NBT	SBT	SBR
Lane Configurations						
Ideal Flow (vphpl)	1900	1900	1900	1900	1900	1900
Total Lost time (s)	4.0			4.0	4.0	
Lane Util. Factor	1.00			1.00	1.00	
Frt	0.95			1.00	1.00	
Flt Protected	0.97			1.00	1.00	
Satd. Flow (prot)	1718			1861	1861	
Flt Permitted	0.97			0.99	1.00	
Satd. Flow (perm)	1718			1841	1861	
Volume (vph)	9	5	11	591	527	4
Peak-hour factor, PHF	0.95	0.95	0.95	0.95	0.95	0.95
Adj. Flow (vph)	9	5	12	622	555	4
RTOR Reduction (vph)	5	0	0	0	0	0
Lane Group Flow (vph)	9	0	0	634	559	0
Turn Type			Perm			
Protected Phases	4			2	6	
Permitted Phases			2			
Actuated Green, G (s)	3.2			99.6	99.6	
Effective Green, g (s)	6.2			102.6	102.6	
Actuated g/C Ratio	0.05			0.88	0.88	
Clearance Time (s)	7.0			7.0	7.0	
Vehicle Extension (s)	2.0			3.0	3.0	
Lane Grp Cap (vph)	91			1617	1635	
v/s Ratio Prot	c0.01				0.30	
v/s Ratio Perm				c0.34		
v/c Ratio	0.10			0.39	0.34	
Uniform Delay, d1	52.6			1.3	1.2	
Progression Factor	1.00			1.00	1.00	
Incremental Delay, d2	0.2			0.2	0.1	
Delay (s)	52.8			1.5	1.4	
Level of Service	D			A	A	
Approach Delay (s)	52.8			1.5	1.4	
Approach LOS	D			A	A	

Intersection Summary

HCM Average Control Delay	2.0	HCM Level of Service	A
HCM Volume to Capacity ratio	0.38		
Actuated Cycle Length (s)	116.8	Sum of lost time (s)	8.0
Intersection Capacity Utilization	52.4%	ICU Level of Service	A
Analysis Period (min)	15		

c Critical Lane Group

Movement	EBL	EBT	EBR	WBL	WBT	WBR	NBL	NBT	NBR	SBL	SBT	SBR
Lane Configurations												
Ideal Flow (vphpl)	1900	1900	1900	1900	1900	1900	1900	1900	1900	1900	1900	1900
Total Lost time (s)	3.0	3.0	3.0	3.0	3.0	3.0	3.0	3.0	3.0	3.0	3.0	3.0
Lane Util. Factor	0.97	0.86	1.00	0.97	0.86	1.00	0.97	0.95	1.00	0.97	0.95	1.00
Frt	1.00	1.00	0.85	1.00	1.00	0.85	1.00	1.00	0.85	1.00	1.00	0.85
Flt Protected	0.95	1.00	1.00	0.95	1.00	1.00	0.95	1.00	1.00	0.95	1.00	1.00
Satd. Flow (prot)	3433	6408	1583	3433	6408	1583	3433	3539	1583	3433	3539	1583
Flt Permitted	0.95	1.00	1.00	0.95	1.00	1.00	0.95	1.00	1.00	0.95	1.00	1.00
Satd. Flow (perm)	3433	6408	1583	3433	6408	1583	3433	3539	1583	3433	3539	1583
Volume (vph)	451	1708	40	20	1358	847	48	49	42	673	41	601
Peak-hour factor, PHF	0.95	0.95	0.95	0.95	0.95	0.95	0.95	0.95	0.95	0.95	0.95	0.95
Adj. Flow (vph)	475	1798	42	21	1429	892	51	52	44	708	43	633
RTOR Reduction (vph)	0	0	21	0	0	0	0	0	0	0	0	0
Lane Group Flow (vph)	475	1798	21	21	1429	892	51	52	44	708	43	633
Turn Type	Prot		Perm	Prot		Free	Prot		Free	Prot		Free
Protected Phases	1	6		5	2		7	4		3	8	
Permitted Phases			6			Free			Free			Free
Actuated Green, G (s)	15.6	68.4	68.4	3.0	55.8	145.0	6.5	4.8	145.0	40.8	39.1	145.0
Effective Green, g (s)	19.6	72.4	72.4	7.0	59.8	145.0	10.5	8.8	145.0	44.8	43.1	145.0
Actuated g/C Ratio	0.14	0.50	0.50	0.05	0.41	1.00	0.07	0.06	1.00	0.31	0.30	1.00
Clearance Time (s)	7.0	7.0	7.0	7.0	7.0		7.0	7.0		7.0	7.0	
Vehicle Extension (s)	2.0	3.0	3.0	2.0	3.0		3.0	3.0		3.0	3.0	
Lane Grp Cap (vph)	464	3200	790	166	2643	1583	249	215	1583	1061	1052	1583
v/s Ratio Prot	c0.14	0.28		0.01	0.22		0.01	0.01		c0.21	0.01	
v/s Ratio Perm			0.01			c0.56			0.03			0.40
v/c Ratio	1.02	0.56	0.03	0.13	0.54	0.56	0.20	0.24	0.03	0.67	0.04	0.40
Uniform Delay, d1	62.7	25.3	18.4	66.1	32.2	0.0	63.3	64.9	0.0	43.6	36.2	0.0
Progression Factor	1.00	1.00	1.00	1.00	1.00	1.00	1.00	1.00	1.00	1.00	1.00	1.00
Incremental Delay, d2	47.9	0.7	0.1	0.1	0.8	1.5	0.4	0.6	0.0	1.6	0.0	0.8
Delay (s)	110.6	26.0	18.5	66.2	33.0	1.5	63.7	65.5	0.0	45.2	36.3	0.8
Level of Service	F	C	B	E	C	A	E	E	A	D	D	A
Approach Delay (s)		43.2			21.3			45.3			24.6	
Approach LOS		D			C			D			C	

Intersection Summary

HCM Average Control Delay	30.8	HCM Level of Service	C
HCM Volume to Capacity ratio	0.65		
Actuated Cycle Length (s)	145.0	Sum of lost time (s)	3.0
Intersection Capacity Utilization	68.4%	ICU Level of Service	C
Analysis Period (min)	15		

c Critical Lane Group

APPENDIX D-3

INTERSECTION CAPACITY ANALYSIS RESULTS – INTERIM BUILD-OUT YEAR (2011) CONDITIONS WITH DEVELOPMENT

HCM Signalized Intersection Capacity Analysis
5: Route 7 & Countryside Blvd.

Kincora
Total Future (2011)

Movement	EBL	EBT	EBR	WBL	WBT	WBR	NBL	NBT	NBR	SBL	SBT	SBR
Lane Configurations												
Ideal Flow (vphpl)	1900	1900	1900	1900	1900	1900	1900	1900	1900	1900	1900	1900
Total Lost time (s)	3.0	3.0	3.0	3.0	3.0	3.0	3.0	3.0	3.0	3.0	3.0	3.0
Lane Util. Factor	0.97	0.86	1.00	0.97	0.86	1.00	0.97	0.95	1.00	0.97	0.95	1.00
Frt	1.00	1.00	0.85	1.00	1.00	0.85	1.00	1.00	0.85	1.00	1.00	0.85
Flt Protected	0.95	1.00	1.00	0.95	1.00	1.00	0.95	1.00	1.00	0.95	1.00	1.00
Satd. Flow (prot)	3433	6408	1583	3433	6408	1583	3433	3539	1583	3433	3539	1583
Flt Permitted	0.95	1.00	1.00	0.95	1.00	1.00	0.95	1.00	1.00	0.95	1.00	1.00
Satd. Flow (perm)	3433	6408	1583	3433	6408	1583	3433	3539	1583	3433	3539	1583
Volume (vph)	291	3009	99	101	1592	108	74	70	147	165	94	262
Peak-hour factor, PHF	0.95	0.95	0.95	0.95	0.95	0.95	0.95	0.95	0.95	0.95	0.95	0.95
Adj. Flow (vph)	306	3167	104	106	1676	114	78	74	155	174	99	276
RTOR Reduction (vph)	0	0	0	0	0	40	0	0	0	0	0	50
Lane Group Flow (vph)	306	3167	104	106	1676	74	78	74	155	174	99	226
Turn Type	Prot		Free	Prot		pm+ov	Prot		Free	Prot		pm+ov
Protected Phases	1	6		5	2	3	7	4		3	8	1
Permitted Phases			Free			2			Free			8
Actuated Green, G (s)	16.6	84.7	150.0	9.9	78.0	90.0	8.0	15.4	150.0	12.0	19.4	36.0
Effective Green, g (s)	20.6	88.7	150.0	13.9	82.0	98.0	12.0	19.4	150.0	16.0	23.4	44.0
Actuated g/C Ratio	0.14	0.59	1.00	0.09	0.55	0.65	0.08	0.13	1.00	0.11	0.16	0.29
Clearance Time (s)	7.0	7.0		7.0	7.0	7.0	7.0	7.0		7.0	7.0	7.0
Vehicle Extension (s)	2.0	2.0		3.0	2.0	2.0	2.0	2.0		2.0	2.0	2.0
Lane Grp Cap (vph)	471	3789	1583	318	3503	1066	275	458	1583	366	552	496
v/s Ratio Prot	c0.09	c0.49		0.03	0.26	0.01	0.02	0.02		c0.05	0.03	c0.06
v/s Ratio Perm			0.07			0.04			0.10			0.08
v/c Ratio	0.65	0.84	0.07	0.33	0.48	0.07	0.28	0.16	0.10	0.48	0.18	0.46
Uniform Delay, d1	61.3	24.8	0.0	63.7	20.9	9.4	65.0	58.1	0.0	63.1	55.0	43.2
Progression Factor	1.00	1.00	1.00	1.00	1.00	1.00	1.00	1.00	1.00	1.00	1.00	1.00
Incremental Delay, d2	2.3	2.3	0.1	0.6	0.5	0.0	0.2	0.1	0.1	0.4	0.1	0.2
Delay (s)	63.6	27.1	0.1	64.3	21.3	9.5	65.2	58.1	0.1	63.4	55.0	43.5
Level of Service	E	C	A	E	C	A	E	E	A	E	E	D
Approach Delay (s)		29.4			23.0			30.6			51.9	
Approach LOS		C			C			C			D	

Intersection Summary				
HCM Average Control Delay	29.5	HCM Level of Service	C	
HCM Volume to Capacity ratio	0.71			
Actuated Cycle Length (s)	150.0	Sum of lost time (s)	6.0	
Intersection Capacity Utilization	70.0%	ICU Level of Service	C	
Analysis Period (min)	15			

c Critical Lane Group

HCM Signalized Intersection Capacity Analysis
6: Route 7 & Palisade Parkway

Kincora
Total Future (2011)

Movement	EBL	EBT	EBR	WBL	WBT	WBR	NBL	NBT	NBR	SBL	SBT	SBR
Lane Configurations												
Ideal Flow (vphpl)	1900	1900	1900	1900	1900	1900	1900	1900	1900	1900	1900	1900
Total Lost time (s)	3.0	3.0	3.0	3.0	3.0	3.0	3.0	3.0	3.0	3.0	3.0	3.0
Lane Util. Factor	0.97	0.86	1.00	1.00	0.86	1.00	0.97	1.00	1.00	0.97	1.00	1.00
Frt	1.00	1.00	0.85	1.00	1.00	0.85	1.00	1.00	0.85	1.00	1.00	0.85
Flt Protected	0.95	1.00	1.00	0.95	1.00	1.00	0.95	1.00	1.00	0.95	1.00	1.00
Satd. Flow (prot)	3433	6408	1583	1770	6408	1583	3433	1863	1583	3433	1863	1583
Flt Permitted	0.95	1.00	1.00	0.95	1.00	1.00	0.95	1.00	1.00	0.95	1.00	1.00
Satd. Flow (perm)	3433	6408	1583	1770	6408	1583	3433	1863	1583	3433	1863	1583
Volume (vph)	162	2738	381	123	1521	73	58	34	42	131	82	208
Peak-hour factor, PHF	0.95	0.95	0.95	0.95	0.95	0.95	0.95	0.95	0.95	0.95	0.95	0.95
Adj. Flow (vph)	171	2882	401	129	1601	77	61	36	44	138	86	219
RTOR Reduction (vph)	0	0	0	0	0	0	0	0	23	0	0	51
Lane Group Flow (vph)	171	2882	401	129	1601	77	61	36	21	138	86	168
Turn Type	Prot		Free	Prot		Free	Split		pm+ov	Split		pm+ov
Protected Phases	1	6		5	2		4	4	5	3	3	1
Permitted Phases			Free			Free			4			3
Actuated Green, G (s)	11.0	77.1	135.0	13.6	79.7	135.0	6.2	6.2	19.8	10.1	10.1	21.1
Effective Green, g (s)	15.0	81.1	135.0	17.6	83.7	135.0	10.2	10.2	27.8	14.1	14.1	29.1
Actuated g/C Ratio	0.11	0.60	1.00	0.13	0.62	1.00	0.08	0.08	0.21	0.10	0.10	0.22
Clearance Time (s)	7.0	7.0		7.0	7.0		7.0	7.0	7.0	7.0	7.0	7.0
Vehicle Extension (s)	2.0	4.0		2.0	4.0		3.0	3.0	2.0	3.0	3.0	2.0
Lane Grp Cap (vph)	381	3850	1583	231	3973	1583	259	141	361	359	195	341
v/s Ratio Prot	0.05	c0.45		c0.07	0.25		0.02	0.02	0.01	0.04	0.05	c0.05
v/s Ratio Perm			c0.25			0.05			0.01			0.05
v/c Ratio	0.45	0.75	0.25	0.56	0.40	0.05	0.24	0.26	0.06	0.38	0.44	0.49
Uniform Delay, d1	56.1	19.6	0.0	55.1	13.0	0.0	58.7	58.8	43.1	56.4	56.8	46.5
Progression Factor	1.00	1.00	1.00	1.00	1.00	1.00	1.00	1.00	1.00	1.00	1.00	1.00
Incremental Delay, d2	0.3	1.4	0.4	1.7	0.3	0.1	0.5	1.0	0.0	0.7	1.6	0.4
Delay (s)	56.4	20.9	0.4	56.7	13.3	0.1	59.2	59.8	43.1	57.1	58.3	46.9
Level of Service	E	C	A	E	B	A	E	E	D	E	E	D
Approach Delay (s)		20.3			15.8			54.3			52.3	
Approach LOS		C			B			D			D	

Intersection Summary				
HCM Average Control Delay	22.2	HCM Level of Service	C	
HCM Volume to Capacity ratio	0.64			
Actuated Cycle Length (s)	135.0	Sum of lost time (s)	9.0	
Intersection Capacity Utilization	66.9%	ICU Level of Service	C	
Analysis Period (min)	15			

c Critical Lane Group

Movement	WBL	WBR	NBT	NBR	SBL	SBT
Lane Configurations						
Ideal Flow (vphpl)	1900	1900	1900	1900	1900	1900
Total Lost time (s)	3.0	3.0	3.0		3.0	3.0
Lane Util. Factor	1.00	1.00	0.95		1.00	0.95
Frt	1.00	0.85	0.97		1.00	1.00
Flt Protected	0.95	1.00	1.00		0.95	1.00
Satd. Flow (prot)	1770	1583	3440		1770	3539
Flt Permitted	0.95	1.00	1.00		0.44	1.00
Satd. Flow (perm)	1770	1583	3440		825	3539
Volume (vph)	89	191	304	70	159	561
Peak-hour factor, PHF	0.95	0.95	0.95	0.95	0.95	0.95
Adj. Flow (vph)	94	201	320	74	167	591
RTOR Reduction (vph)	0	123	17	0	0	0
Lane Group Flow (vph)	94	78	377	0	167	591
Turn Type		pm+ov			pm+pt	
Protected Phases	4	1	2		1	6
Permitted Phases		4			6	
Actuated Green, G (s)	4.9	12.4	18.5		33.0	33.0
Effective Green, g (s)	8.9	20.4	23.0		37.5	37.5
Actuated g/C Ratio	0.17	0.39	0.44		0.72	0.72
Clearance Time (s)	7.0	7.0	7.5		7.0	7.5
Vehicle Extension (s)	2.0	2.0	2.0		2.0	2.0
Lane Grp Cap (vph)	301	707	1510		798	2533
v/s Ratio Prot	c0.05	0.02	0.11		0.05	c0.17
v/s Ratio Perm		0.03			0.10	
v/c Ratio	0.31	0.11	0.25		0.21	0.23
Uniform Delay, d1	19.1	10.2	9.3		2.5	2.5
Progression Factor	1.00	1.00	1.00		1.00	1.00
Incremental Delay, d2	0.2	0.0	0.0		0.0	0.0
Delay (s)	19.3	10.2	9.3		2.6	2.6
Level of Service	B	B	A		A	A
Approach Delay (s)	13.1		9.3			2.6
Approach LOS	B		A			A

Intersection Summary

HCM Average Control Delay	6.5	HCM Level of Service	A
HCM Volume to Capacity ratio	0.25		
Actuated Cycle Length (s)	52.4	Sum of lost time (s)	6.0
Intersection Capacity Utilization	37.1%	ICU Level of Service	A
Analysis Period (min)	15		

c Critical Lane Group

Movement	EBL	EBT	EBR	WBL	WBT	WBR	NBL	NBT	NBR	SBL	SBT	SBR
Lane Configurations												
Ideal Flow (vphpl)	1900	1900	1900	1900	1900	1900	1900	1900	1900	1900	1900	1900
Total Lost time (s)		4.0	4.0		4.0	4.0	4.0	4.0	4.0	4.0	4.0	4.0
Lane Util. Factor		1.00	1.00		1.00	1.00	1.00	0.95	1.00	1.00	0.95	1.00
Frt		1.00	0.85		1.00	0.85	1.00	1.00	0.85	1.00	1.00	0.85
Flt Protected		0.95	1.00		0.96	1.00	0.95	1.00	1.00	0.95	1.00	1.00
Satd. Flow (prot)		1778	1583		1783	1583	1770	3539	1583	1770	3539	1583
Flt Permitted		0.67	1.00		0.72	1.00	0.33	1.00	1.00	0.58	1.00	1.00
Satd. Flow (perm)		1257	1583		1335	1583	622	3539	1583	1075	3539	1583
Volume (vph)	41	2	145	71	9	38	35	271	15	9	695	39
Peak-hour factor, PHF	0.95	0.95	0.95	0.95	0.95	0.95	0.95	0.95	0.95	0.95	0.95	0.95
Adj. Flow (vph)	43	2	153	75	9	40	37	285	16	9	732	41
RTOR Reduction (vph)	0	0	132	0	0	35	0	0	5	0	0	14
Lane Group Flow (vph)	0	45	21	0	84	5	37	285	11	9	732	27
Turn Type	Perm		Perm	Perm		Perm	pm+pt		Perm	pm+pt		Perm
Protected Phases		4			8		5	2		1	6	
Permitted Phases	4		4	8		8	2		2	6		6
Actuated Green, G (s)		9.3	9.3		9.3	9.3	61.9	58.7	58.7	57.5	56.5	56.5
Effective Green, g (s)		12.3	12.3		12.3	12.3	67.9	61.7	61.7	63.5	59.5	59.5
Actuated g/C Ratio		0.14	0.14		0.14	0.14	0.75	0.69	0.69	0.71	0.66	0.66
Clearance Time (s)		7.0	7.0		7.0	7.0	7.0	7.0	7.0	7.0	7.0	7.0
Vehicle Extension (s)		2.0	2.0		2.0	2.0	2.0	2.0	2.0	2.0	2.0	2.0
Lane Grp Cap (vph)		172	216		182	216	548	2426	1085	789	2340	1047
v/s Ratio Prot							c0.00	0.08		0.00	c0.21	
v/s Ratio Perm		0.04	0.01		c0.06	0.00	0.05		0.01	0.01		0.02
v/c Ratio		0.26	0.10		0.46	0.03	0.07	0.12	0.01	0.01	0.31	0.03
Uniform Delay, d1		34.8	34.0		35.8	33.7	3.0	4.8	4.5	3.9	6.5	5.3
Progression Factor		1.00	1.00		1.00	1.00	1.00	1.00	1.00	1.00	1.00	1.00
Incremental Delay, d2		0.3	0.1		0.7	0.0	0.0	0.1	0.0	0.0	0.3	0.0
Delay (s)		35.1	34.1		36.5	33.7	3.0	4.9	4.5	3.9	6.9	5.3
Level of Service		D	C		D	C	A	A	A	A	A	A
Approach Delay (s)		34.3			35.6			4.7			6.7	
Approach LOS		C			D			A			A	

Intersection Summary

HCM Average Control Delay	12.5	HCM Level of Service	B
HCM Volume to Capacity ratio	0.33		
Actuated Cycle Length (s)	90.0	Sum of lost time (s)	16.0
Intersection Capacity Utilization	43.6%	ICU Level of Service	A
Analysis Period (min)	15		

c Critical Lane Group

Movement	EBL	EBT	EBR	WBL	WBT	WBR	NBL	NBT	NBR	SBL	SBT	SBR
Lane Configurations												
Ideal Flow (vphpl)	1900	1900	1900	1900	1900	1900	1900	1900	1900	1900	1900	1900
Total Lost time (s)	3.0	3.0	3.0	3.0	3.0	3.0	3.0	3.0	3.0	3.0	3.0	3.0
Lane Util. Factor	1.00	0.95	1.00	0.97	0.95	1.00	0.97	0.95	1.00	0.97	0.95	1.00
Frt	1.00	1.00	0.85	1.00	1.00	0.85	1.00	1.00	0.85	1.00	1.00	0.85
Flt Protected	0.95	1.00	1.00	0.95	1.00	1.00	0.95	1.00	1.00	0.95	1.00	1.00
Satd. Flow (prot)	1770	3539	1583	3433	3539	1583	3433	3539	1583	3433	3539	1583
Flt Permitted	0.95	1.00	1.00	0.95	1.00	1.00	0.95	1.00	1.00	0.95	1.00	1.00
Satd. Flow (perm)	1770	3539	1583	3433	3539	1583	3433	3539	1583	3433	3539	1583
Volume (vph)	123	362	272	226	138	157	144	424	319	318	379	35
Peak-hour factor, PHF	0.95	0.95	0.95	0.95	0.95	0.95	0.95	0.95	0.95	0.95	0.95	0.95
Adj. Flow (vph)	129	381	286	238	145	165	152	446	336	335	399	37
RTOR Reduction (vph)	0	0	0	0	0	0	0	0	0	0	0	0
Lane Group Flow (vph)	129	381	286	238	145	165	152	446	336	335	399	37
Turn Type	Prot		Free	Prot		Free	Prot		Free	Prot		Free
Protected Phases	7	4		3	8		5	2		1	6	
Permitted Phases			Free			Free			Free			Free
Actuated Green, G (s)	10.5	18.6	94.9	11.8	19.9	94.9	9.9	22.3	94.9	14.2	26.6	94.9
Effective Green, g (s)	14.5	22.6	94.9	15.8	23.9	94.9	13.9	26.3	94.9	18.2	30.6	94.9
Actuated g/C Ratio	0.15	0.24	1.00	0.17	0.25	1.00	0.15	0.28	1.00	0.19	0.32	1.00
Clearance Time (s)	7.0	7.0		7.0	7.0		7.0	7.0		7.0	7.0	
Vehicle Extension (s)	3.0	3.0		3.0	3.0		3.0	5.0		3.0	5.0	
Lane Grp Cap (vph)	270	843	1583	572	891	1583	503	981	1583	658	1141	1583
v/s Ratio Prot	c0.07	c0.11		0.07	0.04		0.04	c0.13		c0.10	0.11	
v/s Ratio Perm			0.18			0.10			c0.21			0.02
v/c Ratio	0.48	0.45	0.18	0.42	0.16	0.10	0.30	0.45	0.21	0.51	0.35	0.02
Uniform Delay, d1	36.7	30.9	0.0	35.4	27.7	0.0	36.2	28.4	0.0	34.3	24.6	0.0
Progression Factor	1.00	1.00	1.00	1.00	1.00	1.00	1.00	1.00	1.00	1.00	1.00	1.00
Incremental Delay, d2	1.3	0.4	0.3	0.5	0.1	0.1	0.3	0.7	0.3	0.6	0.4	0.0
Delay (s)	38.1	31.2	0.3	35.9	27.8	0.1	36.5	29.1	0.3	35.0	24.9	0.0
Level of Service	D	C	A	D	C	A	D	C	A	C	C	A
Approach Delay (s)		21.2			23.0			19.9			28.1	
Approach LOS		C			C			B			C	

Intersection Summary			
HCM Average Control Delay	22.9	HCM Level of Service	C
HCM Volume to Capacity ratio	0.47		
Actuated Cycle Length (s)	94.9	Sum of lost time (s)	12.0
Intersection Capacity Utilization	58.4%	ICU Level of Service	B
Analysis Period (min)	15		

c Critical Lane Group

Movement	EBL	EBR	NBL	NBT	SBT	SBR
Lane Configurations						
Ideal Flow (vphpl)	1900	1900	1900	1900	1900	1900
Total Lost time (s)	4.0			4.0	4.0	
Lane Util. Factor	1.00			1.00	1.00	
Frt	0.95			1.00	0.99	
Flt Protected	0.97			1.00	1.00	
Satd. Flow (prot)	1716			1861	1849	
Flt Permitted	0.97			0.98	1.00	
Satd. Flow (perm)	1716			1823	1849	
Volume (vph)	34	20	13	632	826	48
Peak-hour factor, PHF	0.95	0.95	0.95	0.95	0.95	0.95
Adj. Flow (vph)	36	21	14	665	869	51
RTOR Reduction (vph)	17	0	0	0	2	0
Lane Group Flow (vph)	40	0	0	679	918	0
Turn Type			Perm			
Protected Phases	4			2	6	
Permitted Phases			2			
Actuated Green, G (s)	9.0			72.5	72.5	
Effective Green, g (s)	12.0			75.5	75.5	
Actuated g/C Ratio	0.13			0.79	0.79	
Clearance Time (s)	7.0			7.0	7.0	
Vehicle Extension (s)	4.0			3.0	3.0	
Lane Grp Cap (vph)	216			1441	1462	
v/s Ratio Prot	c0.02				c0.50	
v/s Ratio Perm				0.37		
v/c Ratio	0.19			0.47	0.63	
Uniform Delay, d1	37.4			3.3	4.2	
Progression Factor	1.00			1.00	1.00	
Incremental Delay, d2	0.6			0.2	0.9	
Delay (s)	38.0			3.6	5.0	
Level of Service	D			A	A	
Approach Delay (s)	38.0			3.6	5.0	
Approach LOS	D			A	A	

Intersection Summary			
HCM Average Control Delay	5.6	HCM Level of Service	A
HCM Volume to Capacity ratio	0.57		
Actuated Cycle Length (s)	95.5	Sum of lost time (s)	8.0
Intersection Capacity Utilization	61.4%	ICU Level of Service	B
Analysis Period (min)	15		

c Critical Lane Group

HCM Signalized Intersection Capacity Analysis
13: Nokes Blvd & Atlantic Blvd

Kincora
Total Future (2011)

Movement	EBL	EBT	EBR	WBL	WBT	WBR	NBL	NBT	NBR	SBL	SBT	SBR
Lane Configurations												
Ideal Flow (vphpl)	1900	1900	1900	1900	1900	1900	1900	1900	1900	1900	1900	1900
Total Lost time (s)	4.0	4.0	4.0	3.0	4.0	3.0	4.0	3.0	3.0	3.0	3.0	4.0
Lane Util. Factor	0.97	0.95	1.00	0.97	0.95	1.00	0.97	0.95	1.00	0.97	0.95	1.00
Frt	1.00	1.00	0.85	1.00	1.00	0.85	1.00	1.00	0.85	1.00	1.00	0.85
Flt Protected	0.95	1.00	1.00	0.95	1.00	1.00	0.95	1.00	1.00	0.95	1.00	1.00
Satd. Flow (prot)	3433	3539	1583	3433	3539	1583	3433	3539	1583	3433	3539	1583
Flt Permitted	0.95	1.00	1.00	0.95	1.00	1.00	0.95	1.00	1.00	0.95	1.00	1.00
Satd. Flow (perm)	3433	3539	1583	3433	3539	1583	3433	3539	1583	3433	3539	1583
Volume (vph)	217	295	469	121	314	32	378	86	112	33	178	116
Peak-hour factor, PHF	0.95	0.95	0.95	0.95	0.95	0.95	0.95	0.95	0.95	0.95	0.95	0.95
Adj. Flow (vph)	228	311	494	127	331	34	398	91	118	35	187	122
RTOR Reduction (vph)	0	0	0	0	0	0	0	0	77	0	0	0
Lane Group Flow (vph)	228	311	494	127	331	34	398	91	41	35	187	122
Turn Type	Prot		Free	Prot		Free	Prot		pm+ov	Prot		Free
Protected Phases	1	6		5	2		7	4	5	3	8	
Permitted Phases			Free			Free			4			Free
Actuated Green, G (s)	13.7	67.5	140.0	10.0	63.8	140.0	20.2	30.7	40.7	4.3	14.8	140.0
Effective Green, g (s)	16.7	70.5	140.0	14.0	66.8	140.0	23.2	34.2	48.2	8.3	18.3	140.0
Actuated g/C Ratio	0.12	0.50	1.00	0.10	0.48	1.00	0.17	0.24	0.34	0.06	0.13	1.00
Clearance Time (s)	7.0	7.0		7.0	7.0		7.0	6.5	7.0	7.0	6.5	
Vehicle Extension (s)	2.5	4.0		2.5	4.0		2.5	2.5	2.5	2.5	2.5	
Lane Grp Cap (vph)	410	1782	1583	343	1689	1583	569	865	579	204	463	1583
v/s Ratio Prot	c0.07	0.09		0.04	0.09		c0.12	0.03	0.01	0.01	c0.05	
v/s Ratio Perm			c0.31			0.02			0.02			0.08
v/c Ratio	0.56	0.17	0.31	0.37	0.20	0.02	0.70	0.11	0.07	0.17	0.40	0.08
Uniform Delay, d1	58.2	18.9	0.0	58.9	21.1	0.0	55.1	41.0	30.8	62.6	55.8	0.0
Progression Factor	1.00	1.00	1.00	1.00	1.00	1.00	1.00	1.00	1.00	1.00	1.00	1.00
Incremental Delay, d2	1.3	0.2	0.5	0.5	0.3	0.0	3.5	0.0	0.0	0.3	0.4	0.1
Delay (s)	59.5	19.1	0.5	59.4	21.4	0.0	58.6	41.1	30.9	62.9	56.3	0.1
Level of Service	E	B	A	E	C	A	E	D	C	E	E	A
Approach Delay (s)		19.1			29.7			50.6			37.0	
Approach LOS		B			C			D			D	

Intersection Summary			
HCM Average Control Delay	31.4	HCM Level of Service	C
HCM Volume to Capacity ratio	0.43		
Actuated Cycle Length (s)	140.0	Sum of lost time (s)	11.0
Intersection Capacity Utilization	47.7%	ICU Level of Service	A
Analysis Period (min)	15		
c Critical Lane Group			

HCM Signalized Intersection Capacity Analysis
14: Nokes Blvd. & Cascades Parkway

Kincora
Total Future (2011)

Movement	EBL	EBT	EBR	WBL	WBT	WBR	NBL	NBT	NBR	SBL	SBT	SBR
Lane Configurations												
Ideal Flow (vphpi)	1900	1900	1900	1900	1900	1900	1900	1900	1900	1900	1900	1900
Total Lost time (s)	3.0	3.0	3.0	3.0	3.0	3.0	3.0	3.0	3.0	3.0	3.0	3.0
Lane Util. Factor	0.97	1.00	1.00	1.00	0.95	1.00	0.97	0.95	1.00	1.00	0.95	1.00
Frt	1.00	1.00	0.85	1.00	1.00	0.85	1.00	1.00	0.85	1.00	1.00	0.85
Flt Protected	0.95	1.00	1.00	0.95	1.00	1.00	0.95	1.00	1.00	0.95	1.00	1.00
Satd. Flow (prot)	3433	1863	1583	1770	3539	1583	3433	3539	1583	1770	3539	1583
Flt Permitted	0.95	1.00	1.00	0.95	1.00	1.00	0.95	1.00	1.00	0.95	1.00	1.00
Satd. Flow (perm)	3433	1863	1583	1770	3539	1583	3433	3539	1583	1770	3539	1583
Volume (vph)	72	60	79	190	232	18	161	611	220	4	666	116
Peak-hour factor, PHF	0.95	0.95	0.95	0.95	0.95	0.95	0.95	0.95	0.95	0.95	0.95	0.95
Adj. Flow (vph)	76	63	83	200	244	19	169	643	232	4	701	122
RTOR Reduction (vph)	0	0	73	0	0	15	0	0	115	0	0	72
Lane Group Flow (vph)	76	63	10	200	244	4	169	643	117	4	701	50
Turn Type	Prot		Perm	Prot		Perm	Prot		Perm	Prot		Perm
Protected Phases	7	4		3	8		1	6		5	2	
Permitted Phases			4			8			6			2
Actuated Green, G (s)	7.6	7.9	7.9	16.6	16.9	16.9	11.3	47.9	47.9	1.6	38.2	38.2
Effective Green, g (s)	11.6	12.9	12.9	20.6	21.9	21.9	15.3	52.4	52.4	5.6	42.7	42.7
Actuated g/C Ratio	0.11	0.12	0.12	0.20	0.21	0.21	0.15	0.51	0.51	0.05	0.41	0.41
Clearance Time (s)	7.0	8.0	8.0	7.0	8.0	8.0	7.0	7.5	7.5	7.0	7.5	7.5
Vehicle Extension (s)	3.0	3.0	3.0	3.0	3.0	3.0	3.0	3.0	3.0	3.0	3.0	3.0
Lane Grp Cap (vph)	385	232	197	352	749	335	507	1792	801	96	1460	653
v/s Ratio Prot	0.02	0.03		c0.11	c0.07		c0.05	0.18		0.00	c0.20	
v/s Ratio Perm			0.01			0.00			0.07			0.03
v/c Ratio	0.20	0.27	0.05	0.57	0.33	0.01	0.33	0.36	0.15	0.04	0.48	0.08
Uniform Delay, d1	41.7	41.0	39.9	37.4	34.5	32.2	39.5	15.4	13.6	46.4	22.3	18.4
Progression Factor	1.00	1.00	1.00	1.00	1.00	1.00	1.00	1.00	1.00	1.00	1.00	1.00
Incremental Delay, d2	0.3	0.6	0.1	2.1	0.3	0.0	0.4	0.1	0.1	0.2	0.3	0.1
Delay (s)	42.0	41.7	40.0	39.5	34.8	32.3	39.9	15.5	13.7	46.6	22.5	18.5
Level of Service	D	D	D	D	C	C	D	B	B	D	C	B
Approach Delay (s)		41.2			36.7			19.1			22.0	
Approach LOS		D			D			B			C	

Intersection Summary			
HCM Average Control Delay	25.2	HCM Level of Service	C
HCM Volume to Capacity ratio	0.45		
Actuated Cycle Length (s)	103.5	Sum of lost time (s)	9.0
Intersection Capacity Utilization	65.5%	ICU Level of Service	C
Analysis Period (min)	15		
c Critical Lane Group			

HCM Signalized Intersection Capacity Analysis
16: Woodland Road & Potomac View Road

Kincora
Total Future (2011)

Movement	EBL	EBR	NBL	NBT	SBT	SBR
Lane Configurations						
Ideal Flow (vphpl)	1900	1900	1900	1900	1900	1900
Total Lost time (s)	3.0	3.0	3.0	3.0	3.0	3.0
Lane Util. Factor	1.00	1.00	1.00	0.95	0.95	1.00
Frt	1.00	0.85	1.00	1.00	1.00	0.85
Flt Protected	0.95	1.00	0.95	1.00	1.00	1.00
Satd. Flow (prot)	1770	1583	1770	3539	3539	1583
Flt Permitted	0.95	1.00	0.26	1.00	1.00	1.00
Satd. Flow (perm)	1770	1583	476	3539	3539	1583
Volume (vph)	97	54	172	986	751	142
Peak-hour factor, PHF	0.95	0.95	0.95	0.95	0.95	0.95
Adj. Flow (vph)	102	57	181	1038	791	149
RTOR Reduction (vph)	0	47	0	0	0	47
Lane Group Flow (vph)	102	10	181	1038	791	102
Turn Type		Perm	pm+pt			pm+ov
Protected Phases	4		1	6	2	4
Permitted Phases		4	6			2
Actuated Green, G (s)	7.9	7.9	43.7	43.7	29.1	37.0
Effective Green, g (s)	11.9	11.9	47.2	47.2	32.6	44.5
Actuated g/C Ratio	0.18	0.18	0.73	0.73	0.50	0.68
Clearance Time (s)	7.0	7.0	7.0	6.5	6.5	7.0
Vehicle Extension (s)	3.0	3.0	4.0	4.0	4.0	3.0
Lane Grp Cap (vph)	324	289	576	2566	1772	1155
v/s Ratio Prot	c0.06		0.06	c0.29	c0.22	0.02
v/s Ratio Perm		0.01	0.17			0.05
v/c Ratio	0.31	0.04	0.31	0.40	0.45	0.09
Uniform Delay, d1	23.1	21.9	3.8	3.5	10.4	3.5
Progression Factor	1.00	1.00	1.00	1.00	1.00	1.00
Incremental Delay, d2	0.6	0.1	0.4	0.1	0.2	0.0
Delay (s)	23.6	21.9	4.2	3.6	10.7	3.5
Level of Service	C	C	A	A	B	A
Approach Delay (s)	23.0			3.7	9.6	
Approach LOS	C			A	A	

Intersection Summary

HCM Average Control Delay	7.4	HCM Level of Service	A
HCM Volume to Capacity ratio	0.41		
Actuated Cycle Length (s)	65.1	Sum of lost time (s)	9.0
Intersection Capacity Utilization	45.7%	ICU Level of Service	A
Analysis Period (min)	15		

c Critical Lane Group

HCM Signalized Intersection Capacity Analysis
18: Farmwell Road & Ashburn Village Blvd.

Kincora
Total Future (2011)

Movement	EBL	EBT	EBR	WBL	WBT	WBR	NBL	NBT	NBR	SBL	SBT	SBR
Lane Configurations												
Ideal Flow (vphpl)	1900	1900	1900	1900	1900	1900	1900	1900	1900	1900	1900	1900
Total Lost time (s)	3.0	3.0	3.0	3.0	3.0	3.0	3.0	3.0	3.0	3.0	3.0	3.0
Lane Util. Factor	1.00	0.91	1.00	1.00	0.91	1.00	1.00	0.95	1.00	0.97	0.95	1.00
Frt	1.00	1.00	0.85	1.00	1.00	0.85	1.00	1.00	0.85	1.00	1.00	0.85
Flt Protected	0.95	1.00	1.00	0.95	1.00	1.00	0.95	1.00	1.00	0.95	1.00	1.00
Satd. Flow (prot)	1770	5085	1583	1770	5085	1583	1770	3539	1583	3433	3539	1583
Flt Permitted	0.95	1.00	1.00	0.95	1.00	1.00	0.95	1.00	1.00	0.95	1.00	1.00
Satd. Flow (perm)	1770	5085	1583	1770	5085	1583	1770	3539	1583	3433	3539	1583
Volume (vph)	148	1285	252	103	418	381	62	227	110	784	535	413
Peak-hour factor, PHF	0.95	0.95	0.95	0.95	0.95	0.95	0.95	0.95	0.95	0.95	0.95	0.95
Adj. Flow (vph)	156	1353	265	108	440	401	65	239	116	825	563	435
RTOR Reduction (vph)	0	0	0	0	0	0	0	0	9	0	0	77
Lane Group Flow (vph)	156	1353	265	108	440	401	65	239	107	825	563	358
Turn Type	Prot		Free	Prot		Free	Prot		pm+ov	Prot		pm+ov
Protected Phases	1	6		5	2		3	8	5	7	4	1
Permitted Phases			Free			Free			8			4
Actuated Green, G (s)	16.5	42.3	130.0	13.7	39.5	130.0	4.8	14.1	27.8	32.4	41.7	58.2
Effective Green, g (s)	20.5	46.3	130.0	17.7	43.5	130.0	8.8	17.6	35.3	36.4	45.2	65.7
Actuated g/C Ratio	0.16	0.36	1.00	0.14	0.33	1.00	0.07	0.14	0.27	0.28	0.35	0.51
Clearance Time (s)	7.0	7.0		7.0	7.0		7.0	6.5	7.0	7.0	6.5	7.0
Vehicle Extension (s)	2.0	3.0		2.0	3.0		2.0	2.0	2.0	2.0	2.0	2.0
Lane Grp Cap (vph)	279	1811	1583	241	1702	1583	120	479	466	961	1230	837
v/s Ratio Prot	c0.09	c0.27		0.06	0.09		0.04	0.07	0.03	c0.24	c0.16	0.07
v/s Ratio Perm			0.17			c0.25			0.04			0.16
v/c Ratio	0.56	0.75	0.17	0.45	0.26	0.25	0.54	0.50	0.23	0.86	0.46	0.43
Uniform Delay, d1	50.6	36.7	0.0	51.7	31.5	0.0	58.6	52.1	36.8	44.4	32.9	20.3
Progression Factor	1.00	1.00	1.00	0.83	0.78	1.00	1.00	1.00	1.00	1.00	1.00	1.00
Incremental Delay, d2	1.4	2.9	0.2	0.5	0.4	0.4	2.7	0.3	0.1	7.4	0.1	0.1
Delay (s)	52.0	39.6	0.2	43.4	25.0	0.4	61.3	52.4	36.9	51.8	33.0	20.4
Level of Service	D	D	A	D	C	A	E	D	D	D	C	C
Approach Delay (s)		34.8			16.7			49.5			38.5	
Approach LOS		C			B			D			D	

Intersection Summary

HCM Average Control Delay	33.9	HCM Level of Service	C
HCM Volume to Capacity ratio	0.69		
Actuated Cycle Length (s)	130.0	Sum of lost time (s)	6.0
Intersection Capacity Utilization	72.5%	ICU Level of Service	C
Analysis Period (min)	15		

c Critical Lane Group

Movement	EBL	EBT	EBR	WBL	WBT	WBR	NBL	NBT	NBR	SBL	SBT	SBR
Lane Configurations												
Ideal Flow (vphpl)	1900	1900	1900	1900	1900	1900	1900	1900	1900	1900	1900	1900
Total Lost time (s)	3.0	3.0	3.0	3.0	3.0	3.0	3.0	3.0	3.0	3.0	3.0	
Lane Util. Factor	1.00	0.91	1.00	1.00	0.91	1.00	1.00	0.95	1.00	1.00	0.95	
Frt	1.00	1.00	0.85	1.00	1.00	0.85	1.00	1.00	0.85	1.00	0.91	
Flt Protected	0.95	1.00	1.00	0.95	1.00	1.00	0.95	1.00	1.00	0.95	1.00	
Satd. Flow (prot)	1770	5085	1583	1770	5085	1583	1770	3539	1583	1770	3227	
Flt Permitted	0.95	1.00	1.00	0.95	1.00	1.00	0.73	1.00	1.00	0.55	1.00	
Satd. Flow (perm)	1770	5085	1583	1770	5085	1583	1367	3539	1583	1028	3227	
Volume (vph)	57	2103	43	247	792	112	24	55	113	92	13	19
Peak-hour factor, PHF	0.95	0.95	0.95	0.95	0.95	0.95	0.95	0.95	0.95	0.95	0.95	0.95
Adj. Flow (vph)	60	2214	45	260	834	118	25	58	119	97	14	20
RTOR Reduction (vph)	0	0	20	0	0	29	0	0	0	0	17	0
Lane Group Flow (vph)	60	2214	25	260	834	89	25	58	119	97	17	0
Turn Type	Prot		pm+ov	Prot		pm+ov	pm+pt		Free	pm+pt		
Protected Phases	1	6	3	5	2	7	3	8		7	4	
Permitted Phases			6			2	8		Free	4		
Actuated Green, G (s)	5.6	62.7	65.9	22.5	79.1	92.9	9.7	6.5	130.0	25.3	17.1	
Effective Green, g (s)	9.6	66.2	71.4	26.0	82.6	98.4	15.2	10.0	130.0	28.8	20.6	
Actuated g/C Ratio	0.07	0.51	0.55	0.20	0.64	0.76	0.12	0.08	1.00	0.22	0.16	
Clearance Time (s)	7.0	6.5	5.0	6.5	6.5	5.0	5.0	6.5		5.0	6.5	
Vehicle Extension (s)	2.0	3.0	2.0	2.0	3.0	2.0	2.0	2.0		2.0	2.0	
Lane Grp Cap (vph)	131	2589	906	354	3231	1235	176	272	1583	318	511	
v/s Ratio Prot	0.03	c0.44	0.00	c0.15	0.16	0.01	0.01	0.02		c0.04	0.01	
v/s Ratio Perm			0.01			0.05	0.01		0.08	c0.03		
v/c Ratio	0.46	0.86	0.03	0.73	0.26	0.07	0.14	0.21	0.08	0.31	0.03	
Uniform Delay, d1	57.7	27.7	13.4	48.8	10.3	4.1	51.4	56.3	0.0	41.7	46.3	
Progression Factor	1.09	0.66	0.19	1.00	1.00	1.00	1.00	1.00	1.00	1.00	1.00	
Incremental Delay, d2	0.6	2.6	0.0	6.7	0.2	0.0	0.1	0.1	0.1	0.2	0.1	
Delay (s)	63.4	20.9	2.6	55.4	10.5	4.1	51.6	56.5	0.1	41.9	46.4	
Level of Service	E	C	A	E	B	A	D	E	A	D	D	
Approach Delay (s)		21.7			19.5			22.6			43.1	
Approach LOS		C			B			C			D	

Intersection Summary			
HCM Average Control Delay	21.8	HCM Level of Service	C
HCM Volume to Capacity ratio	0.70		
Actuated Cycle Length (s)	130.0	Sum of lost time (s)	9.0
Intersection Capacity Utilization	76.1%	ICU Level of Service	D
Analysis Period (min)	15		

c Critical Lane Group

Movement	EBL	EBT	EBR	WBL	WBT	WBR	NBL	NBT	NBR	SBL	SBT	SBR
Lane Configurations												
Ideal Flow (vphpl)	1900	1900	1900	1900	1900	1900	1900	1900	1900	1900	1900	1900
Total Lost time (s)	3.0	3.0	3.0	3.0	3.0	3.0	3.0	3.0	3.0	3.0	3.0	3.0
Lane Util. Factor	0.97	0.86	1.00	0.97	0.86	1.00	0.97	0.95	1.00	0.97	0.95	1.00
Frt	1.00	1.00	0.85	1.00	1.00	0.85	1.00	1.00	0.85	1.00	1.00	0.85
Flt Protected	0.95	1.00	1.00	0.95	1.00	1.00	0.95	1.00	1.00	0.95	1.00	1.00
Satd. Flow (prot)	3433	6408	1583	3433	6408	1583	3433	3539	1583	3433	3539	1583
Flt Permitted	0.95	1.00	1.00	0.95	1.00	1.00	0.95	1.00	1.00	0.95	1.00	1.00
Satd. Flow (perm)	3433	6408	1583	3433	6408	1583	3433	3539	1583	3433	3539	1583
Volume (vph)	489	3185	199	432	2206	300	81	44	76	154	68	155
Peak-hour factor, PHF	0.95	0.95	0.95	0.95	0.95	0.95	0.95	0.95	0.95	0.95	0.95	0.95
Adj. Flow (vph)	515	3353	209	455	2322	316	85	46	80	162	72	163
RTOR Reduction (vph)	0	0	84	0	0	0	0	0	0	0	0	0
Lane Group Flow (vph)	515	3353	125	455	2322	316	85	46	80	162	72	163
Turn Type	Prot		Perm	Prot		Free	Prot		Free	Prot		Free
Protected Phases	1	6		5	2		7	4		3	8	
Permitted Phases			6			Free			Free			Free
Actuated Green, G (s)	24.2	82.4	82.4	20.3	78.5	145.0	6.0	4.8	145.0	9.5	8.3	145.0
Effective Green, g (s)	28.2	86.4	86.4	24.3	82.5	145.0	10.0	8.8	145.0	13.5	12.3	145.0
Actuated g/C Ratio	0.19	0.60	0.60	0.17	0.57	1.00	0.07	0.06	1.00	0.09	0.08	1.00
Clearance Time (s)	7.0	7.0	7.0	7.0	7.0		7.0	7.0		7.0	7.0	
Vehicle Extension (s)	2.0	3.0	3.0	2.0	3.0		3.0	3.0		3.0	3.0	
Lane Grp Cap (vph)	668	3818	943	575	3646	1583	237	215	1583	320	300	1583
v/s Ratio Prot	c0.15	c0.52		c0.13	0.36		0.02	0.01		c0.05	c0.02	
v/s Ratio Perm			0.08			0.20			0.05			0.10
v/c Ratio	0.77	0.88	0.13	0.79	0.64	0.20	0.36	0.21	0.05	0.51	0.24	0.10
Uniform Delay, d1	55.3	24.8	12.9	57.9	21.1	0.0	64.4	64.8	0.0	62.6	62.0	0.0
Progression Factor	1.00	1.00	1.00	1.00	1.00	1.00	1.00	1.00	1.00	1.00	1.00	1.00
Incremental Delay, d2	5.0	3.2	0.3	6.9	0.9	0.3	0.9	0.5	0.1	1.3	0.4	0.1
Delay (s)	60.4	28.1	13.1	64.8	22.0	0.3	65.4	65.3	0.1	63.8	62.4	0.1
Level of Service	E	C	B	E	C	A	E	E	A	E	E	A
Approach Delay (s)		31.4			26.1			40.6			37.4	
Approach LOS		C			C			D			D	

Intersection Summary			
HCM Average Control Delay	29.8	HCM Level of Service	C
HCM Volume to Capacity ratio	0.76		
Actuated Cycle Length (s)	145.0	Sum of lost time (s)	6.0
Intersection Capacity Utilization	79.5%	ICU Level of Service	D
Analysis Period (min)	15		

c Critical Lane Group

Movement	EBL	EBT	EBR	WBL	WBT	WBR	NBL	NBT	NBR	SBL	SBT	SBR
Lane Configurations												
Ideal Flow (vphpl)	1900	1900	1900	1900	1900	1900	1900	1900	1900	1900	1900	1900
Total Lost time (s)		3.0		3.0	3.0			3.0	3.0		3.0	
Lane Util. Factor		0.95		1.00	0.95			1.00	1.00		1.00	
Frt		0.98		1.00	1.00			1.00	0.85		0.91	
Flt Protected		1.00		0.95	1.00			0.95	1.00		0.99	
Satd. Flow (prot)		3450		1770	3536			1776	1583		1676	
Flt Permitted		0.91		0.10	1.00			0.95	1.00		0.99	
Satd. Flow (perm)		3145		191	3536			1776	1583		1676	
Volume (vph)	24	957	188	218	1125	7	118	3	144	4	3	14
Peak-hour factor, PHF	0.95	0.95	0.95	0.95	0.95	0.95	0.95	0.95	0.95	0.95	0.95	0.95
Adj. Flow (vph)	25	1007	198	229	1184	7	124	3	152	4	3	15
RTOR Reduction (vph)	0	14	0	0	0	0	0	0	0	0	14	0
Lane Group Flow (vph)	0	1216	0	229	1191	0	0	127	152	0	8	0
Turn Type	Perm			pm+pt			Split		pm+ov	Split		
Protected Phases		6		5	2		4	4	5	8	8	
Permitted Phases	6			2					4			
Actuated Green, G (s)		35.2		50.0	50.0			8.3	17.6		2.3	
Effective Green, g (s)		38.2		53.0	53.0			11.3	23.1		5.3	
Actuated g/C Ratio		0.49		0.67	0.67			0.14	0.29		0.07	
Clearance Time (s)		6.0		5.5	6.0			6.0	5.5		6.0	
Vehicle Extension (s)		4.0		2.0	4.0			3.0	2.0		3.0	
Lane Grp Cap (vph)		1528		366	2384			255	465		113	
v/s Ratio Prot				c0.09	0.34			c0.07	0.05		c0.00	
v/s Ratio Perm		c0.39		0.33					0.05			
v/c Ratio		0.80		0.63	0.50			0.50	0.33		0.07	
Uniform Delay, d1		16.9		14.2	6.3			31.0	21.7		34.3	
Progression Factor		1.00		1.00	1.00			1.00	1.00		1.00	
Incremental Delay, d2		3.1		2.4	0.2			1.5	0.2		0.3	
Delay (s)		20.1		16.6	6.5			32.6	21.8		34.6	
Level of Service		C		B	A			C	C		C	
Approach Delay (s)		20.1			8.1			26.7			34.6	
Approach LOS		C			A			C			C	

Intersection Summary			
HCM Average Control Delay	15.1	HCM Level of Service	B
HCM Volume to Capacity ratio	0.66		
Actuated Cycle Length (s)	78.6	Sum of lost time (s)	12.0
Intersection Capacity Utilization	87.8%	ICU Level of Service	E
Analysis Period (min)	15		

c Critical Lane Group

Movement	EBL	EBT	WBT	WBR	SBL	SBR
Lane Configurations						
Ideal Flow (vphpl)	1900	1900	1900	1900	1900	1900
Total Lost time (s)	3.0	3.0	3.0	3.0	3.0	3.0
Lane Util. Factor	0.97	0.95	0.91	0.91	0.97	1.00
Frt	1.00	1.00	1.00	0.85	1.00	0.85
Flt Protected	0.95	1.00	1.00	1.00	0.95	1.00
Satd. Flow (prot)	3433	3539	3390	1441	3433	1583
Flt Permitted	0.95	1.00	1.00	1.00	0.95	1.00
Satd. Flow (perm)	3433	3539	3390	1441	3433	1583
Volume (vph)	659	427	426	362	286	538
Peak-hour factor, PHF	0.95	0.95	0.95	0.95	0.95	0.95
Adj. Flow (vph)	694	449	448	381	301	566
RTOR Reduction (vph)	0	0	0	28	0	416
Lane Group Flow (vph)	694	449	448	353	301	150
Turn Type	Prot			pm+ov		Perm
Protected Phases	5	2	6	4	4	
Permitted Phases				6		4
Actuated Green, G (s)	19.0	43.7	17.7	32.6	14.9	14.9
Effective Green, g (s)	23.0	47.7	21.7	41.1	19.4	19.4
Actuated g/C Ratio	0.31	0.65	0.30	0.56	0.27	0.27
Clearance Time (s)	7.0	7.0	7.0	7.5	7.5	7.5
Vehicle Extension (s)	2.0	3.0	3.0	3.0	3.0	3.0
Lane Grp Cap (vph)	1080	2309	1006	869	911	420
v/s Ratio Prot	c0.20	0.13	c0.13	c0.11	0.09	
v/s Ratio Perm				0.14		0.09
v/c Ratio	0.64	0.19	0.45	0.41	0.33	0.36
Uniform Delay, d1	21.5	5.1	20.8	9.1	21.6	21.8
Progression Factor	1.00	1.00	1.00	1.00	1.00	1.00
Incremental Delay, d2	1.0	0.0	0.3	0.3	0.2	0.5
Delay (s)	22.5	5.1	21.1	9.4	21.8	22.3
Level of Service	C	A	C	A	C	C
Approach Delay (s)		15.7	15.7		22.1	
Approach LOS		B	B		C	

Intersection Summary			
HCM Average Control Delay	17.7	HCM Level of Service	B
HCM Volume to Capacity ratio	0.50		
Actuated Cycle Length (s)	73.1	Sum of lost time (s)	6.0
Intersection Capacity Utilization	55.6%	ICU Level of Service	B
Analysis Period (min)	15		

c Critical Lane Group

HCM Signalized Intersection Capacity Analysis
24: Russel Branch Parkway & Loudoun County Parkway

Kincora
Total Future (2011)

Movement	EBL	EBT	EBR	WBL	WBT	WBR	NBL	NBT	NBR	SBL	SBT	SBR
Lane Configurations												
Ideal Flow (vphpl)	1900	1900	1900	1900	1900	1900	1900	1900	1900	1900	1900	1900
Total Lost time (s)		4.0	4.0	4.0		4.0	4.0	4.0	4.0	4.0	4.0	4.0
Lane Util. Factor		1.00	1.00	1.00		1.00	1.00	0.95	1.00	1.00	0.95	1.00
Frt		1.00	0.85	1.00		0.85	1.00	1.00	0.85	1.00	1.00	0.85
Flt Protected		0.95	1.00	0.95		1.00	0.95	1.00	1.00	0.95	1.00	1.00
Satd. Flow (prot)		1770	1583	1770		1583	1770	3539	1583	1770	3539	1583
Flt Permitted		0.76	1.00	0.74		1.00	0.95	1.00	1.00	0.95	1.00	1.00
Satd. Flow (perm)		1410	1583	1377		1583	1770	3539	1583	1770	3539	1583
Volume (vph)	27	0	36	9	0	26	44	636	63	190	657	49
Peak-hour factor, PHF	0.95	0.95	0.95	0.95	0.95	0.95	0.95	0.95	0.95	0.95	0.95	0.95
Adj. Flow (vph)	28	0	38	9	0	27	46	669	66	200	692	52
RTOR Reduction (vph)	0	0	33	0	0	24	0	0	34	0	0	21
Lane Group Flow (vph)	0	28	5	9	0	3	46	669	32	200	692	31
Turn Type	Perm		Perm	Perm		Perm	Prot		Perm	Prot		Perm
Protected Phases		4			8		5	2		1	6	
Permitted Phases	4		4	8		8			2			6
Actuated Green, G (s)		5.2	5.2	5.2		5.2	2.6	28.7	28.7	9.8	35.9	35.9
Effective Green, g (s)		8.2	8.2	8.2		8.2	5.6	31.7	31.7	12.8	38.9	38.9
Actuated g/C Ratio		0.13	0.13	0.13		0.13	0.09	0.49	0.49	0.20	0.60	0.60
Clearance Time (s)		7.0	7.0	7.0		7.0	7.0	7.0	7.0	7.0	7.0	7.0
Vehicle Extension (s)		3.0	3.0	3.0		3.0	2.0	3.0	3.0	2.0	3.0	3.0
Lane Grp Cap (vph)		179	201	175		201	153	1734	776	350	2128	952
v/s Ratio Prot							0.03	c0.19		c0.11	0.20	
v/s Ratio Perm		c0.02	0.00	0.01		0.00			0.02			0.02
v/c Ratio		0.16	0.02	0.05		0.02	0.30	0.39	0.04	0.57	0.33	0.03
Uniform Delay, d1		25.2	24.7	24.8		24.7	27.7	10.4	8.6	23.5	6.4	5.2
Progression Factor		1.00	1.00	1.00		1.00	1.00	1.00	1.00	1.00	1.00	1.00
Incremental Delay, d2		0.4	0.0	0.1		0.0	0.4	0.1	0.0	1.4	0.1	0.0
Delay (s)		25.6	24.8	25.0		24.8	28.1	10.5	8.6	24.9	6.5	5.3
Level of Service		C	C	C		C	C	B	A	C	A	A
Approach Delay (s)		25.1			24.8			11.4			10.3	
Approach LOS		C			C			B			B	

Intersection Summary			
HCM Average Control Delay	11.6	HCM Level of Service	B
HCM Volume to Capacity ratio	0.40		
Actuated Cycle Length (s)	64.7	Sum of lost time (s)	12.0
Intersection Capacity Utilization	46.4%	ICU Level of Service	A
Analysis Period (min)	15		

c Critical Lane Group

HCM Unsignalized Intersection Capacity Analysis
26: Gloucester Pkwy & Pacific Boulevard

Kincora
Total Future (2011)

Movement	WBL	WBR	NBT	NBR	SBL	SBT
Lane Configurations						
Sign Control	Stop		Free			Free
Grade	0%		0%			0%
Volume (veh/h)	231	490	340	16	212	116
Peak Hour Factor	0.95	0.95	0.95	0.95	0.95	0.95
Hourly flow rate (vph)	243	516	358	17	223	122
Pedestrians						
Lane Width (ft)						
Walking Speed (ft/s)						
Percent Blockage						
Right turn flare (veh)						
Median type	None					
Median storage veh)						
Upstream signal (ft)						
pX, platoon unblocked						
vC, conflicting volume	935	366			375	
vC1, stage 1 conf vol						
vC2, stage 2 conf vol						
vCu, unblocked vol	935	366			375	
tC, single (s)	6.4	6.2			4.1	
tC, 2 stage (s)						
tF (s)	3.5	3.3			2.2	
p0 queue free %	0	24			81	
cM capacity (veh/h)	239	679			1184	

Direction, Lane #	WB 1	WB 2	NB 1	SB 1
Volume Total	243	516	375	345
Volume Left	243	0	0	223
Volume Right	0	516	17	0
cSH	239	679	1700	1184
Volume to Capacity	1.02	0.76	0.22	0.19
Queue Length 95th (ft)	245	176	0	17
Control Delay (s)	106.9	25.1	0.0	6.3
Lane LOS	F	D		A
Approach Delay (s)	51.3		0.0	6.3
Approach LOS	F			

Intersection Summary			
Average Delay	27.8		
Intersection Capacity Utilization	59.5%	ICU Level of Service	B
Analysis Period (min)	15		

Movement	EBL	EBT	WBT	WBR	SWL	SWR
Lane Configurations		↑↑	↑↑			↱↑
Sign Control		Free	Free		Stop	
Grade		0%	0%		0%	
Volume (veh/h)	0	275	384	0	0	464
Peak Hour Factor	0.95	0.95	0.95	0.95	0.95	0.95
Hourly flow rate (vph)	0	289	404	0	0	488
Pedestrians						
Lane Width (ft)						
Walking Speed (ft/s)						
Percent Blockage						
Right turn flare (veh)						
Median type					None	
Median storage veh)						
Upstream signal (ft)						
pX, platoon unblocked						
vC, conflicting volume	404				549	202
vC1, stage 1 conf vol						
vC2, stage 2 conf vol						
vCu, unblocked vol	404				549	202
tC, single (s)	4.1				6.8	6.9
tC, 2 stage (s)						
tF (s)	2.2				3.5	3.3
p0 queue free %	100				100	39
cM capacity (veh/h)	1151				466	805

Direction, Lane #	EB 1	EB 2	WB 1	WB 2	SW 1	SW 2
Volume Total	145	145	202	202	244	244
Volume Left	0	0	0	0	0	0
Volume Right	0	0	0	0	244	244
cSH	1700	1700	1700	1700	805	805
Volume to Capacity	0.09	0.09	0.12	0.12	0.30	0.30
Queue Length 95th (ft)	0	0	0	0	32	32
Control Delay (s)	0.0	0.0	0.0	0.0	11.4	11.4
Lane LOS					B	B
Approach Delay (s)	0.0		0.0		11.4	
Approach LOS					B	

Intersection Summary			
Average Delay	4.7		
Intersection Capacity Utilization	33.5%	ICU Level of Service	A
Analysis Period (min)	15		

HCM Signalized Intersection Capacity Analysis
5: Route 7 & Countryside Blvd.

Kincora
Total Future (2011)

Movement	EBL	EBT	EBR	WBL	WBT	WBR	NBL	NBT	NBR	SBL	SBT	SBR
Lane Configurations												
Ideal Flow (vphpl)	1900	1900	1900	1900	1900	1900	1900	1900	1900	1900	1900	1900
Total Lost time (s)	3.0	3.0	3.0	3.0	3.0	3.0	3.0	3.0	3.0	3.0	3.0	3.0
Lane Util. Factor	0.97	0.86	1.00	0.97	0.86	1.00	0.97	0.95	1.00	0.97	0.95	1.00
Frt	1.00	1.00	0.85	1.00	1.00	0.85	1.00	1.00	0.85	1.00	1.00	0.85
Flt Protected	0.95	1.00	1.00	0.95	1.00	1.00	0.95	1.00	1.00	0.95	1.00	1.00
Satd. Flow (prot)	3433	6408	1583	3433	6408	1583	3433	3539	1583	3433	3539	1583
Flt Permitted	0.95	1.00	1.00	0.95	1.00	1.00	0.95	1.00	1.00	0.95	1.00	1.00
Satd. Flow (perm)	3433	6408	1583	3433	6408	1583	3433	3539	1583	3433	3539	1583
Volume (vph)	474	2014	158	643	2401	214	225	148	383	186	163	295
Peak-hour factor, PHF	0.95	0.95	0.95	0.95	0.95	0.95	0.95	0.95	0.95	0.95	0.95	0.95
Adj. Flow (vph)	499	2120	166	677	2527	225	237	156	403	196	172	311
RTOR Reduction (vph)	0	0	0	0	0	49	0	0	0	0	0	4
Lane Group Flow (vph)	499	2120	166	677	2527	176	237	156	403	196	172	307
Turn Type	Prot		Free	Prot		pm+ov	Prot		Free	Prot		pm+ov
Protected Phases	1	6		5	2	3	7	4		3	8	1
Permitted Phases			Free			2			Free			8
Actuated Green, G (s)	25.9	64.9	150.0	34.0	73.0	84.9	10.0	11.2	150.0	11.9	13.1	39.0
Effective Green, g (s)	29.9	68.9	150.0	38.0	77.0	92.9	14.0	15.2	150.0	15.9	17.1	47.0
Actuated g/C Ratio	0.20	0.46	1.00	0.25	0.51	0.62	0.09	0.10	1.00	0.11	0.11	0.31
Clearance Time (s)	7.0	7.0		7.0	7.0	7.0	7.0	7.0		7.0	7.0	7.0
Vehicle Extension (s)	2.0	2.0		3.0	2.0	2.0	2.0	2.0		2.0	2.0	2.0
Lane Grp Cap (vph)	684	2943	1583	870	3289	1012	320	359	1583	364	403	528
v/s Ratio Prot	0.15	0.33		c0.20	c0.39	0.02	c0.07	0.04		0.06	0.05	c0.12
v/s Ratio Perm			0.10			0.09			c0.25			0.08
v/c Ratio	0.73	0.72	0.10	0.78	0.77	0.17	0.74	0.43	0.25	0.54	0.43	0.58
Uniform Delay, d1	56.3	32.8	0.0	52.1	29.3	12.2	66.2	63.4	0.0	63.6	61.9	43.2
Progression Factor	1.00	1.00	1.00	1.00	1.00	1.00	1.00	1.00	1.00	1.00	1.00	1.00
Incremental Delay, d2	3.3	1.6	0.1	4.4	1.8	0.0	7.8	0.3	0.4	0.8	0.3	1.1
Delay (s)	59.6	34.3	0.1	56.5	31.1	12.2	74.1	63.7	0.4	64.3	62.2	44.3
Level of Service	E	C	A	E	C	B	E	E	A	E	E	D
Approach Delay (s)		36.8			34.9			34.7			54.6	
Approach LOS		D			C			C			D	

Intersection Summary				
HCM Average Control Delay	37.3	HCM Level of Service	D	
HCM Volume to Capacity ratio	0.73			
Actuated Cycle Length (s)	150.0	Sum of lost time (s)	6.0	
Intersection Capacity Utilization	73.1%	ICU Level of Service	D	
Analysis Period (min)	15			

c Critical Lane Group

HCM Signalized Intersection Capacity Analysis
6: Route 7 & Palisade Parkway

Kincora
Total Future (2011)

Movement	EBL	EBT	EBR	WBL	WBT	WBR	NBL	NBT	NBR	SBL	SBT	SBR
Lane Configurations												
Ideal Flow (vphpl)	1900	1900	1900	1900	1900	1900	1900	1900	1900	1900	1900	1900
Total Lost time (s)	3.0	3.0	3.0	3.0	3.0	3.0	3.0	3.0	3.0	3.0	3.0	3.0
Lane Util. Factor	0.97	0.86	1.00	1.00	0.86	1.00	0.97	1.00	1.00	0.97	1.00	1.00
Frt	1.00	1.00	0.85	1.00	1.00	0.85	1.00	1.00	0.85	1.00	1.00	0.85
Flt Protected	0.95	1.00	1.00	0.95	1.00	1.00	0.95	1.00	1.00	0.95	1.00	1.00
Satd. Flow (prot)	3433	6408	1583	1770	6408	1583	3433	1863	1583	3433	1863	1583
Flt Permitted	0.95	1.00	1.00	0.95	1.00	1.00	0.95	1.00	1.00	0.95	1.00	1.00
Satd. Flow (perm)	3433	6408	1583	1770	6408	1583	3433	1863	1583	3433	1863	1583
Volume (vph)	263	2165	25	74	2596	161	391	97	234	225	77	234
Peak-hour factor, PHF	0.95	0.95	0.95	0.95	0.95	0.95	0.95	0.95	0.95	0.95	0.95	0.95
Adj. Flow (vph)	277	2279	26	78	2733	169	412	102	246	237	81	246
RTOR Reduction (vph)	0	0	0	0	0	0	0	0	92	0	0	0
Lane Group Flow (vph)	277	2279	26	78	2733	169	412	102	154	237	81	246
Turn Type	Prot		Free	Prot		Free	Split		pm+ov	Split		pm+ov
Protected Phases	1	6		5	2		4	4	5	3	3	1
Permitted Phases			Free			Free			4			3
Actuated Green, G (s)	7.0	47.9	120.0	8.1	49.0	120.0	22.9	22.9	31.0	13.1	13.1	20.1
Effective Green, g (s)	11.0	51.9	120.0	12.1	53.0	120.0	26.9	26.9	39.0	17.1	17.1	28.1
Actuated g/C Ratio	0.09	0.43	1.00	0.10	0.44	1.00	0.22	0.22	0.32	0.14	0.14	0.23
Clearance Time (s)	7.0	7.0		7.0	7.0		7.0	7.0	7.0	7.0	7.0	7.0
Vehicle Extension (s)	2.0	4.0		2.0	4.0		3.0	3.0	2.0	3.0	3.0	2.0
Lane Grp Cap (vph)	315	2771	1583	178	2830	1583	770	418	554	489	265	371
v/s Ratio Prot	c0.08	0.36		0.04	c0.43		c0.12	0.05	0.03	0.07	0.04	c0.06
v/s Ratio Perm			0.02			c0.11			0.07			0.09
v/c Ratio	0.88	0.82	0.02	0.44	0.97	0.11	0.54	0.24	0.28	0.48	0.31	0.66
Uniform Delay, d1	53.8	30.0	0.0	50.8	32.6	0.0	41.0	38.2	30.0	47.4	46.1	41.7
Progression Factor	1.00	1.00	1.00	1.00	1.00	1.00	1.00	1.00	1.00	1.00	1.00	1.00
Incremental Delay, d2	22.5	2.9	0.0	0.6	10.6	0.1	0.7	0.3	0.1	0.8	0.7	3.4
Delay (s)	76.4	32.9	0.0	51.4	43.2	0.1	41.8	38.5	30.1	48.2	46.8	45.1
Level of Service	E	C	A	D	D	A	D	D	C	D	D	D
Approach Delay (s)		37.2			41.0			37.6			46.6	
Approach LOS		D			D			D			D	

Intersection Summary				
HCM Average Control Delay	39.7	HCM Level of Service	D	
HCM Volume to Capacity ratio	0.78			
Actuated Cycle Length (s)	120.0	Sum of lost time (s)	9.0	
Intersection Capacity Utilization	73.3%	ICU Level of Service	D	
Analysis Period (min)	15			

c Critical Lane Group

HCM Signalized Intersection Capacity Analysis
7: Countryside Blvd. & Algonkian Parkway

Kincora
Total Future (2011)

Movement	WBL	WBR	NBT	NBR	SBL	SBT
Lane Configurations						
Ideal Flow (vphpl)	1900	1900	1900	1900	1900	1900
Total Lost time (s)	3.0	3.0	3.0		3.0	3.0
Lane Util. Factor	1.00	1.00	0.95		1.00	0.95
Frt	1.00	0.85	0.98		1.00	1.00
Flt Protected	0.95	1.00	1.00		0.95	1.00
Satd. Flow (prot)	1770	1583	3455		1770	3539
Flt Permitted	0.95	1.00	1.00		0.23	1.00
Satd. Flow (perm)	1770	1583	3455		422	3539
Volume (vph)	112	262	618	117	250	542
Peak-hour factor, PHF	0.95	0.95	0.95	0.95	0.95	0.95
Adj. Flow (vph)	118	276	651	123	263	571
RTOR Reduction (vph)	0	110	14	0	0	0
Lane Group Flow (vph)	118	166	760	0	263	571
Turn Type		pm+ov			pm+pt	
Protected Phases	4	1	2		1	6
Permitted Phases		4			6	
Actuated Green, G (s)	6.9	15.5	18.3		33.9	33.9
Effective Green, g (s)	10.9	23.5	22.8		38.4	38.4
Actuated g/C Ratio	0.20	0.42	0.41		0.69	0.69
Clearance Time (s)	7.0	7.0	7.5		7.0	7.5
Vehicle Extension (s)	2.0	2.0	2.0		2.0	2.0
Lane Grp Cap (vph)	349	759	1424		600	2457
v/s Ratio Prot	c0.07	0.05	c0.22		c0.10	0.16
v/s Ratio Perm		0.05			0.20	
v/c Ratio	0.34	0.22	0.53		0.44	0.23
Uniform Delay, d1	19.1	10.1	12.2		4.4	3.1
Progression Factor	1.00	1.00	1.00		1.00	1.00
Incremental Delay, d2	0.2	0.1	0.2		0.2	0.0
Delay (s)	19.3	10.1	12.4		4.6	3.1
Level of Service	B	B	B		A	A
Approach Delay (s)	12.9		12.4			3.6
Approach LOS	B		B			A

Intersection Summary

HCM Average Control Delay	8.8	HCM Level of Service	A
HCM Volume to Capacity ratio	0.46		
Actuated Cycle Length (s)	55.3	Sum of lost time (s)	9.0
Intersection Capacity Utilization	50.9%	ICU Level of Service	A
Analysis Period (min)	15		

c Critical Lane Group

HCM Signalized Intersection Capacity Analysis
8: Winding Road & Algonkian Parkway

Kincora
Total Future (2011)

Movement	EBL	EBT	EBR	WBL	WBT	WBR	NBL	NBT	NBR	SBL	SBT	SBR
Lane Configurations												
Ideal Flow (vphpl)	1900	1900	1900	1900	1900	1900	1900	1900	1900	1900	1900	1900
Total Lost time (s)		4.0	4.0		4.0	4.0	4.0	4.0	4.0	4.0	4.0	4.0
Lane Util. Factor		1.00	1.00		1.00	1.00	1.00	0.95	1.00	1.00	0.95	1.00
Frt		1.00	0.85		1.00	0.85	1.00	1.00	0.85	1.00	1.00	0.85
Flt Protected		0.96	1.00		0.95	1.00	0.95	1.00	1.00	0.95	1.00	1.00
Satd. Flow (prot)		1779	1583		1770	1583	1770	3539	1583	1770	3539	1583
Flt Permitted		0.71	1.00		0.74	1.00	0.40	1.00	1.00	0.35	1.00	1.00
Satd. Flow (perm)		1323	1583		1370	1583	749	3539	1583	644	3539	1583
Volume (vph)	29	2	82	37	0	30	148	756	83	29	547	72
Peak-hour factor, PHF	0.95	0.95	0.95	0.95	0.95	0.95	0.95	0.95	0.95	0.95	0.95	0.95
Adj. Flow (vph)	31	2	86	39	0	32	156	796	87	31	576	76
RTOR Reduction (vph)	0	0	70	0	0	27	0	0	25	0	0	24
Lane Group Flow (vph)	0	33	16	0	39	5	156	796	62	31	576	52
Turn Type	Perm		pm+ov	Perm		pm+ov	pm+pt		Perm	pm+pt		Perm
Protected Phases		4	5		8	1	5	2		1	6	
Permitted Phases	4		4	8		8	2		2	6		6
Actuated Green, G (s)		4.9	10.9		4.9	7.9	67.1	61.1	61.1	61.1	58.1	58.1
Effective Green, g (s)		7.9	16.9		7.9	13.9	73.1	64.1	64.1	67.1	61.1	61.1
Actuated g/C Ratio		0.09	0.19		0.09	0.15	0.81	0.71	0.71	0.75	0.68	0.68
Clearance Time (s)		7.0	7.0		7.0	7.0	7.0	7.0	7.0	7.0	7.0	7.0
Vehicle Extension (s)		2.0	2.0		2.0	2.0	2.0	2.0	2.0	2.0	2.0	2.0
Lane Grp Cap (vph)		116	368		120	315	710	2521	1127	555	2403	1075
v/s Ratio Prot			0.00			0.00	c0.02	c0.22		0.00	0.16	
v/s Ratio Perm		0.02	0.01		c0.03	0.00	0.16		0.04	0.04		0.03
v/c Ratio		0.28	0.04		0.33	0.02	0.22	0.32	0.05	0.06	0.24	0.05
Uniform Delay, d1		38.4	29.9		38.5	32.3	1.9	4.8	3.9	3.0	5.5	4.8
Progression Factor		1.00	1.00		1.00	1.00	1.00	1.00	1.00	1.00	1.00	1.00
Incremental Delay, d2		0.5	0.0		0.6	0.0	0.1	0.3	0.1	0.0	0.2	0.1
Delay (s)		38.9	30.0		39.1	32.3	2.0	5.1	4.0	3.0	5.8	4.9
Level of Service		D	C		D	C	A	A	A	A	A	A
Approach Delay (s)		32.4			36.0			4.6			5.6	
Approach LOS		C			D			A			A	

Intersection Summary

HCM Average Control Delay	7.8	HCM Level of Service	A
HCM Volume to Capacity ratio	0.32		
Actuated Cycle Length (s)	90.0	Sum of lost time (s)	12.0
Intersection Capacity Utilization	42.9%	ICU Level of Service	A
Analysis Period (min)	15		

c Critical Lane Group

HCM Signalized Intersection Capacity Analysis
10: Gloucester Parkway & Ashburn Village Blvd.

Kincora
Total Future (2011)

Movement	EBL	EBT	EBR	WBL	WBT	WBR	NBL	NBT	NBR	SBL	SBT	SBR
Lane Configurations												
Ideal Flow (vphpl)	1900	1900	1900	1900	1900	1900	1900	1900	1900	1900	1900	1900
Total Lost time (s)	3.0	3.0	3.0	3.0	3.0	3.0	3.0	3.0	3.0	3.0	3.0	3.0
Lane Util. Factor	1.00	0.95	1.00	0.97	0.95	1.00	0.97	0.95	1.00	0.97	0.95	1.00
Frt	1.00	1.00	0.85	1.00	1.00	0.85	1.00	1.00	0.85	1.00	1.00	0.85
Flt Protected	0.95	1.00	1.00	0.95	1.00	1.00	0.95	1.00	1.00	0.95	1.00	1.00
Satd. Flow (prot)	1770	3539	1583	3433	3539	1583	3433	3539	1583	3433	3539	1583
Flt Permitted	0.95	1.00	1.00	0.95	1.00	1.00	0.95	1.00	1.00	0.95	1.00	1.00
Satd. Flow (perm)	1770	3539	1583	3433	3539	1583	3433	3539	1583	3433	3539	1583
Volume (vph)	105	109	317	202	207	306	445	456	160	164	615	178
Peak-hour factor, PHF	0.95	0.95	0.95	0.95	0.95	0.95	0.95	0.95	0.95	0.95	0.95	0.95
Adj. Flow (vph)	111	115	334	213	218	322	468	480	168	173	647	187
RTOR Reduction (vph)	0	0	0	0	0	0	0	0	0	0	0	0
Lane Group Flow (vph)	111	115	334	213	218	322	468	480	168	173	647	187
Turn Type	Prot		Free	Prot		Free	Prot		Free	Prot		Free
Protected Phases	7	4		3	8		5	2		1	6	
Permitted Phases			Free			Free			Free			Free
Actuated Green, G (s)	9.7	11.8	99.7	13.9	16.0	99.7	17.6	35.1	99.7	10.9	28.4	99.7
Effective Green, g (s)	13.7	15.8	99.7	17.9	20.0	99.7	21.6	39.1	99.7	14.9	32.4	99.7
Actuated g/C Ratio	0.14	0.16	1.00	0.18	0.20	1.00	0.22	0.39	1.00	0.15	0.32	1.00
Clearance Time (s)	7.0	7.0		7.0	7.0		7.0	7.0		7.0	7.0	
Vehicle Extension (s)	3.0	3.0		3.0	3.0		3.0	5.0		3.0	5.0	
Lane Grp Cap (vph)	243	561	1583	616	710	1583	744	1388	1583	513	1150	1583
v/s Ratio Prot	c0.06	0.03		c0.06	c0.06		c0.14	0.14		0.05	c0.18	
v/s Ratio Perm			0.21			0.20			0.11			0.12
v/c Ratio	0.46	0.20	0.21	0.35	0.31	0.20	0.63	0.35	0.11	0.34	0.56	0.12
Uniform Delay, d1	39.6	36.5	0.0	35.8	33.9	0.0	35.4	21.3	0.0	38.0	27.8	0.0
Progression Factor	1.00	1.00	1.00	1.00	1.00	1.00	1.00	1.00	1.00	1.00	1.00	1.00
Incremental Delay, d2	1.4	0.2	0.3	0.3	0.2	0.3	1.7	0.3	0.1	0.4	1.0	0.2
Delay (s)	40.9	36.7	0.3	36.1	34.2	0.3	37.1	21.6	0.1	38.4	28.8	0.2
Level of Service	D	D	A	D	C	A	D	C	A	D	C	A
Approach Delay (s)		15.8			20.2			24.9			25.1	
Approach LOS		B			C			C			C	

Intersection Summary			
HCM Average Control Delay	22.5	HCM Level of Service	C
HCM Volume to Capacity ratio	0.50		
Actuated Cycle Length (s)	99.7	Sum of lost time (s)	9.0
Intersection Capacity Utilization	61.3%	ICU Level of Service	B
Analysis Period (min)	15		

c Critical Lane Group

HCM Signalized Intersection Capacity Analysis
11: Smith Switch Road & Loudoun County Parkway

Kincora
Total Future (2011)

Movement	EBL	EBR	NBL	NBT	SBT	SBR
Lane Configurations						
Ideal Flow (vphpl)	1900	1900	1900	1900	1900	1900
Total Lost time (s)	4.0			4.0	4.0	
Lane Util. Factor	1.00			1.00	1.00	
Frt	0.97			1.00	1.00	
Flt Protected	0.96			1.00	1.00	
Satd. Flow (prot)	1742			1862	1857	
Flt Permitted	0.96			0.99	1.00	
Satd. Flow (perm)	1742			1845	1857	
Volume (vph)	75	19	10	1443	1030	23
Peak-hour factor, PHF	0.95	0.95	0.95	0.95	0.95	0.95
Adj. Flow (vph)	79	20	11	1519	1084	24
RTOR Reduction (vph)	7	0	0	0	1	0
Lane Group Flow (vph)	92	0	0	1530	1107	0
Turn Type			Perm			
Protected Phases	4			2	6	
Permitted Phases			2			
Actuated Green, G (s)	12.4			102.0	102.0	
Effective Green, g (s)	15.4			105.0	105.0	
Actuated g/C Ratio	0.12			0.82	0.82	
Clearance Time (s)	7.0			7.0	7.0	
Vehicle Extension (s)	4.0			3.0	3.0	
Lane Grp Cap (vph)	209			1509	1519	
v/s Ratio Prot	c0.05				0.60	
v/s Ratio Perm				c0.83		
v/c Ratio	0.44			1.01	0.73	
Uniform Delay, d1	52.5			11.7	5.3	
Progression Factor	1.00			1.00	1.00	
Incremental Delay, d2	2.0			26.7	1.8	
Delay (s)	54.5			38.4	7.1	
Level of Service	D			D	A	
Approach Delay (s)	54.5			38.4	7.1	
Approach LOS	D			D	A	

Intersection Summary			
HCM Average Control Delay	26.3	HCM Level of Service	C
HCM Volume to Capacity ratio	0.94		
Actuated Cycle Length (s)	128.4	Sum of lost time (s)	8.0
Intersection Capacity Utilization	98.9%	ICU Level of Service	F
Analysis Period (min)	15		

c Critical Lane Group

HCM Signalized Intersection Capacity Analysis
13: Nokes Blvd & Atlantic Blvd

Kincora
Total Future (2011)

Movement	EBL	EBT	EBR	WBL	WBT	WBR	NBL	NBT	NBR	SBL	SBT	SBR
Lane Configurations												
Ideal Flow (vphpl)	1900	1900	1900	1900	1900	1900	1900	1900	1900	1900	1900	1900
Total Lost time (s)	4.0	4.0	4.0	3.0	4.0	3.0	4.0	3.0	3.0	3.0	3.0	4.0
Lane Util. Factor	0.97	0.95	1.00	0.97	0.95	1.00	0.97	0.95	1.00	0.97	0.95	1.00
Frt	1.00	1.00	0.85	1.00	1.00	0.85	1.00	1.00	0.85	1.00	1.00	0.85
Flt Protected	0.95	1.00	1.00	0.95	1.00	1.00	0.95	1.00	1.00	0.95	1.00	1.00
Satd. Flow (prot)	3433	3539	1583	3433	3539	1583	3433	3539	1583	3433	3539	1583
Flt Permitted	0.95	1.00	1.00	0.95	1.00	1.00	0.95	1.00	1.00	0.95	1.00	1.00
Satd. Flow (perm)	3433	3539	1583	3433	3539	1583	3433	3539	1583	3433	3539	1583
Volume (vph)	392	461	433	223	580	85	1129	346	287	52	206	360
Peak-hour factor, PHF	0.95	0.95	0.95	0.95	0.95	0.95	0.95	0.95	0.95	0.95	0.95	0.95
Adj. Flow (vph)	413	485	456	235	611	89	1188	364	302	55	217	379
RTOR Reduction (vph)	0	0	0	0	0	0	0	0	78	0	0	0
Lane Group Flow (vph)	413	485	456	235	611	89	1188	364	224	55	217	379
Turn Type	Prot		Free	Prot		Free	Prot		pm+ov	Prot		Free
Protected Phases	1	6		5	2		7	4	5	3	8	
Permitted Phases			Free			Free			4			Free
Actuated Green, G (s)	12.1	21.0	100.0	8.1	17.0	100.0	36.0	39.4	47.5	4.0	7.4	100.0
Effective Green, g (s)	15.1	24.0	100.0	12.1	20.0	100.0	39.0	42.9	55.0	8.0	10.9	100.0
Actuated g/C Ratio	0.15	0.24	1.00	0.12	0.20	1.00	0.39	0.43	0.55	0.08	0.11	1.00
Clearance Time (s)	7.0	7.0		7.0	7.0		7.0	6.5	7.0	7.0	6.5	
Vehicle Extension (s)	2.5	4.0		2.5	4.0		2.5	2.5	2.5	2.5	2.5	
Lane Grp Cap (vph)	518	849	1583	415	708	1583	1339	1518	918	275	386	1583
v/s Ratio Prot	c0.12	0.14		0.07	c0.17		c0.35	0.10	0.03	0.02	c0.06	
v/s Ratio Perm			c0.29			0.06			0.11			0.24
v/c Ratio	0.80	0.57	0.29	0.57	0.86	0.06	0.89	0.24	0.24	0.20	0.56	0.24
Uniform Delay, d1	41.0	33.5	0.0	41.5	38.7	0.0	28.4	18.2	11.7	43.0	42.3	0.0
Progression Factor	1.00	1.00	1.00	1.00	1.00	1.00	1.00	1.00	1.00	1.00	1.00	1.00
Incremental Delay, d2	8.1	2.8	0.5	1.4	13.2	0.1	7.4	0.1	0.1	0.3	1.5	0.4
Delay (s)	49.1	36.3	0.5	42.9	51.9	0.1	35.9	18.2	11.8	43.3	43.8	0.4
Level of Service	D	D	A	D	D	A	D	B	B	D	D	A
Approach Delay (s)		28.1			44.7			28.5			18.5	
Approach LOS		C			D			C			B	

Intersection Summary			
HCM Average Control Delay	30.2	HCM Level of Service	C
HCM Volume to Capacity ratio	0.81		
Actuated Cycle Length (s)	100.0	Sum of lost time (s)	15.0
Intersection Capacity Utilization	78.5%	ICU Level of Service	D
Analysis Period (min)	15		

c Critical Lane Group

HCM Signalized Intersection Capacity Analysis
14: Nokes Blvd. & Cascades Parkway

Kincora
Total Future (2011)

Movement	EBL	EBT	EBR	WBL	WBT	WBR	NBL	NBT	NBR	SBL	SBT	SBR
Lane Configurations												
Ideal Flow (vphpl)	1900	1900	1900	1900	1900	1900	1900	1900	1900	1900	1900	1900
Total Lost time (s)	3.0	3.0	3.0	3.0	3.0	3.0	3.0	3.0	3.0	3.0	3.0	3.0
Lane Util. Factor	0.97	1.00	1.00	1.00	0.95	1.00	0.97	0.95	1.00	1.00	0.95	1.00
Frt	1.00	1.00	0.85	1.00	1.00	0.85	1.00	1.00	0.85	1.00	1.00	0.85
Flt Protected	0.95	1.00	1.00	0.95	1.00	1.00	0.95	1.00	1.00	0.95	1.00	1.00
Satd. Flow (prot)	3433	1863	1583	1770	3539	1583	3433	3539	1583	1770	3539	1583
Flt Permitted	0.95	1.00	1.00	0.95	1.00	1.00	0.95	1.00	1.00	0.95	1.00	1.00
Satd. Flow (perm)	3433	1863	1583	1770	3539	1583	3433	3539	1583	1770	3539	1583
Volume (vph)	329	285	260	238	162	33	244	1229	298	4	874	258
Peak-hour factor, PHF	0.95	0.95	0.95	0.95	0.95	0.95	0.95	0.95	0.95	0.95	0.95	0.95
Adj. Flow (vph)	346	300	274	251	171	35	257	1294	314	4	920	272
RTOR Reduction (vph)	0	0	170	0	0	27	0	0	108	0	0	165
Lane Group Flow (vph)	346	300	104	251	171	8	257	1294	206	4	920	107
Turn Type	Prot		Perm	Prot		Perm	Prot		Perm	Prot		Perm
Protected Phases	7	4		3	8		1	6		5	2	
Permitted Phases			4			8			6			2
Actuated Green, G (s)	17.5	22.3	22.3	19.9	24.7	24.7	12.5	58.2	58.2	1.8	47.5	47.5
Effective Green, g (s)	21.5	27.3	27.3	23.9	29.7	29.7	16.5	62.7	62.7	5.8	52.0	52.0
Actuated g/C Ratio	0.16	0.21	0.21	0.18	0.23	0.23	0.13	0.48	0.48	0.04	0.39	0.39
Clearance Time (s)	7.0	8.0	8.0	7.0	8.0	8.0	7.0	7.5	7.5	7.0	7.5	7.5
Vehicle Extension (s)	3.0	3.0	3.0	3.0	3.0	3.0	3.0	3.0	3.0	3.0	3.0	3.0
Lane Grp Cap (vph)	560	386	328	321	798	357	430	1685	754	78	1397	625
v/s Ratio Prot	0.10	c0.16		c0.14	0.05		c0.07	c0.37		0.00	0.26	
v/s Ratio Perm			0.07			0.00			0.13			0.07
v/c Ratio	0.62	0.78	0.32	0.78	0.21	0.02	0.60	0.77	0.27	0.05	0.66	0.17
Uniform Delay, d1	51.3	49.3	44.3	51.4	41.5	39.7	54.5	28.5	20.8	60.3	32.6	25.9
Progression Factor	1.00	1.00	1.00	1.00	1.00	1.00	1.00	1.00	1.00	1.00	1.00	1.00
Incremental Delay, d2	2.0	9.5	0.6	11.7	0.1	0.0	2.2	2.2	0.2	0.3	1.1	0.1
Delay (s)	53.3	58.8	44.8	63.1	41.6	39.7	56.7	30.7	21.0	60.6	33.7	26.0
Level of Service	D	E	D	E	D	D	E	C	C	E	C	C
Approach Delay (s)		52.6			53.3			32.6			32.1	
Approach LOS		D			D			C			C	

Intersection Summary			
HCM Average Control Delay	38.7	HCM Level of Service	D
HCM Volume to Capacity ratio	0.75		
Actuated Cycle Length (s)	131.7	Sum of lost time (s)	12.0
Intersection Capacity Utilization	83.8%	ICU Level of Service	E
Analysis Period (min)	15		

c Critical Lane Group

Movement	EBL	EBR	NBL	NBT	SBT	SBR
Lane Configurations						
Ideal Flow (vphpl)	1900	1900	1900	1900	1900	1900
Total Lost time (s)	3.0	3.0	3.0	3.0	3.0	3.0
Lane Util. Factor	1.00	1.00	1.00	0.95	0.95	1.00
Frt	1.00	0.85	1.00	1.00	1.00	0.85
Flt Protected	0.95	1.00	0.95	1.00	1.00	1.00
Satd. Flow (prot)	1770	1583	1770	3539	3539	1583
Flt Permitted	0.95	1.00	0.09	1.00	1.00	1.00
Satd. Flow (perm)	1770	1583	176	3539	3539	1583
Volume (vph)	211	183	249	1516	1150	116
Peak-hour factor, PHF	0.95	0.95	0.95	0.95	0.95	0.95
Adj. Flow (vph)	222	193	262	1596	1211	122
RTOR Reduction (vph)	0	148	0	0	0	37
Lane Group Flow (vph)	222	45	262	1596	1211	85
Turn Type		Perm	pm+pt			pm+ov
Protected Phases	4		1	6	2	4
Permitted Phases		4	6			2
Actuated Green, G (s)	16.4	16.4	58.1	58.1	37.2	53.6
Effective Green, g (s)	20.4	20.4	61.6	61.6	40.7	61.1
Actuated g/C Ratio	0.23	0.23	0.70	0.70	0.46	0.69
Clearance Time (s)	7.0	7.0	7.0	6.5	6.5	7.0
Vehicle Extension (s)	3.0	3.0	4.0	4.0	4.0	3.0
Lane Grp Cap (vph)	410	367	447	2477	1637	1153
v/s Ratio Prot	c0.13		0.12	c0.45	c0.34	0.02
v/s Ratio Perm		0.03	0.29			0.04
v/c Ratio	0.54	0.12	0.59	0.64	0.74	0.07
Uniform Delay, d1	29.7	26.7	17.8	7.2	19.3	4.3
Progression Factor	1.00	1.00	1.00	1.00	1.00	1.00
Incremental Delay, d2	1.5	0.1	2.3	0.7	1.9	0.0
Delay (s)	31.2	26.9	20.1	7.9	21.2	4.4
Level of Service	C	C	C	A	C	A
Approach Delay (s)	29.2			9.6	19.7	
Approach LOS	C			A	B	

Intersection Summary			
HCM Average Control Delay	15.6	HCM Level of Service	B
HCM Volume to Capacity ratio	0.67		
Actuated Cycle Length (s)	88.0	Sum of lost time (s)	9.0
Intersection Capacity Utilization	67.3%	ICU Level of Service	C
Analysis Period (min)	15		

c Critical Lane Group

Movement	EBL	EBT	EBR	WBL	WBT	WBR	NBL	NBT	NBR	SBL	SBT	SBR
Lane Configurations												
Ideal Flow (vphpl)	1900	1900	1900	1900	1900	1900	1900	1900	1900	1900	1900	1900
Total Lost time (s)	3.0	3.0	3.0	3.0	3.0	3.0	3.0	3.0	3.0	3.0	3.0	3.0
Lane Util. Factor	1.00	0.91	1.00	1.00	0.91	1.00	1.00	0.95	1.00	0.97	0.95	1.00
Frt	1.00	1.00	0.85	1.00	1.00	0.85	1.00	1.00	0.85	1.00	1.00	0.85
Flt Protected	0.95	1.00	1.00	0.95	1.00	1.00	0.95	1.00	1.00	0.95	1.00	1.00
Satd. Flow (prot)	1770	5085	1583	1770	5085	1583	1770	3539	1583	3433	3539	1583
Flt Permitted	0.95	1.00	1.00	0.95	1.00	1.00	0.95	1.00	1.00	0.95	1.00	1.00
Satd. Flow (perm)	1770	5085	1583	1770	5085	1583	1770	3539	1583	3433	3539	1583
Volume (vph)	226	732	194	216	1743	1202	127	549	106	685	394	156
Peak-hour factor, PHF	0.95	0.95	0.95	0.95	0.95	0.95	0.95	0.95	0.95	0.95	0.95	0.95
Adj. Flow (vph)	238	771	204	227	1835	1265	134	578	112	721	415	164
RTOR Reduction (vph)	0	0	0	0	0	0	0	0	11	0	0	52
Lane Group Flow (vph)	238	771	204	227	1835	1265	134	578	101	721	415	112
Turn Type	Prot		Free	Prot		Free	Prot		pm+ov	Prot		pm+ov
Protected Phases	1	6		5	2		3	8	5	7	4	1
Permitted Phases			Free			Free			8			4
Actuated Green, G (s)	16.5	37.7	130.0	19.5	40.7	130.0	12.5	24.3	43.8	21.0	32.8	49.3
Effective Green, g (s)	20.5	41.7	130.0	23.5	44.7	130.0	16.5	27.8	51.3	25.0	36.3	56.8
Actuated g/C Ratio	0.16	0.32	1.00	0.18	0.34	1.00	0.13	0.21	0.39	0.19	0.28	0.44
Clearance Time (s)	7.0	7.0		7.0	7.0		7.0	6.5	7.0	7.0	6.5	7.0
Vehicle Extension (s)	2.0	3.0		2.0	3.0		2.0	2.0	2.0	2.0	2.0	2.0
Lane Grp Cap (vph)	279	1631	1583	320	1748	1583	225	757	661	660	988	728
v/s Ratio Prot	0.13	0.15		0.13	c0.36		0.08	0.16	0.03	c0.21	0.12	0.02
v/s Ratio Perm			0.13			c0.80			0.04			0.05
v/c Ratio	0.85	0.47	0.13	0.71	1.05	0.80	0.60	0.76	0.15	1.09	0.42	0.15
Uniform Delay, d1	53.3	35.3	0.0	50.0	42.6	0.0	53.6	48.0	25.4	52.5	38.3	22.1
Progression Factor	1.00	1.00	1.00	1.00	1.00	1.00	1.00	1.00	1.00	1.00	1.00	1.00
Incremental Delay, d2	20.8	1.0	0.2	5.8	35.9	4.3	2.8	4.1	0.0	62.9	0.1	0.0
Delay (s)	74.1	36.3	0.2	55.8	78.6	4.3	56.4	52.2	25.4	115.4	38.4	22.1
Level of Service	E	D	A	E	E	A	E	D	C	F	D	C
Approach Delay (s)		37.7			48.8			49.2			79.0	
Approach LOS		D			D			D			E	

Intersection Summary			
HCM Average Control Delay	52.7	HCM Level of Service	D
HCM Volume to Capacity ratio	0.94		
Actuated Cycle Length (s)	130.0	Sum of lost time (s)	3.0
Intersection Capacity Utilization	94.2%	ICU Level of Service	F
Analysis Period (min)	15		

c Critical Lane Group

HCM Signalized Intersection Capacity Analysis
19: Farmwell Road & Smith Switch Road

Kincora
Total Future (2011)

Movement	EBL	EBT	EBR	WBL	WBT	WBR	NBL	NBT	NBR	SBL	SBT	SBR
Lane Configurations												
Ideal Flow (vphpl)	1900	1900	1900	1900	1900	1900	1900	1900	1900	1900	1900	1900
Total Lost time (s)	3.0	3.0	3.0	3.0	3.0	3.0	3.0	3.0	3.0	3.0	3.0	
Lane Util. Factor	1.00	0.91	1.00	1.00	0.91	1.00	1.00	0.95	1.00	1.00	0.95	
Frt	1.00	1.00	0.85	1.00	1.00	0.85	1.00	1.00	0.85	1.00	0.92	
Flt Protected	0.95	1.00	1.00	0.95	1.00	1.00	0.95	1.00	1.00	0.95	1.00	
Satd. Flow (prot)	1770	5085	1583	1770	5085	1583	1770	3539	1583	1770	3241	
Flt Permitted	0.95	1.00	1.00	0.95	1.00	1.00	0.66	1.00	1.00	0.54	1.00	
Satd. Flow (perm)	1770	5085	1583	1770	5085	1583	1237	3539	1583	1013	3241	
Volume (vph)	17	1460	45	417	2596	146	130	32	432	194	58	74
Peak-hour factor, PHF	0.95	0.95	0.95	0.95	0.95	0.95	0.95	0.95	0.95	0.95	0.95	0.95
Adj. Flow (vph)	18	1537	47	439	2733	154	137	34	455	204	61	78
RTOR Reduction (vph)	0	0	23	0	0	30	0	0	0	0	69	0
Lane Group Flow (vph)	18	1537	24	439	2733	124	137	34	455	204	70	0
Turn Type	Prot		pm+ov	Prot		pm+ov	pm+pt		Free	pm+pt		
Protected Phases	1	6	3	5	2	7	3	8		7	4	
Permitted Phases			6			2	8		Free	4		
Actuated Green, G (s)	2.8	50.9	63.1	37.3	85.4	105.1	17.3	5.1	140.0	31.8	12.6	
Effective Green, g (s)	6.8	54.4	70.6	41.3	88.9	112.6	24.8	8.6	140.0	35.3	16.1	
Actuated g/C Ratio	0.05	0.39	0.50	0.29	0.64	0.80	0.18	0.06	1.00	0.25	0.12	
Clearance Time (s)	7.0	6.5	7.0	7.0	6.5	7.0	7.0	6.5		7.0	6.5	
Vehicle Extension (s)	2.0	3.0	2.0	2.0	3.0	2.0	2.0	2.0		2.0	2.0	
Lane Grp Cap (vph)	86	1976	832	522	3229	1307	281	217	1583	384	373	
v/s Ratio Prot	0.01	0.30	0.00	c0.25	c0.54	0.02	0.06	0.01		c0.09	0.02	
v/s Ratio Perm			0.01			0.06	0.03		0.29	c0.04		
v/c Ratio	0.21	0.78	0.03	0.84	0.85	0.09	0.49	0.16	0.29	0.53	0.19	
Uniform Delay, d1	64.0	37.5	17.5	46.3	20.2	2.9	51.4	62.3	0.0	44.3	56.0	
Progression Factor	1.00	1.00	1.00	1.00	1.00	1.00	1.00	1.00	1.00	1.00	1.00	
Incremental Delay, d2	0.4	3.1	0.0	11.2	2.9	0.0	0.5	0.1	0.5	0.7	1.1	
Delay (s)	64.5	40.6	17.5	57.5	23.1	2.9	51.9	62.4	0.5	45.0	57.1	
Level of Service	E	D	B	E	C	A	D	E	A	D	E	
Approach Delay (s)		40.2			26.7			15.1			49.9	
Approach LOS		D			C			B			D	

Intersection Summary

HCM Average Control Delay	30.5	HCM Level of Service	C
HCM Volume to Capacity ratio	0.76		
Actuated Cycle Length (s)	140.0	Sum of lost time (s)	6.0
Intersection Capacity Utilization	85.9%	ICU Level of Service	E
Analysis Period (min)	15		

c Critical Lane Group

HCM Signalized Intersection Capacity Analysis
21: Waxpool Road & Pacific Blvd

Kincora
Total Future (2011)

Movement	EBL	EBT	EBR	WBL	WBT	WBR	NBL	NBT	NBR	SBL	SBT	SBR
Lane Configurations												
Ideal Flow (vphpl)	1900	1900	1900	1900	1900	1900	1900	1900	1900	1900	1900	1900
Total Lost time (s)	3.0	3.0	3.0	3.0	3.0	3.0	3.0	3.0	3.0	3.0	3.0	3.0
Lane Util. Factor	0.97	0.86	1.00	0.97	0.86	1.00	0.97	0.95	1.00	0.97	0.95	1.00
Frt	1.00	1.00	0.85	1.00	1.00	0.85	1.00	1.00	0.85	1.00	1.00	0.85
Flt Protected	0.95	1.00	1.00	0.95	1.00	1.00	0.95	1.00	1.00	0.95	1.00	1.00
Satd. Flow (prot)	3433	6408	1583	3433	6408	1583	3433	3539	1583	3433	3539	1583
Flt Permitted	0.95	1.00	1.00	0.95	1.00	1.00	0.95	1.00	1.00	0.95	1.00	1.00
Satd. Flow (perm)	3433	6408	1583	3433	6408	1583	3433	3539	1583	3433	3539	1583
Volume (vph)	416	2251	94	72	3919	342	343	69	676	317	71	667
Peak-hour factor, PHF	0.95	0.95	0.95	0.95	0.95	0.95	0.95	0.95	0.95	0.95	0.95	0.95
Adj. Flow (vph)	438	2369	99	76	4125	360	361	73	712	334	75	702
RTOR Reduction (vph)	0	0	31	0	0	0	0	0	0	0	0	0
Lane Group Flow (vph)	438	2369	68	76	4125	360	361	73	712	334	75	702
Turn Type	Prot		Perm	Prot		Free	Prot		Free	Prot		Free
Protected Phases	1	6		5	2		7	4		3	8	
Permitted Phases			6			Free			Free			Free
Actuated Green, G (s)	14.0	95.0	95.0	5.0	86.0	145.0	11.0	6.0	145.0	11.0	6.0	145.0
Effective Green, g (s)	18.0	99.0	99.0	9.0	90.0	145.0	15.0	10.0	145.0	15.0	10.0	145.0
Actuated g/C Ratio	0.12	0.68	0.68	0.06	0.62	1.00	0.10	0.07	1.00	0.10	0.07	1.00
Clearance Time (s)	7.0	7.0	7.0	7.0	7.0		7.0	7.0		7.0	7.0	
Vehicle Extension (s)	2.0	3.0	3.0	2.0	3.0		3.0	3.0		3.0	3.0	
Lane Grp Cap (vph)	426	4375	1081	213	3977	1583	355	244	1583	355	244	1583
v/s Ratio Prot	c0.13	0.37		0.02	c0.64		c0.11	0.02		0.10	0.02	
v/s Ratio Perm			0.04			0.23			c0.45			0.44
v/c Ratio	1.03	0.54	0.06	0.36	1.04	0.23	1.02	0.30	0.45	0.94	0.31	0.44
Uniform Delay, d1	63.5	11.6	7.6	65.2	27.5	0.0	65.0	64.2	0.0	64.6	64.2	0.0
Progression Factor	1.00	1.00	1.00	1.00	1.00	1.00	1.00	1.00	1.00	1.00	1.00	1.00
Incremental Delay, d2	51.0	0.5	0.1	0.4	25.1	0.3	52.1	0.7	0.9	32.7	0.7	0.9
Delay (s)	114.5	12.1	7.7	65.6	52.6	0.3	117.1	64.9	0.9	97.3	64.9	0.9
Level of Service	F	B	A	E	D	A	F	E	A	F	E	A
Approach Delay (s)		27.4			48.7			41.6			34.2	
Approach LOS		C			D			D			C	

Intersection Summary

HCM Average Control Delay	39.8	HCM Level of Service	D
HCM Volume to Capacity ratio	0.98		
Actuated Cycle Length (s)	145.0	Sum of lost time (s)	9.0
Intersection Capacity Utilization	95.1%	ICU Level of Service	F
Analysis Period (min)	15		

c Critical Lane Group

Movement	EBL	EBT	EBR	WBL	WBT	WBR	NBL	NBT	NBR	SBL	SBT	SBR
Lane Configurations												
Ideal Flow (vphpl)	1900	1900	1900	1900	1900	1900	1900	1900	1900	1900	1900	1900
Total Lost time (s)		3.0		3.0	3.0			3.0	3.0		3.0	
Lane Util. Factor		0.95		1.00	0.95			1.00	1.00		1.00	
Frt		0.99		1.00	1.00			1.00	0.85		0.94	
Flt Protected		1.00		0.95	1.00			0.95	1.00		0.98	
Satd. Flow (prot)		3498		1770	3539			1775	1583		1724	
Flt Permitted		0.92		0.06	1.00			0.95	1.00		0.98	
Satd. Flow (perm)		3234		117	3539			1775	1583		1724	
Volume (vph)	25	1590	125	165	1015	0	180	2	262	7	3	7
Peak-hour factor, PHF	0.95	0.95	0.95	0.95	0.95	0.95	0.95	0.95	0.95	0.95	0.95	0.95
Adj. Flow (vph)	26	1674	132	174	1068	0	189	2	276	7	3	7
RTOR Reduction (vph)	0	3	0	0	0	0	0	0	0	0	7	0
Lane Group Flow (vph)	0	1829	0	174	1068	0	0	191	276	0	10	0
Turn Type	Perm			pm+pt			Split		pm+ov	Split		
Protected Phases		6		5	2		4	4	5	8	8	
Permitted Phases	6			2					4			
Actuated Green, G (s)		57.7		68.8	68.8			15.7	21.3		2.7	
Effective Green, g (s)		60.7		71.8	71.8			18.7	26.8		5.7	
Actuated g/C Ratio		0.58		0.68	0.68			0.18	0.25		0.05	
Clearance Time (s)		6.0		5.5	6.0			6.0	5.5		6.0	
Vehicle Extension (s)		4.0		2.0	4.0			3.0	2.0		3.0	
Lane Grp Cap (vph)		1866		207	2415			316	403		93	
v/s Ratio Prot				c0.06	0.30			0.11	c0.05		c0.01	
v/s Ratio Perm		c0.57		0.51					0.12			
v/c Ratio		0.98		0.84	0.44			0.60	0.68		0.11	
Uniform Delay, d1		21.7		30.2	7.6			39.8	35.4		47.3	
Progression Factor		1.00		1.00	1.00			1.00	1.00		1.00	
Incremental Delay, d2		16.2		24.4	0.2			3.2	3.8		0.5	
Delay (s)		37.8		54.6	7.8			43.1	39.2		47.9	
Level of Service		D		D	A			D	D		D	
Approach Delay (s)		37.8			14.3			40.8			47.9	
Approach LOS		D			B			D			D	

Intersection Summary			
HCM Average Control Delay	30.1	HCM Level of Service	C
HCM Volume to Capacity ratio	0.86		
Actuated Cycle Length (s)	105.2	Sum of lost time (s)	12.0
Intersection Capacity Utilization	103.5%	ICU Level of Service	G
Analysis Period (min)	15		

c Critical Lane Group

Movement	EBL	EBT	WBT	WBR	SBL	SBR
Lane Configurations						
Ideal Flow (vphpl)	1900	1900	1900	1900	1900	1900
Total Lost time (s)	3.0	3.0	3.0	3.0	3.0	3.0
Lane Util. Factor	0.97	0.95	0.91	0.91	0.97	1.00
Frt	1.00	1.00	0.98	0.85	1.00	0.85
Flt Protected	0.95	1.00	1.00	1.00	0.95	1.00
Satd. Flow (prot)	3433	3539	3335	1441	3433	1583
Flt Permitted	0.95	1.00	1.00	1.00	0.95	1.00
Satd. Flow (perm)	3433	3539	3335	1441	3433	1583
Volume (vph)	1088	537	525	751	623	718
Peak-hour factor, PHF	0.95	0.95	0.95	0.95	0.95	0.95
Adj. Flow (vph)	1145	565	553	791	656	756
RTOR Reduction (vph)	0	0	5	7	0	481
Lane Group Flow (vph)	1145	565	615	717	656	275
Turn Type	Prot			pm+ov		Perm
Protected Phases	5	2	6	4	4	
Permitted Phases				6		4
Actuated Green, G (s)	45.5	78.6	26.1	65.9	39.8	39.8
Effective Green, g (s)	49.5	82.6	30.1	74.4	44.3	44.3
Actuated g/C Ratio	0.37	0.62	0.23	0.56	0.33	0.33
Clearance Time (s)	7.0	7.0	7.0	7.5	7.5	7.5
Vehicle Extension (s)	2.0	3.0	3.0	3.0	3.0	3.0
Lane Grp Cap (vph)	1279	2200	755	839	1144	528
v/s Ratio Prot	c0.33	0.16	0.18	c0.28	0.19	
v/s Ratio Perm				0.21		0.17
v/c Ratio	0.90	0.26	0.81	0.85	0.57	0.52
Uniform Delay, d1	39.3	11.3	48.7	24.7	36.5	35.7
Progression Factor	1.00	1.00	1.00	1.00	1.00	1.00
Incremental Delay, d2	8.2	0.1	6.7	8.5	0.7	0.9
Delay (s)	47.5	11.4	55.5	33.1	37.2	36.7
Level of Service	D	B	E	C	D	D
Approach Delay (s)		35.6	43.4		36.9	
Approach LOS		D	D		D	

Intersection Summary			
HCM Average Control Delay	38.4	HCM Level of Service	D
HCM Volume to Capacity ratio	0.87		
Actuated Cycle Length (s)	132.9	Sum of lost time (s)	6.0
Intersection Capacity Utilization	81.3%	ICU Level of Service	D
Analysis Period (min)	15		

c Critical Lane Group

HCM Signalized Intersection Capacity Analysis
24: Pacific Blvd & Loudoun County Parkway

Kincora
Total Future (2011)

Movement	EBL	EBT	EBR	WBL	WBT	WBR	NBL	NBT	NBR	SBL	SBT	SBR
Lane Configurations												
Ideal Flow (vphpl)	1900	1900	1900	1900	1900	1900	1900	1900	1900	1900	1900	1900
Total Lost time (s)		4.0	4.0	4.0		4.0	4.0	4.0	4.0	4.0	4.0	4.0
Lane Util. Factor		1.00	1.00	1.00		1.00	1.00	0.95	1.00	1.00	0.95	1.00
Frt		1.00	0.85	1.00		0.85	1.00	1.00	0.85	1.00	1.00	0.85
Flt Protected		0.95	1.00	0.95		1.00	0.95	1.00	1.00	0.95	1.00	1.00
Satd. Flow (prot)		1770	1583	1770		1583	1770	3539	1583	1770	3539	1583
Flt Permitted		0.76	1.00	0.46		1.00	0.95	1.00	1.00	0.95	1.00	1.00
Satd. Flow (perm)		1410	1583	851		1583	1770	3539	1583	1770	3539	1583
Volume (vph)	226	0	181	56	0	168	139	1230	12	35	868	147
Peak-hour factor, PHF	0.95	0.95	0.95	0.95	0.95	0.95	0.95	0.95	0.95	0.95	0.95	0.95
Adj. Flow (vph)	238	0	191	59	0	177	146	1295	13	37	914	155
RTOR Reduction (vph)	0	0	140	0	0	130	0	0	4	0	0	71
Lane Group Flow (vph)	0	238	51	59	0	47	146	1295	9	37	914	84
Turn Type	Perm		Perm	Perm		Perm	Prot		Perm	Prot		Perm
Protected Phases		4			8		5	2		1	6	
Permitted Phases	4		4	8		8			2			6
Actuated Green, G (s)		20.9	20.9	20.9		20.9	9.9	43.7	43.7	4.0	37.8	37.8
Effective Green, g (s)		23.9	23.9	23.9		23.9	12.9	46.7	46.7	7.0	40.8	40.8
Actuated g/C Ratio		0.27	0.27	0.27		0.27	0.14	0.52	0.52	0.08	0.46	0.46
Clearance Time (s)		7.0	7.0	7.0		7.0	7.0	7.0	7.0	7.0	7.0	7.0
Vehicle Extension (s)		3.0	3.0	3.0		3.0	2.0	3.0	3.0	2.0	3.0	3.0
Lane Grp Cap (vph)		376	422	227		422	255	1845	825	138	1612	721
v/s Ratio Prot							c0.08	c0.37		0.02	0.26	
v/s Ratio Perm		c0.17	0.03	0.07		0.03			0.01			0.05
v/c Ratio		0.63	0.12	0.26		0.11	0.57	0.70	0.01	0.27	0.57	0.12
Uniform Delay, d1		29.0	24.9	25.9		24.8	35.8	16.2	10.3	36.9	17.9	14.0
Progression Factor		1.00	1.00	1.00		1.00	1.00	1.00	1.00	1.00	1.00	1.00
Incremental Delay, d2		3.5	0.1	0.6		0.1	1.9	1.2	0.0	0.4	0.5	0.1
Delay (s)		32.4	25.0	26.5		24.9	37.7	17.4	10.3	39.3	18.4	14.1
Level of Service		C	C	C		C	D	B	B	D	B	B
Approach Delay (s)		29.1			25.3			19.4			18.5	
Approach LOS		C			C			B			B	

Intersection Summary			
HCM Average Control Delay	20.8	HCM Level of Service	C
HCM Volume to Capacity ratio	0.65		
Actuated Cycle Length (s)	69.6	Sum of lost time (s)	8.0
Intersection Capacity Utilization	69.0%	ICU Level of Service	C
Analysis Period (min)	15		

c Critical Lane Group

HCM Unsignalized Intersection Capacity Analysis
26: Gloucester Pkwy & Pacific Blvd

Kincora
Total Future (2011)

Movement	WBL	WBR	NBT	NBR	SBL	SBT
Lane Configurations						
Sign Control	Stop		Free			Free
Grade	0%		0%			0%
Volume (veh/h)	47	371	281	72	598	457
Peak Hour Factor	0.95	0.95	0.95	0.95	0.95	0.95
Hourly flow rate (vph)	49	391	296	76	629	481
Pedestrians						
Lane Width (ft)						
Walking Speed (ft/s)						
Percent Blockage						
Right turn flare (veh)						
Median type	None					
Median storage veh)						
Upstream signal (ft)						
pX, platoon unblocked						
vC, conflicting volume	2074	334			372	
vC1, stage 1 conf vol						
vC2, stage 2 conf vol						
vCu, unblocked vol	2074	334			372	
tC, single (s)	6.4	6.2			4.1	
tC, 2 stage (s)						
tF (s)	3.5	3.3			2.2	
p0 queue free %	0	45			47	
cM capacity (veh/h)	28	708			1187	

Direction, Lane #	WB 1	WB 2	NB 1	SB 1
Volume Total	49	391	372	1111
Volume Left	49	0	0	629
Volume Right	0	391	76	0
cSH	28	708	1700	1187
Volume to Capacity	1.78	0.55	0.22	0.53
Queue Length 95th (ft)	147	85	0	81
Control Delay (s)	677.1	16.2	0.0	10.1
Lane LOS	F	C		B
Approach Delay (s)	90.5		0.0	10.1
Approach LOS	F			

Intersection Summary			
Average Delay	26.6		
Intersection Capacity Utilization	89.6%	ICU Level of Service	E
Analysis Period (min)	15		

Movement	EBL	EBT	WBT	WBR	SWL	SWR
Lane Configurations		↑↑	↑↑			↱↑
Sign Control		Free	Free		Stop	
Grade		0%	0%		0%	
Volume (veh/h)	0	1610	137	0	0	291
Peak Hour Factor	0.95	0.95	0.95	0.95	0.95	0.95
Hourly flow rate (vph)	0	1695	144	0	0	306
Pedestrians						
Lane Width (ft)						
Walking Speed (ft/s)						
Percent Blockage						
Right turn flare (veh)						
Median type					None	
Median storage veh)						
Upstream signal (ft)						
pX, platoon unblocked						
vC, conflicting volume	144				992	72
vC1, stage 1 conf vol						
vC2, stage 2 conf vol						
vCu, unblocked vol	144				992	72
tC, single (s)	4.1				6.8	6.9
tC, 2 stage (s)						
tF (s)	2.2				3.5	3.3
p0 queue free %	100				100	69
cM capacity (veh/h)	1436				243	975

Direction, Lane #	EB 1	EB 2	WB 1	WB 2	SW 1	SW 2
Volume Total	847	847	72	72	153	153
Volume Left	0	0	0	0	0	0
Volume Right	0	0	0	0	153	153
cSH	1700	1700	1700	1700	975	975
Volume to Capacity	0.50	0.50	0.04	0.04	0.16	0.16
Queue Length 95th (ft)	0	0	0	0	14	14
Control Delay (s)	0.0	0.0	0.0	0.0	9.4	9.4
Lane LOS					A	A
Approach Delay (s)	0.0		0.0		9.4	
Approach LOS					A	

Intersection Summary			
Average Delay	1.3		
Intersection Capacity Utilization	47.8%	ICU Level of Service	A
Analysis Period (min)	15		

HCM Signalized Intersection Capacity Analysis
11: Smith Switch Road & Loudoun County Parkway

Kincora
Total Future 2011

Movement	EBL	EBR	NBL	NBT	SBT	SBR
Lane Configurations						
Ideal Flow (vphpl)	1900	1900	1900	1900	1900	1900
Total Lost time (s)	4.0			4.0	4.0	
Lane Util. Factor	1.00			1.00	1.00	
Frt	0.95			1.00	1.00	
Flt Protected	0.97			1.00	1.00	
Satd. Flow (prot)	1718			1861	1861	
Flt Permitted	0.97			0.99	1.00	
Satd. Flow (perm)	1718			1841	1861	
Volume (vph)	9	5	11	591	527	4
Peak-hour factor, PHF	0.95	0.95	0.95	0.95	0.95	0.95
Adj. Flow (vph)	9	5	12	622	555	4
RTOR Reduction (vph)	5	0	0	0	0	0
Lane Group Flow (vph)	9	0	0	634	559	0
Turn Type			Perm			
Protected Phases	4			2	6	
Permitted Phases			2			
Actuated Green, G (s)	4.4			99.7	99.7	
Effective Green, g (s)	7.4			102.7	102.7	
Actuated g/C Ratio	0.06			0.87	0.87	
Clearance Time (s)	7.0			7.0	7.0	
Vehicle Extension (s)	4.0			3.0	3.0	
Lane Grp Cap (vph)	108			1601	1618	
v/s Ratio Prot	c0.01				0.30	
v/s Ratio Perm				c0.34		
v/c Ratio	0.09			0.40	0.35	
Uniform Delay, d1	52.2			1.5	1.4	
Progression Factor	1.00			1.00	1.00	
Incremental Delay, d2	0.5			0.2	0.1	
Delay (s)	52.6			1.7	1.6	
Level of Service	D			A	A	
Approach Delay (s)	52.6			1.7	1.6	
Approach LOS	D			A	A	

Intersection Summary			
HCM Average Control Delay	2.2	HCM Level of Service	A
HCM Volume to Capacity ratio	0.38		
Actuated Cycle Length (s)	118.1	Sum of lost time (s)	8.0
Intersection Capacity Utilization	54.9%	ICU Level of Service	A
Analysis Period (min)	15		
c Critical Lane Group			

HCM Signalized Intersection Capacity Analysis
21: Waxpool Road & Pacific Blvd

Kincora
Total Future 2011

Movement	EBL	EBT	EBR	WBL	WBT	WBR	NBL	NBT	NBR	SBL	SBT	SBR
Lane Configurations												
Ideal Flow (vphpl)	1900	1900	1900	1900	1900	1900	1900	1900	1900	1900	1900	1900
Total Lost time (s)	3.0	3.0	3.0	3.0	3.0	3.0	3.0	3.0	3.0	3.0	3.0	3.0
Lane Util. Factor	0.97	0.86	1.00	0.97	0.86	1.00	0.97	0.95	1.00	0.97	0.95	1.00
Frt	1.00	1.00	0.85	1.00	1.00	0.85	1.00	1.00	0.85	1.00	1.00	0.85
Flt Protected	0.95	1.00	1.00	0.95	1.00	1.00	0.95	1.00	1.00	0.95	1.00	1.00
Satd. Flow (prot)	3433	6408	1583	3433	6408	1583	3433	3539	1583	3433	3539	1583
Flt Permitted	0.95	1.00	1.00	0.95	1.00	1.00	0.95	1.00	1.00	0.95	1.00	1.00
Satd. Flow (perm)	3433	6408	1583	3433	6408	1583	3433	3539	1583	3433	3539	1583
Volume (vph)	949	1688	40	20	1358	851	48	93	37	700	61	827
Peak-hour factor, PHF	0.95	0.95	0.95	0.95	0.95	0.95	0.95	0.95	0.95	0.95	0.95	0.95
Adj. Flow (vph)	999	1777	42	21	1429	896	51	98	39	737	64	871
RTOR Reduction (vph)	0	0	20	0	0	0	0	0	0	0	0	0
Lane Group Flow (vph)	999	1777	22	21	1429	896	51	98	39	737	64	871
Turn Type	Prot		Perm	Prot		Free	Prot		Free	Prot		Free
Protected Phases	1	6		5	2		7	4		3	8	
Permitted Phases			6			Free			Free			Free
Actuated Green, G (s)	42.6	72.8	72.8	3.0	33.2	145.0	6.5	7.3	145.0	33.9	34.7	145.0
Effective Green, g (s)	46.6	76.8	76.8	7.0	37.2	145.0	10.5	11.3	145.0	37.9	38.7	145.0
Actuated g/C Ratio	0.32	0.53	0.53	0.05	0.26	1.00	0.07	0.08	1.00	0.26	0.27	1.00
Clearance Time (s)	7.0	7.0	7.0	7.0	7.0		7.0	7.0		7.0	7.0	
Vehicle Extension (s)	2.0	3.0	3.0	2.0	3.0		3.0	3.0		3.0	3.0	
Lane Grp Cap (vph)	1103	3394	838	166	1644	1583	249	276	1583	897	945	1583
v/s Ratio Prot	c0.29	0.28		0.01	c0.22		0.01	0.03		c0.21	0.02	
v/s Ratio Perm			0.01			c0.57			0.02			0.55
v/c Ratio	0.91	0.52	0.03	0.13	0.87	0.57	0.20	0.36	0.02	0.82	0.07	0.55
Uniform Delay, d1	47.1	22.2	16.3	66.1	51.6	0.0	63.3	63.4	0.0	50.4	39.7	0.0
Progression Factor	1.00	1.00	1.00	1.00	1.00	1.00	1.00	1.00	1.00	1.00	1.00	1.00
Incremental Delay, d2	10.3	0.6	0.1	0.1	6.5	1.5	0.4	0.8	0.0	6.1	0.0	1.4
Delay (s)	57.4	22.8	16.3	66.2	58.1	1.5	63.7	64.2	0.0	56.5	39.7	1.4
Level of Service	E	C	B	E	E	A	E	E	A	E	D	A
Approach Delay (s)		35.0			36.6			50.8			27.1	
Approach LOS		C			D			D			C	

Intersection Summary			
HCM Average Control Delay	34.1	HCM Level of Service	C
HCM Volume to Capacity ratio	0.84		
Actuated Cycle Length (s)	145.0	Sum of lost time (s)	9.0
Intersection Capacity Utilization	83.4%	ICU Level of Service	E
Analysis Period (min)	15		
c Critical Lane Group			

HCM Signalized Intersection Capacity Analysis
5: Route 7 & Countryside Blvd.

Kincora
2011 Total Future

Movement	EBL	EBT	EBR	WBL	WBT	WBR	NBL	NBT	NBR	SBL	SBT	SBR
Lane Configurations												
Ideal Flow (vphpl)	1900	1900	1900	1900	1900	1900	1900	1900	1900	1900	1900	1900
Total Lost time (s)	3.0	3.0	3.0	3.0	3.0	3.0	3.0	3.0	3.0	3.0	3.0	3.0
Lane Util. Factor	0.97	0.86	1.00	0.97	0.86	1.00	0.97	0.95	1.00	0.97	0.95	1.00
Frt	1.00	1.00	0.85	1.00	1.00	0.85	1.00	1.00	0.85	1.00	1.00	0.85
Flt Protected	0.95	1.00	1.00	0.95	1.00	1.00	0.95	1.00	1.00	0.95	1.00	1.00
Satd. Flow (prot)	3433	6408	1583	3433	6408	1583	3433	3539	1583	3433	3539	1583
Flt Permitted	0.95	1.00	1.00	0.95	1.00	1.00	0.95	1.00	1.00	0.95	1.00	1.00
Satd. Flow (perm)	3433	6408	1583	3433	6408	1583	3433	3539	1583	3433	3539	1583
Volume (vph)	291	3009	99	101	1592	108	74	70	147	165	94	262
Peak-hour factor, PHF	0.95	0.95	0.95	0.95	0.95	0.95	0.95	0.95	0.95	0.95	0.95	0.95
Adj. Flow (vph)	306	3167	104	106	1676	114	78	74	155	174	99	276
RTOR Reduction (vph)	0	0	0	0	0	40	0	0	0	0	0	50
Lane Group Flow (vph)	306	3167	104	106	1676	74	78	74	155	174	99	226
Turn Type	Prot		Free	Prot		pm+ov	Prot		Free	Prot		pm+ov
Protected Phases	1	6		5	2	3	7	4		3	8	1
Permitted Phases			Free			2			Free			8
Actuated Green, G (s)	16.6	84.7	150.0	9.9	78.0	90.0	8.0	15.4	150.0	12.0	19.4	36.0
Effective Green, g (s)	20.6	88.7	150.0	13.9	82.0	98.0	12.0	19.4	150.0	16.0	23.4	44.0
Actuated g/C Ratio	0.14	0.59	1.00	0.09	0.55	0.65	0.08	0.13	1.00	0.11	0.16	0.29
Clearance Time (s)	7.0	7.0		7.0	7.0	7.0	7.0	7.0		7.0	7.0	7.0
Vehicle Extension (s)	2.0	2.0		3.0	2.0	2.0	2.0	2.0		2.0	2.0	2.0
Lane Grp Cap (vph)	471	3789	1583	318	3503	1066	275	458	1583	366	552	496
v/s Ratio Prot	c0.09	c0.49		0.03	0.26	0.01	0.02	0.02		c0.05	0.03	c0.06
v/s Ratio Perm			0.07			0.04			0.10			0.08
v/c Ratio	0.65	0.84	0.07	0.33	0.48	0.07	0.28	0.16	0.10	0.48	0.18	0.46
Uniform Delay, d1	61.3	24.8	0.0	63.7	20.9	9.4	65.0	58.1	0.0	63.1	55.0	43.2
Progression Factor	1.00	1.00	1.00	1.00	1.00	1.00	1.00	1.00	1.00	1.00	1.00	1.00
Incremental Delay, d2	2.3	2.3	0.1	0.6	0.5	0.0	0.2	0.1	0.1	0.4	0.1	0.2
Delay (s)	63.6	27.1	0.1	64.3	21.3	9.5	65.2	58.1	0.1	63.4	55.0	43.5
Level of Service	E	C	A	E	C	A	E	E	A	E	E	D
Approach Delay (s)		29.4			23.0			30.6			51.9	
Approach LOS		C			C			C			D	

Intersection Summary			
HCM Average Control Delay	29.5	HCM Level of Service	C
HCM Volume to Capacity ratio	0.71		
Actuated Cycle Length (s)	150.0	Sum of lost time (s)	6.0
Intersection Capacity Utilization	70.0%	ICU Level of Service	C
Analysis Period (min)	15		

c Critical Lane Group

HCM Signalized Intersection Capacity Analysis
6: Route 7 & Palisade Parkway

Kincora
2011 Total Future

Movement	EBL	EBT	EBR	WBL	WBT	WBR	NBL	NBT	NBR	SBL	SBT	SBR
Lane Configurations												
Ideal Flow (vphpl)	1900	1900	1900	1900	1900	1900	1900	1900	1900	1900	1900	1900
Total Lost time (s)	3.0	3.0	3.0	3.0	3.0	3.0	3.0	3.0	3.0	3.0	3.0	3.0
Lane Util. Factor	0.97	0.86	1.00	1.00	0.86	1.00	0.97	1.00	1.00	0.97	1.00	1.00
Frt	1.00	1.00	0.85	1.00	1.00	0.85	1.00	1.00	0.85	1.00	1.00	0.85
Flt Protected	0.95	1.00	1.00	0.95	1.00	1.00	0.95	1.00	1.00	0.95	1.00	1.00
Satd. Flow (prot)	3433	6408	1583	1770	6408	1583	3433	1863	1583	3433	1863	1583
Flt Permitted	0.95	1.00	1.00	0.95	1.00	1.00	0.95	1.00	1.00	0.95	1.00	1.00
Satd. Flow (perm)	3433	6408	1583	1770	6408	1583	3433	1863	1583	3433	1863	1583
Volume (vph)	162	2738	381	123	1521	73	58	34	42	131	82	208
Peak-hour factor, PHF	0.95	0.95	0.95	0.95	0.95	0.95	0.95	0.95	0.95	0.95	0.95	0.95
Adj. Flow (vph)	171	2882	401	129	1601	77	61	36	44	138	86	219
RTOR Reduction (vph)	0	0	0	0	0	0	0	0	23	0	0	51
Lane Group Flow (vph)	171	2882	401	129	1601	77	61	36	21	138	86	168
Turn Type	Prot		Free	Prot		Free	Split		pm+ov	Split		pm+ov
Protected Phases	1	6		5	2		4	4	5	3	3	1
Permitted Phases			Free			Free			4			3
Actuated Green, G (s)	11.0	77.1	135.0	13.6	79.7	135.0	6.2	6.2	19.8	10.1	10.1	21.1
Effective Green, g (s)	15.0	81.1	135.0	17.6	83.7	135.0	10.2	10.2	27.8	14.1	14.1	29.1
Actuated g/C Ratio	0.11	0.60	1.00	0.13	0.62	1.00	0.08	0.08	0.21	0.10	0.10	0.22
Clearance Time (s)	7.0	7.0		7.0	7.0		7.0	7.0	7.0	7.0	7.0	7.0
Vehicle Extension (s)	2.0	4.0		2.0	4.0		3.0	3.0	2.0	3.0	3.0	2.0
Lane Grp Cap (vph)	381	3850	1583	231	3973	1583	259	141	361	359	195	341
v/s Ratio Prot	0.05	c0.45		c0.07	0.25		0.02	0.02	0.01	0.04	0.05	c0.05
v/s Ratio Perm			c0.25			0.05			0.01			0.05
v/c Ratio	0.45	0.75	0.25	0.56	0.40	0.05	0.24	0.26	0.06	0.38	0.44	0.49
Uniform Delay, d1	56.1	19.6	0.0	55.1	13.0	0.0	58.7	58.8	43.1	56.4	56.8	46.5
Progression Factor	1.00	1.00	1.00	1.00	1.00	1.00	1.00	1.00	1.00	1.00	1.00	1.00
Incremental Delay, d2	0.3	1.4	0.4	1.7	0.3	0.1	0.5	1.0	0.0	0.7	1.6	0.4
Delay (s)	56.4	20.9	0.4	56.7	13.3	0.1	59.2	59.8	43.1	57.1	58.3	46.9
Level of Service	E	C	A	E	B	A	E	E	D	E	E	D
Approach Delay (s)		20.3			15.8			54.3			52.3	
Approach LOS		C			B			D			D	

Intersection Summary			
HCM Average Control Delay	22.2	HCM Level of Service	C
HCM Volume to Capacity ratio	0.64		
Actuated Cycle Length (s)	135.0	Sum of lost time (s)	9.0
Intersection Capacity Utilization	66.9%	ICU Level of Service	C
Analysis Period (min)	15		

c Critical Lane Group

HCM Signalized Intersection Capacity Analysis
7: Countryside Blvd. & Algonkian Parkway

Kincora
2011 Total Future

Movement	WBL	WBR	NBT	NBR	SBL	SBT
Lane Configurations						
Ideal Flow (vphpl)	1900	1900	1900	1900	1900	1900
Total Lost time (s)	3.0	3.0	3.0		3.0	3.0
Lane Util. Factor	1.00	1.00	0.95		1.00	0.95
Frt	1.00	0.85	0.97		1.00	1.00
Flt Protected	0.95	1.00	1.00		0.95	1.00
Satd. Flow (prot)	1770	1583	3440		1770	3539
Flt Permitted	0.95	1.00	1.00		0.44	1.00
Satd. Flow (perm)	1770	1583	3440		825	3539
Volume (vph)	89	191	304	70	159	561
Peak-hour factor, PHF	0.95	0.95	0.95	0.95	0.95	0.95
Adj. Flow (vph)	94	201	320	74	167	591
RTOR Reduction (vph)	0	123	17	0	0	0
Lane Group Flow (vph)	94	78	377	0	167	591
Turn Type		pm+ov			pm+pt	
Protected Phases	4	1	2		1	6
Permitted Phases		4			6	
Actuated Green, G (s)	4.9	12.4	18.5		33.0	33.0
Effective Green, g (s)	8.9	20.4	23.0		37.5	37.5
Actuated g/C Ratio	0.17	0.39	0.44		0.72	0.72
Clearance Time (s)	7.0	7.0	7.5		7.0	7.5
Vehicle Extension (s)	2.0	2.0	2.0		2.0	2.0
Lane Grp Cap (vph)	301	707	1510		798	2533
v/s Ratio Prot	c0.05	0.02	0.11		0.05	c0.17
v/s Ratio Perm		0.03			0.10	
v/c Ratio	0.31	0.11	0.25		0.21	0.23
Uniform Delay, d1	19.1	10.2	9.3		2.5	2.5
Progression Factor	1.00	1.00	1.00		1.00	1.00
Incremental Delay, d2	0.2	0.0	0.0		0.0	0.0
Delay (s)	19.3	10.2	9.3		2.6	2.6
Level of Service	B	B	A		A	A
Approach Delay (s)	13.1		9.3			2.6
Approach LOS	B		A			A

Intersection Summary

HCM Average Control Delay	6.5	HCM Level of Service	A
HCM Volume to Capacity ratio	0.25		
Actuated Cycle Length (s)	52.4	Sum of lost time (s)	6.0
Intersection Capacity Utilization	37.1%	ICU Level of Service	A
Analysis Period (min)	15		

c Critical Lane Group

HCM Signalized Intersection Capacity Analysis
8: Winding Road & Algonkian Parkway

Kincora
2011 Total Future

Movement	EBL	EBT	EBR	WBL	WBT	WBR	NBL	NBT	NBR	SBL	SBT	SBR
Lane Configurations												
Ideal Flow (vphpl)	1900	1900	1900	1900	1900	1900	1900	1900	1900	1900	1900	1900
Total Lost time (s)		4.0	4.0		4.0	4.0	4.0	4.0	4.0	4.0	4.0	4.0
Lane Util. Factor		1.00	1.00		1.00	1.00	1.00	0.95	1.00	1.00	0.95	1.00
Frt		1.00	0.85		1.00	0.85	1.00	1.00	0.85	1.00	1.00	0.85
Flt Protected		0.95	1.00		0.96	1.00	0.95	1.00	1.00	0.95	1.00	1.00
Satd. Flow (prot)		1778	1583		1783	1583	1770	3539	1583	1770	3539	1583
Flt Permitted		0.67	1.00		0.72	1.00	0.33	1.00	1.00	0.58	1.00	1.00
Satd. Flow (perm)		1257	1583		1335	1583	622	3539	1583	1075	3539	1583
Volume (vph)	41	2	145	71	9	38	35	271	15	9	695	39
Peak-hour factor, PHF	0.95	0.95	0.95	0.95	0.95	0.95	0.95	0.95	0.95	0.95	0.95	0.95
Adj. Flow (vph)	43	2	153	75	9	40	37	285	16	9	732	41
RTOR Reduction (vph)	0	0	132	0	0	35	0	0	5	0	0	14
Lane Group Flow (vph)	0	45	21	0	84	5	37	285	11	9	732	27
Turn Type	Perm		Perm	Perm		Perm	pm+pt		Perm	pm+pt		Perm
Protected Phases		4			8		5	2		1	6	
Permitted Phases	4		4	8		8	2		2	6		6
Actuated Green, G (s)		9.3	9.3		9.3	9.3	61.9	58.7	58.7	57.5	56.5	56.5
Effective Green, g (s)		12.3	12.3		12.3	12.3	67.9	61.7	61.7	63.5	59.5	59.5
Actuated g/C Ratio		0.14	0.14		0.14	0.14	0.75	0.69	0.69	0.71	0.88	0.66
Clearance Time (s)		7.0	7.0		7.0	7.0	7.0	7.0	7.0	7.0	7.0	7.0
Vehicle Extension (s)		2.0	2.0		2.0	2.0	2.0	2.0	2.0	2.0	2.0	2.0
Lane Grp Cap (vph)		172	216		182	216	548	2426	1085	789	2340	1047
v/s Ratio Prot							c0.00	0.08		0.00	c0.21	
v/s Ratio Perm		0.04	0.01		c0.06	0.00	0.05		0.01	0.01		0.02
v/c Ratio		0.26	0.10		0.46	0.03	0.07	0.12	0.01	0.01	0.31	0.03
Uniform Delay, d1		34.8	34.0		35.8	33.7	3.0	4.8	4.5	3.9	8.5	5.3
Progression Factor		1.00	1.00		1.00	1.00	1.00	1.00	1.00	1.00	1.00	1.00
Incremental Delay, d2		0.3	0.1		0.7	0.0	0.0	0.1	0.0	0.0	0.3	0.0
Delay (s)		35.1	34.1		36.5	33.7	3.0	4.9	4.5	3.9	6.9	5.3
Level of Service		D	C		D	C	A	A	A	A	A	A
Approach Delay (s)		34.3			35.6			4.7			6.7	
Approach LOS		C			D			A			A	

Intersection Summary

HCM Average Control Delay	12.5	HCM Level of Service	B
HCM Volume to Capacity ratio	0.33		
Actuated Cycle Length (s)	90.0	Sum of lost time (s)	16.0
Intersection Capacity Utilization	43.6%	ICU Level of Service	A
Analysis Period (min)	15		

c Critical Lane Group

Movement	EBL	EBT	EBR	WBL	WBT	WBR	NBL	NBT	NBR	SBL	SBT	SBR
Lane Configurations												
Ideal Flow (vphpl)	1900	1900	1900	1900	1900	1900	1900	1900	1900	1900	1900	1900
Total Lost time (s)	3.0	3.0	3.0	3.0	3.0	3.0	3.0	3.0	3.0	3.0	3.0	3.0
Lane Util. Factor	1.00	0.95	1.00	0.97	0.95	1.00	0.97	0.95	1.00	0.97	0.95	1.00
Frt	1.00	1.00	0.85	1.00	1.00	0.85	1.00	1.00	0.85	1.00	1.00	0.85
Flt Protected	0.95	1.00	1.00	0.95	1.00	1.00	0.95	1.00	1.00	0.95	1.00	1.00
Satd. Flow (prot)	1770	3539	1583	3433	3539	1583	3433	3539	1583	3433	3539	1583
Flt Permitted	0.95	1.00	1.00	0.95	1.00	1.00	0.95	1.00	1.00	0.95	1.00	1.00
Satd. Flow (perm)	1770	3539	1583	3433	3539	1583	3433	3539	1583	3433	3539	1583
Volume (vph)	123	362	272	226	138	157	144	424	319	318	379	35
Peak-hour factor, PHF	0.95	0.95	0.95	0.95	0.95	0.95	0.95	0.95	0.95	0.95	0.95	0.95
Adj. Flow (vph)	129	381	286	238	145	165	152	446	336	335	399	37
RTOR Reduction (vph)	0	0	0	0	0	0	0	0	0	0	0	0
Lane Group Flow (vph)	129	381	286	238	145	165	152	446	336	335	399	37
Turn Type	Prot		Free	Prot		Free	Prot		Free	Prot		Free
Protected Phases	7	4		3	8		5	2		1	6	
Permitted Phases			Free			Free			Free			Free
Actuated Green, G (s)	10.5	18.6	94.9	11.8	19.9	94.9	9.9	22.3	94.9	14.2	26.6	94.9
Effective Green, g (s)	14.5	22.6	94.9	15.8	23.9	94.9	13.9	26.3	94.9	18.2	30.6	94.9
Actuated g/C Ratio	0.15	0.24	1.00	0.17	0.25	1.00	0.15	0.28	1.00	0.19	0.32	1.00
Clearance Time (s)	7.0	7.0		7.0	7.0		7.0	7.0		7.0	7.0	
Vehicle Extension (s)	3.0	3.0		3.0	3.0		3.0	5.0		3.0	5.0	
Lane Grp Cap (vph)	270	843	1583	572	891	1583	503	981	1583	658	1141	1583
v/s Ratio Prot	c0.07	c0.11		0.07	0.04		0.04	c0.13		c0.10	0.11	
v/s Ratio Perm			0.18			0.10			c0.21			0.02
v/c Ratio	0.48	0.45	0.18	0.42	0.16	0.10	0.30	0.45	0.21	0.51	0.35	0.02
Uniform Delay, d1	36.7	30.9	0.0	35.4	27.7	0.0	36.2	28.4	0.0	34.3	24.6	0.0
Progression Factor	1.00	1.00	1.00	1.00	1.00	1.00	1.00	1.00	1.00	1.00	1.00	1.00
Incremental Delay, d2	1.3	0.4	0.3	0.5	0.1	0.1	0.3	0.7	0.3	0.6	0.4	0.0
Delay (s)	38.1	31.2	0.3	35.9	27.8	0.1	36.5	29.1	0.3	35.0	24.9	0.0
Level of Service	D	C	A	D	C	A	D	C	A	C	C	A
Approach Delay (s)		21.2			23.0			19.9			28.1	
Approach LOS		C			C			B			C	

Intersection Summary			
HCM Average Control Delay	22.9	HCM Level of Service	C
HCM Volume to Capacity ratio	0.47		
Actuated Cycle Length (s)	94.9	Sum of lost time (s)	12.0
Intersection Capacity Utilization	58.4%	ICU Level of Service	B
Analysis Period (min)	15		

c Critical Lane Group

Movement	EBL	EBR	NBL	NBT	SBT	SBR
Lane Configurations						
Ideal Flow (vphpl)	1900	1900	1900	1900	1900	1900
Total Lost time (s)	4.0			4.0	4.0	
Lane Util. Factor	1.00			1.00	1.00	
Frt	0.95			1.00	0.99	
Flt Protected	0.97			1.00	1.00	
Satd. Flow (prot)	1716			1861	1849	
Flt Permitted	0.97			0.98	1.00	
Satd. Flow (perm)	1716			1823	1849	
Volume (vph)	34	20	13	632	826	48
Peak-hour factor, PHF	0.95	0.95	0.95	0.95	0.95	0.95
Adj. Flow (vph)	36	21	14	665	869	51
RTOR Reduction (vph)	17	0	0	0	2	0
Lane Group Flow (vph)	40	0	0	679	918	0
Turn Type			Perm			
Protected Phases	4			2	6	
Permitted Phases			2			
Actuated Green, G (s)	9.0			72.5	72.5	
Effective Green, g (s)	12.0			75.5	75.5	
Actuated g/C Ratio	0.13			0.79	0.79	
Clearance Time (s)	7.0			7.0	7.0	
Vehicle Extension (s)	4.0			3.0	3.0	
Lane Grp Cap (vph)	216			1441	1462	
v/s Ratio Prot	c0.02				c0.50	
v/s Ratio Perm				0.37		
v/c Ratio	0.19			0.47	0.63	
Uniform Delay, d1	37.4			3.3	4.2	
Progression Factor	1.00			1.00	1.00	
Incremental Delay, d2	0.6			0.2	0.9	
Delay (s)	38.0			3.6	5.0	
Level of Service	D			A	A	
Approach Delay (s)	38.0			3.6	5.0	
Approach LOS	D			A	A	

Intersection Summary			
HCM Average Control Delay	5.6	HCM Level of Service	A
HCM Volume to Capacity ratio	0.57		
Actuated Cycle Length (s)	95.5	Sum of lost time (s)	8.0
Intersection Capacity Utilization	61.4%	ICU Level of Service	B
Analysis Period (min)	15		

c Critical Lane Group

Movement	EBL	EBT	EBR	WBL	WBT	WBR	NBL	NBT	NBR	SBL	SBT	SBR
Lane Configurations												
Ideal Flow (vphpl)	1900	1900	1900	1900	1900	1900	1900	1900	1900	1900	1900	1900
Total Lost time (s)	4.0	4.0	4.0	3.0	4.0	3.0	4.0	3.0	3.0	3.0	3.0	4.0
Lane Util. Factor	0.97	0.95	1.00	0.97	0.95	1.00	0.97	0.95	1.00	0.97	0.95	1.00
Frt	1.00	1.00	0.85	1.00	1.00	0.85	1.00	1.00	0.85	1.00	1.00	0.85
Flt Protected	0.95	1.00	1.00	0.95	1.00	1.00	0.95	1.00	1.00	0.95	1.00	1.00
Satd. Flow (prot)	3433	3539	1583	3433	3539	1583	3433	3539	1583	3433	3539	1583
Flt Permitted	0.95	1.00	1.00	0.95	1.00	1.00	0.95	1.00	1.00	0.95	1.00	1.00
Satd. Flow (perm)	3433	3539	1583	3433	3539	1583	3433	3539	1583	3433	3539	1583
Volume (vph)	217	295	469	121	314	32	378	86	112	33	178	116
Peak-hour factor, PHF	0.95	0.95	0.95	0.95	0.95	0.95	0.95	0.95	0.95	0.95	0.95	0.95
Adj. Flow (vph)	228	311	494	127	331	34	398	91	118	35	187	122
RTOR Reduction (vph)	0	0	0	0	0	0	0	0	77	0	0	0
Lane Group Flow (vph)	228	311	494	127	331	34	398	91	41	35	187	122
Turn Type	Prot		Free	Prot		Free	Prot		pm+ov	Prot		Free
Protected Phases	1	6		5	2		7	4	5	3	8	
Permitted Phases			Free			Free			4			Free
Actuated Green, G (s)	13.7	67.5	140.0	10.0	63.8	140.0	20.2	30.7	40.7	4.3	14.8	140.0
Effective Green, g (s)	16.7	70.5	140.0	14.0	66.8	140.0	23.2	34.2	48.2	8.3	18.3	140.0
Actuated g/C Ratio	0.12	0.50	1.00	0.10	0.48	1.00	0.17	0.24	0.34	0.06	0.13	1.00
Clearance Time (s)	7.0	7.0		7.0	7.0		7.0	6.5	7.0	7.0	6.5	
Vehicle Extension (s)	2.5	4.0		2.5	4.0		2.5	2.5	2.5	2.5	2.5	
Lane Grp Cap (vph)	410	1782	1583	343	1689	1583	569	865	579	204	463	1583
v/s Ratio Prot	c0.07	0.09		0.04	0.09		c0.12	0.03	0.01	0.01	c0.05	
v/s Ratio Perm			c0.31			0.02			0.02			0.08
v/c Ratio	0.56	0.17	0.31	0.37	0.20	0.02	0.70	0.11	0.07	0.17	0.40	0.08
Uniform Delay, d1	58.2	18.9	0.0	58.9	21.1	0.0	55.1	41.0	30.8	62.6	55.8	0.0
Progression Factor	1.00	1.00	1.00	1.00	1.00	1.00	1.00	1.00	1.00	1.00	1.00	1.00
Incremental Delay, d2	1.3	0.2	0.5	0.5	0.3	0.0	3.5	0.0	0.0	0.3	0.4	0.1
Delay (s)	59.5	19.1	0.5	59.4	21.4	0.0	58.6	41.1	30.9	62.9	56.3	0.1
Level of Service	E	B	A	E	C	A	E	D	C	E	E	A
Approach Delay (s)		19.1			29.7			50.6			37.0	
Approach LOS		B			C			D			D	

Intersection Summary			
HCM Average Control Delay	31.4	HCM Level of Service	C
HCM Volume to Capacity ratio	0.43		
Actuated Cycle Length (s)	140.0	Sum of lost time (s)	11.0
Intersection Capacity Utilization	47.7%	ICU Level of Service	A
Analysis Period (min)	15		

c Critical Lane Group

Movement	EBL	EBT	EBR	WBL	WBT	WBR	NBL	NBT	NBR	SBL	SBT	SBR
Lane Configurations												
Ideal Flow (vphpl)	1900	1900	1900	1900	1900	1900	1900	1900	1900	1900	1900	1900
Total Lost time (s)	3.0	3.0	3.0	3.0	3.0	3.0	3.0	3.0	3.0	3.0	3.0	3.0
Lane Util. Factor	0.97	1.00	1.00	1.00	0.95	1.00	0.97	0.95	1.00	1.00	0.95	1.00
Frt	1.00	1.00	0.85	1.00	1.00	0.85	1.00	1.00	0.85	1.00	1.00	0.85
Flt Protected	0.95	1.00	1.00	0.95	1.00	1.00	0.95	1.00	1.00	0.95	1.00	1.00
Satd. Flow (prot)	3433	1863	1583	1770	3539	1583	3433	3539	1583	1770	3539	1583
Flt Permitted	0.95	1.00	1.00	0.95	1.00	1.00	0.95	1.00	1.00	0.95	1.00	1.00
Satd. Flow (perm)	3433	1863	1583	1770	3539	1583	3433	3539	1583	1770	3539	1583
Volume (vph)	72	60	79	190	232	18	161	611	220	4	666	116
Peak-hour factor, PHF	0.95	0.95	0.95	0.95	0.95	0.95	0.95	0.95	0.95	0.95	0.95	0.95
Adj. Flow (vph)	76	63	83	200	244	19	169	643	232	4	701	122
RTOR Reduction (vph)	0	0	73	0	0	15	0	0	115	0	0	72
Lane Group Flow (vph)	76	63	10	200	244	4	169	643	117	4	701	50
Turn Type	Prot		Perm	Prot		Perm	Prot		Perm	Prot		Perm
Protected Phases	7	4		3	8		1	6		5	2	
Permitted Phases			4			8			6			2
Actuated Green, G (s)	7.6	7.9	7.9	16.6	16.9	16.9	11.3	47.9	47.9	1.6	38.2	38.2
Effective Green, g (s)	11.6	12.9	12.9	20.6	21.9	21.9	15.3	52.4	52.4	5.6	42.7	42.7
Actuated g/C Ratio	0.11	0.12	0.12	0.20	0.21	0.21	0.15	0.51	0.51	0.05	0.41	0.41
Clearance Time (s)	7.0	8.0	8.0	7.0	8.0	8.0	7.0	7.5	7.5	7.0	7.5	7.5
Vehicle Extension (s)	3.0	3.0	3.0	3.0	3.0	3.0	3.0	3.0	3.0	3.0	3.0	3.0
Lane Grp Cap (vph)	385	232	197	352	749	335	507	1792	801	96	1460	653
v/s Ratio Prot	0.02	0.03		c0.11	c0.07		c0.05	0.18		0.00	c0.20	
v/s Ratio Perm			0.01			0.00			0.07			0.03
v/c Ratio	0.20	0.27	0.05	0.57	0.33	0.01	0.33	0.36	0.15	0.04	0.48	0.08
Uniform Delay, d1	41.7	41.0	39.9	37.4	34.5	32.2	39.5	15.4	13.6	46.4	22.3	18.4
Progression Factor	1.00	1.00	1.00	1.00	1.00	1.00	1.00	1.00	1.00	1.00	1.00	1.00
Incremental Delay, d2	0.3	0.6	0.1	2.1	0.3	0.0	0.4	0.1	0.1	0.2	0.3	0.1
Delay (s)	42.0	41.7	40.0	39.5	34.8	32.3	39.9	15.5	13.7	46.6	22.5	18.5
Level of Service	D	D	D	D	C	C	D	B	B	D	C	B
Approach Delay (s)		41.2			36.7			19.1			22.0	
Approach LOS		D			D			B			C	

Intersection Summary			
HCM Average Control Delay	25.2	HCM Level of Service	C
HCM Volume to Capacity ratio	0.45		
Actuated Cycle Length (s)	103.5	Sum of lost time (s)	9.0
Intersection Capacity Utilization	65.5%	ICU Level of Service	C
Analysis Period (min)	15		

c Critical Lane Group

Movement	EBL	EBR	NBL	NBT	SBT	SBR
Lane Configurations						
Ideal Flow (vphpl)	1900	1900	1900	1900	1900	1900
Total Lost time (s)	3.0	3.0	3.0	3.0	3.0	3.0
Lane Util. Factor	1.00	1.00	1.00	0.95	0.95	1.00
Frt	1.00	0.85	1.00	1.00	1.00	0.85
Flt Protected	0.95	1.00	0.95	1.00	1.00	1.00
Satd. Flow (prot)	1770	1583	1770	3539	3539	1583
Flt Permitted	0.95	1.00	0.26	1.00	1.00	1.00
Satd. Flow (perm)	1770	1583	476	3539	3539	1583
Volume (vph)	97	54	172	986	751	142
Peak-hour factor, PHF	0.95	0.95	0.95	0.95	0.95	0.95
Adj. Flow (vph)	102	57	181	1038	791	149
RTOR Reduction (vph)	0	47	0	0	0	47
Lane Group Flow (vph)	102	10	181	1038	791	102
Turn Type		Perm	pm+pt			pm+ov
Protected Phases	4		1	6	2	4
Permitted Phases		4	6			2
Actuated Green, G (s)	7.9	7.9	43.7	43.7	29.1	37.0
Effective Green, g (s)	11.9	11.9	47.2	47.2	32.6	44.5
Actuated g/C Ratio	0.18	0.18	0.73	0.73	0.50	0.68
Clearance Time (s)	7.0	7.0	7.0	6.5	6.5	7.0
Vehicle Extension (s)	3.0	3.0	4.0	4.0	4.0	3.0
Lane Grp Cap (vph)	324	289	576	2566	1772	1155
v/s Ratio Prot	c0.06		0.06	c0.29	c0.22	0.02
v/s Ratio Perm		0.01	0.17			0.05
v/c Ratio	0.31	0.04	0.31	0.40	0.45	0.09
Uniform Delay, d1	23.1	21.9	3.8	3.5	10.4	3.5
Progression Factor	1.00	1.00	1.00	1.00	1.00	1.00
Incremental Delay, d2	0.6	0.1	0.4	0.1	0.2	0.0
Delay (s)	23.6	21.9	4.2	3.6	10.7	3.5
Level of Service	C	C	A	A	B	A
Approach Delay (s)	23.0			3.7	9.6	
Approach LOS	C			A	A	

Intersection Summary			
HCM Average Control Delay	7.4	HCM Level of Service	A
HCM Volume to Capacity ratio	0.41		
Actuated Cycle Length (s)	65.1	Sum of lost time (s)	9.0
Intersection Capacity Utilization	45.7%	ICU Level of Service	A
Analysis Period (min)	15		

c Critical Lane Group

Movement	EBL	EBT	EBR	WBL	WBT	WBR	NBL	NBT	NBR	SBL	SBT	SBR
Lane Configurations												
Ideal Flow (vphpl)	1900	1900	1900	1900	1900	1900	1900	1900	1900	1900	1900	1900
Total Lost time (s)	3.0	3.0	3.0	3.0	3.0	3.0	3.0	3.0	3.0	3.0	3.0	3.0
Lane Util. Factor	1.00	0.91	1.00	1.00	0.91	1.00	1.00	0.95	1.00	0.97	0.95	1.00
Frt	1.00	1.00	0.85	1.00	1.00	0.85	1.00	1.00	0.85	1.00	1.00	0.85
Flt Protected	0.95	1.00	1.00	0.95	1.00	1.00	0.95	1.00	1.00	0.95	1.00	1.00
Satd. Flow (prot)	1770	5085	1583	1770	5085	1583	1770	3539	1583	3433	3539	1583
Flt Permitted	0.95	1.00	1.00	0.95	1.00	1.00	0.95	1.00	1.00	0.95	1.00	1.00
Satd. Flow (perm)	1770	5085	1583	1770	5085	1583	1770	3539	1583	3433	3539	1583
Volume (vph)	148	1285	252	103	418	381	62	227	110	784	535	413
Peak-hour factor, PHF	0.95	0.95	0.95	0.95	0.95	0.95	0.95	0.95	0.95	0.95	0.95	0.95
Adj. Flow (vph)	156	1353	265	108	440	401	65	239	116	825	563	435
RTOR Reduction (vph)	0	0	0	0	0	0	0	0	8	0	0	78
Lane Group Flow (vph)	156	1353	265	108	440	401	65	239	108	825	563	357
Turn Type	Prot		Free	Prot		Free	Prot		pm+ov	Prot		pm+ov
Protected Phases	1	6		5	2		3	8	5	7	4	1
Permitted Phases			Free			Free			8			4
Actuated Green, G (s)	16.4	42.7	130.0	13.7	40.0	130.0	4.8	14.1	27.8	32.0	41.3	57.7
Effective Green, g (s)	20.4	46.7	130.0	17.7	44.0	130.0	8.8	17.6	35.3	36.0	44.8	65.2
Actuated g/C Ratio	0.16	0.36	1.00	0.14	0.34	1.00	0.07	0.14	0.27	0.28	0.34	0.50
Clearance Time (s)	7.0	7.0		7.0	7.0		7.0	6.5	7.0	7.0	6.5	7.0
Vehicle Extension (s)	2.0	3.0		2.0	3.0		2.0	2.0	2.0	2.0	2.0	2.0
Lane Grp Cap (vph)	278	1827	1583	241	1721	1583	120	479	466	951	1220	830
v/s Ratio Prot	c0.09	c0.27		0.06	0.09		0.04	0.07	0.03	c0.24	c0.16	0.07
v/s Ratio Perm			0.17			c0.25			0.04			0.16
v/c Ratio	0.56	0.74	0.17	0.45	0.26	0.25	0.54	0.50	0.23	0.87	0.46	0.43
Uniform Delay, d1	50.7	36.4	0.0	51.7	31.1	0.0	58.6	52.1	36.8	44.7	33.2	20.6
Progression Factor	1.00	1.00	1.00	0.83	0.78	1.00	1.00	1.00	1.00	1.00	1.00	1.00
Incremental Delay, d2	1.5	2.7	0.2	0.5	0.4	0.4	2.7	0.3	0.1	8.2	0.1	0.1
Delay (s)	52.2	39.1	0.2	43.4	24.6	0.4	61.3	52.4	36.9	52.9	33.3	20.7
Level of Service	D	D	A	D	C	A	E	D	D	D	C	C
Approach Delay (s)		34.5			16.5			49.5			39.2	
Approach LOS		C			B			D			D	

Intersection Summary			
HCM Average Control Delay	34.0	HCM Level of Service	C
HCM Volume to Capacity ratio	0.69		
Actuated Cycle Length (s)	130.0	Sum of lost time (s)	6.0
Intersection Capacity Utilization	72.5%	ICU Level of Service	C
Analysis Period (min)	15		

c Critical Lane Group

Movement	EBL	EBT	EBR	WBL	WBT	WBR	NBL	NBT	NBR	SBL	SBT	SBR
Lane Configurations												
Ideal Flow (vphpl)	1900	1900	1900	1900	1900	1900	1900	1900	1900	1900	1900	1900
Total Lost time (s)	3.0	3.0	3.0	3.0	3.0	3.0	3.0	3.0	3.0	3.0	3.0	
Lane Util. Factor	1.00	0.91	1.00	1.00	0.91	1.00	1.00	0.95	1.00	1.00	0.95	
Frt	1.00	1.00	0.85	1.00	1.00	0.85	1.00	1.00	0.85	1.00	0.91	
Flt Protected	0.95	1.00	1.00	0.95	1.00	1.00	0.95	1.00	1.00	0.95	1.00	
Satd. Flow (prot)	1770	5085	1583	1770	5085	1583	1770	3539	1583	1770	3227	
Flt Permitted	0.95	1.00	1.00	0.95	1.00	1.00	0.73	1.00	1.00	0.55	1.00	
Satd. Flow (perm)	1770	5085	1583	1770	5085	1583	1367	3539	1583	1028	3227	
Volume (vph)	57	2103	43	247	792	112	24	55	113	92	13	19
Peak-hour factor, PHF	0.95	0.95	0.95	0.95	0.95	0.95	0.95	0.95	0.95	0.95	0.95	0.95
Adj. Flow (vph)	60	2214	45	260	834	118	25	58	119	97	14	20
RTOR Reduction (vph)	0	0	20	0	0	29	0	0	0	0	17	0
Lane Group Flow (vph)	60	2214	25	260	834	89	25	58	119	97	17	0
Turn Type	Prot		pm+ov	Prot		pm+ov	pm+pt		Free	pm+pt		
Protected Phases	1	6	3	5	2	7	3	8		7	4	
Permitted Phases			6			2	8		Free	4		
Actuated Green, G (s)	5.6	62.7	65.9	22.5	79.1	92.9	9.7	6.5	130.0	25.3	17.1	
Effective Green, g (s)	9.6	66.2	71.4	26.0	82.6	98.4	15.2	10.0	130.0	28.8	20.6	
Actuated g/C Ratio	0.07	0.51	0.55	0.20	0.64	0.76	0.12	0.08	1.00	0.22	0.16	
Clearance Time (s)	7.0	6.5	5.0	6.5	6.5	5.0	5.0	6.5		5.0	6.5	
Vehicle Extension (s)	2.0	3.0	2.0	2.0	3.0	2.0	2.0	2.0		2.0	2.0	
Lane Grp Cap (vph)	131	2589	906	354	3231	1235	176	272	1583	318	511	
v/s Ratio Prot	0.03	c0.44	0.00	c0.15	0.16	0.01	0.01	0.02		c0.04	0.01	
v/s Ratio Perm			0.01			0.05	0.01		0.08	c0.03		
v/c Ratio	0.46	0.86	0.03	0.73	0.26	0.07	0.14	0.21	0.08	0.31	0.03	
Uniform Delay, d1	57.7	27.7	13.4	48.8	10.3	4.1	51.4	56.3	0.0	41.7	46.3	
Progression Factor	1.09	0.67	0.18	1.00	1.00	1.00	1.00	1.00	1.00	1.00	1.00	
Incremental Delay, d2	0.6	2.6	0.0	6.7	0.2	0.0	0.1	0.1	0.1	0.2	0.1	
Delay (s)	63.7	21.2	2.4	55.4	10.5	4.1	51.6	56.5	0.1	41.9	46.4	
Level of Service	E	C	A	E	B	A	D	E	A	D	D	
Approach Delay (s)		21.9			19.5			22.6			43.1	
Approach LOS		C			B			C			D	

Intersection Summary			
HCM Average Control Delay	21.9	HCM Level of Service	C
HCM Volume to Capacity ratio	0.70		
Actuated Cycle Length (s)	130.0	Sum of lost time (s)	9.0
Intersection Capacity Utilization	76.1%	ICU Level of Service	D
Analysis Period (min)	15		

c Critical Lane Group

Movement	EBL	EBT	EBR	WBL	WBT	WBR	NBL	NBT	NBR	SBL	SBT	SBR
Lane Configurations												
Ideal Flow (vphpl)	1900	1900	1900	1900	1900	1900	1900	1900	1900	1900	1900	1900
Total Lost time (s)	3.0	3.0	3.0	3.0	3.0	3.0	3.0	3.0	3.0	3.0	3.0	3.0
Lane Util. Factor	0.97	0.86	1.00	0.97	0.86	1.00	0.97	0.95	1.00	0.97	0.95	1.00
Frt	1.00	1.00	0.85	1.00	1.00	0.85	1.00	1.00	0.85	1.00	1.00	0.85
Flt Protected	0.95	1.00	1.00	0.95	1.00	1.00	0.95	1.00	1.00	0.95	1.00	1.00
Satd. Flow (prot)	3433	6408	1583	3433	6408	1583	3433	3539	1583	3433	3539	1583
Flt Permitted	0.95	1.00	1.00	0.95	1.00	1.00	0.95	1.00	1.00	0.95	1.00	1.00
Satd. Flow (perm)	3433	6408	1583	3433	6408	1583	3433	3539	1583	3433	3539	1583
Volume (vph)	489	3185	199	432	2206	300	81	44	76	154	68	155
Peak-hour factor, PHF	0.95	0.95	0.95	0.95	0.95	0.95	0.95	0.95	0.95	0.95	0.95	0.95
Adj. Flow (vph)	515	3353	209	455	2322	316	85	46	80	162	72	163
RTOR Reduction (vph)	0	0	84	0	0	0	0	0	0	0	0	0
Lane Group Flow (vph)	515	3353	125	455	2322	316	85	46	80	162	72	163
Turn Type	Prot		Perm	Prot		Free	Prot		Free	Prot		Free
Protected Phases	1	6		5	2		7	4		3	8	
Permitted Phases			6			Free			Free			Free
Actuated Green, G (s)	24.2	82.4	82.4	20.3	78.5	145.0	6.0	4.8	145.0	9.5	8.3	145.0
Effective Green, g (s)	28.2	86.4	86.4	24.3	82.5	145.0	10.0	8.8	145.0	13.5	12.3	145.0
Actuated g/C Ratio	0.19	0.60	0.60	0.17	0.57	1.00	0.07	0.06	1.00	0.09	0.08	1.00
Clearance Time (s)	7.0	7.0	7.0	7.0	7.0		7.0	7.0		7.0	7.0	
Vehicle Extension (s)	2.0	3.0	3.0	2.0	3.0		3.0	3.0		3.0	3.0	
Lane Grp Cap (vph)	668	3818	943	575	3646	1583	237	215	1583	320	300	1583
v/s Ratio Prot	c0.15	c0.52		c0.13	0.36		0.02	0.01		c0.05	c0.02	
v/s Ratio Perm			0.08			0.20			0.05			0.10
v/c Ratio	0.77	0.88	0.13	0.79	0.64	0.20	0.36	0.21	0.05	0.51	0.24	0.10
Uniform Delay, d1	55.3	24.8	12.9	57.9	21.1	0.0	64.4	64.8	0.0	62.6	62.0	0.0
Progression Factor	1.00	1.00	1.00	1.00	1.00	1.00	1.00	1.00	1.00	1.00	1.00	1.00
Incremental Delay, d2	5.0	3.2	0.3	6.9	0.9	0.3	0.9	0.5	0.1	1.3	0.4	0.1
Delay (s)	60.4	28.1	13.1	64.8	22.0	0.3	65.4	65.3	0.1	63.8	62.4	0.1
Level of Service	E	C	B	E	C	A	E	E	A	E	E	A
Approach Delay (s)		31.4			26.1			40.6			37.4	
Approach LOS		C			C			D			D	

Intersection Summary			
HCM Average Control Delay	29.8	HCM Level of Service	C
HCM Volume to Capacity ratio	0.76		
Actuated Cycle Length (s)	145.0	Sum of lost time (s)	6.0
Intersection Capacity Utilization	79.5%	ICU Level of Service	D
Analysis Period (min)	15		

c Critical Lane Group

Movement	EBL	EBT	EBR	WBL	WBT	WBR	NBL	NBT	NBR	SBL	SBT	SBR
Lane Configurations												
Ideal Flow (vphpl)	1900	1900	1900	1900	1900	1900	1900	1900	1900	1900	1900	1900
Total Lost time (s)		3.0		3.0	3.0			3.0	3.0		3.0	
Lane Util. Factor		0.95		1.00	0.95			1.00	1.00		1.00	
Frt		0.98		1.00	1.00			1.00	0.85		0.91	
Flt Protected		1.00		0.95	1.00			0.95	1.00		0.99	
Satd. Flow (prot)		3450		1770	3536			1776	1583		1676	
Flt Permitted		0.91		0.10	1.00			0.95	1.00		0.99	
Satd. Flow (perm)		3145		191	3536			1776	1583		1676	
Volume (vph)	24	957	188	218	1125	7	118	3	144	4	3	14
Peak-hour factor, PHF	0.95	0.95	0.95	0.95	0.95	0.95	0.95	0.95	0.95	0.95	0.95	0.95
Adj. Flow (vph)	25	1007	198	229	1184	7	124	3	152	4	3	15
RTOR Reduction (vph)	0	14	0	0	0	0	0	0	0	0	14	0
Lane Group Flow (vph)	0	1216	0	229	1191	0	0	127	152	0	8	0
Turn Type	Perm			pm+pt			Split		pm+ov	Split		
Protected Phases		6		5	2		4	4	5	8	8	
Permitted Phases	6			2					4			
Actuated Green, G (s)		35.2		50.0	50.0			8.3	17.6		2.3	
Effective Green, g (s)		38.2		53.0	53.0			11.3	23.1		5.3	
Actuated g/C Ratio		0.49		0.67	0.67			0.14	0.29		0.07	
Clearance Time (s)		6.0		5.5	6.0			6.0	5.5		6.0	
Vehicle Extension (s)		4.0		2.0	4.0			3.0	2.0		3.0	
Lane Grp Cap (vph)		1528		366	2384			255	465		113	
v/s Ratio Prot				c0.09	0.34			c0.07	0.05		c0.00	
v/s Ratio Perm		c0.39		0.33					0.05			
v/c Ratio		0.80		0.63	0.50			0.50	0.33		0.07	
Uniform Delay, d1		16.9		14.2	6.3			31.0	21.7		34.3	
Progression Factor		1.00		1.00	1.00			1.00	1.00		1.00	
Incremental Delay, d2		3.1		2.4	0.2			1.5	0.2		0.3	
Delay (s)		20.1		16.6	6.5			32.6	21.8		34.6	
Level of Service		C		B	A			C	C		C	
Approach Delay (s)		20.1			8.1			26.7			34.6	
Approach LOS		C			A			C			C	

Intersection Summary			
HCM Average Control Delay	15.1	HCM Level of Service	B
HCM Volume to Capacity ratio	0.66		
Actuated Cycle Length (s)	78.6	Sum of lost time (s)	12.0
Intersection Capacity Utilization	87.8%	ICU Level of Service	E
Analysis Period (min)	15		

c Critical Lane Group

Movement	EBL	EBT	WBT	WBR	SBL	SBR
Lane Configurations						
Ideal Flow (vphpl)	1900	1900	1900	1900	1900	1900
Total Lost time (s)	3.0	3.0	3.0	3.0	3.0	3.0
Lane Util. Factor	0.97	0.95	0.91	0.91	0.97	1.00
Frt	1.00	1.00	1.00	0.85	1.00	0.85
Flt Protected	0.95	1.00	1.00	1.00	0.95	1.00
Satd. Flow (prot)	3433	3539	3390	1441	3433	1583
Flt Permitted	0.95	1.00	1.00	1.00	0.95	1.00
Satd. Flow (perm)	3433	3539	3390	1441	3433	1583
Volume (vph)	659	427	426	362	286	538
Peak-hour factor, PHF	0.95	0.95	0.95	0.95	0.95	0.95
Adj. Flow (vph)	694	449	448	381	301	566
RTOR Reduction (vph)	0	0	0	28	0	416
Lane Group Flow (vph)	694	449	448	353	301	150
Turn Type	Prot			pm+ov		Perm
Protected Phases	5	2	6	4	4	
Permitted Phases				6		4
Actuated Green, G (s)	19.0	43.7	17.7	32.6	14.9	14.9
Effective Green, g (s)	23.0	47.7	21.7	41.1	19.4	19.4
Actuated g/C Ratio	0.31	0.65	0.30	0.56	0.27	0.27
Clearance Time (s)	7.0	7.0	7.0	7.5	7.5	7.5
Vehicle Extension (s)	2.0	3.0	3.0	3.0	3.0	3.0
Lane Grp Cap (vph)	1080	2309	1006	869	911	420
v/s Ratio Prot	c0.20	0.13	c0.13	c0.11	0.09	
v/s Ratio Perm				0.14		0.09
v/c Ratio	0.64	0.19	0.45	0.41	0.33	0.36
Uniform Delay, d1	21.5	5.1	20.8	9.1	21.6	21.8
Progression Factor	1.00	1.00	1.00	1.00	1.00	1.00
Incremental Delay, d2	1.0	0.0	0.3	0.3	0.2	0.5
Delay (s)	22.5	5.1	21.1	9.4	21.8	22.3
Level of Service	C	A	C	A	C	C
Approach Delay (s)		15.7	15.7		22.1	
Approach LOS		B	B		C	

Intersection Summary			
HCM Average Control Delay	17.7	HCM Level of Service	B
HCM Volume to Capacity ratio	0.50		
Actuated Cycle Length (s)	73.1	Sum of lost time (s)	6.0
Intersection Capacity Utilization	55.6%	ICU Level of Service	B
Analysis Period (min)	15		

c Critical Lane Group

HCM Signalized Intersection Capacity Analysis
24: Pacific Boulevard & Loudoun County Parkway

Kincora
2011 Total Future

Movement	EBL	EBT	EBR	WBL	WBT	WBR	NBL	NBT	NBR	SBL	SBT	SBR
Lane Configurations												
Ideal Flow (vphpl)	1900	1900	1900	1900	1900	1900	1900	1900	1900	1900	1900	1900
Total Lost time (s)		4.0	4.0	4.0		4.0	4.0	4.0	4.0	4.0	4.0	4.0
Lane Util. Factor		1.00	1.00	1.00		1.00	1.00	0.95	1.00	1.00	0.95	1.00
Frt		1.00	0.85	1.00		0.85	1.00	1.00	0.85	1.00	1.00	0.85
Flt Protected		0.95	1.00	0.95		1.00	0.95	1.00	1.00	0.95	1.00	1.00
Satd. Flow (prot)		1770	1583	1770		1583	1770	3539	1583	1770	3539	1583
Flt Permitted		0.76	1.00	0.74		1.00	0.95	1.00	1.00	0.95	1.00	1.00
Satd. Flow (perm)		1410	1583	1377		1583	1770	3539	1583	1770	3539	1583
Volume (vph)	27	0	36	9	0	26	44	636	63	190	657	49
Peak-hour factor, PHF	0.95	0.95	0.95	0.95	0.95	0.95	0.95	0.95	0.95	0.95	0.95	0.95
Adj. Flow (vph)	28	0	38	9	0	27	46	669	66	200	692	52
RTOR Reduction (vph)	0	0	33	0	0	24	0	0	34	0	0	21
Lane Group Flow (vph)	0	28	5	9	0	3	46	669	32	200	692	31
Turn Type	Perm		Perm	Perm		Perm	Prot		Perm	Prot		Perm
Protected Phases		4			8		5	2		1	6	
Permitted Phases	4		4	8		8			2			6
Actuated Green, G (s)		5.2	5.2	5.2		5.2	2.6	28.7	28.7	9.8	35.9	35.9
Effective Green, g (s)		8.2	8.2	8.2		8.2	5.6	31.7	31.7	12.8	38.9	38.9
Actuated g/C Ratio		0.13	0.13	0.13		0.13	0.09	0.49	0.49	0.20	0.60	0.60
Clearance Time (s)		7.0	7.0	7.0		7.0	7.0	7.0	7.0	7.0	7.0	7.0
Vehicle Extension (s)		3.0	3.0	3.0		3.0	2.0	3.0	3.0	2.0	3.0	3.0
Lane Grp Cap (vph)		179	201	175		201	153	1734	776	350	2128	952
v/s Ratio Prot							0.03	c0.19		c0.11	0.20	
v/s Ratio Perm		c0.02	0.00	0.01		0.00			0.02			0.02
v/c Ratio		0.16	0.02	0.05		0.02	0.30	0.39	0.04	0.57	0.33	0.03
Uniform Delay, d1		25.2	24.7	24.8		24.7	27.7	10.4	8.6	23.5	6.4	5.2
Progression Factor		1.00	1.00	1.00		1.00	1.00	1.00	1.00	1.00	1.00	1.00
Incremental Delay, d2		0.4	0.0	0.1		0.0	0.4	0.1	0.0	1.4	0.1	0.0
Delay (s)		25.6	24.8	25.0		24.8	28.1	10.5	8.6	24.9	6.5	5.3
Level of Service		C	C	C		C	C	B	A	C	A	A
Approach Delay (s)		25.1			24.8			11.4			10.3	
Approach LOS		C			C			B			B	

Intersection Summary

HCM Average Control Delay	11.6	HCM Level of Service	B
HCM Volume to Capacity ratio	0.40		
Actuated Cycle Length (s)	64.7	Sum of lost time (s)	12.0
Intersection Capacity Utilization	46.4%	ICU Level of Service	A
Analysis Period (min)	15		

c Critical Lane Group

HCM Signalized Intersection Capacity Analysis
26: Gloucester Pkwy & Pacific Boulevard

Kincora
2011 Total Future

Movement	WBL	WBR	NBT	NBR	SBL	SBT
Lane Configurations						
Ideal Flow (vphpl)	1900	1900	1900	1900	1900	1900
Total Lost time (s)	4.0	4.0	4.0		4.0	4.0
Lane Util. Factor	1.00	1.00	1.00		1.00	1.00
Frt	1.00	0.85	0.99		1.00	1.00
Flt Protected	0.95	1.00	1.00		0.95	1.00
Satd. Flow (prot)	1770	1583	1851		1770	1863
Flt Permitted	0.95	1.00	1.00		0.49	1.00
Satd. Flow (perm)	1770	1583	1851		910	1863
Volume (vph)	231	490	340	16	212	116
Peak-hour factor, PHF	0.95	0.95	0.95	0.95	0.95	0.95
Adj. Flow (vph)	243	516	358	17	223	122
RTOR Reduction (vph)	0	338	2	0	0	0
Lane Group Flow (vph)	243	178	373	0	223	122
Turn Type		Perm			Perm	
Protected Phases	8		2			6
Permitted Phases		8			6	
Actuated Green, G (s)	10.2	10.2	14.0		14.0	14.0
Effective Green, g (s)	13.2	13.2	17.0		17.0	17.0
Actuated g/C Ratio	0.35	0.35	0.45		0.45	0.45
Clearance Time (s)	7.0	7.0	7.0		7.0	7.0
Vehicle Extension (s)	2.0	2.0	2.0		2.0	2.0
Lane Grp Cap (vph)	612	547	824		405	829
v/s Ratio Prot	c0.14		0.20			0.07
v/s Ratio Perm		0.11			c0.24	
v/c Ratio	0.40	0.33	0.45		0.55	0.15
Uniform Delay, d1	9.5	9.2	7.4		7.8	6.3
Progression Factor	1.00	1.00	1.00		1.00	1.00
Incremental Delay, d2	0.2	0.1	0.1		0.9	0.0
Delay (s)	9.6	9.3	7.5		8.7	6.3
Level of Service	A	A	A		A	A
Approach Delay (s)	9.4		7.5			7.9
Approach LOS	A		A			A

Intersection Summary

HCM Average Control Delay	8.6	HCM Level of Service	A
HCM Volume to Capacity ratio	0.48		
Actuated Cycle Length (s)	38.2	Sum of lost time (s)	8.0
Intersection Capacity Utilization	55.9%	ICU Level of Service	B
Analysis Period (min)	15		

c Critical Lane Group

Movement	EBL	EBT	WBT	WBR	SWL	SWR
Lane Configurations		↑↑	↑↑			↱↑
Sign Control		Free	Free		Stop	
Grade		0%	0%		0%	
Volume (veh/h)	0	275	384	0	0	464
Peak Hour Factor	0.95	0.95	0.95	0.95	0.95	0.95
Hourly flow rate (vph)	0	289	404	0	0	488
Pedestrians						
Lane Width (ft)						
Walking Speed (ft/s)						
Percent Blockage						
Right turn flare (veh)						
Median type					None	
Median storage veh)						
Upstream signal (ft)		411				
pX, platoon unblocked						
vC, conflicting volume	404				549	202
vC1, stage 1 conf vol						
vC2, stage 2 conf vol						
vCu, unblocked vol	404				549	202
tC, single (s)	4.1				6.8	6.9
tC, 2 stage (s)						
tF (s)	2.2				3.5	3.3
p0 queue free %	100				100	39
cM capacity (veh/h)	1151				466	805

Direction, Lane #	EB 1	EB 2	WB 1	WB 2	SW 1	SW 2
Volume Total	145	145	202	202	244	244
Volume Left	0	0	0	0	0	0
Volume Right	0	0	0	0	244	244
cSH	1700	1700	1700	1700	805	805
Volume to Capacity	0.09	0.09	0.12	0.12	0.30	0.30
Queue Length 95th (ft)	0	0	0	0	32	32
Control Delay (s)	0.0	0.0	0.0	0.0	11.4	11.4
Lane LOS					B	B
Approach Delay (s)	0.0		0.0		11.4	
Approach LOS					B	

Intersection Summary			
Average Delay	4.7		
Intersection Capacity Utilization	33.5%	ICU Level of Service	A
Analysis Period (min)	15		

HCM Signalized Intersection Capacity Analysis — Kincora
5: Route 7 & Countryside Blvd — 2011 Total Future

Movement	EBL	EBT	EBR	WBL	WBT	WBR	NBL	NBT	NBR	SBL	SBT	SBR
Lane Configurations												
Ideal Flow (vphpl)	1900	1900	1900	1900	1900	1900	1900	1900	1900	1900	1900	1900
Total Lost time (s)	3.0	3.0	3.0	3.0	3.0	3.0	3.0	3.0	3.0	3.0	3.0	3.0
Lane Util. Factor	0.97	0.86	1.00	0.97	0.86	1.00	0.97	0.95	1.00	0.97	0.95	1.00
Frt	1.00	1.00	0.85	1.00	1.00	0.85	1.00	1.00	0.85	1.00	1.00	0.85
Flt Protected	0.95	1.00	1.00	0.95	1.00	1.00	0.95	1.00	1.00	0.95	1.00	1.00
Satd. Flow (prot)	3433	6408	1583	3433	6408	1583	3433	3539	1583	3433	3539	1583
Flt Permitted	0.95	1.00	1.00	0.95	1.00	1.00	0.95	1.00	1.00	0.95	1.00	1.00
Satd. Flow (perm)	3433	6408	1583	3433	6408	1583	3433	3539	1583	3433	3539	1583
Volume (vph)	474	2014	158	643	2401	214	225	148	383	186	163	295
Peak-hour factor, PHF	0.95	0.95	0.95	0.95	0.95	0.95	0.95	0.95	0.95	0.95	0.95	0.95
Adj. Flow (vph)	499	2120	166	677	2527	225	237	156	403	196	172	311
RTOR Reduction (vph)	0	0	0	0	0	49	0	0	0	0	0	4
Lane Group Flow (vph)	499	2120	166	677	2527	176	237	156	403	196	172	307
Turn Type	Prot		Free	Prot		pm+ov	Prot		Free	Prot		pm+ov
Protected Phases	1	6		5	2	3	7	4		3	8	1
Permitted Phases			Free			2			Free			8
Actuated Green, G (s)	25.9	64.9	150.0	34.0	73.0	84.9	10.0	11.2	150.0	11.9	13.1	39.0
Effective Green, g (s)	29.9	68.9	150.0	38.0	77.0	92.9	14.0	15.2	150.0	15.9	17.1	47.0
Actuated g/C Ratio	0.20	0.46	1.00	0.25	0.51	0.62	0.09	0.10	1.00	0.11	0.11	0.31
Clearance Time (s)	7.0	7.0		7.0	7.0	7.0	7.0	7.0		7.0	7.0	7.0
Vehicle Extension (s)	2.0	2.0		3.0	2.0	2.0	2.0	2.0		2.0	2.0	2.0
Lane Grp Cap (vph)	684	2943	1583	870	3289	1012	320	359	1583	364	403	528
v/s Ratio Prot	0.15	0.33		c0.20	c0.39	0.02	c0.07	0.04		0.06	0.05	c0.12
v/s Ratio Perm			0.10			0.09			c0.25			0.08
v/c Ratio	0.73	0.72	0.10	0.78	0.77	0.17	0.74	0.43	0.25	0.54	0.43	0.58
Uniform Delay, d1	56.3	32.8	0.0	52.1	29.3	12.2	66.2	63.4	0.0	63.6	61.9	43.2
Progression Factor	1.00	1.00	1.00	1.00	1.00	1.00	1.00	1.00	1.00	1.00	1.00	1.00
Incremental Delay, d2	3.3	1.6	0.1	4.4	1.8	0.0	7.8	0.3	0.4	0.8	0.3	1.1
Delay (s)	59.6	34.3	0.1	56.5	31.1	12.2	74.1	63.7	0.4	64.3	62.2	44.3
Level of Service	E	C	A	E	C	B	E	E	A	E	E	D
Approach Delay (s)		36.8			34.9			34.7			54.6	
Approach LOS		D			C			C			D	

Intersection Summary

HCM Average Control Delay	37.3	HCM Level of Service	D
HCM Volume to Capacity ratio	0.73		
Actuated Cycle Length (s)	150.0	Sum of lost time (s)	6.0
Intersection Capacity Utilization	73.1%	ICU Level of Service	D
Analysis Period (min)	15		

c Critical Lane Group

HCM Signalized Intersection Capacity Analysis — Kincora
6: Route 7 & Palisade Parkway — 2011 Total Future

Movement	EBL	EBT	EBR	WBL	WBT	WBR	NBL	NBT	NBR	SBL	SBT	SBR
Lane Configurations												
Ideal Flow (vphpl)	1900	1900	1900	1900	1900	1900	1900	1900	1900	1900	1900	1900
Total Lost time (s)	3.0	3.0	3.0	3.0	3.0	3.0	3.0	3.0	3.0	3.0	3.0	3.0
Lane Util. Factor	0.97	0.86	1.00	1.00	0.86	1.00	0.97	1.00	1.00	0.97	1.00	1.00
Frt	1.00	1.00	0.85	1.00	1.00	0.85	1.00	1.00	0.85	1.00	1.00	0.85
Flt Protected	0.95	1.00	1.00	0.95	1.00	1.00	0.95	1.00	1.00	0.95	1.00	1.00
Satd. Flow (prot)	3433	6408	1583	1770	6408	1583	3433	1863	1583	3433	1863	1583
Flt Permitted	0.95	1.00	1.00	0.95	1.00	1.00	0.95	1.00	1.00	0.95	1.00	1.00
Satd. Flow (perm)	3433	6408	1583	1770	6408	1583	3433	1863	1583	3433	1863	1583
Volume (vph)	263	2165	25	74	2596	161	391	97	234	225	77	234
Peak-hour factor, PHF	0.95	0.95	0.95	0.95	0.95	0.95	0.95	0.95	0.95	0.95	0.95	0.95
Adj. Flow (vph)	277	2279	26	78	2733	169	412	102	246	237	81	246
RTOR Reduction (vph)	0	0	0	0	0	0	0	0	92	0	0	0
Lane Group Flow (vph)	277	2279	26	78	2733	169	412	102	154	237	81	246
Turn Type	Prot		Free	Prot		Free	Split		pm+ov	Split		pm+ov
Protected Phases	1	6		5	2		4	4	5	3	3	1
Permitted Phases			Free			Free			4			3
Actuated Green, G (s)	7.0	47.9	120.0	8.1	49.0	120.0	22.9	22.9	31.0	13.1	13.1	20.1
Effective Green, g (s)	11.0	51.9	120.0	12.1	53.0	120.0	26.9	26.9	39.0	17.1	17.1	28.1
Actuated g/C Ratio	0.09	0.43	1.00	0.10	0.44	1.00	0.22	0.22	0.32	0.14	0.14	0.23
Clearance Time (s)	7.0	7.0		7.0	7.0		7.0	7.0	7.0	7.0	7.0	7.0
Vehicle Extension (s)	2.0	4.0		2.0	4.0		3.0	3.0	2.0	3.0	3.0	2.0
Lane Grp Cap (vph)	315	2771	1583	178	2830	1583	770	418	554	489	265	371
v/s Ratio Prot	c0.08	0.36		0.04	c0.43		c0.12	0.05	0.03	0.07	0.04	c0.06
v/s Ratio Perm			0.02			c0.11			0.07			0.09
v/c Ratio	0.88	0.82	0.02	0.44	0.97	0.11	0.54	0.24	0.28	0.48	0.31	0.66
Uniform Delay, d1	53.8	30.0	0.0	50.8	32.6	0.0	41.0	38.2	30.0	47.4	46.1	41.7
Progression Factor	1.00	1.00	1.00	1.00	1.00	1.00	1.00	1.00	1.00	1.00	1.00	1.00
Incremental Delay, d2	22.5	2.9	0.0	0.6	10.6	0.1	0.7	0.3	0.1	0.8	0.7	3.4
Delay (s)	76.4	32.9	0.0	51.4	43.2	0.1	41.8	38.5	30.1	48.2	46.8	45.1
Level of Service	E	C	A	D	D	A	D	D	C	D	D	D
Approach Delay (s)		37.2			41.0			37.6			46.6	
Approach LOS		D			D			D			D	

Intersection Summary

HCM Average Control Delay	39.7	HCM Level of Service	D
HCM Volume to Capacity ratio	0.78		
Actuated Cycle Length (s)	120.0	Sum of lost time (s)	9.0
Intersection Capacity Utilization	73.3%	ICU Level of Service	D
Analysis Period (min)	15		

c Critical Lane Group

Movement	WBL	WBR	NBT	NBR	SBL	SBT
Lane Configurations						
Ideal Flow (vphpl)	1900	1900	1900	1900	1900	1900
Total Lost time (s)	3.0	3.0	3.0		3.0	3.0
Lane Util. Factor	1.00	1.00	0.95		1.00	0.95
Frt	1.00	0.85	0.98		1.00	1.00
Flt Protected	0.95	1.00	1.00		0.95	1.00
Satd. Flow (prot)	1770	1583	3455		1770	3539
Flt Permitted	0.95	1.00	1.00		0.23	1.00
Satd. Flow (perm)	1770	1583	3455		422	3539
Volume (vph)	112	262	618	117	250	542
Peak-hour factor, PHF	0.95	0.95	0.95	0.95	0.95	0.95
Adj. Flow (vph)	118	276	651	123	263	571
RTOR Reduction (vph)	0	110	14	0	0	0
Lane Group Flow (vph)	118	166	760	0	263	571
Turn Type		pm+ov			pm+pt	
Protected Phases	4	1	2		1	6
Permitted Phases		4			6	
Actuated Green, G (s)	6.9	15.5	18.3		33.9	33.9
Effective Green, g (s)	10.9	23.5	22.8		38.4	38.4
Actuated g/C Ratio	0.20	0.42	0.41		0.69	0.69
Clearance Time (s)	7.0	7.0	7.5		7.0	7.5
Vehicle Extension (s)	2.0	2.0	2.0		2.0	2.0
Lane Grp Cap (vph)	349	759	1424		600	2457
v/s Ratio Prot	c0.07	0.05	c0.22		c0.10	0.16
v/s Ratio Perm		0.05			0.20	
v/c Ratio	0.34	0.22	0.53		0.44	0.23
Uniform Delay, d1	19.1	10.1	12.2		4.4	3.1
Progression Factor	1.00	1.00	1.00		1.00	1.00
Incremental Delay, d2	0.2	0.1	0.2		0.2	0.0
Delay (s)	19.3	10.1	12.4		4.6	3.1
Level of Service	B	B	B		A	A
Approach Delay (s)	12.9		12.4			3.6
Approach LOS	B		B			A

Intersection Summary

HCM Average Control Delay	8.8	HCM Level of Service	A
HCM Volume to Capacity ratio	0.46		
Actuated Cycle Length (s)	55.3	Sum of lost time (s)	9.0
Intersection Capacity Utilization	50.9%	ICU Level of Service	A
Analysis Period (min)	15		

c Critical Lane Group

Movement	EBL	EBT	EBR	WBL	WBT	WBR	NBL	NBT	NBR	SBL	SBT	SBR
Lane Configurations												
Ideal Flow (vphpl)	1900	1900	1900	1900	1900	1900	1900	1900	1900	1900	1900	1900
Total Lost time (s)		4.0	4.0		4.0	4.0	4.0	4.0	4.0	4.0	4.0	4.0
Lane Util. Factor		1.00	1.00		1.00	1.00	1.00	0.95	1.00	1.00	0.95	1.00
Frt		1.00	0.85		1.00	0.85	1.00	1.00	0.85	1.00	1.00	0.85
Flt Protected		0.96	1.00		0.95	1.00	0.95	1.00	1.00	0.95	1.00	1.00
Satd. Flow (prot)		1779	1583		1770	1583	1770	3539	1583	1770	3539	1583
Flt Permitted		0.71	1.00		0.74	1.00	0.40	1.00	1.00	0.35	1.00	1.00
Satd. Flow (perm)		1323	1583		1370	1583	749	3539	1583	644	3539	1583
Volume (vph)	29	2	82	37	0	30	148	756	83	29	547	72
Peak-hour factor, PHF	0.95	0.95	0.95	0.95	0.95	0.95	0.95	0.95	0.95	0.95	0.95	0.95
Adj. Flow (vph)	31	2	86	39	0	32	156	796	87	31	576	76
RTOR Reduction (vph)	0	0	70	0	0	27	0	0	25	0	0	24
Lane Group Flow (vph)	0	33	16	0	39	5	156	796	62	31	576	52
Turn Type	Perm		pm+ov	Perm		pm+ov	pm+pt		Perm	pm+pt		Perm
Protected Phases		4	5		8	1	5	2		1	6	
Permitted Phases	4		4	8		8	2		2	6		6
Actuated Green, G (s)		4.9	10.9		4.9	7.9	67.1	61.1	61.1	61.1	58.1	58.1
Effective Green, g (s)		7.9	16.9		7.9	13.9	73.1	64.1	64.1	67.1	61.1	61.1
Actuated g/C Ratio		0.09	0.19		0.09	0.15	0.81	0.71	0.71	0.75	0.68	0.68
Clearance Time (s)		7.0	7.0		7.0	7.0	7.0	7.0	7.0	7.0	7.0	7.0
Vehicle Extension (s)		2.0	2.0		2.0	2.0	2.0	2.0	2.0	2.0	2.0	2.0
Lane Grp Cap (vph)		116	368		120	315	710	2521	1127	555	2403	1075
v/s Ratio Prot			0.00			0.00	c0.02	c0.22		0.00	0.16	
v/s Ratio Perm		0.02	0.01		c0.03	0.00	0.16		0.04	0.04		0.03
v/c Ratio		0.28	0.04		0.33	0.02	0.22	0.32	0.05	0.06	0.24	0.05
Uniform Delay, d1		38.4	29.9		38.5	32.3	1.9	4.8	3.9	3.0	5.5	4.8
Progression Factor		1.00	1.00		1.00	1.00	1.00	1.00	1.00	1.00	1.00	1.00
Incremental Delay, d2		0.5	0.0		0.6	0.0	0.1	0.3	0.1	0.0	0.2	0.1
Delay (s)		38.9	30.0		39.1	32.3	2.0	5.1	4.0	3.0	5.8	4.9
Level of Service		D	C		D	C	A	A	A	A	A	A
Approach Delay (s)		32.4			36.0			4.6			5.6	
Approach LOS		C			D			A			A	

Intersection Summary

HCM Average Control Delay	7.8	HCM Level of Service	A
HCM Volume to Capacity ratio	0.32		
Actuated Cycle Length (s)	90.0	Sum of lost time (s)	12.0
Intersection Capacity Utilization	42.9%	ICU Level of Service	A
Analysis Period (min)	15		

c Critical Lane Group

Movement	EBL	EBT	EBR	WBL	WBT	WBR	NBL	NBT	NBR	SBL	SBT	SBR
Lane Configurations												
Ideal Flow (vphpl)	1900	1900	1900	1900	1900	1900	1900	1900	1900	1900	1900	1900
Total Lost time (s)	3.0	3.0	3.0	3.0	3.0	3.0	3.0	3.0	3.0	3.0	3.0	3.0
Lane Util. Factor	1.00	0.95	1.00	0.97	0.95	1.00	0.97	0.95	1.00	0.97	0.95	1.00
Frt	1.00	1.00	0.85	1.00	1.00	0.85	1.00	1.00	0.85	1.00	1.00	0.85
Flt Protected	0.95	1.00	1.00	0.95	1.00	1.00	0.95	1.00	1.00	0.95	1.00	1.00
Satd. Flow (prot)	1770	3539	1583	3433	3539	1583	3433	3539	1583	3433	3539	1583
Flt Permitted	0.95	1.00	1.00	0.95	1.00	1.00	0.95	1.00	1.00	0.95	1.00	1.00
Satd. Flow (perm)	1770	3539	1583	3433	3539	1583	3433	3539	1583	3433	3539	1583
Volume (vph)	105	109	317	202	207	306	445	456	160	164	615	178
Peak-hour factor, PHF	0.95	0.95	0.95	0.95	0.95	0.95	0.95	0.95	0.95	0.95	0.95	0.95
Adj. Flow (vph)	111	115	334	213	218	322	468	480	168	173	647	187
RTOR Reduction (vph)	0	0	0	0	0	0	0	0	0	0	0	0
Lane Group Flow (vph)	111	115	334	213	218	322	468	480	168	173	647	187
Turn Type	Prot		Free	Prot		Free	Prot		Free	Prot		Free
Protected Phases	7	4		3	8		5	2		1	6	
Permitted Phases			Free			Free			Free			Free
Actuated Green, G (s)	9.7	11.8	99.7	13.9	16.0	99.7	17.6	35.1	99.7	10.9	28.4	99.7
Effective Green, g (s)	13.7	15.8	99.7	17.9	20.0	99.7	21.6	39.1	99.7	14.9	32.4	99.7
Actuated g/C Ratio	0.14	0.16	1.00	0.18	0.20	1.00	0.22	0.39	1.00	0.15	0.32	1.00
Clearance Time (s)	7.0	7.0		7.0	7.0		7.0	7.0		7.0	7.0	
Vehicle Extension (s)	3.0	3.0		3.0	3.0		3.0	5.0		3.0	5.0	
Lane Grp Cap (vph)	243	561	1583	616	710	1583	744	1388	1583	513	1150	1583
v/s Ratio Prot	c0.06	0.03		c0.06	c0.06		c0.14	0.14		0.05	c0.18	
v/s Ratio Perm			0.21			0.20			0.11			0.12
v/c Ratio	0.46	0.20	0.21	0.35	0.31	0.20	0.63	0.35	0.11	0.34	0.56	0.12
Uniform Delay, d1	39.6	36.5	0.0	35.8	33.9	0.0	35.4	21.3	0.0	38.0	27.8	0.0
Progression Factor	1.00	1.00	1.00	1.00	1.00	1.00	1.00	1.00	1.00	1.00	1.00	1.00
Incremental Delay, d2	1.4	0.2	0.3	0.3	0.2	0.3	1.7	0.3	0.1	0.4	1.0	0.2
Delay (s)	40.9	36.7	0.3	36.1	34.2	0.3	37.1	21.6	0.1	38.4	28.8	0.2
Level of Service	D	D	A	D	C	A	D	C	A	D	C	A
Approach Delay (s)		15.8			20.2			24.9			25.1	
Approach LOS		B			C			C			C	

Intersection Summary			
HCM Average Control Delay	22.5	HCM Level of Service	C
HCM Volume to Capacity ratio	0.50		
Actuated Cycle Length (s)	99.7	Sum of lost time (s)	9.0
Intersection Capacity Utilization	61.3%	ICU Level of Service	B
Analysis Period (min)	15		

c Critical Lane Group

Movement	EBL	EBR	NBL	NBT	SBT	SBR
Lane Configurations						
Ideal Flow (vphpl)	1900	1900	1900	1900	1900	1900
Total Lost time (s)	4.0			4.0	4.0	
Lane Util. Factor	1.00			1.00	1.00	
Frt	0.97			1.00	1.00	
Flt Protected	0.96			1.00	1.00	
Satd. Flow (prot)	1742			1862	1857	
Flt Permitted	0.96			0.99	1.00	
Satd. Flow (perm)	1742			1845	1857	
Volume (vph)	75	19	10	1443	1030	23
Peak-hour factor, PHF	0.95	0.95	0.95	0.95	0.95	0.95
Adj. Flow (vph)	79	20	11	1519	1084	24
RTOR Reduction (vph)	7	0	0	0	1	0
Lane Group Flow (vph)	92	0	0	1530	1107	0
Turn Type			Perm			
Protected Phases	4			2	6	
Permitted Phases			2			
Actuated Green, G (s)	12.4			102.0	102.0	
Effective Green, g (s)	15.4			105.0	105.0	
Actuated g/C Ratio	0.12			0.82	0.82	
Clearance Time (s)	7.0			7.0	7.0	
Vehicle Extension (s)	4.0			3.0	3.0	
Lane Grp Cap (vph)	209			1509	1519	
v/s Ratio Prot	c0.05				0.60	
v/s Ratio Perm				c0.83		
v/c Ratio	0.44			1.01	0.73	
Uniform Delay, d1	52.5			11.7	5.3	
Progression Factor	1.00			1.00	1.00	
Incremental Delay, d2	2.0			26.7	1.8	
Delay (s)	54.5			38.4	7.1	
Level of Service	D			D	A	
Approach Delay (s)	54.5			38.4	7.1	
Approach LOS	D			D	A	

Intersection Summary			
HCM Average Control Delay	26.3	HCM Level of Service	C
HCM Volume to Capacity ratio	0.94		
Actuated Cycle Length (s)	128.4	Sum of lost time (s)	8.0
Intersection Capacity Utilization	98.9%	ICU Level of Service	F
Analysis Period (min)	15		

c Critical Lane Group

Movement	EBL	EBT	EBR	WBL	WBT	WBR	NBL	NBT	NBR	SBL	SBT	SBR
Lane Configurations												
Ideal Flow (vphpl)	1900	1900	1900	1900	1900	1900	1900	1900	1900	1900	1900	1900
Total Lost time (s)	4.0	4.0	4.0	3.0	4.0	3.0	4.0	3.0	3.0	3.0	3.0	4.0
Lane Util. Factor	0.97	0.95	1.00	0.97	0.95	1.00	0.97	0.95	1.00	0.97	0.95	1.00
Frt	1.00	1.00	0.85	1.00	1.00	0.85	1.00	1.00	0.85	1.00	1.00	0.85
Flt Protected	0.95	1.00	1.00	0.95	1.00	1.00	0.95	1.00	1.00	0.95	1.00	1.00
Satd. Flow (prot)	3433	3539	1583	3433	3539	1583	3433	3539	1583	3433	3539	1583
Flt Permitted	0.95	1.00	1.00	0.95	1.00	1.00	0.95	1.00	1.00	0.95	1.00	1.00
Satd. Flow (perm)	3433	3539	1583	3433	3539	1583	3433	3539	1583	3433	3539	1583
Volume (vph)	392	461	433	223	580	85	1129	346	287	52	206	360
Peak-hour factor, PHF	0.95	0.95	0.95	0.95	0.95	0.95	0.95	0.95	0.95	0.95	0.95	0.95
Adj. Flow (vph)	413	485	456	235	611	89	1188	364	302	55	217	379
RTOR Reduction (vph)	0	0	0	0	0	0	0	0	78	0	0	0
Lane Group Flow (vph)	413	485	456	235	611	89	1188	364	224	55	217	379
Turn Type	Prot		Free	Prot		Free	Prot		pm+ov	Prot		Free
Protected Phases	1	6		5	2		7	4	5	3	8	
Permitted Phases			Free			Free			4			Free
Actuated Green, G (s)	12.1	21.0	100.0	8.1	17.0	100.0	36.0	39.4	47.5	4.0	7.4	100.0
Effective Green, g (s)	15.1	24.0	100.0	12.1	20.0	100.0	39.0	42.9	55.0	8.0	10.9	100.0
Actuated g/C Ratio	0.15	0.24	1.00	0.12	0.20	1.00	0.39	0.43	0.55	0.08	0.11	1.00
Clearance Time (s)	7.0	7.0		7.0	7.0		7.0	6.5	7.0	7.0	6.5	
Vehicle Extension (s)	2.5	4.0		2.5	4.0		2.5	2.5	2.5	2.5	2.5	
Lane Grp Cap (vph)	518	849	1583	415	708	1583	1339	1518	918	275	386	1583
v/s Ratio Prot	c0.12	0.14		0.07	c0.17		c0.35	0.10	0.03	0.02	c0.06	
v/s Ratio Perm			c0.29			0.06			0.11			0.24
v/c Ratio	0.80	0.57	0.29	0.57	0.86	0.06	0.89	0.24	0.24	0.20	0.56	0.24
Uniform Delay, d1	41.0	33.5	0.0	41.5	38.7	0.0	28.4	18.2	11.7	43.0	42.3	0.0
Progression Factor	1.00	1.00	1.00	1.00	1.00	1.00	1.00	1.00	1.00	1.00	1.00	1.00
Incremental Delay, d2	8.1	2.8	0.5	1.4	13.2	0.1	7.4	0.1	0.1	0.3	1.5	0.4
Delay (s)	49.1	36.3	0.5	42.9	51.9	0.1	35.9	18.2	11.8	43.3	43.8	0.4
Level of Service	D	D	A	D	D	A	D	B	B	D	D	A
Approach Delay (s)		28.1			44.7			28.5			18.5	
Approach LOS		C			D			C			B	

Intersection Summary				
HCM Average Control Delay	30.2	HCM Level of Service	C	
HCM Volume to Capacity ratio	0.81			
Actuated Cycle Length (s)	100.0	Sum of lost time (s)	15.0	
Intersection Capacity Utilization	78.5%	ICU Level of Service	D	
Analysis Period (min)	15			

c Critical Lane Group

Movement	EBL	EBT	EBR	WBL	WBT	WBR	NBL	NBT	NBR	SBL	SBT	SBR
Lane Configurations												
Ideal Flow (vphpl)	1900	1900	1900	1900	1900	1900	1900	1900	1900	1900	1900	1900
Total Lost time (s)	3.0	3.0	3.0	3.0	3.0	3.0	3.0	3.0	3.0	3.0	3.0	3.0
Lane Util. Factor	0.97	1.00	1.00	1.00	0.95	1.00	0.97	0.95	1.00	1.00	0.95	1.00
Frt	1.00	1.00	0.85	1.00	1.00	0.85	1.00	1.00	0.85	1.00	1.00	0.85
Flt Protected	0.95	1.00	1.00	0.95	1.00	1.00	0.95	1.00	1.00	0.95	1.00	1.00
Satd. Flow (prot)	3433	1863	1583	1770	3539	1583	3433	3539	1583	1770	3539	1583
Flt Permitted	0.95	1.00	1.00	0.95	1.00	1.00	0.95	1.00	1.00	0.95	1.00	1.00
Satd. Flow (perm)	3433	1863	1583	1770	3539	1583	3433	3539	1583	1770	3539	1583
Volume (vph)	329	285	260	238	162	33	244	1229	298	4	874	258
Peak-hour factor, PHF	0.95	0.95	0.95	0.95	0.95	0.95	0.95	0.95	0.95	0.95	0.95	0.95
Adj. Flow (vph)	346	300	274	251	171	35	257	1294	314	4	920	272
RTOR Reduction (vph)	0	0	170	0	0	27	0	0	108	0	0	165
Lane Group Flow (vph)	346	300	104	251	171	8	257	1294	206	4	920	107
Turn Type	Prot		Perm	Prot		Perm	Prot		Perm	Prot		Perm
Protected Phases	7	4		3	8		1	6		5	2	
Permitted Phases			4			8			6			2
Actuated Green, G (s)	17.5	22.3	22.3	19.9	24.7	24.7	12.5	58.2	58.2	1.8	47.5	47.5
Effective Green, g (s)	21.5	27.3	27.3	23.9	29.7	29.7	16.5	62.7	62.7	5.8	52.0	52.0
Actuated g/C Ratio	0.16	0.21	0.21	0.18	0.23	0.23	0.13	0.48	0.48	0.04	0.39	0.39
Clearance Time (s)	7.0	8.0	8.0	7.0	8.0	8.0	7.0	7.5	7.5	7.0	7.5	7.5
Vehicle Extension (s)	3.0	3.0	3.0	3.0	3.0	3.0	3.0	3.0	3.0	3.0	3.0	3.0
Lane Grp Cap (vph)	560	386	328	321	798	357	430	1685	754	78	1397	625
v/s Ratio Prot	0.10	c0.16		c0.14	0.05		c0.07	c0.37		0.00	0.26	
v/s Ratio Perm			0.07			0.00			0.13			0.07
v/c Ratio	0.62	0.78	0.32	0.78	0.21	0.02	0.60	0.77	0.27	0.05	0.66	0.17
Uniform Delay, d1	51.3	49.3	44.3	51.4	41.5	39.7	54.5	28.5	20.8	60.3	32.6	25.9
Progression Factor	1.00	1.00	1.00	1.00	1.00	1.00	1.00	1.00	1.00	1.00	1.00	1.00
Incremental Delay, d2	2.0	9.5	0.6	11.7	0.1	0.0	2.2	2.2	0.2	0.3	1.1	0.1
Delay (s)	53.3	58.8	44.8	63.1	41.6	39.7	56.7	30.7	21.0	60.6	33.7	26.0
Level of Service	D	E	D	E	D	D	E	C	C	E	C	C
Approach Delay (s)		52.6			53.3			32.6			32.1	
Approach LOS		D			D			C			C	

Intersection Summary				
HCM Average Control Delay	38.7	HCM Level of Service	D	
HCM Volume to Capacity ratio	0.75			
Actuated Cycle Length (s)	131.7	Sum of lost time (s)	12.0	
Intersection Capacity Utilization	83.8%	ICU Level of Service	E	
Analysis Period (min)	15			

c Critical Lane Group

HCM Signalized Intersection Capacity Analysis
16: Woodland Road & Potomac View Road

Kincora
2011 Total Future

Movement	EBL	EBR	NBL	NBT	SBT	SBR
Lane Configurations						
Ideal Flow (vphpl)	1900	1900	1900	1900	1900	1900
Total Lost time (s)	3.0	3.0	3.0	3.0	3.0	3.0
Lane Util. Factor	1.00	1.00	1.00	0.95	0.95	1.00
Frt	1.00	0.85	1.00	1.00	1.00	0.85
Flt Protected	0.95	1.00	0.95	1.00	1.00	1.00
Satd. Flow (prot)	1770	1583	1770	3539	3539	1583
Flt Permitted	0.95	1.00	0.09	1.00	1.00	1.00
Satd. Flow (perm)	1770	1583	176	3539	3539	1583
Volume (vph)	211	183	249	1516	1150	116
Peak-hour factor, PHF	0.95	0.95	0.95	0.95	0.95	0.95
Adj. Flow (vph)	222	193	262	1596	1211	122
RTOR Reduction (vph)	0	148	0	0	0	37
Lane Group Flow (vph)	222	45	262	1596	1211	85
Turn Type		Perm	pm+pt			pm+ov
Protected Phases	4		1	6	2	4
Permitted Phases		4	6			2
Actuated Green, G (s)	16.4	16.4	58.1	58.1	37.2	53.6
Effective Green, g (s)	20.4	20.4	61.6	61.6	40.7	61.1
Actuated g/C Ratio	0.23	0.23	0.70	0.70	0.46	0.69
Clearance Time (s)	7.0	7.0	7.0	6.5	6.5	7.0
Vehicle Extension (s)	3.0	3.0	4.0	4.0	4.0	3.0
Lane Grp Cap (vph)	410	367	447	2477	1637	1153
v/s Ratio Prot	c0.13		0.12	c0.45	c0.34	0.02
v/s Ratio Perm		0.03	0.29			0.04
v/c Ratio	0.54	0.12	0.59	0.64	0.74	0.07
Uniform Delay, d1	29.7	26.7	17.8	7.2	19.3	4.3
Progression Factor	1.00	1.00	1.00	1.00	1.00	1.00
Incremental Delay, d2	1.5	0.1	2.3	0.7	1.9	0.0
Delay (s)	31.2	26.9	20.1	7.9	21.2	4.4
Level of Service	C	C	C	A	C	A
Approach Delay (s)	29.2			9.6	19.7	
Approach LOS	C			A	B	

Intersection Summary

HCM Average Control Delay	15.6	HCM Level of Service	B
HCM Volume to Capacity ratio	0.67		
Actuated Cycle Length (s)	88.0	Sum of lost time (s)	9.0
Intersection Capacity Utilization	67.3%	ICU Level of Service	C
Analysis Period (min)	15		

c Critical Lane Group

HCM Signalized Intersection Capacity Analysis
18: Farmwell Road & Ashburn Village Blvd.

Kincora
2011 Total Future

Movement	EBL	EBT	EBR	WBL	WBT	WBR	NBL	NBT	NBR	SBL	SBT	SBR
Lane Configurations												
Ideal Flow (vphpl)	1900	1900	1900	1900	1900	1900	1900	1900	1900	1900	1900	1900
Total Lost time (s)	3.0	3.0	3.0	3.0	3.0	3.0	3.0	3.0	3.0	3.0	3.0	3.0
Lane Util. Factor	1.00	0.91	1.00	1.00	0.91	1.00	1.00	0.95	1.00	0.97	0.95	1.00
Frt	1.00	1.00	0.85	1.00	1.00	0.85	1.00	1.00	0.85	1.00	1.00	0.85
Flt Protected	0.95	1.00	1.00	0.95	1.00	1.00	0.95	1.00	1.00	0.95	1.00	1.00
Satd. Flow (prot)	1770	5085	1583	1770	5085	1583	1770	3539	1583	3433	3539	1583
Flt Permitted	0.95	1.00	1.00	0.95	1.00	1.00	0.95	1.00	1.00	0.95	1.00	1.00
Satd. Flow (perm)	1770	5085	1583	1770	5085	1583	1770	3539	1583	3433	3539	1583
Volume (vph)	226	732	194	216	1743	1202	127	549	108	685	394	156
Peak-hour factor, PHF	0.95	0.95	0.95	0.95	0.95	0.95	0.95	0.95	0.95	0.95	0.95	0.95
Adj. Flow (vph)	238	771	204	227	1835	1265	134	578	112	721	415	164
RTOR Reduction (vph)	0	0	0	0	0	0	0	0	23	0	0	41
Lane Group Flow (vph)	238	771	204	227	1835	1265	134	578	89	721	415	123
Turn Type	Prot		Free	Prot		Free	Prot		pm+ov	Prot		pm+ov
Protected Phases	1	6		5	2		3	8	5	7	4	1
Permitted Phases			Free			Free			8			4
Actuated Green, G (s)	12.9	37.0	125.0	13.9	38.0	125.0	11.4	23.6	37.5	23.0	35.2	48.1
Effective Green, g (s)	16.9	41.0	125.0	17.9	42.0	125.0	15.4	27.1	45.0	27.0	38.7	55.6
Actuated g/C Ratio	0.14	0.33	1.00	0.14	0.34	1.00	0.12	0.22	0.36	0.22	0.31	0.44
Clearance Time (s)	7.0	7.0		7.0	7.0		7.0	6.5	7.0	7.0	6.5	7.0
Vehicle Extension (s)	2.0	3.0		2.0	3.0		.2.0	2.0	2.0	2.0	2.0	2.0
Lane Grp Cap (vph)	239	1668	1583	253	1709	1583	218	767	608	742	1096	742
v/s Ratio Prot	c0.13	0.15		0.13	c0.36		0.08	0.16	0.02	c0.21	0.12	0.02
v/s Ratio Perm			0.13			c0.80			0.04			0.06
v/c Ratio	1.00	0.46	0.13	0.90	1.07	0.80	0.61	0.75	0.15	0.97	0.38	0.17
Uniform Delay, d1	54.0	33.3	0.0	52.6	41.5	0.0	52.0	45.8	27.0	48.6	33.7	20.8
Progression Factor	1.00	1.00	1.00	1.00	1.00	1.00	1.00	1.00	1.00	1.00	1.00	1.00
Incremental Delay, d2	56.6	0.9	0.2	30.2	44.6	4.3	3.6	3.7	0.0	25.9	0.1	0.0
Delay (s)	110.6	34.2	0.2	82.8	86.1	4.3	55.6	49.6	27.1	74.6	33.8	20.8
Level of Service	F	C	A	F	F	A	E	D	C	E	C	C
Approach Delay (s)		43.5			54.8			47.5			54.8	
Approach LOS		D			D			D			D	

Intersection Summary

HCM Average Control Delay	51.8	HCM Level of Service	D
HCM Volume to Capacity ratio	0.95		
Actuated Cycle Length (s)	125.0	Sum of lost time (s)	6.0
Intersection Capacity Utilization	94.2%	ICU Level of Service	F
Analysis Period (min)	15		

c Critical Lane Group

HCM Signalized Intersection Capacity Analysis
19: Farmwell Road & Smith Switch Road

Kincora
2011 Total Future

Movement	EBL	EBT	EBR	WBL	WBT	WBR	NBL	NBT	NBR	SBL	SBT	SBR
Lane Configurations												
Ideal Flow (vphpl)	1900	1900	1900	1900	1900	1900	1900	1900	1900	1900	1900	1900
Total Lost time (s)	3.0	3.0	3.0	3.0	3.0	3.0	3.0	3.0	3.0	3.0	3.0	
Lane Util. Factor	1.00	0.91	1.00	1.00	0.91	1.00	1.00	0.95	1.00	1.00	0.95	
Frt	1.00	1.00	0.85	1.00	1.00	0.85	1.00	1.00	0.85	1.00	0.92	
Flt Protected	0.95	1.00	1.00	0.95	1.00	1.00	0.95	1.00	1.00	0.95	1.00	
Satd. Flow (prot)	1770	5085	1583	1770	5085	1583	1770	3539	1583	1770	3241	
Flt Permitted	0.95	1.00	1.00	0.95	1.00	1.00	0.66	1.00	1.00	0.54	1.00	
Satd. Flow (perm)	1770	5085	1583	1770	5085	1583	1237	3539	1583	1013	3241	
Volume (vph)	17	1460	45	417	2596	146	130	32	432	194	58	74
Peak-hour factor, PHF	0.95	0.95	0.95	0.95	0.95	0.95	0.95	0.95	0.95	0.95	0.95	0.95
Adj. Flow (vph)	18	1537	47	439	2733	154	137	34	455	204	61	78
RTOR Reduction (vph)	0	0	23	0	0	30	0	0	0	0	69	0
Lane Group Flow (vph)	18	1537	24	439	2733	124	137	34	455	204	70	0
Turn Type	Prot		pm+ov	Prot		pm+ov	pm+pt		Free	pm+pt		
Protected Phases	1	6	3	5	2	7	3	8		7	4	
Permitted Phases			6			2	8		Free	4		
Actuated Green, G (s)	2.8	50.9	63.1	37.3	85.4	105.1	17.3	5.1	140.0	31.8	12.6	
Effective Green, g (s)	6.8	54.4	70.6	41.3	88.9	112.6	24.8	8.6	140.0	35.3	16.1	
Actuated g/C Ratio	0.05	0.39	0.50	0.29	0.64	0.80	0.18	0.06	1.00	0.25	0.12	
Clearance Time (s)	7.0	6.5	7.0	7.0	6.5	7.0	7.0	6.5		7.0	6.5	
Vehicle Extension (s)	2.0	3.0	2.0	2.0	3.0	2.0	2.0	2.0		2.0	2.0	
Lane Grp Cap (vph)	86	1976	832	522	3229	1307	281	217	1583	384	373	
v/s Ratio Prot	0.01	0.30	0.00	c0.25	c0.54	0.02	0.06	0.01		c0.09	0.02	
v/s Ratio Perm			0.01			0.06	0.03		0.29	c0.04		
v/c Ratio	0.21	0.78	0.03	0.84	0.85	0.09	0.49	0.16	0.29	0.53	0.19	
Uniform Delay, d1	64.0	37.5	17.5	46.3	20.2	2.9	51.4	62.3	0.0	44.3	56.0	
Progression Factor	1.00	1.00	1.00	1.00	1.00	1.00	1.00	1.00	1.00	1.00	1.00	
Incremental Delay, d2	0.4	3.1	0.0	11.2	2.9	0.0	0.5	0.1	0.5	0.7	1.1	
Delay (s)	64.5	40.6	17.5	57.5	23.1	2.9	51.9	62.4	0.5	45.0	57.1	
Level of Service	E	D	B	E	C	A	D	E	A	D	E	
Approach Delay (s)		40.2			26.7			15.1			49.9	
Approach LOS		D			C			B			D	

Intersection Summary

HCM Average Control Delay	30.5	HCM Level of Service	C
HCM Volume to Capacity ratio	0.76		
Actuated Cycle Length (s)	140.0	Sum of lost time (s)	6.0
Intersection Capacity Utilization	85.9%	ICU Level of Service	E
Analysis Period (min)	15		

c Critical Lane Group

HCM Signalized Intersection Capacity Analysis
21: Waxpool Road & Pacific Blvd

Kincora
2011 Total Future

Movement	EBL	EBT	EBR	WBL	WBT	WBR	NBL	NBT	NBR	SBL	SBT	SBR
Lane Configurations												
Ideal Flow (vphpl)	1900	1900	1900	1900	1900	1900	1900	1900	1900	1900	1900	1900
Total Lost time (s)	3.0	3.0	3.0	3.0	3.0	3.0	3.0	3.0	3.0	3.0	3.0	3.0
Lane Util. Factor	0.97	0.86	1.00	0.97	0.86	1.00	0.97	0.95	1.00	0.97	0.95	1.00
Frt	1.00	1.00	0.85	1.00	1.00	0.85	1.00	1.00	0.85	1.00	1.00	0.85
Flt Protected	0.95	1.00	1.00	0.95	1.00	1.00	0.95	1.00	1.00	0.95	1.00	1.00
Satd. Flow (prot)	3433	6408	1583	3433	6408	1583	3433	3539	1583	3433	3539	1583
Flt Permitted	0.95	1.00	1.00	0.95	1.00	1.00	0.95	1.00	1.00	0.95	1.00	1.00
Satd. Flow (perm)	3433	6408	1583	3433	6408	1583	3433	3539	1583	3433	3539	1583
Volume (vph)	416	2251	94	72	3919	342	343	69	676	317	71	667
Peak-hour factor, PHF	0.95	0.95	0.95	0.95	0.95	0.95	0.95	0.95	0.95	0.95	0.95	0.95
Adj. Flow (vph)	438	2369	99	76	4125	360	361	73	712	334	75	702
RTOR Reduction (vph)	0	0	31	0	0	0	0	0	0	0	0	0
Lane Group Flow (vph)	438	2369	68	76	4125	360	361	73	712	334	75	702
Turn Type	Prot		Perm	Prot		Free	Prot		Free	Prot		Free
Protected Phases	1	6		5	2		7	4		3	8	
Permitted Phases			6			Free			Free			Free
Actuated Green, G (s)	14.0	95.0	95.0	5.0	86.0	145.0	11.0	8.0	145.0	11.0	6.0	145.0
Effective Green, g (s)	18.0	99.0	99.0	9.0	90.0	145.0	15.0	10.0	145.0	15.0	10.0	145.0
Actuated g/C Ratio	0.12	0.68	0.68	0.06	0.62	1.00	0.10	0.07	1.00	0.10	0.07	1.00
Clearance Time (s)	7.0	7.0	7.0	7.0	7.0		7.0	7.0		7.0	7.0	
Vehicle Extension (s)	2.0	3.0	3.0	2.0	3.0		3.0	3.0		3.0	3.0	
Lane Grp Cap (vph)	426	4375	1081	213	3977	1583	355	244	1583	355	244	1583
v/s Ratio Prot	c0.13	0.37		0.02	c0.64		c0.11	0.02		0.10	0.02	
v/s Ratio Perm			0.04			0.23			c0.45			0.44
v/c Ratio	1.03	0.54	0.06	0.36	1.04	0.23	1.02	0.30	0.45	0.94	0.31	0.44
Uniform Delay, d1	63.5	11.6	7.6	65.2	27.5	0.0	65.0	64.2	0.0	64.6	64.2	0.0
Progression Factor	1.00	1.00	1.00	1.00	1.00	1.00	1.00	1.00	1.00	1.00	1.00	1.00
Incremental Delay, d2	51.0	0.5	0.1	0.4	25.1	0.3	52.1	0.7	0.9	32.7	0.7	0.9
Delay (s)	114.5	12.1	7.7	65.6	52.6	0.3	117.1	64.9	0.9	97.3	64.9	0.9
Level of Service	F	B	A	E	D	A	F	E	A	F	E	A
Approach Delay (s)		27.4			48.7			41.6			34.2	
Approach LOS		C			D			D			C	

Intersection Summary

HCM Average Control Delay	39.8	HCM Level of Service	D
HCM Volume to Capacity ratio	0.98		
Actuated Cycle Length (s)	145.0	Sum of lost time (s)	9.0
Intersection Capacity Utilization	95.1%	ICU Level of Service	F
Analysis Period (min)	15		

c Critical Lane Group

Movement	EBL	EBT	EBR	WBL	WBT	WBR	NBL	NBT	NBR	SBL	SBT	SBR
Lane Configurations												
Ideal Flow (vphpl)	1900	1900	1900	1900	1900	1900	1900	1900	1900	1900	1900	1900
Total Lost time (s)		3.0		3.0	3.0			3.0	3.0		3.0	
Lane Util. Factor		0.95		1.00	0.95			1.00	1.00		1.00	
Frt		0.99		1.00	1.00			1.00	0.85		0.94	
Flt Protected		1.00		0.95	1.00			0.95	1.00		0.98	
Satd. Flow (prot)		3498		1770	3539			1775	1583		1724	
Flt Permitted		0.92		0.06	1.00			0.95	1.00		0.98	
Satd. Flow (perm)		3234		117	3539			1775	1583		1724	
Volume (vph)	25	1590	125	165	1015	0	180	2	262	7	3	7
Peak-hour factor, PHF	0.95	0.95	0.95	0.95	0.95	0.95	0.95	0.95	0.95	0.95	0.95	0.95
Adj. Flow (vph)	26	1674	132	174	1068	0	189	2	276	7	3	7
RTOR Reduction (vph)	0	3	0	0	0	0	0	0	0	0	7	0
Lane Group Flow (vph)	0	1829	0	174	1068	0	0	191	276	0	10	0
Turn Type	Perm			pm+pt			Split		pm+ov	Split		
Protected Phases		6		5	2		4	4	5	8	8	
Permitted Phases	6			2					4			
Actuated Green, G (s)		57.7		68.8	68.8			15.7	21.3		2.7	
Effective Green, g (s)		60.7		71.8	71.8			18.7	26.8		5.7	
Actuated g/C Ratio		0.58		0.68	0.68			0.18	0.25		0.05	
Clearance Time (s)		6.0		5.5	6.0			6.0	5.5		6.0	
Vehicle Extension (s)		4.0		2.0	4.0			3.0	2.0		3.0	
Lane Grp Cap (vph)		1866		207	2415			316	403		93	
v/s Ratio Prot				c0.06	0.30			0.11	c0.05		c0.01	
v/s Ratio Perm		c0.57		0.51					0.12			
v/c Ratio		0.98		0.84	0.44			0.60	0.68		0.11	
Uniform Delay, d1		21.7		30.2	7.6			39.8	35.4		47.3	
Progression Factor		1.00		1.00	1.00			1.00	1.00		1.00	
Incremental Delay, d2		16.2		24.4	0.2			3.2	3.8		0.5	
Delay (s)		37.8		54.6	7.8			43.1	39.2		47.9	
Level of Service		D		D	A			D	D		D	
Approach Delay (s)		37.8			14.3			40.8			47.9	
Approach LOS		D			B			D			D	

Intersection Summary			
HCM Average Control Delay	30.1	HCM Level of Service	C
HCM Volume to Capacity ratio	0.86		
Actuated Cycle Length (s)	105.2	Sum of lost time (s)	12.0
Intersection Capacity Utilization	103.5%	ICU Level of Service	G
Analysis Period (min)	15		

c Critical Lane Group

Movement	EBL	EBT	WBT	WBR	SBL	SBR
Lane Configurations						
Ideal Flow (vphpl)	1900	1900	1900	1900	1900	1900
Total Lost time (s)	3.0	3.0	3.0	3.0	3.0	3.0
Lane Util. Factor	0.97	0.95	0.91	0.91	0.97	1.00
Frt	1.00	1.00	0.98	0.85	1.00	0.85
Flt Protected	0.95	1.00	1.00	1.00	0.95	1.00
Satd. Flow (prot)	3433	3539	3335	1441	3433	1583
Flt Permitted	0.95	1.00	1.00	1.00	0.95	1.00
Satd. Flow (perm)	3433	3539	3335	1441	3433	1583
Volume (vph)	1088	537	525	751	623	718
Peak-hour factor, PHF	0.95	0.95	0.95	0.95	0.95	0.95
Adj. Flow (vph)	1145	565	553	791	656	756
RTOR Reduction (vph)	0	0	5	7	0	481
Lane Group Flow (vph)	1145	565	615	717	656	275
Turn Type	Prot			pm+ov		Perm
Protected Phases	5	2	6	4	4	
Permitted Phases				6		4
Actuated Green, G (s)	45.5	78.6	26.1	65.9	39.8	39.8
Effective Green, g (s)	49.5	82.6	30.1	74.4	44.3	44.3
Actuated g/C Ratio	0.37	0.62	0.23	0.56	0.33	0.33
Clearance Time (s)	7.0	7.0	7.0	7.5	7.5	7.5
Vehicle Extension (s)	2.0	3.0	3.0	3.0	3.0	3.0
Lane Grp Cap (vph)	1279	2200	755	839	1144	528
v/s Ratio Prot	c0.33	0.16	0.18	c0.28	0.19	
v/s Ratio Perm				0.21		0.17
v/c Ratio	0.90	0.26	0.81	0.85	0.57	0.52
Uniform Delay, d1	39.3	11.3	48.7	24.7	36.5	35.7
Progression Factor	1.00	1.00	1.00	1.00	1.00	1.00
Incremental Delay, d2	8.2	0.1	6.7	8.5	0.7	0.9
Delay (s)	47.5	11.4	55.5	33.1	37.2	36.7
Level of Service	D	B	E	C	D	D
Approach Delay (s)		35.6	43.4		36.9	
Approach LOS		D	D		D	

Intersection Summary			
HCM Average Control Delay	38.4	HCM Level of Service	D
HCM Volume to Capacity ratio	0.87		
Actuated Cycle Length (s)	132.9	Sum of lost time (s)	6.0
Intersection Capacity Utilization	81.3%	ICU Level of Service	D
Analysis Period (min)	15		

c Critical Lane Group

Movement	EBL	EBT	EBR	WBL	WBT	WBR	NBL	NBT	NBR	SBL	SBT	SBR
Lane Configurations												
Ideal Flow (vphpl)	1900	1900	1900	1900	1900	1900	1900	1900	1900	1900	1900	1900
Total Lost time (s)		4.0	4.0	4.0		4.0	4.0	4.0	4.0	4.0	4.0	4.0
Lane Util. Factor		1.00	1.00	1.00		1.00	1.00	0.95	1.00	1.00	0.95	1.00
Frt		1.00	0.85	1.00		0.85	1.00	1.00	0.85	1.00	1.00	0.85
Flt Protected		0.95	1.00	0.95		1.00	0.95	1.00	1.00	0.95	1.00	1.00
Satd. Flow (prot)		1770	1583	1770		1583	1770	3539	1583	1770	3539	1583
Flt Permitted		0.76	1.00	0.46		1.00	0.95	1.00	1.00	0.95	1.00	1.00
Satd. Flow (perm)		1410	1583	851		1583	1770	3539	1583	1770	3539	1583
Volume (vph)	226	0	181	56	0	168	139	1230	12	35	868	147
Peak-hour factor, PHF	0.95	0.95	0.95	0.95	0.95	0.95	0.95	0.95	0.95	0.95	0.95	0.95
Adj. Flow (vph)	238	0	191	59	0	177	146	1295	13	37	914	155
RTOR Reduction (vph)	0	0	140	0	0	130	0	0	4	0	0	71
Lane Group Flow (vph)	0	238	51	59	0	47	146	1295	9	37	914	84
Turn Type	Perm		Perm	Perm		Perm	Prot		Perm	Prot		Perm
Protected Phases		4			8		5	2		1	6	
Permitted Phases	4		4	8		8			2			6
Actuated Green, G (s)		20.9	20.9	20.9		20.9	9.9	43.7	43.7	4.0	37.8	37.8
Effective Green, g (s)		23.9	23.9	23.9		23.9	12.9	46.7	46.7	7.0	40.8	40.8
Actuated g/C Ratio		0.27	0.27	0.27		0.27	0.14	0.52	0.52	0.08	0.46	0.46
Clearance Time (s)		7.0	7.0	7.0		7.0	7.0	7.0	7.0	7.0	7.0	7.0
Vehicle Extension (s)		3.0	3.0	3.0		3.0	2.0	3.0	3.0	2.0	3.0	3.0
Lane Grp Cap (vph)		376	422	227		422	255	1845	825	138	1612	721
v/s Ratio Prot							c0.08	c0.37		0.02	0.26	
v/s Ratio Perm		c0.17	0.03	0.07		0.03			0.01			0.05
v/c Ratio		0.63	0.12	0.26		0.11	0.57	0.70	0.01	0.27	0.57	0.12
Uniform Delay, d1		29.0	24.9	25.9		24.8	35.8	16.2	10.3	38.9	17.9	14.0
Progression Factor		1.00	1.00	1.00		1.00	1.00	1.00	1.00	1.00	1.00	1.00
Incremental Delay, d2		3.5	0.1	0.6		0.1	1.9	1.2	0.0	0.4	0.5	0.1
Delay (s)		32.4	25.0	26.5		24.9	37.7	17.4	10.3	39.3	18.4	14.1
Level of Service		C	C	C		C	D	B	B	D	B	B
Approach Delay (s)		29.1			25.3			19.4			18.5	
Approach LOS		C			C			B			B	

Intersection Summary				
HCM Average Control Delay	20.8	HCM Level of Service	C	
HCM Volume to Capacity ratio	0.65			
Actuated Cycle Length (s)	89.6	Sum of lost time (s)	8.0	
Intersection Capacity Utilization	69.0%	ICU Level of Service	C	
Analysis Period (min)	15			

c Critical Lane Group

Movement	WBL	WBR	NBT	NBR	SBL	SBT
Lane Configurations						
Ideal Flow (vphpl)	1900	1900	1900	1900	1900	1900
Total Lost time (s)	4.0	4.0	4.0		4.0	4.0
Lane Util. Factor	1.00	1.00	1.00		1.00	1.00
Frt	1.00	0.85	0.97		1.00	1.00
Flt Protected	0.95	1.00	1.00		0.95	1.00
Satd. Flow (prot)	1770	1583	1811		1770	1863
Flt Permitted	0.95	1.00	1.00		0.53	1.00
Satd. Flow (perm)	1770	1583	1811		978	1863
Volume (vph)	47	371	281	72	598	457
Peak-hour factor, PHF	0.95	0.95	0.95	0.95	0.95	0.95
Adj. Flow (vph)	49	391	296	76	629	481
RTOR Reduction (vph)	0	331	5	0	0	0
Lane Group Flow (vph)	49	60	367	0	629	481
Turn Type		Perm			Perm	
Protected Phases	8		2			6
Permitted Phases		8			6	
Actuated Green, G (s)	12.5	12.5	73.7		73.7	73.7
Effective Green, g (s)	15.5	15.5	76.7		76.7	76.7
Actuated g/C Ratio	0.15	0.15	0.77		0.77	0.77
Clearance Time (s)	7.0	7.0	7.0		7.0	7.0
Vehicle Extension (s)	2.0	2.0	2.0		2.0	2.0
Lane Grp Cap (vph)	274	245	1386		749	1426
v/s Ratio Prot	0.03		0.20			0.26
v/s Ratio Perm		c0.04			c0.64	
v/c Ratio	0.18	0.25	0.26		0.84	0.34
Uniform Delay, d1	36.8	37.2	3.5		7.7	3.7
Progression Factor	1.00	1.00	1.00		1.00	1.00
Incremental Delay, d2	0.1	0.2	0.0		7.9	0.1
Delay (s)	36.9	37.4	3.5		15.6	3.8
Level of Service	D	D	A		B	A
Approach Delay (s)	37.4		3.5			10.5
Approach LOS	D		A			B

Intersection Summary			
HCM Average Control Delay	15.3	HCM Level of Service	B
HCM Volume to Capacity ratio	0.74		
Actuated Cycle Length (s)	100.2	Sum of lost time (s)	8.0
Intersection Capacity Utilization	70.6%	ICU Level of Service	C
Analysis Period (min)	15		

c Critical Lane Group

Movement	EBL	EBT	WBT	WBR	SWL	SWR
Lane Configurations		↑↑	↑↑			↱↑
Sign Control		Free	Free		Stop	
Grade		0%	0%		0%	
Volume (veh/h)	0	1610	137	0	0	291
Peak Hour Factor	0.95	0.95	0.95	0.95	0.95	0.95
Hourly flow rate (vph)	0	1695	144	0	0	306
Pedestrians						
Lane Width (ft)						
Walking Speed (ft/s)						
Percent Blockage						
Right turn flare (veh)						
Median type					None	
Median storage veh)						
Upstream signal (ft)		411				
pX, platoon unblocked						
vC, conflicting volume	144				992	72
vC1, stage 1 conf vol						
vC2, stage 2 conf vol						
vCu, unblocked vol	144				992	72
tC, single (s)	4.1				6.8	6.9
tC, 2 stage (s)						
tF (s)	2.2				3.5	3.3
p0 queue free %	100				100	69
cM capacity (veh/h)	1436				243	975

Direction, Lane #	EB 1	EB 2	WB 1	WB 2	SW 1	SW 2
Volume Total	847	847	72	72	153	153
Volume Left	0	0	0	0	0	0
Volume Right	0	0	0	0	153	153
cSH	1700	1700	1700	1700	975	975
Volume to Capacity	0.50	0.50	0.04	0.04	0.16	0.16
Queue Length 95th (ft)	0	0	0	0	14	14
Control Delay (s)	0.0	0.0	0.0	0.0	9.4	9.4
Lane LOS					A	A
Approach Delay (s)	0.0		0.0		9.4	
Approach LOS					A	

Intersection Summary			
Average Delay	1.3		
Intersection Capacity Utilization	47.8%	ICU Level of Service	A
Analysis Period (min)	15		

HCM Signalized Intersection Capacity Analysis
11: Smith Switch Road & Loudoun County Parkway

Kincora
2011 Total Future

Movement	EBL	EBR	NBL	NBT	SBT	SBR
Lane Configurations						
Ideal Flow (vphpl)	1900	1900	1900	1900	1900	1900
Total Lost time (s)	4.0			4.0	4.0	
Lane Util. Factor	1.00			1.00	1.00	
Frt	0.95			1.00	1.00	
Flt Protected	0.97			1.00	1.00	
Satd. Flow (prot)	1718			1861	1861	
Flt Permitted	0.97			0.99	1.00	
Satd. Flow (perm)	1718			1841	1861	
Volume (vph)	9	5	11	591	527	4
Peak-hour factor, PHF	0.95	0.95	0.95	0.95	0.95	0.95
Adj. Flow (vph)	9	5	12	622	555	4
RTOR Reduction (vph)	5	0	0	0	0	0
Lane Group Flow (vph)	9	0	0	634	559	0
Turn Type			Perm			
Protected Phases	4			2	6	
Permitted Phases			2			
Actuated Green, G (s)	4.4			99.7	99.7	
Effective Green, g (s)	7.4			102.7	102.7	
Actuated g/C Ratio	0.06			0.87	0.87	
Clearance Time (s)	7.0			7.0	7.0	
Vehicle Extension (s)	4.0			3.0	3.0	
Lane Grp Cap (vph)	108			1601	1618	
v/s Ratio Prot	c0.01				0.30	
v/s Ratio Perm				c0.34		
v/c Ratio	0.09			0.40	0.35	
Uniform Delay, d1	52.2			1.5	1.4	
Progression Factor	1.00			1.00	1.00	
Incremental Delay, d2	0.5			0.2	0.1	
Delay (s)	52.6			1.7	1.6	
Level of Service	D			A	A	
Approach Delay (s)	52.6			1.7	1.6	
Approach LOS	D			A	A	

Intersection Summary			
HCM Average Control Delay	2.2	HCM Level of Service	A
HCM Volume to Capacity ratio	0.38		
Actuated Cycle Length (s)	118.1	Sum of lost time (s)	8.0
Intersection Capacity Utilization	54.9%	ICU Level of Service	A
Analysis Period (min)	15		

c Critical Lane Group

HCM Signalized Intersection Capacity Analysis
21: Waxpool Road & Pacific Blvd

Kincora
2011 Total Future

Movement	EBL	EBT	EBR	WBL	WBT	WBR	NBL	NBT	NBR	SBL	SBT	SBR
Lane Configurations												
Ideal Flow (vphpl)	1900	1900	1900	1900	1900	1900	1900	1900	1900	1900	1900	1900
Total Lost time (s)	3.0	3.0	3.0	3.0	3.0	3.0	3.0	3.0	3.0	3.0	3.0	3.0
Lane Util. Factor	0.97	0.86	1.00	0.97	0.86	1.00	0.97	0.95	1.00	0.97	0.95	1.00
Frt	1.00	1.00	0.85	1.00	1.00	0.85	1.00	1.00	0.85	1.00	1.00	0.85
Flt Protected	0.95	1.00	1.00	0.95	1.00	1.00	0.95	1.00	1.00	0.95	1.00	1.00
Satd. Flow (prot)	3433	6408	1583	3433	6408	1583	3433	3539	1583	3433	3539	1583
Flt Permitted	0.95	1.00	1.00	0.95	1.00	1.00	0.95	1.00	1.00	0.95	1.00	1.00
Satd. Flow (perm)	3433	6408	1583	3433	6408	1583	3433	3539	1583	3433	3539	1583
Volume (vph)	949	1688	40	20	1358	851	48	93	37	700	61	827
Peak-hour factor, PHF	0.95	0.95	0.95	0.95	0.95	0.95	0.95	0.95	0.95	0.95	0.95	0.95
Adj. Flow (vph)	999	1777	42	21	1429	896	51	98	39	737	64	871
RTOR Reduction (vph)	0	0	20	0	0	0	0	0	0	0	0	0
Lane Group Flow (vph)	999	1777	22	21	1429	896	51	98	39	737	64	871
Turn Type	Prot		Perm	Prot		Free	Prot		Free	Prot		Free
Protected Phases	1	6		5	2		7	4		3	8	
Permitted Phases			6			Free			Free			Free
Actuated Green, G (s)	42.7	71.1	71.1	3.0	31.4	145.0	6.5	7.8	145.0	35.1	36.4	145.0
Effective Green, g (s)	46.7	75.1	75.1	7.0	35.4	145.0	10.5	11.8	145.0	39.1	40.4	145.0
Actuated g/C Ratio	0.32	0.52	0.52	0.05	0.24	1.00	0.07	0.08	1.00	0.27	0.28	1.00
Clearance Time (s)	7.0	7.0	7.0	7.0	7.0		7.0	7.0		7.0	7.0	
Vehicle Extension (s)	2.0	3.0	3.0	2.0	3.0		3.0	3.0		3.0	3.0	
Lane Grp Cap (vph)	1106	3319	820	166	1564	1583	249	288	1583	926	986	1583
v/s Ratio Prot	c0.29	0.28		0.01	c0.22		0.01	0.03		c0.21	0.02	
v/s Ratio Perm			0.01			c0.57			0.02			0.55
v/c Ratio	0.90	0.54	0.03	0.13	0.91	0.57	0.20	0.34	0.02	0.80	0.06	0.55
Uniform Delay, d1	47.0	23.3	17.1	66.1	53.3	0.0	63.3	62.9	0.0	49.2	38.4	0.0
Progression Factor	1.00	1.00	1.00	1.00	1.00	1.00	1.00	1.00	1.00	1.00	1.00	1.00
Incremental Delay, d2	10.1	0.6	0.1	0.1	9.7	1.5	0.4	0.7	0.0	4.8	0.0	1.4
Delay (s)	57.1	23.9	17.1	66.2	63.1	1.5	63.7	63.6	0.0	54.0	38.5	1.4
Level of Service	E	C	B	E	E	A	E	E	A	D	D	A
Approach Delay (s)		35.6			39.6			50.5			26.0	
Approach LOS		D			D			D			C	

Intersection Summary			
HCM Average Control Delay	35.0	HCM Level of Service	D
HCM Volume to Capacity ratio	0.84		
Actuated Cycle Length (s)	145.0	Sum of lost time (s)	9.0
Intersection Capacity Utilization	83.4%	ICU Level of Service	E
Analysis Period (min)	15		

c Critical Lane Group

APPENDIX D-4

INTERSECTION CAPACITY ANALYSIS RESULTS – INTERIM BUILD-OUT YEAR (2015) CONDITIONS WITHOUT DEVELOPMENT

HCM Signalized Intersection Capacity Analysis — Kincora
5: Route 7 & Countryside Blvd. — 2015 Future Background

Movement	EBL	EBT	EBR	WBL	WBT	WBR	NBL	NBT	NBR	SBL	SBT	SBR
Lane Configurations												
Ideal Flow (vphpl)	1900	1900	1900	1900	1900	1900	1900	1900	1900	1900	1900	1900
Total Lost time (s)	3.0	3.0	3.0	3.0	3.0	3.0	3.0	3.0	3.0	3.0	3.0	3.0
Lane Util. Factor	0.97	0.86	1.00	0.97	0.86	1.00	0.97	0.95	1.00	0.97	0.95	1.00
Frt	1.00	1.00	0.85	1.00	1.00	0.85	1.00	1.00	0.85	1.00	1.00	0.85
Flt Protected	0.95	1.00	1.00	0.95	1.00	1.00	0.95	1.00	1.00	0.95	1.00	1.00
Satd. Flow (prot)	3433	6408	1583	3433	6408	1583	3433	3539	1583	3433	3539	1583
Flt Permitted	0.95	1.00	1.00	0.95	1.00	1.00	0.95	1.00	1.00	0.95	1.00	1.00
Satd. Flow (perm)	3433	6408	1583	3433	6408	1583	3433	3539	1583	3433	3539	1583
Volume (vph)	287	3088	135	119	2005	108	81	70	151	165	94	240
Peak-hour factor, PHF	0.95	0.95	0.95	0.95	0.95	0.95	0.95	0.95	0.95	0.95	0.95	0.95
Adj. Flow (vph)	302	3251	142	125	2111	114	85	74	159	174	99	253
RTOR Reduction (vph)	0	0	0	0	0	39	0	0	0	0	0	42
Lane Group Flow (vph)	302	3251	142	125	2111	75	85	74	159	174	99	211
Turn Type	Prot		Free	Prot		pm+ov	Prot		Free	Prot		pm+ov
Protected Phases	1	6		5	2	3	7	4		3	8	1
Permitted Phases			Free			2			Free			8
Actuated Green, G (s)	16.6	84.7	150.0	10.5	78.6	90.6	8.2	14.8	150.0	12.0	18.6	35.2
Effective Green, g (s)	20.6	88.7	150.0	14.5	82.6	98.6	12.2	18.8	150.0	16.0	22.6	43.2
Actuated g/C Ratio	0.14	0.59	1.00	0.10	0.55	0.66	0.08	0.13	1.00	0.11	0.15	0.29
Clearance Time (s)	7.0	7.0		7.0	7.0	7.0	7.0	7.0		7.0	7.0	7.0
Vehicle Extension (s)	2.0	2.0		3.0	2.0	2.0	2.0	2.0		2.0	2.0	2.0
Lane Grp Cap (vph)	471	3789	1583	332	3529	1072	279	444	1583	366	533	488
v/s Ratio Prot	c0.09	c0.51		0.04	0.33	0.01	0.02	0.02		c0.05	0.03	c0.06
v/s Ratio Perm			0.09			0.04			0.10			0.07
v/c Ratio	0.64	0.86	0.09	0.38	0.60	0.07	0.30	0.17	0.10	0.48	0.19	0.43
Uniform Delay, d1	61.2	25.4	0.0	63.5	22.6	9.2	64.9	58.6	0.0	63.1	55.7	43.4
Progression Factor	1.00	1.00	1.00	1.00	1.00	1.00	1.00	1.00	1.00	1.00	1.00	1.00
Incremental Delay, d2	2.2	2.8	0.1	0.7	0.8	0.0	0.2	0.1	0.1	0.4	0.1	0.2
Delay (s)	63.4	28.2	0.1	64.2	23.3	9.2	65.1	58.7	0.1	63.4	55.7	43.7
Level of Service	E	C	A	E	C	A	E	E	A	E	E	D
Approach Delay (s)		30.0			24.8			31.1			52.5	
Approach LOS		C			C			C			D	

Intersection Summary

HCM Average Control Delay	30.0	HCM Level of Service	C
HCM Volume to Capacity ratio	0.72		
Actuated Cycle Length (s)	150.0	Sum of lost time (s)	6.0
Intersection Capacity Utilization	71.1%	ICU Level of Service	C
Analysis Period (min)	15		

c Critical Lane Group

HCM Signalized Intersection Capacity Analysis — Kincora
6: Route 7 & Palisade Parkway — 2015 Future Background

Movement	EBL	EBT	EBR	WBL	WBT	WBR	NBL	NBT	NBR	SBL	SBT	SBR
Lane Configurations												
Ideal Flow (vphpl)	1900	1900	1900	1900	1900	1900	1900	1900	1900	1900	1900	1900
Total Lost time (s)	3.0	3.0	3.0	3.0	3.0	3.0	3.0	3.0	3.0	3.0	3.0	3.0
Lane Util. Factor	0.97	0.86	1.00	1.00	0.86	1.00	0.97	1.00	1.00	0.97	1.00	1.00
Frt	1.00	1.00	0.85	1.00	1.00	0.85	1.00	1.00	0.85	1.00	1.00	0.85
Flt Protected	0.95	1.00	1.00	0.95	1.00	1.00	0.95	1.00	1.00	0.95	1.00	1.00
Satd. Flow (prot)	3433	6408	1583	1770	6408	1583	3433	1863	1583	3433	1863	1583
Flt Permitted	0.95	1.00	1.00	0.95	1.00	1.00	0.95	1.00	1.00	0.95	1.00	1.00
Satd. Flow (perm)	3433	6408	1583	1770	6408	1583	3433	1863	1583	3433	1863	1583
Volume (vph)	162	2821	381	123	1951	73	58	34	42	131	82	208
Peak-hour factor, PHF	0.95	0.95	0.95	0.95	0.95	0.95	0.95	0.95	0.95	0.95	0.95	0.95
Adj. Flow (vph)	171	2969	401	129	2054	77	61	36	44	138	86	219
RTOR Reduction (vph)	0	0	0	0	0	0	0	0	23	0	0	41
Lane Group Flow (vph)	171	2969	401	129	2054	77	61	36	21	138	86	178
Turn Type	Prot		Free	Prot		Free	Split		pm+ov	Split		pm+ov
Protected Phases	1	6		5	2		4	4	5	3	3	1
Permitted Phases			Free			Free			4			3
Actuated Green, G (s)	11.0	77.1	135.0	13.6	79.7	135.0	6.2	6.2	19.8	10.1	10.1	21.1
Effective Green, g (s)	15.0	81.1	135.0	17.6	83.7	135.0	10.2	10.2	27.8	14.1	14.1	29.1
Actuated g/C Ratio	0.11	0.60	1.00	0.13	0.62	1.00	0.08	0.08	0.21	0.10	0.10	0.22
Clearance Time (s)	7.0	7.0		7.0	7.0		7.0	7.0	7.0	7.0	7.0	7.0
Vehicle Extension (s)	2.0	4.0		2.0	4.0		3.0	3.0	2.0	3.0	3.0	2.0
Lane Grp Cap (vph)	381	3850	1583	231	3973	1583	259	141	361	359	195	341
v/s Ratio Prot	0.05	c0.46		c0.07	0.32		0.02	0.02	0.01	0.04	0.05	c0.06
v/s Ratio Perm			c0.25			0.05			0.01			0.05
v/c Ratio	0.45	0.77	0.25	0.56	0.52	0.05	0.24	0.26	0.06	0.38	0.44	0.52
Uniform Delay, d1	56.1	20.0	0.0	55.1	14.3	0.0	58.7	58.8	43.1	56.4	56.8	46.8
Progression Factor	1.00	1.00	1.00	1.00	1.00	1.00	1.00	1.00	1.00	1.00	1.00	1.00
Incremental Delay, d2	0.3	1.6	0.4	1.7	0.5	0.1	0.5	1.0	0.0	0.7	1.6	0.7
Delay (s)	56.4	21.6	0.4	56.7	14.8	0.1	59.2	59.8	43.1	57.1	58.3	47.5
Level of Service	E	C	A	E	B	A	E	E	D	E	E	D
Approach Delay (s)		20.9			16.7			54.3			52.6	
Approach LOS		C			B			D			D	

Intersection Summary

HCM Average Control Delay	22.3	HCM Level of Service	C
HCM Volume to Capacity ratio	0.66		
Actuated Cycle Length (s)	135.0	Sum of lost time (s)	9.0
Intersection Capacity Utilization	68.1%	ICU Level of Service	C
Analysis Period (min)	15		

c Critical Lane Group

Movement	WBL	WBR	NBT	NBR	SBL	SBT
Lane Configurations						
Ideal Flow (vphpl)	1900	1900	1900	1900	1900	1900
Total Lost time (s)	3.0	3.0	3.0		3.0	3.0
Lane Util. Factor	1.00	1.00	0.95		1.00	0.95
Frt	1.00	0.85	0.97		1.00	1.00
Flt Protected	0.95	1.00	1.00		0.95	1.00
Satd. Flow (prot)	1770	1583	3440		1770	3539
Flt Permitted	0.95	1.00	1.00		0.44	1.00
Satd. Flow (perm)	1770	1583	3440		825	3539
Volume (vph)	89	191	304	70	159	550
Peak-hour factor, PHF	0.95	0.95	0.95	0.95	0.95	0.95
Adj. Flow (vph)	94	201	320	74	167	579
RTOR Reduction (vph)	0	123	17	0	0	0
Lane Group Flow (vph)	94	78	377	0	167	579
Turn Type		pm+ov			pm+pt	
Protected Phases	4	1	2		1	6
Permitted Phases		4			6	
Actuated Green, G (s)	4.9	12.4	18.5		33.0	33.0
Effective Green, g (s)	8.9	20.4	23.0		37.5	37.5
Actuated g/C Ratio	0.17	0.39	0.44		0.72	0.72
Clearance Time (s)	7.0	7.0	7.5		7.0	7.5
Vehicle Extension (s)	2.0	2.0	2.0		2.0	2.0
Lane Grp Cap (vph)	301	707	1510		798	2533
v/s Ratio Prot	c0.05	0.02	0.11		0.05	c0.16
v/s Ratio Perm		0.03			0.10	
v/c Ratio	0.31	0.11	0.25		0.21	0.23
Uniform Delay, d1	19.1	10.2	9.3		2.5	2.5
Progression Factor	1.00	1.00	1.00		1.00	1.00
Incremental Delay, d2	0.2	0.0	0.0		0.0	0.0
Delay (s)	19.3	10.2	9.3		2.6	2.5
Level of Service	B	B	A		A	A
Approach Delay (s)	13.1		9.3			2.6
Approach LOS	B		A			A

Intersection Summary			
HCM Average Control Delay	6.6	HCM Level of Service	A
HCM Volume to Capacity ratio	0.24		
Actuated Cycle Length (s)	52.4	Sum of lost time (s)	6.0
Intersection Capacity Utilization	37.1%	ICU Level of Service	A
Analysis Period (min)	15		

c Critical Lane Group

Movement	EBL	EBT	EBR	WBL	WBT	WBR	NBL	NBT	NBR	SBL	SBT	SBR
Lane Configurations												
Ideal Flow (vphpl)	1900	1900	1900	1900	1900	1900	1900	1900	1900	1900	1900	1900
Total Lost time (s)		4.0	4.0		4.0	4.0	4.0	4.0	4.0	4.0	4.0	4.0
Lane Util. Factor		1.00	1.00		1.00	1.00	1.00	0.95	1.00	1.00	0.95	1.00
Frt		1.00	0.85		1.00	0.85	1.00	1.00	0.85	1.00	1.00	0.85
Flt Protected		0.95	1.00		0.96	1.00	0.95	1.00	1.00	0.95	1.00	1.00
Satd. Flow (prot)		1778	1583		1783	1583	1770	3539	1583	1770	3539	1583
Flt Permitted		0.67	1.00		0.72	1.00	0.34	1.00	1.00	0.58	1.00	1.00
Satd. Flow (perm)		1257	1583		1335	1583	632	3539	1583	1075	3539	1583
Volume (vph)	41	2	145	71	9	38	35	271	15	9	684	39
Peak-hour factor, PHF	0.95	0.95	0.95	0.95	0.95	0.95	0.95	0.95	0.95	0.95	0.95	0.95
Adj. Flow (vph)	43	2	153	75	9	40	37	285	16	9	720	41
RTOR Reduction (vph)	0	0	132	0	0	35	0	0	5	0	0	14
Lane Group Flow (vph)	0	45	21	0	84	5	37	285	11	9	720	27
Turn Type	Perm		Perm	Perm		Perm	pm+pt		Perm	pm+pt		Perm
Protected Phases		4			8		5	2		1	6	
Permitted Phases	4		4	8		8	2		2	6		6
Actuated Green, G (s)		9.3	9.3		9.3	9.3	61.9	58.7	58.7	57.5	56.5	56.5
Effective Green, g (s)		12.3	12.3		12.3	12.3	67.9	61.7	61.7	63.5	59.5	59.5
Actuated g/C Ratio		0.14	0.14		0.14	0.14	0.75	0.69	0.69	0.71	0.66	0.66
Clearance Time (s)		7.0	7.0		7.0	7.0	7.0	7.0	7.0	7.0	7.0	7.0
Vehicle Extension (s)		2.0	2.0		2.0	2.0	2.0	2.0	2.0	2.0	2.0	2.0
Lane Grp Cap (vph)		172	216		182	216	555	2426	1085	789	2340	1047
v/s Ratio Prot							c0.00	0.08		0.00	c0.20	
v/s Ratio Perm		0.04	0.01		c0.06	0.00	0.05		0.01	0.01		0.02
v/c Ratio		0.26	0.10		0.46	0.03	0.07	0.12	0.01	0.01	0.31	0.03
Uniform Delay, d1		34.8	34.0		35.8	33.7	3.0	4.8	4.5	3.9	6.5	5.3
Progression Factor		1.00	1.00		1.00	1.00	1.00	1.00	1.00	1.00	1.00	1.00
Incremental Delay, d2		0.3	0.1		0.7	0.0	0.0	0.1	0.0	0.0	0.3	0.0
Delay (s)		35.1	34.1		36.5	33.7	3.0	4.9	4.5	3.9	6.8	5.3
Level of Service		D	C		D	C	A	A	A	A	A	A
Approach Delay (s)		34.3			35.6			4.7			6.7	
Approach LOS		C			D			A			A	

Intersection Summary			
HCM Average Control Delay	12.6	HCM Level of Service	B
HCM Volume to Capacity ratio	0.33		
Actuated Cycle Length (s)	90.0	Sum of lost time (s)	16.0
Intersection Capacity Utilization	43.3%	ICU Level of Service	A
Analysis Period (min)	15		

c Critical Lane Group

HCM Signalized Intersection Capacity Analysis — Kincora
10: Gloucester Parkway & Ashburn Village Blvd. — 2015 Future Background

Movement	EBL	EBT	EBR	WBL	WBT	WBR	NBL	NBT	NBR	SBL	SBT	SBR
Lane Configurations												
Ideal Flow (vphpl)	1900	1900	1900	1900	1900	1900	1900	1900	1900	1900	1900	1900
Total Lost time (s)	3.0	3.0	3.0	3.0	3.0	3.0	3.0	3.0	3.0	3.0	3.0	3.0
Lane Util. Factor	1.00	0.95	1.00	0.97	0.95	1.00	0.97	0.95	1.00	0.97	0.95	1.00
Frt	1.00	1.00	0.85	1.00	1.00	0.85	1.00	1.00	0.85	1.00	1.00	0.85
Flt Protected	0.95	1.00	1.00	0.95	1.00	1.00	0.95	1.00	1.00	0.95	1.00	1.00
Satd. Flow (prot)	1770	3539	1583	3433	3539	1583	3433	3539	1583	3433	3539	1583
Flt Permitted	0.95	1.00	1.00	0.95	1.00	1.00	0.95	1.00	1.00	0.95	1.00	1.00
Satd. Flow (perm)	1770	3539	1583	3433	3539	1583	3433	3539	1583	3433	3539	1583
Volume (vph)	257	383	220	205	150	157	116	654	296	318	470	65
Peak-hour factor, PHF	0.95	0.95	0.95	0.95	0.95	0.95	0.95	0.95	0.95	0.95	0.95	0.95
Adj. Flow (vph)	271	403	232	216	158	165	122	688	312	335	495	68
RTOR Reduction (vph)	0	0	0	0	0	0	0	0	0	0	0	0
Lane Group Flow (vph)	271	403	232	216	158	165	122	688	312	335	495	68
Turn Type	Prot		Free	Prot		Free	Prot		Free	Prot		Free
Protected Phases	7	4		3	8		5	2		1	6	
Permitted Phases			Free			Free			Free			Free
Actuated Green, G (s)	20.3	24.5	111.9	12.4	16.6	111.9	9.8	31.4	111.9	15.6	37.2	111.9
Effective Green, g (s)	24.3	28.5	111.9	16.4	20.6	111.9	13.8	35.4	111.9	19.6	41.2	111.9
Actuated g/C Ratio	0.22	0.25	1.00	0.15	0.18	1.00	0.12	0.32	1.00	0.18	0.37	1.00
Clearance Time (s)	7.0	7.0		7.0	7.0		7.0	7.0		7.0	7.0	
Vehicle Extension (s)	3.0	3.0		3.0	3.0		3.0	5.0		3.0	5.0	
Lane Grp Cap (vph)	384	901	1583	503	652	1583	423	1120	1583	601	1303	1583
v/s Ratio Prot	c0.15	c0.11		0.06	0.04		0.04	c0.19		c0.10	0.14	
v/s Ratio Perm			0.15			0.10			0.20			0.04
v/c Ratio	0.71	0.45	0.15	0.43	0.24	0.10	0.29	0.61	0.20	0.56	0.38	0.04
Uniform Delay, d1	40.5	35.1	0.0	43.5	39.0	0.0	44.6	32.5	0.0	42.2	26.0	0.0
Progression Factor	1.00	1.00	1.00	1.00	1.00	1.00	1.00	1.00	1.00	1.00	1.00	1.00
Incremental Delay, d2	5.8	0.4	0.2	0.6	0.2	0.1	0.4	1.5	0.3	1.1	0.4	0.1
Delay (s)	46.3	35.4	0.2	44.1	39.2	0.1	45.0	33.9	0.3	43.3	26.4	0.1
Level of Service	D	D	A	D	D	A	D	C	A	D	C	A
Approach Delay (s)		29.7			29.2			25.8			30.7	
Approach LOS		C			C			C			C	

Intersection Summary			
HCM Average Control Delay	23.6	HCM Level of Service	C
HCM Volume to Capacity ratio	0.58		
Actuated Cycle Length (s)	111.9	Sum of lost time (s)	9.0
Intersection Capacity Utilization	67.2%	ICU Level of Service	C
Analysis Period (min)	15		
c Critical Lane Group			

HCM Signalized Intersection Capacity Analysis — Kincora
11: Smith Switch Road & Loudoun County Parkway — 2015 Future Background

Movement	EBL	EBR	NBL	NBT	SBT	SBR
Lane Configurations						
Ideal Flow (vphpl)	1900	1900	1900	1900	1900	1900
Total Lost time (s)	4.0			4.0	4.0	
Lane Util. Factor	1.00			1.00	1.00	
Frt	0.95			1.00	0.99	
Flt Protected	0.97			1.00	1.00	
Satd. Flow (prot)	1720			1860	1836	
Flt Permitted	0.97			0.24	1.00	
Satd. Flow (perm)	1720			442	1836	
Volume (vph)	117	62	48	1600	1326	160
Peak-hour factor, PHF	0.95	0.95	0.95	0.95	0.95	0.95
Adj. Flow (vph)	123	65	51	1684	1396	168
RTOR Reduction (vph)	15	0	0	0	3	0
Lane Group Flow (vph)	173	0	0	1735	1561	0
Turn Type			Perm			
Protected Phases	4			2	6	
Permitted Phases			2			
Actuated Green, G (s)	13.8			102.0	102.0	
Effective Green, g (s)	16.8			105.0	105.0	
Actuated g/C Ratio	0.13			0.81	0.81	
Clearance Time (s)	7.0			7.0	7.0	
Vehicle Extension (s)	4.0			3.0	3.0	
Lane Grp Cap (vph)	223			358	1485	
v/s Ratio Prot	c0.10				0.85	
v/s Ratio Perm				c3.93		
v/c Ratio	0.78			4.85	1.05	
Uniform Delay, d1	54.7			12.4	12.4	
Progression Factor	1.00			1.00	1.00	
Incremental Delay, d2	16.4			1737.2	38.0	
Delay (s)	71.1			1749.6	50.4	
Level of Service	E			F	D	
Approach Delay (s)	71.1			1749.6	50.4	
Approach LOS	E			F	D	

Intersection Summary			
HCM Average Control Delay	897.0	HCM Level of Service	F
HCM Volume to Capacity ratio	4.29		
Actuated Cycle Length (s)	129.8	Sum of lost time (s)	8.0
Intersection Capacity Utilization	139.8%	ICU Level of Service	H
Analysis Period (min)	15		
c Critical Lane Group			

HCM Signalized Intersection Capacity Analysis
13: Nokes Blvd & Atlantic Blvd

Kincora
2015 Future Background

Movement	EBL	EBT	EBR	WBL	WBT	WBR	NBL	NBT	NBR	SBL	SBT	SBR
Lane Configurations												
Ideal Flow (vphpl)	1900	1900	1900	1900	1900	1900	1900	1900	1900	1900	1900	1900
Total Lost time (s)	4.0	4.0	4.0	3.0	4.0	3.0	4.0	3.0	3.0	3.0	3.0	4.0
Lane Util. Factor	0.97	0.95	1.00	0.97	0.95	1.00	0.97	0.95	1.00	0.97	0.95	1.00
Frt	1.00	1.00	0.85	1.00	1.00	0.85	1.00	1.00	0.85	1.00	1.00	0.85
Flt Protected	0.95	1.00	1.00	0.95	1.00	1.00	0.95	1.00	1.00	0.95	1.00	1.00
Satd. Flow (prot)	3433	3539	1583	3433	3539	1583	3433	3539	1583	3433	3539	1583
Flt Permitted	0.95	1.00	1.00	0.95	1.00	1.00	0.95	1.00	1.00	0.95	1.00	1.00
Satd. Flow (perm)	3433	3539	1583	3433	3539	1583	3433	3539	1583	3433	3539	1583
Volume (vph)	360	302	469	121	399	49	378	86	112	36	178	145
Peak-hour factor, PHF	0.95	0.95	0.95	0.95	0.95	0.95	0.95	0.95	0.95	0.95	0.95	0.95
Adj. Flow (vph)	379	318	494	127	420	52	398	91	118	38	187	153
RTOR Reduction (vph)	0	0	0	0	0	0	0	0	80	0	0	0
Lane Group Flow (vph)	379	318	494	127	420	52	398	91	38	38	187	153
Turn Type	Prot		Free	Prot		Free	Prot		pm+ov	Prot		Free
Protected Phases	1	6		5	2		7	4	5	3	8	
Permitted Phases			Free			Free			4			Free
Actuated Green, G (s)	19.8	68.9	140.0	10.0	59.1	140.0	20.2	28.1	38.1	5.5	13.4	140.0
Effective Green, g (s)	22.8	71.9	140.0	14.0	62.1	140.0	23.2	31.6	45.6	9.5	16.9	140.0
Actuated g/C Ratio	0.16	0.51	1.00	0.10	0.44	1.00	0.17	0.23	0.33	0.07	0.12	1.00
Clearance Time (s)	7.0	7.0		7.0	7.0		7.0	6.5	7.0	7.0	6.5	
Vehicle Extension (s)	2.5	4.0		2.5	4.0		2.5	2.5	2.5	2.5	2.5	
Lane Grp Cap (vph)	559	1818	1583	343	1570	1583	569	799	550	233	427	1583
v/s Ratio Prot	c0.11	0.09		0.04	0.12		c0.12	0.03	0.01	0.01	c0.05	
v/s Ratio Perm			c0.31			0.03			0.02			0.10
v/c Ratio	0.68	0.17	0.31	0.37	0.27	0.03	0.70	0.11	0.07	0.16	0.44	0.10
Uniform Delay, d1	55.1	18.2	0.0	58.9	24.6	0.0	55.1	43.1	32.6	61.5	57.1	0.0
Progression Factor	1.00	1.00	1.00	1.00	1.00	1.00	1.00	1.00	1.00	1.00	1.00	1.00
Incremental Delay, d2	3.0	0.2	0.5	0.5	0.4	0.0	3.5	0.0	0.0	0.2	0.5	0.1
Delay (s)	58.1	18.4	0.5	59.4	25.0	0.0	58.6	43.1	32.6	61.7	57.7	0.1
Level of Service	E	B	A	E	C	A	E	D	C	E	E	A
Approach Delay (s)		23.6			30.1			51.2			34.8	
Approach LOS		C			C			D			C	

Intersection Summary			
HCM Average Control Delay	32.6	HCM Level of Service	C
HCM Volume to Capacity ratio	0.46		
Actuated Cycle Length (s)	140.0	Sum of lost time (s)	11.0
Intersection Capacity Utilization	51.8%	ICU Level of Service	A
Analysis Period (min)	15		
c Critical Lane Group			

HCM Signalized Intersection Capacity Analysis
14: Nokes Blvd. & Cascades Parkway

Kincora
2015 Future Background

Movement	EBL	EBT	EBR	WBL	WBT	WBR	NBL	NBT	NBR	SBL	SBT	SBR
Lane Configurations												
Ideal Flow (vphpl)	1900	1900	1900	1900	1900	1900	1900	1900	1900	1900	1900	1900
Total Lost time (s)	3.0	3.0	3.0	3.0	3.0	3.0	3.0	3.0	3.0	3.0	3.0	3.0
Lane Util. Factor	0.97	1.00	1.00	1.00	0.95	1.00	0.97	0.95	1.00	1.00	0.95	1.00
Frt	1.00	1.00	0.85	1.00	1.00	0.85	1.00	1.00	0.85	1.00	1.00	0.85
Flt Protected	0.95	1.00	1.00	0.95	1.00	1.00	0.95	1.00	1.00	0.95	1.00	1.00
Satd. Flow (prot)	3433	1863	1583	1770	3539	1583	3433	3539	1583	1770	3539	1583
Flt Permitted	0.95	1.00	1.00	0.95	1.00	1.00	0.95	1.00	1.00	0.95	1.00	1.00
Satd. Flow (perm)	3433	1863	1583	1770	3539	1583	3433	3539	1583	1770	3539	1583
Volume (vph)	72	70	79	190	334	18	181	636	220	4	693	116
Peak-hour factor, PHF	0.95	0.95	0.95	0.95	0.95	0.95	0.95	0.95	0.95	0.95	0.95	0.95
Adj. Flow (vph)	76	74	83	200	352	19	169	669	232	4	729	122
RTOR Reduction (vph)	0	0	73	0	0	15	0	0	114	0	0	71
Lane Group Flow (vph)	76	74	10	200	352	4	169	669	118	4	729	51
Turn Type	Prot		Perm	Prot		Perm	Prot		Perm	Prot		Perm
Protected Phases	7	4		3	8		1	6		5	2	
Permitted Phases			4			8			6			2
Actuated Green, G (s)	7.7	8.0	8.0	16.8	17.1	17.1	11.4	49.0	49.0	1.6	39.2	39.2
Effective Green, g (s)	11.7	13.0	13.0	20.8	22.1	22.1	15.4	53.5	53.5	5.6	43.7	43.7
Actuated g/C Ratio	0.11	0.12	0.12	0.20	0.21	0.21	0.15	0.51	0.51	0.05	0.42	0.42
Clearance Time (s)	7.0	8.0	8.0	7.0	8.0	8.0	7.0	7.5	7.5	7.0	7.5	7.5
Vehicle Extension (s)	3.0	3.0	3.0	3.0	3.0	3.0	3.0	3.0	3.0	3.0	3.0	3.0
Lane Grp Cap (vph)	383	231	196	351	746	334	504	1805	807	94	1474	659
v/s Ratio Prot	0.02	0.04		c0.11	c0.10		c0.05	0.19		0.00	c0.21	
v/s Ratio Perm			0.01			0.00			0.07			0.03
v/c Ratio	0.20	0.32	0.05	0.57	0.47	0.01	0.34	0.37	0.15	0.04	0.49	0.08
Uniform Delay, d1	42.3	41.9	40.5	38.0	36.3	32.8	40.2	15.5	13.6	47.1	22.5	18.4
Progression Factor	1.00	1.00	1.00	1.00	1.00	1.00	1.00	1.00	1.00	1.00	1.00	1.00
Incremental Delay, d2	0.3	0.8	0.1	2.1	0.5	0.0	0.4	0.1	0.1	0.2	0.3	0.1
Delay (s)	42.6	42.7	40.6	40.1	36.8	32.8	40.6	15.7	13.7	47.3	22.7	18.5
Level of Service	D	D	D	D	D	C	D	B	B	D	C	B
Approach Delay (s)		41.9			37.8			19.2			22.3	
Approach LOS		D			D			B			C	

Intersection Summary			
HCM Average Control Delay	26.0	HCM Level of Service	C
HCM Volume to Capacity ratio	0.48		
Actuated Cycle Length (s)	104.9	Sum of lost time (s)	9.0
Intersection Capacity Utilization	65.5%	ICU Level of Service	C
Analysis Period (min)	15		
c Critical Lane Group			

Movement	EBL	EBR	NBL	NBT	SBT	SBR
Lane Configurations						
Ideal Flow (vphpl)	1900	1900	1900	1900	1900	1900
Total Lost time (s)	3.0	3.0	3.0	3.0	3.0	3.0
Lane Util. Factor	1.00	1.00	1.00	0.95	0.95	1.00
Frt	1.00	0.85	1.00	1.00	1.00	0.85
Flt Protected	0.95	1.00	0.95	1.00	1.00	1.00
Satd. Flow (prot)	1770	1583	1770	3539	3539	1583
Flt Permitted	0.95	1.00	0.23	1.00	1.00	1.00
Satd. Flow (perm)	1770	1583	427	3539	3539	1583
Volume (vph)	97	54	172	1026	782	142
Peak-hour factor, PHF	0.95	0.95	0.95	0.95	0.95	0.95
Adj. Flow (vph)	102	57	181	1080	823	149
RTOR Reduction (vph)	0	46	0	0	0	52
Lane Group Flow (vph)	102	11	181	1080	823	97
Turn Type		Perm	pm+pt			pm+ov
Protected Phases	4		1	6	2	4
Permitted Phases		4	6			2
Actuated Green, G (s)	7.8	7.8	42.3	42.3	26.2	34.0
Effective Green, g (s)	11.8	11.8	45.8	45.8	29.7	41.5
Actuated g/C Ratio	0.19	0.19	0.72	0.72	0.47	0.65
Clearance Time (s)	7.0	7.0	7.0	6.5	6.5	7.0
Vehicle Extension (s)	3.0	3.0	4.0	4.0	4.0	3.0
Lane Grp Cap (vph)	328	294	584	2549	1653	1108
v/s Ratio Prot	c0.06		0.06	c0.31	c0.23	0.02
v/s Ratio Perm		0.01	0.16			0.05
v/c Ratio	0.31	0.04	0.31	0.42	0.50	0.09
Uniform Delay, d1	22.4	21.2	4.0	3.6	11.8	4.1
Progression Factor	1.00	1.00	1.00	1.00	1.00	1.00
Incremental Delay, d2	0.5	0.1	0.4	0.2	0.3	0.0
Delay (s)	22.9	21.3	4.5	3.7	12.1	4.1
Level of Service	C	C	A	A	B	A
Approach Delay (s)	22.3			3.8	10.9	
Approach LOS	C			A	B	

Intersection Summary			
HCM Average Control Delay	7.9	HCM Level of Service	A
HCM Volume to Capacity ratio	0.44		
Actuated Cycle Length (s)	63.6	Sum of lost time (s)	9.0
Intersection Capacity Utilization	46.5%	ICU Level of Service	A
Analysis Period (min)	15		

c Critical Lane Group

Movement	EBL	EBT	EBR	WBL	WBT	WBR	NBL	NBT	NBR	SBL	SBT	SBR
Lane Configurations												
Ideal Flow (vphpl)	1900	1900	1900	1900	1900	1900	1900	1900	1900	1900	1900	1900
Total Lost time (s)	3.0	3.0	3.0	3.0	3.0	3.0	3.0	3.0	3.0	3.0	3.0	3.0
Lane Util. Factor	1.00	0.91	1.00	1.00	0.91	1.00	1.00	0.95	1.00	0.97	0.95	1.00
Frt	1.00	1.00	0.85	1.00	1.00	0.85	1.00	1.00	0.85	1.00	1.00	0.85
Flt Protected	0.95	1.00	1.00	0.95	1.00	1.00	0.95	1.00	1.00	0.95	1.00	1.00
Satd. Flow (prot)	1770	5085	1583	1770	5085	1583	1770	3539	1583	3433	3539	1583
Flt Permitted	0.95	1.00	1.00	0.95	1.00	1.00	0.95	1.00	1.00	0.95	1.00	1.00
Satd. Flow (perm)	1770	5085	1583	1770	5085	1583	1770	3539	1583	3433	3539	1583
Volume (vph)	226	1267	252	482	410	482	62	227	110	789	535	427
Peak-hour factor, PHF	0.95	0.95	0.95	0.95	0.95	0.95	0.95	0.95	0.95	0.95	0.95	0.95
Adj. Flow (vph)	238	1334	265	507	432	507	65	239	116	831	563	449
RTOR Reduction (vph)	0	0	0	0	0	0	0	0	8	0	0	68
Lane Group Flow (vph)	238	1334	265	507	432	507	65	239	108	831	563	381
Turn Type	Prot		Free	Prot		Free	Prot		pm+ov	Prot		pm+ov
Protected Phases	1	6		5	2		3	8	5	7	4	1
Permitted Phases			Free			Free			8			4
Actuated Green, G (s)	26.1	35.1	130.0	20.8	29.8	130.0	4.8	14.1	34.9	32.5	41.8	67.9
Effective Green, g (s)	30.1	39.1	130.0	24.8	33.8	130.0	8.8	17.6	42.4	36.5	45.3	75.4
Actuated g/C Ratio	0.23	0.30	1.00	0.19	0.26	1.00	0.07	0.14	0.33	0.28	0.35	0.58
Clearance Time (s)	7.0	7.0		7.0	7.0		7.0	6.5	7.0	7.0	6.5	7.0
Vehicle Extension (s)	2.0	3.0		2.0	3.0		2.0	2.0	2.0	2.0	2.0	2.0
Lane Grp Cap (vph)	410	1529	1583	338	1322	1583	120	479	553	964	1233	955
v/s Ratio Prot	c0.13	c0.26		c0.29	0.08		0.04	0.07	0.04	c0.24	c0.16	0.09
v/s Ratio Perm			0.17			0.32			0.03			0.15
v/c Ratio	0.58	0.87	0.17	1.50	0.33	0.32	0.54	0.50	0.20	0.86	0.46	0.40
Uniform Delay, d1	44.3	43.1	0.0	52.6	38.9	0.0	58.6	52.1	31.5	44.4	32.8	14.9
Progression Factor	1.00	1.00	1.00	0.89	0.91	1.00	1.00	1.00	1.00	1.00	1.00	1.00
Incremental Delay, d2	1.4	7.2	0.2	239.9	0.7	0.5	2.7	0.3	0.1	7.8	0.1	0.1
Delay (s)	45.7	50.2	0.2	286.6	36.0	0.5	61.3	52.4	31.6	52.1	32.9	15.0
Level of Service	D	D	A	F	D	A	E	D	C	D	C	B
Approach Delay (s)		42.4			111.4			48.0			37.2	
Approach LOS		D			F			D			D	

Intersection Summary			
HCM Average Control Delay	59.1	HCM Level of Service	E
HCM Volume to Capacity ratio	0.91		
Actuated Cycle Length (s)	130.0	Sum of lost time (s)	6.0
Intersection Capacity Utilization	93.3%	ICU Level of Service	F
Analysis Period (min)	15		

c Critical Lane Group

Movement	EBL	EBT	EBR	WBL	WBT	WBR	NBL	NBT	NBR	SBL	SBT	SBR
Lane Configurations												
Ideal Flow (vphpl)	1900	1900	1900	1900	1900	1900	1900	1900	1900	1900	1900	1900
Total Lost time (s)	3.0	3.0	3.0	3.0	3.0	3.0	3.0	3.0	3.0	3.0	3.0	
Lane Util. Factor	1.00	0.91	1.00	1.00	0.91	1.00	1.00	0.95	1.00	1.00	0.95	
Frt	1.00	1.00	0.85	1.00	1.00	0.85	1.00	1.00	0.85	1.00	0.90	
Flt Protected	0.95	1.00	1.00	0.95	1.00	1.00	0.95	1.00	1.00	0.95	1.00	
Satd. Flow (prot)	1770	5085	1583	1770	5085	1583	1770	3539	1583	1770	3189	
Flt Permitted	0.95	1.00	1.00	0.95	1.00	1.00	0.73	1.00	1.00	0.54	1.00	
Satd. Flow (perm)	1770	5085	1583	1770	5085	1583	1354	3539	1583	1015	3189	
Volume (vph)	125	2035	55	240	836	202	72	63	119	104	14	28
Peak-hour factor, PHF	0.95	0.95	0.95	0.95	0.95	0.95	0.95	0.95	0.95	0.95	0.95	0.95
Adj. Flow (vph)	132	2142	58	253	880	213	76	66	125	109	15	29
RTOR Reduction (vph)	0	0	26	0	0	54	0	0	0	0	25	0
Lane Group Flow (vph)	132	2142	32	253	880	159	76	66	125	109	19	0
Turn Type	Prot		pm+ov	Prot		pm+ov	pm+pt		Free	pm+pt		
Protected Phases	1	6	3	5	2	7	3	8		7	4	
Permitted Phases			6			2	8		Free	4		
Actuated Green, G (s)	7.0	63.0	67.0	22.2	77.7	91.7	10.3	6.3	130.0	25.3	16.3	
Effective Green, g (s)	11.0	66.5	72.5	25.7	81.2	97.2	15.8	9.8	130.0	28.8	19.8	
Actuated g/C Ratio	0.08	0.51	0.56	0.20	0.62	0.75	0.12	0.08	1.00	0.22	0.15	
Clearance Time (s)	7.0	6.5	5.0	6.5	6.5	5.0	5.0	6.5		5.0	6.5	
Vehicle Extension (s)	2.0	3.0	2.0	2.0	3.0	2.0	2.0	2.0		2.0	2.0	
Lane Grp Cap (vph)	150	2601	919	350	3176	1220	184	267	1583	318	486	
v/s Ratio Prot	c0.07	c0.42	0.00	c0.14	0.17	0.02	c0.02	0.02		c0.04	0.01	
v/s Ratio Perm			0.02			0.08	0.03		0.08	c0.03		
v/c Ratio	0.88	0.82	0.04	0.72	0.28	0.13	0.41	0.25	0.08	0.34	0.04	
Uniform Delay, d1	58.8	26.8	13.0	48.8	11.1	4.6	52.4	56.6	0.0	42.0	47.0	
Progression Factor	1.07	0.58	0.19	1.00	1.00	1.00	1.00	1.00	1.00	1.00	1.00	
Incremental Delay, d2	26.5	1.8	0.0	6.1	0.2	0.0	0.5	0.2	0.1	0.2	0.2	
Delay (s)	89.3	17.4	2.4	55.0	11.3	4.6	53.0	56.8	0.1	42.2	47.1	
Level of Service	F	B	A	D	B	A	D	E	A	D	D	
Approach Delay (s)		21.1			18.4			29.2			43.7	
Approach LOS		C			B			C			D	

Intersection Summary			
HCM Average Control Delay	21.6	HCM Level of Service	C
HCM Volume to Capacity ratio	0.70		
Actuated Cycle Length (s)	130.0	Sum of lost time (s)	9.0
Intersection Capacity Utilization	75.0%	ICU Level of Service	D
Analysis Period (min)	15		

c Critical Lane Group

Movement	EBL	EBT	EBR	WBL	WBT	WBR	NBL	NBT	NBR	SBL	SBT	SBR
Lane Configurations												
Ideal Flow (vphpl)	1900	1900	1900	1900	1900	1900	1900	1900	1900	1900	1900	1900
Total Lost time (s)	3.0	3.0	3.0	3.0	3.0	3.0	3.0	3.0	3.0	3.0	3.0	3.0
Lane Util. Factor	0.97	0.86	1.00	0.97	0.86	1.00	0.97	0.95	1.00	0.97	0.95	1.00
Frt	1.00	1.00	0.85	1.00	1.00	0.85	1.00	1.00	0.85	1.00	1.00	0.85
Flt Protected	0.95	1.00	1.00	0.95	1.00	1.00	0.95	1.00	1.00	0.95	1.00	1.00
Satd. Flow (prot)	3433	6408	1583	3433	6408	1583	3433	3539	1583	3433	3539	1583
Flt Permitted	0.95	1.00	1.00	0.95	1.00	1.00	0.95	1.00	1.00	0.95	1.00	1.00
Satd. Flow (perm)	3433	6408	1583	3433	6408	1583	3433	3539	1583	3433	3539	1583
Volume (vph)	208	3396	227	436	2447	286	210	5	94	149	53	62
Peak-hour factor, PHF	0.95	0.95	0.95	0.95	0.95	0.95	0.95	0.95	0.95	0.95	0.95	0.95
Adj. Flow (vph)	219	3575	239	459	2576	301	221	5	99	157	56	65
RTOR Reduction (vph)	0	0	99	0	0	0	0	0	0	0	0	0
Lane Group Flow (vph)	219	3575	140	459	2576	301	221	5	99	157	56	65
Turn Type	Prot		Perm	Prot		Free	Prot		Free	Prot		Free
Protected Phases	1	6		5	2		7	4		3	8	
Permitted Phases			6			Free			Free			Free
Actuated Green, G (s)	10.7	81.1	81.1	18.9	89.3	145.0	8.0	1.4	145.0	15.6	9.0	145.0
Effective Green, g (s)	14.7	85.1	85.1	22.9	93.3	145.0	12.0	5.4	145.0	19.6	13.0	145.0
Actuated g/C Ratio	0.10	0.59	0.59	0.16	0.64	1.00	0.08	0.04	1.00	0.14	0.09	1.00
Clearance Time (s)	7.0	7.0	7.0	7.0	7.0		7.0	7.0		7.0	7.0	
Vehicle Extension (s)	2.0	3.0	3.0	2.0	3.0		3.0	3.0		3.0	3.0	
Lane Grp Cap (vph)	348	3761	929	542	4123	1583	284	132	1583	464	317	1583
v/s Ratio Prot	0.06	c0.56		c0.13	0.40		c0.06	0.00		c0.05	0.02	
v/s Ratio Perm			0.09			c0.19			0.06			0.04
v/c Ratio	0.63	0.95	0.15	0.85	0.62	0.19	0.78	0.04	0.06	0.34	0.18	0.04
Uniform Delay, d1	62.5	28.0	13.6	59.3	15.4	0.0	65.2	67.3	0.0	56.8	61.0	0.0
Progression Factor	1.00	1.00	1.00	1.00	1.00	1.00	1.00	1.00	1.00	1.00	1.00	1.00
Incremental Delay, d2	2.6	7.0	0.3	11.2	0.7	0.3	12.6	0.1	0.1	0.4	0.3	0.0
Delay (s)	65.1	35.0	13.9	70.6	16.1	0.3	77.8	67.4	0.1	57.3	61.3	0.0
Level of Service	E	C	B	E	B	A	E	E	A	E	E	A
Approach Delay (s)		35.4			22.2			54.0			44.7	
Approach LOS		D			C			D			D	

Intersection Summary			
HCM Average Control Delay	30.9	HCM Level of Service	C
HCM Volume to Capacity ratio	0.84		
Actuated Cycle Length (s)	145.0	Sum of lost time (s)	9.0
Intersection Capacity Utilization	84.3%	ICU Level of Service	E
Analysis Period (min)	15		

c Critical Lane Group

Movement	EBL	EBT	EBR	WBL	WBT	WBR	NBL	NBT	NBR	SBL	SBT	SBR
Lane Configurations												
Ideal Flow (vphpl)	1900	1900	1900	1900	1900	1900	1900	1900	1900	1900	1900	1900
Total Lost time (s)	3.0	3.0	3.0	3.0	3.0	3.0	3.0	3.0	3.0	3.0	3.0	3.0
Lane Util. Factor	0.97	0.86	1.00	0.97	0.86	1.00	0.97	0.95	1.00	0.97	0.95	1.00
Frt	1.00	1.00	0.85	1.00	1.00	0.85	1.00	1.00	0.85	1.00	1.00	0.85
Flt Protected	0.95	1.00	1.00	0.95	1.00	1.00	0.95	1.00	1.00	0.95	1.00	1.00
Satd. Flow (prot)	3433	6408	1583	3433	6408	1583	3433	3539	1583	3433	3539	1583
Flt Permitted	0.95	1.00	1.00	0.95	1.00	1.00	0.95	1.00	1.00	0.95	1.00	1.00
Satd. Flow (perm)	3433	6408	1583	3433	6408	1583	3433	3539	1583	3433	3539	1583
Volume (vph)	287	3088	135	119	2005	108	81	70	151	165	94	240
Peak-hour factor, PHF	0.95	0.95	0.95	0.95	0.95	0.95	0.95	0.95	0.95	0.95	0.95	0.95
Adj. Flow (vph)	302	3251	142	125	2111	114	85	74	159	174	99	253
RTOR Reduction (vph)	0	0	0	0	0	39	0	0	0	0	0	42
Lane Group Flow (vph)	302	3251	142	125	2111	75	85	74	159	174	99	211
Turn Type	Prot		Free	Prot		pm+ov	Prot		Free	Prot		pm+ov
Protected Phases	1	6		5	2	3	7	4		3	8	1
Permitted Phases			Free			2			Free			8
Actuated Green, G (s)	16.6	84.7	150.0	10.5	78.6	90.6	8.2	14.8	150.0	12.0	18.6	35.2
Effective Green, g (s)	20.6	88.7	150.0	14.5	82.6	98.6	12.2	18.8	150.0	16.0	22.6	43.2
Actuated g/C Ratio	0.14	0.59	1.00	0.10	0.55	0.66	0.08	0.13	1.00	0.11	0.15	0.29
Clearance Time (s)	7.0	7.0		7.0	7.0	7.0	7.0	7.0		7.0	7.0	7.0
Vehicle Extension (s)	2.0	2.0		3.0	2.0	2.0	2.0	2.0		2.0	2.0	2.0
Lane Grp Cap (vph)	471	3789	1583	332	3529	1072	279	444	1583	366	533	488
v/s Ratio Prot	c0.09	c0.51		0.04	0.33	0.01	0.02	0.02		c0.05	0.03	c0.06
v/s Ratio Perm			0.09			0.04			0.10			0.07
v/c Ratio	0.64	0.86	0.09	0.38	0.60	0.07	0.30	0.17	0.10	0.48	0.19	0.43
Uniform Delay, d1	61.2	25.4	0.0	63.5	22.6	9.2	64.9	58.6	0.0	63.1	55.7	43.4
Progression Factor	1.00	1.00	1.00	1.00	1.00	1.00	1.00	1.00	1.00	1.00	1.00	1.00
Incremental Delay, d2	2.2	2.8	0.1	0.7	0.8	0.0	0.2	0.1	0.1	0.4	0.1	0.2
Delay (s)	63.4	28.2	0.1	64.2	23.3	9.2	65.1	58.7	0.1	63.4	55.7	43.7
Level of Service	E	C	A	E	C	A	E	E	A	E	E	D
Approach Delay (s)		30.0			24.8			31.1			52.5	
Approach LOS		C			C			C			D	

Intersection Summary			
HCM Average Control Delay	30.0	HCM Level of Service	C
HCM Volume to Capacity ratio	0.72		
Actuated Cycle Length (s)	150.0	Sum of lost time (s)	6.0
Intersection Capacity Utilization	71.1%	ICU Level of Service	C
Analysis Period (min)	15		

c Critical Lane Group

Movement	EBL	EBT	EBR	WBL	WBT	WBR	NBL	NBT	NBR	SBL	SBT	SBR
Lane Configurations												
Ideal Flow (vphpl)	1900	1900	1900	1900	1900	1900	1900	1900	1900	1900	1900	1900
Total Lost time (s)	3.0	3.0	3.0	3.0	3.0	3.0	3.0	3.0	3.0	3.0	3.0	3.0
Lane Util. Factor	0.97	0.86	1.00	1.00	0.86	1.00	0.97	1.00	1.00	0.97	1.00	1.00
Frt	1.00	1.00	0.85	1.00	1.00	0.85	1.00	1.00	0.85	1.00	1.00	0.85
Flt Protected	0.95	1.00	1.00	0.95	1.00	1.00	0.95	1.00	1.00	0.95	1.00	1.00
Satd. Flow (prot)	3433	6408	1583	1770	6408	1583	3433	1863	1583	3433	1863	1583
Flt Permitted	0.95	1.00	1.00	0.95	1.00	1.00	0.95	1.00	1.00	0.95	1.00	1.00
Satd. Flow (perm)	3433	6408	1583	1770	6408	1583	3433	1863	1583	3433	1863	1583
Volume (vph)	162	2821	381	123	1951	73	58	34	42	131	82	208
Peak-hour factor, PHF	0.95	0.95	0.95	0.95	0.95	0.95	0.95	0.95	0.95	0.95	0.95	0.95
Adj. Flow (vph)	171	2969	401	129	2054	77	61	36	44	138	86	219
RTOR Reduction (vph)	0	0	0	0	0	0	0	0	9	0	0	33
Lane Group Flow (vph)	171	2969	401	129	2054	77	61	36	35	138	86	186
Turn Type	Prot		Free	Prot		Free	Prot		pm+ov	Prot		pm+ov
Protected Phases	1	6		5	2		7	4	5	3	8	1
Permitted Phases			Free			Free			4			8
Actuated Green, G (s)	10.8	65.9	120.0	11.5	66.6	120.0	4.8	5.4	16.9	9.2	9.8	20.6
Effective Green, g (s)	14.8	69.9	120.0	15.5	70.6	120.0	8.8	9.4	24.9	13.2	13.8	28.6
Actuated g/C Ratio	0.12	0.58	1.00	0.13	0.59	1.00	0.07	0.08	0.21	0.11	0.12	0.24
Clearance Time (s)	7.0	7.0		7.0	7.0		7.0	7.0	7.0	7.0	7.0	7.0
Vehicle Extension (s)	2.0	4.0		2.0	4.0		3.0	3.0	2.0	3.0	3.0	2.0
Lane Grp Cap (vph)	423	3733	1583	229	3770	1583	252	146	368	378	214	417
v/s Ratio Prot	0.05	c0.46		c0.07	0.32		0.02	0.02	0.01	c0.04	0.05	c0.06
v/s Ratio Perm			c0.25			0.05			0.01			0.06
v/c Ratio	0.40	0.80	0.25	0.56	0.54	0.05	0.24	0.25	0.10	0.37	0.40	0.45
Uniform Delay, d1	48.5	19.5	0.0	49.1	15.0	0.0	52.5	52.0	38.4	49.5	49.3	39.0
Progression Factor	1.00	1.00	1.00	1.00	1.00	1.00	1.00	1.00	1.00	1.00	1.00	1.00
Incremental Delay, d2	0.2	1.8	0.4	1.9	0.6	0.1	0.5	0.9	0.0	0.6	1.2	0.3
Delay (s)	48.8	21.3	0.4	51.0	15.5	0.1	53.0	52.9	38.5	50.1	50.5	39.2
Level of Service	D	C	A	D	B	A	D	D	D	D	D	D
Approach Delay (s)		20.3			17.0			48.4			44.8	
Approach LOS		C			B			D			D	

Intersection Summary			
HCM Average Control Delay	21.5	HCM Level of Service	C
HCM Volume to Capacity ratio	0.67		
Actuated Cycle Length (s)	120.0	Sum of lost time (s)	9.0
Intersection Capacity Utilization	68.1%	ICU Level of Service	C
Analysis Period (min)	15		

c Critical Lane Group

Movement	EBL	EBR	NBL	NBT	SBT	SBR
Lane Configurations						
Ideal Flow (vphpl)	1900	1900	1900	1900	1900	1900
Total Lost time (s)	4.0			4.0	4.0	
Lane Util. Factor	1.00			1.00	1.00	
Frt	0.99			1.00	0.99	
Flt Protected	0.95			1.00	1.00	
Satd. Flow (prot)	1767			1862	1836	
Flt Permitted	0.95			0.99	1.00	
Satd. Flow (perm)	1767			1840	1836	
Volume (vph)	107	5	11	947	806	98
Peak-hour factor, PHF	0.95	0.95	0.95	0.95	0.95	0.95
Adj. Flow (vph)	113	5	12	997	848	103
RTOR Reduction (vph)	1	0	0	0	4	0
Lane Group Flow (vph)	117	0	0	1009	947	0
Turn Type			Perm			
Protected Phases	4			2	6	
Permitted Phases			2			
Actuated Green, G (s)	8.6			61.8	61.8	
Effective Green, g (s)	11.6			64.8	64.8	
Actuated g/C Ratio	0.14			0.77	0.77	
Clearance Time (s)	7.0			7.0	7.0	
Vehicle Extension (s)	2.0			3.0	3.0	
Lane Grp Cap (vph)	243			1413	1410	
v/s Ratio Prot	c0.07				0.52	
v/s Ratio Perm				c0.55		
v/c Ratio	0.48			0.71	0.67	
Uniform Delay, d1	33.6			5.0	4.7	
Progression Factor	1.00			1.00	1.00	
Incremental Delay, d2	0.6			1.7	1.3	
Delay (s)	34.2			6.8	6.0	
Level of Service	C			A	A	
Approach Delay (s)	34.2			6.8	6.0	
Approach LOS	C			A	A	

Intersection Summary			
HCM Average Control Delay	8.0	HCM Level of Service	A
HCM Volume to Capacity ratio	0.68		
Actuated Cycle Length (s)	84.4	Sum of lost time (s)	8.0
Intersection Capacity Utilization	71.5%	ICU Level of Service	C
Analysis Period (min)	15		

c Critical Lane Group

Movement	EBL	EBT	EBR	WBL	WBT	WBR	NBL	NBT	NBR	SBL	SBT	SBR
Lane Configurations												
Ideal Flow (vphpl)	1900	1900	1900	1900	1900	1900	1900	1900	1900	1900	1900	1900
Total Lost time (s)	3.0	3.0	3.0	3.0	3.0	3.0	3.0	3.0	3.0	3.0	3.0	3.0
Lane Util. Factor	0.97	0.86	1.00	0.97	0.86	1.00	0.97	0.95	1.00	0.97	0.95	1.00
Frt	1.00	1.00	0.85	1.00	1.00	0.85	1.00	1.00	0.85	1.00	1.00	0.85
Flt Protected	0.95	1.00	1.00	0.95	1.00	1.00	0.95	1.00	1.00	0.95	1.00	1.00
Satd. Flow (prot)	3433	6408	1583	3433	6408	1583	3433	3539	1583	3433	3539	1583
Flt Permitted	0.95	1.00	1.00	0.95	1.00	1.00	0.95	1.00	1.00	0.95	1.00	1.00
Satd. Flow (perm)	3433	6408	1583	3433	6408	1583	3433	3539	1583	3433	3539	1583
Volume (vph)	451	1844	127	23	1422	847	143	49	44	673	41	601
Peak-hour factor, PHF	0.95	0.95	0.95	0.95	0.95	0.95	0.95	0.95	0.95	0.95	0.95	0.95
Adj. Flow (vph)	475	1941	134	24	1497	892	151	52	46	708	43	633
RTOR Reduction (vph)	0	0	55	0	0	0	0	0	0	0	0	0
Lane Group Flow (vph)	475	1941	79	24	1497	892	151	52	46	708	43	633
Turn Type	Prot		Perm	Prot		Free	Prot		Free	Prot		Free
Protected Phases	1	6		5	2		7	4		3	8	
Permitted Phases			6			Free			Free			Free
Actuated Green, G (s)	15.6	82.0	82.0	3.0	69.4	145.0	18.8	4.8	145.0	27.2	13.2	145.0
Effective Green, g (s)	19.6	86.0	86.0	7.0	73.4	145.0	22.8	8.8	145.0	31.2	17.2	145.0
Actuated g/C Ratio	0.14	0.59	0.59	0.05	0.51	1.00	0.16	0.06	1.00	0.22	0.12	1.00
Clearance Time (s)	7.0	7.0	7.0	7.0	7.0		7.0	7.0		7.0	7.0	
Vehicle Extension (s)	2.0	3.0	3.0	2.0	3.0		3.0	3.0		3.0	3.0	
Lane Grp Cap (vph)	464	3801	939	166	3244	1583	540	215	1583	739	420	1583
v/s Ratio Prot	c0.14	0.30		0.01	0.23		0.04	0.01		c0.21	0.01	
v/s Ratio Perm			0.05			c0.56			0.03			0.40
v/c Ratio	1.02	0.51	0.08	0.14	0.46	0.56	0.28	0.24	0.03	0.96	0.10	0.40
Uniform Delay, d1	62.7	17.2	12.6	66.1	23.1	0.0	53.9	64.9	0.0	56.3	57.0	0.0
Progression Factor	1.00	1.00	1.00	1.00	1.00	1.00	1.00	1.00	1.00	1.00	1.00	1.00
Incremental Delay, d2	47.9	0.5	0.2	0.1	0.5	1.5	0.3	0.6	0.0	23.0	0.1	0.8
Delay (s)	110.6	17.7	12.8	66.3	23.5	1.5	54.1	65.5	0.0	79.3	57.1	0.8
Level of Service	F	B	B	E	C	A	D	E	A	E	E	A
Approach Delay (s)		34.8			15.8			46.5			42.7	
Approach LOS		C			B			D			D	

Intersection Summary			
HCM Average Control Delay	29.9	HCM Level of Service	C
HCM Volume to Capacity ratio	0.72		
Actuated Cycle Length (s)	145.0	Sum of lost time (s)	6.0
Intersection Capacity Utilization	69.3%	ICU Level of Service	C
Analysis Period (min)	15		

c Critical Lane Group

Movement	EBL	EBT	EBR	WBL	WBT	WBR	NBL	NBT	NBR	SBL	SBT	SBR
Lane Configurations												
Ideal Flow (vphpl)	1900	1900	1900	1900	1900	1900	1900	1900	1900	1900	1900	1900
Total Lost time (s)		4.0	4.0	4.0		4.0	4.0	4.0	4.0	4.0	4.0	4.0
Lane Util. Factor		1.00	1.00	1.00		1.00	1.00	0.95	1.00	1.00	0.95	1.00
Frt		1.00	0.85	1.00		0.85	1.00	1.00	0.85	1.00	1.00	0.85
Flt Protected		0.95	1.00	0.95		1.00	0.95	1.00	1.00	0.95	1.00	1.00
Satd. Flow (prot)		1770	1583	1770		1583	1770	3539	1583	1770	3539	1583
Flt Permitted		0.76	1.00	0.11		1.00	0.95	1.00	1.00	0.95	1.00	1.00
Satd. Flow (perm)		1410	1583	206		1583	1770	3539	1583	1770	3539	1583
Volume (vph)	495	0	387	56	0	168	230	1634	12	35	1464	236
Peak-hour factor, PHF	0.95	0.95	0.95	0.95	0.95	0.95	0.95	0.95	0.95	0.95	0.95	0.95
Adj. Flow (vph)	521	0	407	59	0	177	242	1720	13	37	1541	248
RTOR Reduction (vph)	0	0	152	0	0	119	0	0	3	0	0	69
Lane Group Flow (vph)	0	521	255	59	0	58	242	1720	10	37	1541	179
Turn Type	Perm		Perm	Perm		Perm	Prot		Perm	Prot		Perm
Protected Phases		4			8		5	2		1	6	
Permitted Phases	4		4	8		8			2			6
Actuated Green, G (s)		61.1	61.1	61.1		61.1	29.7	104.9	104.9	7.4	82.6	82.6
Effective Green, g (s)		64.1	64.1	64.1		64.1	32.7	107.9	107.9	10.4	85.6	85.6
Actuated g/C Ratio		0.33	0.33	0.33		0.33	0.17	0.56	0.56	0.05	0.44	0.44
Clearance Time (s)		7.0	7.0	7.0		7.0	7.0	7.0	7.0	7.0	7.0	7.0
Vehicle Extension (s)		2.0	2.0	2.0		2.0	2.0	2.0	2.0	2.0	2.0	2.0
Lane Grp Cap (vph)		465	522	68		522	298	1964	879	95	1558	697
v/s Ratio Prot							c0.14	c0.49		0.02	c0.44	
v/s Ratio Perm		c0.37	0.16	0.29		0.04			0.01			0.11
v/c Ratio		1.12	0.49	0.87		0.11	0.81	0.88	0.01	0.39	0.99	0.26
Uniform Delay, d1		65.2	52.0	61.2		45.3	77.9	37.4	19.4	88.9	53.9	34.3
Progression Factor		1.00	1.00	1.00		1.00	1.00	1.00	1.00	1.00	1.00	1.00
Incremental Delay, d2		78.9	0.3	63.1		0.0	14.6	4.6	0.0	1.0	19.9	0.1
Delay (s)		144.1	52.3	124.2		45.4	92.5	42.0	19.4	89.9	73.9	34.4
Level of Service		F	D	F		D	F	D	B	F	E	C
Approach Delay (s)		103.8			65.1			48.1			68.8	
Approach LOS		F			E			D			E	

Intersection Summary				
HCM Average Control Delay	66.9	HCM Level of Service	E	
HCM Volume to Capacity ratio	1.03			
Actuated Cycle Length (s)	194.4	Sum of lost time (s)	16.0	
Intersection Capacity Utilization	97.3%	ICU Level of Service	F	
Analysis Period (min)	15			

c Critical Lane Group

Movement	EBL	EBT	WBT	WBR	SWL	SWR
Lane Configurations						
Sign Control		Free	Free		Stop	
Grade		0%	0%		0%	
Volume (veh/h)	0	1012	47	0	0	10
Peak Hour Factor	0.92	0.92	0.92	0.92	0.92	0.92
Hourly flow rate (vph)	0	1100	51	0	0	11
Pedestrians						
Lane Width (ft)						
Walking Speed (ft/s)						
Percent Blockage						
Right turn flare (veh)						
Median type					None	
Median storage veh)						
Upstream signal (ft)						
pX, platoon unblocked						
vC, conflicting volume	51				601	26
vC1, stage 1 conf vol						
vC2, stage 2 conf vol						
vCu, unblocked vol	51				601	26
tC, single (s)	4.1				6.8	6.9
tC, 2 stage (s)						
tF (s)	2.2				3.5	3.3
p0 queue free %	100				100	99
cM capacity (veh/h)	1553				432	1044

Direction, Lane #	EB 1	EB 2	WB 1	WB 2	SW 1
Volume Total	550	550	26	26	11
Volume Left	0	0	0	0	0
Volume Right	0	0	0	0	11
cSH	1700	1700	1700	1700	1044
Volume to Capacity	0.32	0.32	0.02	0.02	0.01
Queue Length 95th (ft)	0	0	0	0	1
Control Delay (s)	0.0	0.0	0.0	0.0	8.5
Lane LOS					A
Approach Delay (s)	0.0		0.0		8.5
Approach LOS					A

Intersection Summary			
Average Delay	0.1		
Intersection Capacity Utilization	31.3%	ICU Level of Service	A
Analysis Period (min)	15		

HCM Signalized Intersection Capacity Analysis — Kincora
22: Church Road & Ruritan Circle — 2015 Future Background

Movement	EBL	EBT	EBR	WBL	WBT	WBR	NBL	NBT	NBR	SBL	SBT	SBR
Lane Configurations												
Ideal Flow (vphpl)	1900	1900	1900	1900	1900	1900	1900	1900	1900	1900	1900	1900
Total Lost time (s)		3.0		3.0	3.0			3.0	3.0		3.0	
Lane Util. Factor		0.95		1.00	0.95			1.00	1.00		1.00	
Frt		0.99		1.00	1.00			1.00	0.85		0.94	
Flt Protected		1.00		0.95	1.00			0.95	1.00		0.98	
Satd. Flow (prot)		3501		1770	3539			1775	1583		1724	
Flt Permitted		0.92		0.06	1.00			0.95	1.00		0.98	
Satd. Flow (perm)		3235		117	3539			1775	1583		1724	
Volume (vph)	25	1694	125	165	1064	0	180	2	262	7	3	7
Peak-hour factor, PHF	0.95	0.95	0.95	0.95	0.95	0.95	0.95	0.95	0.95	0.95	0.95	0.95
Adj. Flow (vph)	26	1783	132	174	1120	0	189	2	276	7	3	7
RTOR Reduction (vph)	0	3	0	0	0	0	0	0	0	0	7	0
Lane Group Flow (vph)	0	1938	0	174	1120	0	0	191	276	0	10	0
Turn Type	Perm			pm+pt			Split		pm+ov	Split		
Protected Phases		6		5	2		4	4	5	8	8	
Permitted Phases	6			2					4			
Actuated Green, G (s)		57.7		68.8	68.8			15.7	21.3		2.7	
Effective Green, g (s)		60.7		71.8	71.8			18.7	26.8		5.7	
Actuated g/C Ratio		0.58		0.68	0.68			0.18	0.25		0.05	
Clearance Time (s)		6.0		5.5	6.0			6.0	5.5		6.0	
Vehicle Extension (s)		4.0		2.0	4.0			3.0	2.0		3.0	
Lane Grp Cap (vph)		1867		207	2415			316	403		93	
v/s Ratio Prot				c0.06	0.32			0.11	c0.05		c0.01	
v/s Ratio Perm		c0.60		0.51					0.12			
v/c Ratio		1.04		0.84	0.46			0.60	0.68		0.11	
Uniform Delay, d1		22.2		31.7	7.8			39.8	35.4		47.3	
Progression Factor		1.00		1.00	1.00			1.00	1.00		1.00	
Incremental Delay, d2		31.4		24.4	0.2			3.2	3.8		0.5	
Delay (s)		53.6		56.0	8.0			43.1	39.2		47.9	
Level of Service		D		E	A			D	D		D	
Approach Delay (s)		53.6			14.4			40.8			47.9	
Approach LOS		D			B			D			D	

Intersection Summary

HCM Average Control Delay	38.3	HCM Level of Service	D
HCM Volume to Capacity ratio	0.89		
Actuated Cycle Length (s)	105.2	Sum of lost time (s)	12.0
Intersection Capacity Utilization	107.7%	ICU Level of Service	G
Analysis Period (min)	15		

c Critical Lane Group

HCM Signalized Intersection Capacity Analysis — Kincora
23: Church Road & Potomac View Road — 2015 Future Background

Movement	EBL	EBT	WBT	WBR	SBL	SBR
Lane Configurations						
Ideal Flow (vphpl)	1900	1900	1900	1900	1900	1900
Total Lost time (s)	3.0	3.0	3.0	3.0	3.0	3.0
Lane Util. Factor	0.97	0.95	0.91	0.91	0.97	1.00
Frt	1.00	1.00	0.98	0.85	1.00	0.85
Flt Protected	0.95	1.00	1.00	1.00	0.95	1.00
Satd. Flow (prot)	3433	3539	3338	1441	3433	1583
Flt Permitted	0.95	1.00	1.00	1.00	0.95	1.00
Satd. Flow (perm)	3433	3539	3338	1441	3433	1583
Volume (vph)	1132	598	553	782	649	747
Peak-hour factor, PHF	0.95	0.95	0.95	0.95	0.95	0.95
Adj. Flow (vph)	1192	629	582	823	683	786
RTOR Reduction (vph)	0	0	5	6	0	475
Lane Group Flow (vph)	1192	629	643	751	683	311
Turn Type	Prot			pm+ov		Perm
Protected Phases	5	2	6	4	4	
Permitted Phases				8		4
Actuated Green, G (s)	48.1	81.9	26.8	69.6	42.8	42.8
Effective Green, g (s)	52.1	85.9	30.8	78.1	47.3	47.3
Actuated g/C Ratio	0.37	0.62	0.22	0.56	0.34	0.34
Clearance Time (s)	7.0	7.0	7.0	7.5	7.5	7.5
Vehicle Extension (s)	2.0	3.0	3.0	3.0	3.0	3.0
Lane Grp Cap (vph)	1285	2184	739	840	1167	538
v/s Ratio Prot	c0.35	0.18	0.19	c0.30	0.20	
v/s Ratio Perm				0.22		0.20
v/c Ratio	0.93	0.29	0.87	0.89	0.59	0.58
Uniform Delay, d1	41.7	12.4	52.3	26.9	37.9	37.8
Progression Factor	1.00	1.00	1.00	1.00	1.00	1.00
Incremental Delay, d2	11.4	0.1	10.7	11.9	0.8	1.5
Delay (s)	53.1	12.5	62.9	38.8	38.6	39.3
Level of Service	D	B	E	D	D	D
Approach Delay (s)		39.1	49.9		39.0	
Approach LOS		D	D		D	

Intersection Summary

HCM Average Control Delay	42.3	HCM Level of Service	D
HCM Volume to Capacity ratio	0.91		
Actuated Cycle Length (s)	139.2	Sum of lost time (s)	6.0
Intersection Capacity Utilization	84.4%	ICU Level of Service	E
Analysis Period (min)	15		

c Critical Lane Group

Movement	EBL	EBT	EBR	WBL	WBT	WBR	NBL	NBT	NBR	SBL	SBT	SBR
Lane Configurations												
Ideal Flow (vphpl)	1900	1900	1900	1900	1900	1900	1900	1900	1900	1900	1900	1900
Total Lost time (s)	3.0	3.0	3.0	3.0	3.0	3.0	3.0	3.0	3.0	3.0	3.0	
Lane Util. Factor	1.00	0.91	1.00	1.00	0.91	1.00	1.00	0.95	1.00	1.00	0.95	
Frt	1.00	1.00	0.85	1.00	1.00	0.85	1.00	1.00	0.85	1.00	0.90	
Flt Protected	0.95	1.00	1.00	0.95	1.00	1.00	0.95	1.00	1.00	0.95	1.00	
Satd. Flow (prot)	1770	5085	1583	1770	5085	1583	1770	3539	1583	1770	3170	
Flt Permitted	0.95	1.00	1.00	0.95	1.00	1.00	0.54	1.00	1.00	0.57	1.00	
Satd. Flow (perm)	1770	5085	1583	1770	5085	1583	1004	3539	1583	1058	3170	
Volume (vph)	27	1443	92	417	2493	159	145	33	421	290	65	147
Peak-hour factor, PHF	0.95	0.95	0.95	0.95	0.95	0.95	0.95	0.95	0.95	0.95	0.95	0.95
Adj. Flow (vph)	28	1519	97	439	2624	167	153	35	443	305	68	155
RTOR Reduction (vph)	0	0	47	0	0	36	0	0	0	0	107	0
Lane Group Flow (vph)	28	1519	50	439	2624	131	153	35	443	305	116	0
Turn Type	Prot		pm+ov	Prot		pm+ov	pm+pt		Free	pm+pt		
Protected Phases	1	6	3	5	2	7	3	8		7	4	
Permitted Phases			6			2	8		Free	4		
Actuated Green, G (s)	4.2	52.1	64.4	37.3	85.2	102.0	19.1	6.8	140.0	28.1	11.3	
Effective Green, g (s)	8.2	55.6	71.9	41.3	88.7	109.5	26.6	10.3	140.0	34.1	14.8	
Actuated g/C Ratio	0.06	0.40	0.51	0.29	0.63	0.78	0.19	0.07	1.00	0.24	0.11	
Clearance Time (s)	7.0	6.5	7.0	7.0	6.5	7.0	7.0	6.5		7.0	6.5	
Vehicle Extension (s)	2.0	3.0	2.0	2.0	3.0	2.0	2.0	2.0		2.0	2.0	
Lane Grp Cap (vph)	104	2019	847	522	3222	1272	280	260	1583	363	335	
v/s Ratio Prot	0.02	0.30	0.01	c0.25	c0.52	0.02	0.06	0.01		c0.12	0.04	
v/s Ratio Perm			0.02			0.07	0.04		0.28	c0.08		
v/c Ratio	0.27	0.75	0.06	0.84	0.81	0.10	0.55	0.13	0.28	0.84	0.35	
Uniform Delay, d1	63.0	36.3	17.1	46.3	19.4	3.6	50.3	60.7	0.0	48.6	58.1	
Progression Factor	1.00	1.00	1.00	1.00	1.00	1.00	1.00	1.00	1.00	1.00	1.00	
Incremental Delay, d2	0.5	2.6	0.0	11.2	2.4	0.0	1.2	0.1	0.4	15.3	2.8	
Delay (s)	63.5	38.9	17.1	57.5	21.8	3.6	51.5	60.8	0.4	63.9	60.9	
Level of Service	E	D	B	E	C	A	D	E	A	E	E	
Approach Delay (s)		38.1			25.7			16.2			62.6	
Approach LOS		D			C			B			E	

Intersection Summary			
HCM Average Control Delay	31.3	HCM Level of Service	C
HCM Volume to Capacity ratio	0.82		
Actuated Cycle Length (s)	140.0	Sum of lost time (s)	6.0
Intersection Capacity Utilization	89.2%	ICU Level of Service	E
Analysis Period (min)	15		

c Critical Lane Group

Movement	EBL	EBT	EBR	WBL	WBT	WBR	NBL	NBT	NBR	SBL	SBT	SBR
Lane Configurations												
Ideal Flow (vphpl)	1900	1900	1900	1900	1900	1900	1900	1900	1900	1900	1900	1900
Total Lost time (s)	3.0	3.0	3.0	3.0	3.0	3.0	3.0	3.0	3.0	3.0	3.0	3.0
Lane Util. Factor	0.97	0.86	1.00	0.97	0.86	1.00	0.97	0.95	1.00	0.97	0.95	1.00
Frt	1.00	1.00	0.85	1.00	1.00	0.85	1.00	1.00	0.85	1.00	1.00	0.85
Flt Protected	0.95	1.00	1.00	0.95	1.00	1.00	0.95	1.00	1.00	0.95	1.00	1.00
Satd. Flow (prot)	3433	6408	1583	3433	6408	1583	3433	3539	1583	3433	3539	1583
Flt Permitted	0.95	1.00	1.00	0.95	1.00	1.00	0.95	1.00	1.00	0.95	1.00	1.00
Satd. Flow (perm)	3433	6408	1583	3433	6408	1583	3433	3539	1583	3433	3539	1583
Volume (vph)	169	2518	243	88	4153	337	400	40	685	304	22	272
Peak-hour factor, PHF	0.95	0.95	0.95	0.95	0.95	0.95	0.95	0.95	0.95	0.95	0.95	0.95
Adj. Flow (vph)	178	2651	256	93	4372	355	421	42	721	320	23	286
RTOR Reduction (vph)	0	0	85	0	0	0	0	0	0	0	0	0
Lane Group Flow (vph)	178	2651	171	93	4372	355	421	42	721	320	23	286
Turn Type	Prot		Perm	Prot		Free	Prot		Free	Prot		Free
Protected Phases	1	6		5	2		7	4		3	8	
Permitted Phases			6			Free			Free			Free
Actuated Green, G (s)	5.9	92.6	92.6	5.3	92.0	145.0	15.5	6.9	145.0	12.2	3.6	145.0
Effective Green, g (s)	9.9	96.6	96.6	9.3	96.0	145.0	19.5	10.9	145.0	16.2	7.6	145.0
Actuated g/C Ratio	0.07	0.67	0.67	0.06	0.66	1.00	0.13	0.08	1.00	0.11	0.05	1.00
Clearance Time (s)	7.0	7.0	7.0	7.0	7.0		7.0	7.0		7.0	7.0	
Vehicle Extension (s)	2.0	3.0	3.0	2.0	3.0		3.0	3.0		3.0	3.0	
Lane Grp Cap (vph)	234	4269	1055	220	4243	1583	462	266	1583	384	185	1583
v/s Ratio Prot	c0.05	0.41		0.03	c0.68		c0.12	0.01		0.09	0.01	
v/s Ratio Perm			0.11			0.22			c0.46			0.18
v/c Ratio	0.76	0.62	0.16	0.42	1.03	0.22	0.91	0.16	0.46	0.83	0.12	0.18
Uniform Delay, d1	66.4	13.8	9.1	65.3	24.5	0.0	61.9	62.8	0.0	63.1	65.5	0.0
Progression Factor	1.00	1.00	1.00	1.00	1.00	1.00	1.00	1.00	1.00	1.00	1.00	1.00
Incremental Delay, d2	12.3	0.7	0.3	0.5	22.4	0.3	22.1	0.3	0.9	14.3	0.3	0.3
Delay (s)	78.7	14.5	9.4	65.7	46.9	0.3	84.0	63.0	0.9	77.4	65.8	0.3
Level of Service	E	B	A	E	D	A	F	E	A	E	E	A
Approach Delay (s)		17.7			43.9			32.7			41.9	
Approach LOS		B			D			C			D	

Intersection Summary			
HCM Average Control Delay	34.1	HCM Level of Service	C
HCM Volume to Capacity ratio	0.95		
Actuated Cycle Length (s)	145.0	Sum of lost time (s)	9.0
Intersection Capacity Utilization	93.1%	ICU Level of Service	F
Analysis Period (min)	15		

c Critical Lane Group

Movement	EBL	EBR	NBL	NBT	SBT	SBR
Lane Configurations						
Ideal Flow (vphpl)	1900	1900	1900	1900	1900	1900
Total Lost time (s)	3.0	3.0	3.0	3.0	3.0	3.0
Lane Util. Factor	1.00	1.00	1.00	0.95	0.95	1.00
Frt	1.00	0.85	1.00	1.00	1.00	0.85
Flt Protected	0.95	1.00	0.95	1.00	1.00	1.00
Satd. Flow (prot)	1770	1583	1770	3539	3539	1583
Flt Permitted	0.95	1.00	0.09	1.00	1.00	1.00
Satd. Flow (perm)	1770	1583	162	3539	3539	1583
Volume (vph)	211	183	249	1577	1196	116
Peak-hour factor, PHF	0.95	0.95	0.95	0.95	0.95	0.95
Adj. Flow (vph)	222	193	262	1660	1259	122
RTOR Reduction (vph)	0	149	0	0	0	37
Lane Group Flow (vph)	222	44	262	1660	1259	85
Turn Type		Perm	pm+pt			pm+ov
Protected Phases	4		1	6	2	4
Permitted Phases		4	6			2
Actuated Green, G (s)	16.9	16.9	60.9	60.9	39.5	56.4
Effective Green, g (s)	20.9	20.9	64.4	64.4	43.0	63.9
Actuated g/C Ratio	0.23	0.23	0.71	0.71	0.47	0.70
Clearance Time (s)	7.0	7.0	7.0	6.5	6.5	7.0
Vehicle Extension (s)	3.0	3.0	4.0	4.0	4.0	3.0
Lane Grp Cap (vph)	405	362	438	2496	1667	1160
v/s Ratio Prot	c0.13		0.12	c0.47	c0.36	0.02
v/s Ratio Perm		0.03	0.30			0.04
v/c Ratio	0.55	0.12	0.60	0.67	0.76	0.07
Uniform Delay, d1	31.0	27.9	19.8	7.5	19.8	4.3
Progression Factor	1.00	1.00	1.00	1.00	1.00	1.00
Incremental Delay, d2	1.5	0.2	2.6	0.7	2.1	0.0
Delay (s)	32.6	28.1	22.4	8.2	22.0	4.4
Level of Service	C	C	C	A	C	A
Approach Delay (s)	30.5			10.1	20.4	
Approach LOS	C			B	C	

Intersection Summary			
HCM Average Control Delay	16.2	HCM Level of Service	B
HCM Volume to Capacity ratio	0.69		
Actuated Cycle Length (s)	91.3	Sum of lost time (s)	9.0
Intersection Capacity Utilization	68.5%	ICU Level of Service	C
Analysis Period (min)	15		

c Critical Lane Group

Movement	EBL	EBT	EBR	WBL	WBT	WBR	NBL	NBT	NBR	SBL	SBT	SBR
Lane Configurations												
Ideal Flow (vphpl)	1900	1900	1900	1900	1900	1900	1900	1900	1900	1900	1900	1900
Total Lost time (s)	3.0	3.0	3.0	3.0	3.0	3.0	3.0	3.0	3.0	3.0	3.0	3.0
Lane Util. Factor	1.00	0.91	1.00	1.00	0.91	1.00	1.00	0.95	1.00	0.97	0.95	1.00
Frt	1.00	1.00	0.85	1.00	1.00	0.85	1.00	1.00	0.85	1.00	1.00	0.85
Flt Protected	0.95	1.00	1.00	0.95	1.00	1.00	0.95	1.00	1.00	0.95	1.00	1.00
Satd. Flow (prot)	1770	5085	1583	1770	5085	1583	1770	3539	1583	3433	3539	1583
Flt Permitted	0.95	1.00	1.00	0.95	1.00	1.00	0.95	1.00	1.00	0.95	1.00	1.00
Satd. Flow (perm)	1770	5085	1583	1770	5085	1583	1770	3539	1583	3433	3539	1583
Volume (vph)	245	676	194	216	1699	1205	127	549	106	762	394	231
Peak-hour factor, PHF	0.95	0.95	0.95	0.95	0.95	0.95	0.95	0.95	0.95	0.95	0.95	0.95
Adj. Flow (vph)	258	712	204	227	1788	1268	134	578	112	802	415	243
RTOR Reduction (vph)	0	0	0	0	0	0	0	0	14	0	0	52
Lane Group Flow (vph)	258	712	204	227	1788	1268	134	578	98	802	415	191
Turn Type	Prot		Free	Prot		Free	Prot		pm+ov	Prot		pm+ov
Protected Phases	1	6		5	2		3	8	5	7	4	1
Permitted Phases			Free			Free			8			4
Actuated Green, G (s)	15.6	36.6	130.0	19.5	40.5	130.0	12.5	23.4	42.9	23.0	33.9	49.5
Effective Green, g (s)	19.6	40.6	130.0	23.5	44.5	130.0	16.5	26.9	50.4	27.0	37.4	57.0
Actuated g/C Ratio	0.15	0.31	1.00	0.18	0.34	1.00	0.13	0.21	0.39	0.21	0.29	0.44
Clearance Time (s)	7.0	7.0		7.0	7.0		7.0	6.5	7.0	7.0	6.5	7.0
Vehicle Extension (s)	2.0	3.0		2.0	3.0		2.0	2.0	2.0	2.0	2.0	2.0
Lane Grp Cap (vph)	267	1588	1583	320	1741	1583	225	732	650	713	1018	731
v/s Ratio Prot	c0.15	0.14		0.13	c0.35		0.08	0.16	0.03	c0.23	0.12	0.04
v/s Ratio Perm			0.13			c0.80			0.03			0.08
v/c Ratio	0.97	0.45	0.13	0.71	1.03	0.80	0.60	0.79	0.15	1.12	0.41	0.26
Uniform Delay, d1	54.9	35.7	0.0	50.0	42.8	0.0	53.6	48.9	25.9	51.5	37.4	23.2
Progression Factor	1.00	1.00	1.00	1.00	1.00	1.00	1.00	1.00	1.00	1.00	1.00	1.00
Incremental Delay, d2	45.1	0.9	0.2	5.8	28.8	4.4	2.8	5.2	0.0	73.5	0.1	0.1
Delay (s)	100.0	36.7	0.2	55.8	71.5	4.4	56.4	54.1	25.9	125.0	37.5	23.2
Level of Service	F	D	A	E	E	A	E	D	C	F	D	C
Approach Delay (s)		44.2			44.5			50.7			83.2	
Approach LOS		D			D			D			F	

Intersection Summary			
HCM Average Control Delay	53.6	HCM Level of Service	D
HCM Volume to Capacity ratio	0.97		
Actuated Cycle Length (s)	130.0	Sum of lost time (s)	6.0
Intersection Capacity Utilization	96.6%	ICU Level of Service	F
Analysis Period (min)	15		

c Critical Lane Group

Movement	EBL	EBT	EBR	WBL	WBT	WBR	NBL	NBT	NBR	SBL	SBT	SBR
Lane Configurations												
Ideal Flow (vphpl)	1900	1900	1900	1900	1900	1900	1900	1900	1900	1900	1900	1900
Total Lost time (s)	4.0	4.0	4.0	3.0	4.0	3.0	4.0	3.0	3.0	3.0	3.0	4.0
Lane Util. Factor	0.97	0.95	1.00	0.97	0.95	1.00	0.97	0.95	1.00	0.97	0.95	1.00
Frt	1.00	1.00	0.85	1.00	1.00	0.85	1.00	1.00	0.85	1.00	1.00	0.85
Flt Protected	0.95	1.00	1.00	0.95	1.00	1.00	0.95	1.00	1.00	0.95	1.00	1.00
Satd. Flow (prot)	3433	3539	1583	3433	3539	1583	3433	3539	1583	3433	3539	1583
Flt Permitted	0.95	1.00	1.00	0.95	1.00	1.00	0.95	1.00	1.00	0.95	1.00	1.00
Satd. Flow (perm)	3433	3539	1583	3433	3539	1583	3433	3539	1583	3433	3539	1583
Volume (vph)	431	545	433	223	592	90	1129	346	287	68	206	486
Peak-hour factor, PHF	0.95	0.95	0.95	0.95	0.95	0.95	0.95	0.95	0.95	0.95	0.95	0.95
Adj. Flow (vph)	454	574	456	235	623	95	1188	364	302	72	217	512
RTOR Reduction (vph)	0	0	0	0	0	0	0	0	56	0	0	0
Lane Group Flow (vph)	454	574	456	235	623	95	1188	364	246	72	217	512
Turn Type	Prot		Free	Prot		Free	Prot		pm+ov	Prot		Free
Protected Phases	1	6		5	2		7	4	5	3	8	
Permitted Phases			Free			Free			4			Free
Actuated Green, G (s)	12.5	21.0	100.0	8.1	16.6	100.0	36.0	39.4	47.5	4.0	7.4	100.0
Effective Green, g (s)	15.5	24.0	100.0	12.1	19.6	100.0	39.0	42.9	55.0	8.0	10.9	100.0
Actuated g/C Ratio	0.16	0.24	1.00	0.12	0.20	1.00	0.39	0.43	0.55	0.08	0.11	1.00
Clearance Time (s)	7.0	7.0		7.0	7.0		7.0	6.5	7.0	7.0	6.5	
Vehicle Extension (s)	2.5	4.0		2.5	4.0		2.5	2.5	2.5	2.5	2.5	
Lane Grp Cap (vph)	532	849	1583	415	694	1583	1339	1518	918	275	386	1583
v/s Ratio Prot	c0.13	0.16		0.07	c0.18		c0.35	0.10	0.03	0.02	c0.06	
v/s Ratio Perm			0.29			0.06			0.12			0.32
v/c Ratio	0.85	0.68	0.29	0.57	0.90	0.06	0.89	0.24	0.27	0.26	0.56	0.32
Uniform Delay, d1	41.1	34.5	0.0	41.5	39.2	0.0	28.4	18.2	11.9	43.2	42.3	0.0
Progression Factor	1.00	1.00	1.00	1.00	1.00	1.00	1.00	1.00	1.00	1.00	1.00	1.00
Incremental Delay, d2	12.4	4.3	0.5	1.4	16.7	0.1	7.4	0.1	0.1	0.4	1.5	0.5
Delay (s)	53.6	38.8	0.5	42.9	55.9	0.1	35.9	18.2	12.0	43.6	43.8	0.5
Level of Service	D	D	A	D	E	A	D	B	B	D	D	A
Approach Delay (s)		31.5			47.1			28.5			16.1	
Approach LOS		C			D			C			B	

Intersection Summary			
HCM Average Control Delay	30.9	HCM Level of Service	C
HCM Volume to Capacity ratio	0.84		
Actuated Cycle Length (s)	100.0	Sum of lost time (s)	15.0
Intersection Capacity Utilization	79.9%	ICU Level of Service	D
Analysis Period (min)	15		

c Critical Lane Group

Movement	EBL	EBT	EBR	WBL	WBT	WBR	NBL	NBT	NBR	SBL	SBT	SBR
Lane Configurations												
Ideal Flow (vphpl)	1900	1900	1900	1900	1900	1900	1900	1900	1900	1900	1900	1900
Total Lost time (s)	3.0	3.0	3.0	3.0	3.0	3.0	3.0	3.0	3.0	3.0	3.0	3.0
Lane Util. Factor	0.97	1.00	1.00	1.00	0.95	1.00	0.97	0.95	1.00	1.00	0.95	1.00
Frt	1.00	1.00	0.85	1.00	1.00	0.85	1.00	1.00	0.85	1.00	1.00	0.85
Flt Protected	0.95	1.00	1.00	0.95	1.00	1.00	0.95	1.00	1.00	0.95	1.00	1.00
Satd. Flow (prot)	3433	1863	1583	1770	3539	1583	3433	3539	1583	1770	3539	1583
Flt Permitted	0.95	1.00	1.00	0.95	1.00	1.00	0.95	1.00	1.00	0.95	1.00	1.00
Satd. Flow (perm)	3433	1863	1583	1770	3539	1583	3433	3539	1583	1770	3539	1583
Volume (vph)	329	385	260	238	179	33	244	1273	298	4	909	258
Peak-hour factor, PHF	0.95	0.95	0.95	0.95	0.95	0.95	0.95	0.95	0.95	0.95	0.95	0.95
Adj. Flow (vph)	346	405	274	251	188	35	257	1340	314	4	957	272
RTOR Reduction (vph)	0	0	164	0	0	26	0	0	108	0	0	167
Lane Group Flow (vph)	346	405	110	251	188	9	257	1340	206	4	957	105
Turn Type	Prot		Perm	Prot		Perm	Prot		Perm	Prot		Perm
Protected Phases	7	4		3	8		1	6		5	2	
Permitted Phases			4			8			6			2
Actuated Green, G (s)	18.0	26.3	26.3	20.6	28.9	28.9	12.4	59.0	59.0	1.9	48.5	48.5
Effective Green, g (s)	22.0	31.3	31.3	24.6	33.9	33.9	16.4	63.5	63.5	5.9	53.0	53.0
Actuated g/C Ratio	0.16	0.23	0.23	0.18	0.25	0.25	0.12	0.46	0.46	0.04	0.39	0.39
Clearance Time (s)	7.0	8.0	8.0	7.0	8.0	8.0	7.0	7.5	7.5	7.0	7.5	7.5
Vehicle Extension (s)	3.0	3.0	3.0	3.0	3.0	3.0	3.0	3.0	3.0	3.0	3.0	3.0
Lane Grp Cap (vph)	550	425	361	317	874	391	410	1637	732	76	1366	611
v/s Ratio Prot	0.10	c0.22		c0.14	c0.05		c0.07	c0.38		0.00	0.27	
v/s Ratio Perm			0.07			0.01			0.13			0.07
v/c Ratio	0.63	0.95	0.31	0.79	0.22	0.02	0.63	0.82	0.28	0.05	0.70	0.17
Uniform Delay, d1	53.8	52.3	44.0	53.9	41.1	39.1	57.5	31.9	22.8	63.0	35.5	27.7
Progression Factor	1.00	1.00	1.00	1.00	1.00	1.00	1.00	1.00	1.00	1.00	1.00	1.00
Incremental Delay, d2	2.3	31.6	0.5	12.7	0.1	0.0	3.0	3.3	0.2	0.3	1.6	0.1
Delay (s)	56.1	83.9	44.5	66.6	41.2	39.2	60.5	35.2	23.0	63.3	37.1	27.9
Level of Service	E	F	D	E	D	D	E	D	C	E	D	C
Approach Delay (s)		64.0			54.5			36.6			35.2	
Approach LOS		E			D			D			D	

Intersection Summary			
HCM Average Control Delay	44.1	HCM Level of Service	D
HCM Volume to Capacity ratio	0.85		
Actuated Cycle Length (s)	137.3	Sum of lost time (s)	15.0
Intersection Capacity Utilization	90.3%	ICU Level of Service	E
Analysis Period (min)	15		

c Critical Lane Group

HCM Signalized Intersection Capacity Analysis
10: Gloucester Parkway & Ashburn Village Blvd.

Kincora
2015 Future Background

Movement	EBL	EBT	EBR	WBL	WBT	WBR	NBL	NBT	NBR	SBL	SBT	SBR
Lane Configurations												
Ideal Flow (vphpl)	1900	1900	1900	1900	1900	1900	1900	1900	1900	1900	1900	1900
Total Lost time (s)	3.0	3.0	3.0	3.0	3.0	3.0	3.0	3.0	3.0	3.0	3.0	3.0
Lane Util. Factor	1.00	0.95	1.00	0.97	0.95	1.00	0.97	0.95	1.00	0.97	0.95	1.00
Frt	1.00	1.00	0.85	1.00	1.00	0.85	1.00	1.00	0.85	1.00	1.00	0.85
Flt Protected	0.95	1.00	1.00	0.95	1.00	1.00	0.95	1.00	1.00	0.95	1.00	1.00
Satd. Flow (prot)	1770	3539	1583	3433	3539	1583	3433	3539	1583	3433	3539	1583
Flt Permitted	0.95	1.00	1.00	0.95	1.00	1.00	0.95	1.00	1.00	0.95	1.00	1.00
Satd. Flow (perm)	1770	3539	1583	3433	3539	1583	3433	3539	1583	3433	3539	1583
Volume (vph)	199	133	220	191	240	306	334	902	146	164	876	360
Peak-hour factor, PHF	0.95	0.95	0.95	0.95	0.95	0.95	0.95	0.95	0.95	0.95	0.95	0.95
Adj. Flow (vph)	209	140	232	201	253	322	352	949	154	173	922	379
RTOR Reduction (vph)	0	0	0	0	0	0	0	0	0	0	0	0
Lane Group Flow (vph)	209	140	232	201	253	322	352	949	154	173	922	379
Turn Type	Prot		Free	Prot		Free	Prot		Free	Prot		Free
Protected Phases	7	4		3	8		5	2		1	6	
Permitted Phases			Free			Free			Free			Free
Actuated Green, G (s)	17.3	21.4	121.7	12.5	16.6	121.7	16.6	48.1	121.7	11.7	43.2	121.7
Effective Green, g (s)	21.3	25.4	121.7	16.5	20.6	121.7	20.6	52.1	121.7	15.7	47.2	121.7
Actuated g/C Ratio	0.18	0.21	1.00	0.14	0.17	1.00	0.17	0.43	1.00	0.13	0.39	1.00
Clearance Time (s)	7.0	7.0		7.0	7.0		7.0	7.0		7.0	7.0	
Vehicle Extension (s)	3.0	3.0		3.0	3.0		3.0	5.0		3.0	5.0	
Lane Grp Cap (vph)	310	739	1583	465	599	1583	581	1515	1583	443	1373	1583
v/s Ratio Prot	c0.12	0.04		0.06	c0.07		c0.10	0.27		0.05	c0.26	
v/s Ratio Perm			0.15			0.20			0.10			0.24
v/c Ratio	0.67	0.19	0.15	0.43	0.42	0.20	0.61	0.63	0.10	0.39	0.67	0.24
Uniform Delay, d1	47.0	39.7	0.0	48.3	45.2	0.0	46.8	27.2	0.0	48.6	30.8	0.0
Progression Factor	1.00	1.00	1.00	1.00	1.00	1.00	1.00	1.00	1.00	1.00	1.00	1.00
Incremental Delay, d2	5.7	0.1	0.2	0.6	0.5	0.3	1.8	1.2	0.1	0.6	1.7	0.4
Delay (s)	52.6	39.8	0.2	48.9	45.7	0.3	48.6	28.4	0.1	49.2	32.5	0.4
Level of Service	D	D	A	D	D	A	D	C	A	D	C	A
Approach Delay (s)		28.6			27.7			30.3			26.2	
Approach LOS		C			C			C			C	

Intersection Summary			
HCM Average Control Delay	28.2	HCM Level of Service	C
HCM Volume to Capacity ratio	0.61		
Actuated Cycle Length (s)	121.7	Sum of lost time (s)	12.0
Intersection Capacity Utilization	70.6%	ICU Level of Service	C
Analysis Period (min)	15		
c Critical Lane Group			

HCM Signalized Intersection Capacity Analysis
11: Smith Switch Road & Loudoun County Parkway

Kincora
2015 Future Background

Movement	EBL	EBR	NBL	NBT	SBT	SBR
Lane Configurations						
Ideal Flow (vphpl)	1900	1900	1900	1900	1900	1900
Total Lost time (s)	4.0			4.0	4.0	
Lane Util. Factor	1.00			1.00	1.00	
Frt	0.97			1.00	0.99	
Flt Protected	0.96			1.00	1.00	
Satd. Flow (prot)	1741			1860	1850	
Flt Permitted	0.96			0.83	1.00	
Satd. Flow (perm)	1741			1540	1850	
Volume (vph)	204	54	57	1849	1864	101
Peak-hour factor, PHF	0.95	0.95	0.95	0.95	0.95	0.95
Adj. Flow (vph)	215	57	60	1946	1962	106
RTOR Reduction (vph)	7	0	0	0	2	0
Lane Group Flow (vph)	265	0	0	2006	2066	0
Turn Type			Perm			
Protected Phases	4			2	6	
Permitted Phases			2			
Actuated Green, G (s)	14.0			102.0	102.0	
Effective Green, g (s)	17.0			105.0	105.0	
Actuated g/C Ratio	0.13			0.81	0.81	
Clearance Time (s)	7.0			7.0	7.0	
Vehicle Extension (s)	2.0			3.0	3.0	
Lane Grp Cap (vph)	228			1244	1494	
v/s Ratio Prot	c0.15				1.12	
v/s Ratio Perm				c1.30		
v/c Ratio	1.16			1.61	1.38	
Uniform Delay, d1	56.5			12.5	12.5	
Progression Factor	1.00			1.00	1.00	
Incremental Delay, d2	110.5			279.4	176.7	
Delay (s)	167.0			291.9	189.2	
Level of Service	F			F	F	
Approach Delay (s)	167.0			291.9	189.2	
Approach LOS	F			F	F	

Intersection Summary			
HCM Average Control Delay	235.2	HCM Level of Service	F
HCM Volume to Capacity ratio	1.55		
Actuated Cycle Length (s)	130.0	Sum of lost time (s)	8.0
Intersection Capacity Utilization	164.6%	ICU Level of Service	H
Analysis Period (min)	15		
c Critical Lane Group			

Movement	WBL	WBR	NBT	NBR	SBL	SBT
Lane Configurations						
Ideal Flow (vphpl)	1900	1900	1900	1900	1900	1900
Total Lost time (s)	3.0	3.0	3.0		3.0	3.0
Lane Util. Factor	1.00	1.00	0.95		1.00	0.95
Frt	1.00	0.85	0.98		1.00	1.00
Flt Protected	0.95	1.00	1.00		0.95	1.00
Satd. Flow (prot)	1770	1583	3455		1770	3539
Flt Permitted	0.95	1.00	1.00		0.23	1.00
Satd. Flow (perm)	1770	1583	3455		423	3539
Volume (vph)	112	262	616	117	250	548
Peak-hour factor, PHF	0.95	0.95	0.95	0.95	0.95	0.95
Adj. Flow (vph)	118	276	648	123	263	577
RTOR Reduction (vph)	0	111	14	0	0	0
Lane Group Flow (vph)	118	165	757	0	263	577
Turn Type		pm+ov			pm+pt	
Protected Phases	4	1	2		1	6
Permitted Phases		4			6	
Actuated Green, G (s)	6.9	15.5	18.2		33.8	33.8
Effective Green, g (s)	10.9	23.5	22.7		38.3	38.3
Actuated g/C Ratio	0.20	0.43	0.41		0.69	0.69
Clearance Time (s)	7.0	7.0	7.5		7.0	7.5
Vehicle Extension (s)	2.0	2.0	2.0		2.0	2.0
Lane Grp Cap (vph)	350	760	1421		601	2456
v/s Ratio Prot	c0.07	0.05	c0.22		c0.10	0.16
v/s Ratio Perm		0.05			0.20	
v/c Ratio	0.34	0.22	0.53		0.44	0.23
Uniform Delay, d1	19.0	10.0	12.3		4.4	3.1
Progression Factor	1.00	1.00	1.00		1.00	1.00
Incremental Delay, d2	0.2	0.1	0.2		0.2	0.0
Delay (s)	19.3	10.1	12.4		4.6	3.1
Level of Service	B	B	B		A	A
Approach Delay (s)	12.8		12.4			3.6
Approach LOS	B		B			A

Intersection Summary				
HCM Average Control Delay	8.8	HCM Level of Service	A
HCM Volume to Capacity ratio	0.46		
Actuated Cycle Length (s)	55.2	Sum of lost time (s)	9.0
Intersection Capacity Utilization	50.8%	ICU Level of Service	A
Analysis Period (min)	15		

c Critical Lane Group

Movement	EBL	EBT	EBR	WBL	WBT	WBR	NBL	NBT	NBR	SBL	SBT	SBR
Lane Configurations												
Ideal Flow (vphpl)	1900	1900	1900	1900	1900	1900	1900	1900	1900	1900	1900	1900
Total Lost time (s)		4.0	4.0		4.0	4.0	4.0	4.0	4.0	4.0	4.0	4.0
Lane Util. Factor		1.00	1.00		1.00	1.00	1.00	0.95	1.00	1.00	0.95	1.00
Frt		1.00	0.85		1.00	0.85	1.00	1.00	0.85	1.00	1.00	0.85
Flt Protected		0.96	1.00		0.95	1.00	0.95	1.00	1.00	0.95	1.00	1.00
Satd. Flow (prot)		1779	1583		1770	1583	1770	3539	1583	1770	3539	1583
Flt Permitted		0.71	1.00		0.74	1.00	0.40	1.00	1.00	0.35	1.00	1.00
Satd. Flow (perm)		1323	1583		1370	1583	744	3539	1583	646	3539	1583
Volume (vph)	29	2	82	37	0	30	148	754	83	29	553	72
Peak-hour factor, PHF	0.95	0.95	0.95	0.95	0.95	0.95	0.95	0.95	0.95	0.95	0.95	0.95
Adj. Flow (vph)	31	2	86	39	0	32	156	794	87	31	582	76
RTOR Reduction (vph)	0	0	70	0	0	27	0	0	25	0	0	24
Lane Group Flow (vph)	0	33	16	0	39	5	156	794	62	31	582	52
Turn Type	Perm		pm+ov	Perm		pm+ov	pm+pt		Perm	pm+pt		Perm
Protected Phases		4	5		8	1	5	2		1	6	
Permitted Phases	4		4	8		8	2		2	6		6
Actuated Green, G (s)		4.9	10.9		4.9	7.9	67.1	61.1	61.1	61.1	58.1	58.1
Effective Green, g (s)		7.9	16.9		7.9	13.9	73.1	64.1	64.1	67.1	61.1	61.1
Actuated g/C Ratio		0.09	0.19		0.09	0.15	0.81	0.71	0.71	0.75	0.68	0.68
Clearance Time (s)		7.0	7.0		7.0	7.0	7.0	7.0	7.0	7.0	7.0	7.0
Vehicle Extension (s)		2.0	2.0		2.0	2.0	2.0	2.0	2.0	2.0	2.0	2.0
Lane Grp Cap (vph)		116	368		120	315	707	2521	1127	557	2403	1075
v/s Ratio Prot			0.00			0.00	c0.02	c0.22		0.00	0.16	
v/s Ratio Perm		0.02	0.01		c0.03	0.00	0.16		0.04	0.04		0.03
v/c Ratio		0.28	0.04		0.33	0.02	0.22	0.31	0.05	0.06	0.24	0.05
Uniform Delay, d1		38.4	29.9		38.5	32.3	1.9	4.8	3.9	3.0	5.6	4.8
Progression Factor		1.00	1.00		1.00	1.00	1.00	1.00	1.00	1.00	1.00	1.00
Incremental Delay, d2		0.5	0.0		0.6	0.0	0.1	0.3	0.1	0.0	0.2	0.1
Delay (s)		38.9	30.0		39.1	32.3	2.0	5.1	4.0	3.0	5.8	4.9
Level of Service		D	C		D	C	A	A	A	A	A	A
Approach Delay (s)		32.4			36.0			4.6			5.6	
Approach LOS		C			D			A			A	

Intersection Summary				
HCM Average Control Delay	7.8	HCM Level of Service	A
HCM Volume to Capacity ratio	0.32		
Actuated Cycle Length (s)	90.0	Sum of lost time (s)	12.0
Intersection Capacity Utilization	42.9%	ICU Level of Service	A
Analysis Period (min)	15		

c Critical Lane Group

HCM Signalized Intersection Capacity Analysis
5: Route 7 & Countryside Blvd.

Kincora
2015 Future Background

Movement	EBL	EBT	EBR	WBL	WBT	WBR	NBL	NBT	NBR	SBL	SBT	SBR
Lane Configurations												
Ideal Flow (vphpl)	1900	1900	1900	1900	1900	1900	1900	1900	1900	1900	1900	1900
Total Lost time (s)	3.0	3.0	3.0	3.0	3.0	3.0	3.0	3.0	3.0	3.0	3.0	3.0
Lane Util. Factor	0.97	0.86	1.00	0.97	0.86	1.00	0.97	0.95	1.00	0.97	0.95	1.00
Frt	1.00	1.00	0.85	1.00	1.00	0.85	1.00	1.00	0.85	1.00	1.00	0.85
Flt Protected	0.95	1.00	1.00	0.95	1.00	1.00	0.95	1.00	1.00	0.95	1.00	1.00
Satd. Flow (prot)	3433	6408	1583	3433	6408	1583	3433	3539	1583	3433	3539	1583
Flt Permitted	0.95	1.00	1.00	0.95	1.00	1.00	0.95	1.00	1.00	0.95	1.00	1.00
Satd. Flow (perm)	3433	6408	1583	3433	6408	1583	3433	3539	1583	3433	3539	1583
Volume (vph)	451	2395	168	648	2509	214	257	148	398	186	163	286
Peak-hour factor, PHF	0.95	0.95	0.95	0.95	0.95	0.95	0.95	0.95	0.95	0.95	0.95	0.95
Adj. Flow (vph)	475	2521	177	682	2641	225	271	156	419	196	172	301
RTOR Reduction (vph)	0	0	0	0	0	51	0	0	0	0	0	2
Lane Group Flow (vph)	475	2521	177	682	2641	174	271	156	419	196	172	299
Turn Type	Prot		Free	Prot		pm+ov	Prot		Free	Prot		pm+ov
Protected Phases	1	6		5	2	3	7	4		3	8	1
Permitted Phases			Free			2			Free			8
Actuated Green, G (s)	24.6	64.7	150.0	34.2	74.3	86.2	10.0	11.2	150.0	11.9	13.1	37.7
Effective Green, g (s)	28.6	68.7	150.0	38.2	78.3	94.2	14.0	15.2	150.0	15.9	17.1	45.7
Actuated g/C Ratio	0.19	0.46	1.00	0.25	0.52	0.63	0.09	0.10	1.00	0.11	0.11	0.30
Clearance Time (s)	7.0	7.0		7.0	7.0	7.0	7.0	7.0		7.0	7.0	7.0
Vehicle Extension (s)	2.0	2.0		3.0	2.0	2.0	2.0	2.0		2.0	2.0	2.0
Lane Grp Cap (vph)	655	2935	1583	874	3345	1026	320	359	1583	364	403	514
v/s Ratio Prot	0.14	c0.39		c0.20	0.41	0.02	c0.08	0.04		0.06	0.05	c0.11
v/s Ratio Perm			0.11			0.09			c0.26			0.08
v/c Ratio	0.73	0.86	0.11	0.78	0.79	0.17	0.85	0.43	0.26	0.54	0.43	0.58
Uniform Delay, d1	57.0	36.3	0.0	52.0	29.2	11.6	66.9	63.4	0.0	63.6	61.9	44.1
Progression Factor	1.00	1.00	1.00	1.00	1.00	1.00	1.00	1.00	1.00	1.00	1.00	1.00
Incremental Delay, d2	3.4	3.5	0.1	4.6	2.0	0.0	17.6	0.3	0.4	0.8	0.3	1.1
Delay (s)	60.4	39.9	0.1	56.6	31.1	11.6	84.6	63.7	0.4	64.3	62.2	45.2
Level of Service	E	D	A	E	C	B	F	E	A	E	E	D
Approach Delay (s)		40.7			34.8			39.0			55.1	
Approach LOS		D			C			D			E	

Intersection Summary			
HCM Average Control Delay	39.2	HCM Level of Service	D
HCM Volume to Capacity ratio	0.79		
Actuated Cycle Length (s)	150.0	Sum of lost time (s)	9.0
Intersection Capacity Utilization	78.9%	ICU Level of Service	D
Analysis Period (min)	15		

c Critical Lane Group

HCM Signalized Intersection Capacity Analysis
6: Route 7 & Palisade Parkway

Kincora
2015 Future Background

Movement	EBL	EBT	EBR	WBL	WBT	WBR	NBL	NBT	NBR	SBL	SBT	SBR
Lane Configurations												
Ideal Flow (vphpl)	1900	1900	1900	1900	1900	1900	1900	1900	1900	1900	1900	1900
Total Lost time (s)	3.0	3.0	3.0	3.0	3.0	3.0	3.0	3.0	3.0	3.0	3.0	3.0
Lane Util. Factor	0.97	0.86	1.00	1.00	0.86	1.00	0.97	1.00	1.00	0.97	1.00	1.00
Frt	1.00	1.00	0.85	1.00	1.00	0.85	1.00	1.00	0.85	1.00	1.00	0.85
Flt Protected	0.95	1.00	1.00	0.95	1.00	1.00	0.95	1.00	1.00	0.95	1.00	1.00
Satd. Flow (prot)	3433	6408	1583	1770	6408	1583	3433	1863	1583	3433	1863	1583
Flt Permitted	0.95	1.00	1.00	0.95	1.00	1.00	0.95	1.00	1.00	0.95	1.00	1.00
Satd. Flow (perm)	3433	6408	1583	1770	6408	1583	3433	1863	1583	3433	1863	1583
Volume (vph)	263	2562	25	74	2709	161	391	97	234	225	77	234
Peak-hour factor, PHF	0.95	0.95	0.95	0.95	0.95	0.95	0.95	0.95	0.95	0.95	0.95	0.95
Adj. Flow (vph)	277	2697	26	78	2852	169	412	102	246	237	81	246
RTOR Reduction (vph)	0	0	0	0	0	0	0	0	92	0	0	0
Lane Group Flow (vph)	277	2697	26	78	2852	169	412	102	154	237	81	246
Turn Type	Prot		Free	Prot		Free	Split		pm+ov	Split		pm+ov
Protected Phases	1	6		5	2		4	4	5	3	3	1
Permitted Phases			Free			Free			4			3
Actuated Green, G (s)	7.0	47.9	120.0	8.1	49.0	120.0	22.9	22.9	31.0	13.1	13.1	20.1
Effective Green, g (s)	11.0	51.9	120.0	12.1	53.0	120.0	26.9	26.9	39.0	17.1	17.1	28.1
Actuated g/C Ratio	0.09	0.43	1.00	0.10	0.44	1.00	0.22	0.22	0.32	0.14	0.14	0.23
Clearance Time (s)	7.0	7.0		7.0	7.0		7.0	7.0	7.0	7.0	7.0	7.0
Vehicle Extension (s)	2.0	4.0		2.0	4.0		3.0	3.0	2.0	3.0	3.0	2.0
Lane Grp Cap (vph)	315	2771	1583	178	2830	1583	770	418	554	489	265	371
v/s Ratio Prot	c0.08	0.42		0.04	c0.45		c0.12	0.05	0.03	0.07	0.04	c0.06
v/s Ratio Perm			0.02			c0.11			0.07			0.09
v/c Ratio	0.88	0.97	0.02	0.44	1.01	0.11	0.54	0.24	0.28	0.48	0.31	0.66
Uniform Delay, d1	53.8	33.4	0.0	50.8	33.5	0.0	41.0	38.2	30.0	47.4	46.1	41.7
Progression Factor	1.00	1.00	1.00	1.00	1.00	1.00	1.00	1.00	1.00	1.00	1.00	1.00
Incremental Delay, d2	22.5	11.9	0.0	0.6	18.8	0.1	0.7	0.3	0.1	0.8	0.7	3.4
Delay (s)	76.4	45.3	0.0	51.4	52.3	0.1	41.8	38.5	30.1	48.2	46.8	45.1
Level of Service	E	D	A	D	D	A	D	D	C	D	D	D
Approach Delay (s)		47.7			49.5			37.6			46.6	
Approach LOS		D			D			D			D	

Intersection Summary			
HCM Average Control Delay	47.3	HCM Level of Service	D
HCM Volume to Capacity ratio	0.80		
Actuated Cycle Length (s)	120.0	Sum of lost time (s)	9.0
Intersection Capacity Utilization	74.9%	ICU Level of Service	D
Analysis Period (min)	15		

c Critical Lane Group

Movement	EBL	EBT	EBR	WBL	WBT	WBR	NBL	NBT	NBR	SBL	SBT	SBR
Lane Configurations												
Ideal Flow (vphpl)	1900	1900	1900	1900	1900	1900	1900	1900	1900	1900	1900	1900
Total Lost time (s)		4.0	4.0	4.0		4.0	4.0	4.0	4.0	4.0	4.0	4.0
Lane Util. Factor		1.00	1.00	1.00		1.00	1.00	0.95	1.00	1.00	0.95	1.00
Frt		1.00	0.85	1.00		0.85	1.00	1.00	0.85	1.00	1.00	0.85
Flt Protected		0.95	1.00	0.95		1.00	0.95	1.00	1.00	0.95	1.00	1.00
Satd. Flow (prot)		1770	1583	1770		1583	1770	3539	1583	1770	3539	1583
Flt Permitted		0.76	1.00	0.41		1.00	0.95	1.00	1.00	0.95	1.00	1.00
Satd. Flow (perm)		1410	1583	764		1583	1770	3539	1583	1770	3539	1583
Volume (vph)	196	0	167	9	0	26	312	1378	63	190	1141	263
Peak-hour factor, PHF	0.95	0.95	0.95	0.95	0.95	0.95	0.95	0.95	0.95	0.95	0.95	0.95
Adj. Flow (vph)	206	0	176	9	0	27	328	1451	66	200	1201	277
RTOR Reduction (vph)	0	0	141	0	0	22	0	0	21	0	0	134
Lane Group Flow (vph)	0	206	35	9	0	5	328	1451	45	200	1201	143
Turn Type	Perm		Perm	Perm		Perm	Prot		Perm	Prot		Perm
Protected Phases		4			8		5	2		1	6	
Permitted Phases	4		4	8		8			2			6
Actuated Green, G (s)		19.0	19.0	19.0		19.0	24.7	55.4	55.4	16.8	47.5	47.5
Effective Green, g (s)		22.0	22.0	22.0		22.0	27.7	58.4	58.4	19.8	50.5	50.5
Actuated g/C Ratio		0.20	0.20	0.20		0.20	0.25	0.52	0.52	0.18	0.45	0.45
Clearance Time (s)		7.0	7.0	7.0		7.0	7.0	7.0	7.0	7.0	7.0	7.0
Vehicle Extension (s)		3.0	3.0	3.0		3.0	2.0	3.0	3.0	2.0	3.0	3.0
Lane Grp Cap (vph)		276	310	150		310	437	1842	824	312	1593	712
v/s Ratio Prot							c0.19	c0.41		0.11	0.34	
v/s Ratio Perm		c0.15	0.02	0.01		0.00			0.03			0.09
v/c Ratio		0.75	0.11	0.06		0.02	0.75	0.79	0.05	0.64	0.75	0.20
Uniform Delay, d1		42.5	37.1	36.7		36.4	39.1	21.9	13.3	42.9	25.7	18.6
Progression Factor		1.00	1.00	1.00		1.00	1.00	1.00	1.00	1.00	1.00	1.00
Incremental Delay, d2		10.5	0.2	0.2		0.0	6.3	2.3	0.0	3.4	2.1	0.1
Delay (s)		52.9	37.2	36.9		36.4	45.4	24.2	13.3	46.3	27.8	18.8
Level of Service		D	D	D		D	D	C	B	D	C	B
Approach Delay (s)		45.7			36.5			27.6			28.5	
Approach LOS		D			D			C			C	

Intersection Summary				
HCM Average Control Delay	29.8	HCM Level of Service	C	
HCM Volume to Capacity ratio	0.76			
Actuated Cycle Length (s)	112.2	Sum of lost time (s)	8.0	
Intersection Capacity Utilization	76.4%	ICU Level of Service	D	
Analysis Period (min)	15			

c Critical Lane Group

Movement	EBL	EBT	WBT	WBR	SWL	SWR
Lane Configurations						
Sign Control		Free	Free		Stop	
Grade		0%	0%		0%	
Volume (veh/h)	0	64	234	0	0	127
Peak Hour Factor	0.92	0.92	0.92	0.92	0.92	0.92
Hourly flow rate (vph)	0	70	254	0	0	138
Pedestrians						
Lane Width (ft)						
Walking Speed (ft/s)						
Percent Blockage						
Right turn flare (veh)						
Median type					None	
Median storage veh)						
Upstream signal (ft)						
pX, platoon unblocked						
vC, conflicting volume	254				289	127
vC1, stage 1 conf vol						
vC2, stage 2 conf vol						
vCu, unblocked vol	254				289	127
tC, single (s)	4.1				6.8	6.9
tC, 2 stage (s)						
tF (s)	2.2				3.5	3.3
p0 queue free %	100				100	85
cM capacity (veh/h)	1308				678	899

Direction, Lane #	EB 1	EB 2	WB 1	WB 2	SW 1	SW 2
Volume Total	35	35	127	127	69	69
Volume Left	0	0	0	0	0	0
Volume Right	0	0	0	0	69	69
cSH	1700	1700	1700	1700	899	899
Volume to Capacity	0.02	0.02	0.07	0.07	0.08	0.08
Queue Length 95th (ft)	0	0	0	0	6	6
Control Delay (s)	0.0	0.0	0.0	0.0	9.3	9.3
Lane LOS					A	A
Approach Delay (s)	0.0		0.0		9.3	
Approach LOS					A	

Intersection Summary				
Average Delay	2.8			
Intersection Capacity Utilization	17.6%	ICU Level of Service	A	
Analysis Period (min)	15			

Movement	EBL	EBT	EBR	WBL	WBT	WBR	NBL	NBT	NBR	SBL	SBT	SBR
Lane Configurations												
Ideal Flow (vphpl)	1900	1900	1900	1900	1900	1900	1900	1900	1900	1900	1900	1900
Total Lost time (s)		3.0		3.0	3.0			3.0	3.0		3.0	
Lane Util. Factor		0.95		1.00	0.95			1.00	1.00		1.00	
Frt		0.98		1.00	1.00			1.00	0.85		0.91	
Flt Protected		1.00		0.95	1.00			0.95	1.00		0.99	
Satd. Flow (prot)		3454		1770	3536			1776	1583		1676	
Flt Permitted		0.91		0.10	1.00			0.95	1.00		0.99	
Satd. Flow (perm)		3136		177	3536			1776	1583		1676	
Volume (vph)	24	1001	188	218	1210	7	118	3	144	4	3	14
Peak-hour factor, PHF	0.95	0.95	0.95	0.95	0.95	0.95	0.95	0.95	0.95	0.95	0.95	0.95
Adj. Flow (vph)	25	1054	198	229	1274	7	124	3	152	4	3	15
RTOR Reduction (vph)	0	13	0	0	0	0	0	0	0	0	14	0
Lane Group Flow (vph)	0	1264	0	229	1281	0	0	127	152	0	8	0
Turn Type	Perm			pm+pt			Split		pm+ov	Split		
Protected Phases		6		5	2		4	4	5	8	8	
Permitted Phases	6			2					4			
Actuated Green, G (s)		36.9		51.6	51.6			8.4	17.6		2.4	
Effective Green, g (s)		39.9		54.6	54.6			11.4	23.1		5.4	
Actuated g/C Ratio		0.50		0.68	0.68			0.14	0.29		0.07	
Clearance Time (s)		6.0		5.5	6.0			6.0	5.5		6.0	
Vehicle Extension (s)		4.0		2.0	4.0			3.0	2.0		3.0	
Lane Grp Cap (vph)		1556		352	2401			252	455		113	
v/s Ratio Prot				c0.09	0.36			c0.07	0.05		c0.00	
v/s Ratio Perm		c0.40		0.35					0.05			
v/c Ratio		0.81		0.65	0.53			0.50	0.33		0.07	
Uniform Delay, d1		17.1		16.0	6.5			31.9	22.6		35.1	
Progression Factor		1.00		1.00	1.00			1.00	1.00		1.00	
Incremental Delay, d2		3.5		3.3	0.3			1.6	0.2		0.3	
Delay (s)		20.6		19.3	6.8			33.5	22.7		35.4	
Level of Service		C		B	A			C	C		D	
Approach Delay (s)		20.6			8.7			27.6			35.4	
Approach LOS		C			A			C			D	

Intersection Summary			
HCM Average Control Delay	15.5	HCM Level of Service	B
HCM Volume to Capacity ratio	0.68		
Actuated Cycle Length (s)	80.4	Sum of lost time (s)	12.0
Intersection Capacity Utilization	91.4%	ICU Level of Service	F
Analysis Period (min)	15		

c Critical Lane Group

Movement	EBL	EBT	WBT	WBR	SBL	SBR
Lane Configurations						
Ideal Flow (vphpl)	1900	1900	1900	1900	1900	1900
Total Lost time (s)	3.0	3.0	3.0	3.0	3.0	3.0
Lane Util. Factor	0.97	0.95	0.91	0.91	0.97	1.00
Frt	1.00	1.00	1.00	0.85	1.00	0.85
Flt Protected	0.95	1.00	1.00	1.00	0.95	1.00
Satd. Flow (prot)	3433	3539	3390	1441	3433	1583
Flt Permitted	0.95	1.00	1.00	1.00	0.95	1.00
Satd. Flow (perm)	3433	3539	3390	1441	3433	1583
Volume (vph)	686	450	483	376	298	560
Peak-hour factor, PHF	0.95	0.95	0.95	0.95	0.95	0.95
Adj. Flow (vph)	722	474	508	396	314	589
RTOR Reduction (vph)	0	0	0	25	0	434
Lane Group Flow (vph)	722	474	508	371	314	155
Turn Type	Prot			pm+ov		Perm
Protected Phases	5	2	6	4	4	
Permitted Phases				6		4
Actuated Green, G (s)	20.3	46.4	19.1	34.7	15.6	15.6
Effective Green, g (s)	24.3	50.4	23.1	43.2	20.1	20.1
Actuated g/C Ratio	0.32	0.66	0.30	0.56	0.26	0.26
Clearance Time (s)	7.0	7.0	7.0	7.5	7.5	7.5
Vehicle Extension (s)	2.0	3.0	3.0	3.0	3.0	3.0
Lane Grp Cap (vph)	1090	2332	1024	870	902	416
v/s Ratio Prot	c0.21	0.13	c0.15	c0.11	0.09	
v/s Ratio Perm				0.15		0.10
v/c Ratio	0.66	0.20	0.50	0.43	0.35	0.37
Uniform Delay, d1	22.6	5.1	21.9	9.5	22.9	23.0
Progression Factor	1.00	1.00	1.00	1.00	1.00	1.00
Incremental Delay, d2	1.2	0.0	0.4	0.3	0.2	0.6
Delay (s)	23.7	5.2	22.3	9.9	23.1	23.6
Level of Service	C	A	C	A	C	C
Approach Delay (s)		16.4	16.9		23.4	
Approach LOS		B	B		C	

Intersection Summary			
HCM Average Control Delay	18.6	HCM Level of Service	B
HCM Volume to Capacity ratio	0.53		
Actuated Cycle Length (s)	76.5	Sum of lost time (s)	6.0
Intersection Capacity Utilization	58.7%	ICU Level of Service	B
Analysis Period (min)	15		

c Critical Lane Group

Movement	WBL	WBR	NBT	NBR	SBL	SBT
Lane Configurations						
Ideal Flow (vphpl)	1900	1900	1900	1900	1900	1900
Total Lost time (s)	3.0	3.0	3.0		3.0	3.0
Lane Util. Factor	1.00	1.00	0.95		1.00	0.95
Frt	1.00	0.85	0.97		1.00	1.00
Flt Protected	0.95	1.00	1.00		0.95	1.00
Satd. Flow (prot)	1770	1583	3440		1770	3539
Flt Permitted	0.95	1.00	1.00		0.44	1.00
Satd. Flow (perm)	1770	1583	3440		825	3539
Volume (vph)	89	191	304	70	159	550
Peak-hour factor, PHF	0.95	0.95	0.95	0.95	0.95	0.95
Adj. Flow (vph)	94	201	320	74	167	579
RTOR Reduction (vph)	0	123	17	0	0	0
Lane Group Flow (vph)	94	78	377	0	167	579
Turn Type		pm+ov			pm+pt	
Protected Phases	4	1	2		1	6
Permitted Phases		4			6	
Actuated Green, G (s)	4.9	12.4	18.5		33.0	33.0
Effective Green, g (s)	8.9	20.4	23.0		37.5	37.5
Actuated g/C Ratio	0.17	0.39	0.44		0.72	0.72
Clearance Time (s)	7.0	7.0	7.5		7.0	7.5
Vehicle Extension (s)	2.0	2.0	2.0		2.0	2.0
Lane Grp Cap (vph)	301	707	1510		798	2533
v/s Ratio Prot	c0.05	0.02	0.11		0.05	c0.16
v/s Ratio Perm		0.03			0.10	
v/c Ratio	0.31	0.11	0.25		0.21	0.23
Uniform Delay, d1	19.1	10.2	9.3		2.5	2.5
Progression Factor	1.00	1.00	1.00		1.00	1.00
Incremental Delay, d2	0.2	0.0	0.0		0.0	0.0
Delay (s)	19.3	10.2	9.3		2.6	2.5
Level of Service	B	B	A		A	A
Approach Delay (s)	13.1		9.3			2.6
Approach LOS	B		A			A

Intersection Summary			
HCM Average Control Delay	6.6	HCM Level of Service	A
HCM Volume to Capacity ratio	0.24		
Actuated Cycle Length (s)	52.4	Sum of lost time (s)	6.0
Intersection Capacity Utilization	37.1%	ICU Level of Service	A
Analysis Period (min)	15		

c Critical Lane Group

Movement	EBL	EBT	EBR	WBL	WBT	WBR	NBL	NBT	NBR	SBL	SBT	SBR
Lane Configurations												
Ideal Flow (vphpl)	1900	1900	1900	1900	1900	1800	1900	1900	1900	1900	1900	1900
Total Lost time (s)		4.0	4.0		4.0	4.0	4.0	4.0	4.0	4.0	4.0	4.0
Lane Util. Factor		1.00	1.00		1.00	1.00	1.00	0.95	1.00	1.00	0.95	1.00
Frt		1.00	0.85		1.00	0.85	1.00	1.00	0.85	1.00	1.00	0.85
Flt Protected		0.85	1.00		0.96	1.00	0.95	1.00	1.00	0.95	1.00	1.00
Satd. Flow (prot)		1778	1583		1783	1583	1770	3539	1583	1770	3539	1583
Flt Permitted		0.67	1.00		0.72	1.00	0.34	1.00	1.00	0.58	1.00	1.00
Satd. Flow (perm)		1257	1583		1335	1583	632	3539	1583	1075	3539	1583
Volume (vph)	41	2	145	71	9	38	35	271	15	9	684	39
Peak-hour factor, PHF	0.95	0.95	0.95	0.95	0.95	0.95	0.95	0.95	0.95	0.95	0.95	0.95
Adj. Flow (vph)	43	2	153	75	9	40	37	285	16	9	720	41
RTOR Reduction (vph)	0	0	132	0	0	35	0	0	5	0	0	14
Lane Group Flow (vph)	0	45	21	0	84	5	37	285	11	9	720	27
Turn Type	Perm		Perm	Perm		Perm	pm+pt		Perm	pm+pt		Perm
Protected Phases		4			8		5	2		1	6	
Permitted Phases	4		4	8		8	2		2	6		6
Actuated Green, G (s)		9.3	9.3		9.3	9.3	61.9	58.7	58.7	57.5	56.5	56.5
Effective Green, g (s)		12.3	12.3		12.3	12.3	67.9	61.7	61.7	63.5	59.5	59.5
Actuated g/C Ratio		0.14	0.14		0.14	0.14	0.75	0.69	0.69	0.71	0.66	0.66
Clearance Time (s)		7.0	7.0		7.0	7.0	7.0	7.0	7.0	7.0	7.0	7.0
Vehicle Extension (s)		2.0	2.0		2.0	2.0	2.0	2.0	2.0	2.0	2.0	2.0
Lane Grp Cap (vph)		172	216		182	216	555	2426	1085	789	2340	1047
v/s Ratio Prot							c0.00	0.08		0.00	c0.20	
v/s Ratio Perm		0.04	0.01		c0.06	0.00	0.05		0.01	0.01		0.02
v/c Ratio		0.26	0.10		0.46	0.03	0.07	0.12	0.01	0.01	0.31	0.03
Uniform Delay, d1		34.8	34.0		35.8	33.7	3.0	4.8	4.5	3.9	6.5	5.3
Progression Factor		1.00	1.00		1.00	1.00	1.00	1.00	1.00	1.00	1.00	1.00
Incremental Delay, d2		0.3	0.1		0.7	0.0	0.0	0.1	0.0	0.0	0.3	0.0
Delay (s)		35.1	34.1		36.5	33.7	3.0	4.9	4.5	3.9	6.8	5.3
Level of Service		D	C		D	C	A	A	A	A	A	A
Approach Delay (s)		34.3			35.6			4.7			6.7	
Approach LOS		C			D			A			A	

Intersection Summary			
HCM Average Control Delay	12.6	HCM Level of Service	B
HCM Volume to Capacity ratio	0.33		
Actuated Cycle Length (s)	90.0	Sum of lost time (s)	16.0
Intersection Capacity Utilization	43.3%	ICU Level of Service	A
Analysis Period (min)	15		

c Critical Lane Group

HCM Signalized Intersection Capacity Analysis
10: Gloucester Parkway & Ashburn Village Blvd.

Kincora
2015 Future Background

Movement	EBL	EBT	EBR	WBL	WBT	WBR	NBL	NBT	NBR	SBL	SBT	SBR
Lane Configurations												
Ideal Flow (vphpl)	1900	1900	1900	1900	1900	1900	1900	1900	1900	1900	1900	1900
Total Lost time (s)	3.0	3.0	3.0	3.0	3.0	3.0	3.0	3.0	3.0	3.0	3.0	3.0
Lane Util. Factor	1.00	0.95	1.00	0.97	0.95	1.00	0.97	0.95	1.00	0.97	0.95	1.00
Frt	1.00	1.00	0.85	1.00	1.00	0.85	1.00	1.00	0.85	1.00	1.00	0.85
Flt Protected	0.95	1.00	1.00	0.95	1.00	1.00	0.95	1.00	1.00	0.95	1.00	1.00
Satd. Flow (prot)	1770	3539	1583	3433	3539	1583	3433	3539	1583	3433	3539	1583
Flt Permitted	0.95	1.00	1.00	0.95	1.00	1.00	0.95	1.00	1.00	0.95	1.00	1.00
Satd. Flow (perm)	1770	3539	1583	3433	3539	1583	3433	3539	1583	3433	3539	1583
Volume (vph)	257	383	220	205	150	157	116	654	296	318	470	65
Peak-hour factor, PHF	0.95	0.95	0.95	0.95	0.95	0.95	0.95	0.95	0.95	0.95	0.95	0.95
Adj. Flow (vph)	271	403	232	216	158	165	122	688	312	335	495	68
RTOR Reduction (vph)	0	0	0	0	0	0	0	0	0	0	0	0
Lane Group Flow (vph)	271	403	232	216	158	165	122	688	312	335	495	68
Turn Type	Prot		Free	Prot		Free	Prot		Free	Prot		Free
Protected Phases	7	4		3	8		5	2		1	6	
Permitted Phases			Free			Free			Free			Free
Actuated Green, G (s)	20.3	24.5	111.9	12.4	16.6	111.9	9.6	31.4	111.9	15.6	37.2	111.9
Effective Green, g (s)	24.3	28.5	111.9	16.4	20.6	111.9	13.8	35.4	111.9	19.6	41.2	111.9
Actuated g/C Ratio	0.22	0.25	1.00	0.15	0.18	1.00	0.12	0.32	1.00	0.18	0.37	1.00
Clearance Time (s)	7.0	7.0		7.0	7.0		7.0	7.0		7.0	7.0	
Vehicle Extension (s)	3.0	3.0		3.0	3.0		3.0	5.0		3.0	5.0	
Lane Grp Cap (vph)	384	901	1583	503	652	1583	423	1120	1583	601	1303	1583
v/s Ratio Prot	c0.15	c0.11		0.06	0.04		0.04	c0.19		c0.10	0.14	
v/s Ratio Perm			0.15			0.10			0.20			0.04
v/c Ratio	0.71	0.45	0.15	0.43	0.24	0.10	0.29	0.61	0.20	0.56	0.38	0.04
Uniform Delay, d1	40.5	35.1	0.0	43.5	39.0	0.0	44.6	32.5	0.0	42.2	26.0	0.0
Progression Factor	1.00	1.00	1.00	1.00	1.00	1.00	1.00	1.00	1.00	1.00	1.00	1.00
Incremental Delay, d2	5.8	0.4	0.2	0.6	0.2	0.1	0.4	1.5	0.3	1.1	0.4	0.1
Delay (s)	46.3	35.4	0.2	44.1	39.2	0.1	45.0	33.9	0.3	43.3	26.4	0.1
Level of Service	D	D	A	D	D	A	D	C	A	D	C	A
Approach Delay (s)		29.7			29.2			25.8			30.7	
Approach LOS		C			C			C			C	

Intersection Summary			
HCM Average Control Delay	28.6	HCM Level of Service	C
HCM Volume to Capacity ratio	0.58		
Actuated Cycle Length (s)	111.9	Sum of lost time (s)	9.0
Intersection Capacity Utilization	67.2%	ICU Level of Service	C
Analysis Period (min)	15		

c Critical Lane Group

HCM Signalized Intersection Capacity Analysis
11: Smith Switch Road & Loudoun County Parkway

Kincora
2015 Future Background

Movement	EBL	EBR	NBL	NBT	SBT	SBR
Lane Configurations						
Ideal Flow (vphpl)	1900	1900	1900	1900	1900	1900
Total Lost time (s)	4.0			4.0	4.0	
Lane Util. Factor	0.97			0.95	0.95	
Frt	0.95			1.00	0.98	
Flt Protected	0.97			1.00	1.00	
Satd. Flow (prot)	3318			3534	3482	
Flt Permitted	0.97			0.83	1.00	
Satd. Flow (perm)	3318			2926	3482	
Volume (vph)	117	62	48	1600	1326	160
Peak-hour factor, PHF	0.95	0.95	0.95	0.95	0.95	0.95
Adj. Flow (vph)	123	65	51	1684	1396	168
RTOR Reduction (vph)	54	0	0	0	10	0
Lane Group Flow (vph)	134	0	0	1735	1554	0
Turn Type			Perm			
Protected Phases	4			2	6	
Permitted Phases			2			
Actuated Green, G (s)	11.0			61.4	61.4	
Effective Green, g (s)	14.0			64.4	64.4	
Actuated g/C Ratio	0.16			0.75	0.75	
Clearance Time (s)	7.0			7.0	7.0	
Vehicle Extension (s)	4.0			3.0	3.0	
Lane Grp Cap (vph)	538			2181	2595	
v/s Ratio Prot	c0.04				0.45	
v/s Ratio Perm				c0.59		
v/c Ratio	0.25			0.80	0.60	
Uniform Delay, d1	31.6			6.9	5.1	
Progression Factor	1.00			1.00	1.00	
Incremental Delay, d2	0.3			2.1	0.4	
Delay (s)	31.9			9.0	5.4	
Level of Service	C			A	A	
Approach Delay (s)	31.9			9.0	5.4	
Approach LOS	C			A	A	

Intersection Summary			
HCM Average Control Delay	8.6	HCM Level of Service	A
HCM Volume to Capacity ratio	0.70		
Actuated Cycle Length (s)	86.4	Sum of lost time (s)	8.0
Intersection Capacity Utilization	93.9%	ICU Level of Service	F
Analysis Period (min)	15		

c Critical Lane Group

HCM Signalized Intersection Capacity Analysis
13: Nokes Blvd & Atlantic Blvd

Kincora
2015 Future Background

Movement	EBL	EBT	EBR	WBL	WBT	WBR	NBL	NBT	NBR	SBL	SBT	SBR
Lane Configurations												
Ideal Flow (vphpl)	1900	1900	1900	1900	1900	1900	1900	1900	1900	1900	1900	1900
Total Lost time (s)	4.0	4.0	4.0	3.0	4.0	3.0	4.0	3.0	3.0	3.0	3.0	4.0
Lane Util. Factor	0.97	0.95	1.00	0.97	0.95	1.00	0.97	0.95	1.00	0.97	0.95	1.00
Frt	1.00	1.00	0.85	1.00	1.00	0.85	1.00	1.00	0.85	1.00	1.00	0.85
Flt Protected	0.95	1.00	1.00	0.95	1.00	1.00	0.95	1.00	1.00	0.95	1.00	1.00
Satd. Flow (prot)	3433	3539	1583	3433	3539	1583	3433	3539	1583	3433	3539	1583
Flt Permitted	0.95	1.00	1.00	0.95	1.00	1.00	0.95	1.00	1.00	0.95	1.00	1.00
Satd. Flow (perm)	3433	3539	1583	3433	3539	1583	3433	3539	1583	3433	3539	1583
Volume (vph)	360	302	469	121	399	49	378	86	112	36	178	145
Peak-hour factor, PHF	0.95	0.95	0.95	0.95	0.95	0.95	0.95	0.95	0.95	0.95	0.95	0.95
Adj. Flow (vph)	379	318	494	127	420	52	398	91	118	38	187	153
RTOR Reduction (vph)	0	0	0	0	0	0	0	0	80	0	0	0
Lane Group Flow (vph)	379	318	494	127	420	52	398	91	38	38	187	153
Turn Type	Prot		Free	Prot		Free	Prot		pm+ov	Prot		Free
Protected Phases	1	6		5	2		7	4	5	3	8	
Permitted Phases			Free			Free			4			Free
Actuated Green, G (s)	19.8	68.9	140.0	10.0	59.1	140.0	20.2	28.1	38.1	5.5	13.4	140.0
Effective Green, g (s)	22.8	71.9	140.0	14.0	62.1	140.0	23.2	31.6	45.6	9.5	16.9	140.0
Actuated g/C Ratio	0.16	0.51	1.00	0.10	0.44	1.00	0.17	0.23	0.33	0.07	0.12	1.00
Clearance Time (s)	7.0	7.0		7.0	7.0		7.0	6.5	7.0	7.0	6.5	
Vehicle Extension (s)	2.5	4.0		2.5	4.0		2.5	2.5	2.5	2.5	2.5	
Lane Grp Cap (vph)	559	1818	1583	343	1570	1583	569	799	550	233	427	1583
v/s Ratio Prot	c0.11	0.09		0.04	0.12		c0.12	0.03	0.01	0.01	c0.05	
v/s Ratio Perm			c0.31			0.03			0.02			0.10
v/c Ratio	0.68	0.17	0.31	0.37	0.27	0.03	0.70	0.11	0.07	0.16	0.44	0.10
Uniform Delay, d1	55.1	16.2	0.0	58.9	24.6	0.0	55.1	43.1	32.6	61.5	57.1	0.0
Progression Factor	1.00	1.00	1.00	1.00	1.00	1.00	1.00	1.00	1.00	1.00	1.00	1.00
Incremental Delay, d2	3.0	0.2	0.5	0.5	0.4	0.0	3.5	0.0	0.0	0.2	0.5	0.1
Delay (s)	58.1	16.4	0.5	59.4	25.0	0.0	58.6	43.1	32.6	61.7	57.7	0.1
Level of Service	E	B	A	E	C	A	E	D	C	E	E	A
Approach Delay (s)		23.6			30.1			51.2			34.8	
Approach LOS		C			C			D			C	

Intersection Summary			
HCM Average Control Delay	32.6	HCM Level of Service	C
HCM Volume to Capacity ratio	0.46		
Actuated Cycle Length (s)	140.0	Sum of lost time (s)	11.0
Intersection Capacity Utilization	51.8%	ICU Level of Service	A
Analysis Period (min)	15		
c Critical Lane Group			

HCM Signalized Intersection Capacity Analysis
14: Nokes Blvd. & Cascades Parkway

Kincora
2015 Future Background

Movement	EBL	EBT	EBR	WBL	WBT	WBR	NBL	NBT	NBR	SBL	SBT	SBR
Lane Configurations												
Ideal Flow (vphpl)	1900	1900	1900	1900	1900	1900	1900	1900	1900	1900	1900	1900
Total Lost time (s)	3.0	3.0	3.0	3.0	3.0	3.0	3.0	3.0	3.0	3.0	3.0	3.0
Lane Util. Factor	0.97	1.00	1.00	1.00	0.95	1.00	0.97	0.95	1.00	1.00	0.95	1.00
Frt	1.00	1.00	0.85	1.00	1.00	0.85	1.00	1.00	0.85	1.00	1.00	0.85
Flt Protected	0.95	1.00	1.00	0.95	1.00	1.00	0.95	1.00	1.00	0.95	1.00	1.00
Satd. Flow (prot)	3433	1863	1583	1770	3539	1583	3433	3539	1583	1770	3539	1583
Flt Permitted	0.95	1.00	1.00	0.95	1.00	1.00	0.95	1.00	1.00	0.95	1.00	1.00
Satd. Flow (perm)	3433	1863	1583	1770	3539	1583	3433	3539	1583	1770	3539	1583
Volume (vph)	72	70	79	190	334	18	161	636	220	4	693	116
Peak-hour factor, PHF	0.95	0.95	0.95	0.95	0.95	0.95	0.95	0.95	0.95	0.95	0.95	0.95
Adj. Flow (vph)	76	74	83	200	352	19	169	669	232	4	729	122
RTOR Reduction (vph)	0	0	72	0	0	15	0	0	115	0	0	72
Lane Group Flow (vph)	76	74	11	200	352	4	169	669	117	4	729	50
Turn Type	Prot		Perm	Prot		Perm	Prot		Perm	Prot		Perm
Protected Phases	7	4		3	8		1	6		5	2	
Permitted Phases			4			8			6			2
Actuated Green, G (s)	7.6	7.9	7.9	15.8	16.1	16.1	11.0	46.9	46.9	1.7	37.6	37.6
Effective Green, g (s)	11.6	12.9	12.9	19.8	21.1	21.1	15.0	51.4	51.4	5.7	42.1	42.1
Actuated g/C Ratio	0.11	0.13	0.13	0.19	0.21	0.21	0.15	0.50	0.50	0.06	0.41	0.41
Clearance Time (s)	7.0	8.0	8.0	7.0	8.0	8.0	7.0	7.5	7.5	7.0	7.5	7.5
Vehicle Extension (s)	3.0	3.0	3.0	3.0	3.0	3.0	3.0	3.0	3.0	3.0	3.0	3.0
Lane Grp Cap (vph)	391	236	201	344	734	328	506	1787	799	99	1464	655
v/s Ratio Prot	0.02	0.04		c0.11	c0.10		c0.05	0.19		0.00	c0.21	
v/s Ratio Perm			0.01			0.00			0.07			0.03
v/c Ratio	0.19	0.31	0.05	0.58	0.48	0.01	0.33	0.37	0.15	0.04	0.50	0.08
Uniform Delay, d1	40.9	40.4	39.1	37.2	35.5	32.1	38.9	15.4	13.5	45.5	22.0	18.1
Progression Factor	1.00	1.00	1.00	1.00	1.00	1.00	1.00	1.00	1.00	1.00	1.00	1.00
Incremental Delay, d2	0.2	0.8	0.1	2.5	0.5	0.0	0.4	0.1	0.1	0.2	0.3	0.1
Delay (s)	41.1	41.2	39.2	39.7	36.0	32.1	39.3	15.5	13.6	45.6	22.3	18.1
Level of Service	D	D	D	D	D	C	D	B	B	D	C	B
Approach Delay (s)		40.4			37.2			18.9			21.8	
Approach LOS		D			D			B			C	

Intersection Summary			
HCM Average Control Delay	25.5	HCM Level of Service	C
HCM Volume to Capacity ratio	0.48		
Actuated Cycle Length (s)	101.8	Sum of lost time (s)	9.0
Intersection Capacity Utilization	65.5%	ICU Level of Service	C
Analysis Period (min)	15		
c Critical Lane Group			

Movement	EBL	EBR	NBL	NBT	SBT	SBR
Lane Configurations						
Ideal Flow (vphpl)	1900	1900	1900	1900	1900	1900
Total Lost time (s)	3.0	3.0	3.0	3.0	3.0	3.0
Lane Util. Factor	1.00	1.00	1.00	0.95	0.95	1.00
Frt	1.00	0.85	1.00	1.00	1.00	0.85
Flt Protected	0.95	1.00	0.95	1.00	1.00	1.00
Satd. Flow (prot)	1770	1583	1770	3539	3539	1583
Flt Permitted	0.95	1.00	0.23	1.00	1.00	1.00
Satd. Flow (perm)	1770	1583	427	3539	3539	1583
Volume (vph)	97	54	172	1026	782	142
Peak-hour factor, PHF	0.95	0.95	0.95	0.95	0.95	0.95
Adj. Flow (vph)	102	57	181	1080	823	149
RTOR Reduction (vph)	0	46	0	0	0	52
Lane Group Flow (vph)	102	11	181	1080	823	97
Turn Type		Perm	pm+pt			pm+ov
Protected Phases	4		1	6	2	4
Permitted Phases		4	6			2
Actuated Green, G (s)	7.8	7.8	42.3	42.3	26.2	34.0
Effective Green, g (s)	11.8	11.8	45.8	45.8	29.7	41.5
Actuated g/C Ratio	0.19	0.19	0.72	0.72	0.47	0.65
Clearance Time (s)	7.0	7.0	7.0	6.5	6.5	7.0
Vehicle Extension (s)	3.0	3.0	4.0	4.0	4.0	3.0
Lane Grp Cap (vph)	328	294	584	2549	1653	1108
v/s Ratio Prot	c0.06		0.06	c0.31	c0.23	0.02
v/s Ratio Perm		0.01	0.16			0.05
v/c Ratio	0.31	0.04	0.31	0.42	0.50	0.09
Uniform Delay, d1	22.4	21.2	4.0	3.6	11.8	4.1
Progression Factor	1.00	1.00	1.00	1.00	1.00	1.00
Incremental Delay, d2	0.5	0.1	0.4	0.2	0.3	0.0
Delay (s)	22.9	21.3	4.5	3.7	12.1	4.1
Level of Service	C	C	A	A	B	A
Approach Delay (s)	22.3			3.8	10.9	
Approach LOS	C			A	B	

Intersection Summary			
HCM Average Control Delay	7.9	HCM Level of Service	A
HCM Volume to Capacity ratio	0.44		
Actuated Cycle Length (s)	63.6	Sum of lost time (s)	9.0
Intersection Capacity Utilization	46.5%	ICU Level of Service	A
Analysis Period (min)	15		

c Critical Lane Group

Movement	EBL	EBT	EBR	WBL	WBT	WBR	NBL	NBT	NBR	SBL	SBT	SBR
Lane Configurations												
Ideal Flow (vphpl)	1900	1900	1900	1900	1900	1900	1900	1900	1900	1900	1900	1900
Total Lost time (s)	3.0	3.0	3.0	3.0	3.0	3.0	3.0	3.0	3.0	3.0	3.0	3.0
Lane Util. Factor	0.97	0.91	1.00	0.97	0.91	1.00	0.97	0.95	1.00	0.97	0.95	1.00
Frt	1.00	1.00	0.85	1.00	1.00	0.85	1.00	1.00	0.85	1.00	1.00	0.85
Flt Protected	0.95	1.00	1.00	0.95	1.00	1.00	0.95	1.00	1.00	0.95	1.00	1.00
Satd. Flow (prot)	3433	5085	1583	3433	5085	1583	3433	3539	1583	3433	3539	1583
Flt Permitted	0.95	1.00	1.00	0.95	1.00	1.00	0.95	1.00	1.00	0.95	1.00	1.00
Satd. Flow (perm)	3433	5085	1583	3433	5085	1583	3433	3539	1583	3433	3539	1583
Volume (vph)	226	1267	252	482	410	482	62	227	110	789	535	427
Peak-hour factor, PHF	0.95	0.95	0.95	0.95	0.95	0.95	0.95	0.95	0.95	0.95	0.95	0.95
Adj. Flow (vph)	238	1334	265	507	432	507	65	239	116	831	563	449
RTOR Reduction (vph)	0	0	0	0	0	0	0	0	4	0	0	95
Lane Group Flow (vph)	238	1334	265	507	432	507	65	239	112	831	563	354
Turn Type	Prot		Free	Prot		Free	Prot		pm+ov	Prot		pm+ov
Protected Phases	1	6		5	2		3	8	5	7	4	1
Permitted Phases			Free			Free			8			4
Actuated Green, G (s)	14.0	36.8	135.0	26.2	49.0	135.0	4.0	14.5	40.7	30.0	40.5	54.5
Effective Green, g (s)	18.0	40.8	135.0	30.2	53.0	135.0	8.0	18.0	48.2	34.0	44.0	62.0
Actuated g/C Ratio	0.13	0.30	1.00	0.22	0.39	1.00	0.06	0.13	0.36	0.25	0.33	0.46
Clearance Time (s)	7.0	7.0		7.0	7.0		7.0	6.5	7.0	7.0	6.5	7.0
Vehicle Extension (s)	2.0	3.0		2.0	3.0		2.0	2.0	2.0	2.0	2.0	2.0
Lane Grp Cap (vph)	458	1537	1583	768	1996	1583	203	472	600	865	1153	762
v/s Ratio Prot	0.07	c0.26		c0.15	0.08		0.02	0.07	0.04	c0.24	c0.16	0.06
v/s Ratio Perm			0.17			0.32			0.03			0.16
v/c Ratio	0.52	0.87	0.17	0.66	0.22	0.32	0.32	0.51	0.19	0.96	0.49	0.46
Uniform Delay, d1	54.5	44.6	0.0	47.7	27.2	0.0	60.9	54.4	29.9	49.8	36.5	25.1
Progression Factor	1.00	1.00	1.00	1.00	1.00	1.00	1.00	1.00	1.00	1.00	1.00	1.00
Incremental Delay, d2	0.4	6.9	0.2	1.7	0.2	0.5	0.3	0.3	0.1	21.4	0.1	0.2
Delay (s)	54.9	51.4	0.2	49.4	27.5	0.5	61.2	54.7	30.0	71.2	36.6	25.3
Level of Service	D	D	A	D	C	A	E	D	C	E	D	C
Approach Delay (s)		44.5			25.7			48.9			49.4	
Approach LOS		D			C			D			D	

Intersection Summary			
HCM Average Control Delay	41.6	HCM Level of Service	D
HCM Volume to Capacity ratio	0.78		
Actuated Cycle Length (s)	135.0	Sum of lost time (s)	9.0
Intersection Capacity Utilization	80.3%	ICU Level of Service	D
Analysis Period (min)	15		

c Critical Lane Group

HCM Signalized Intersection Capacity Analysis — Kincora
19: Farmwell Road & Smith Switch Road — 2015 Future Background

Movement	EBL	EBT	EBR	WBL	WBT	WBR	NBL	NBT	NBR	SBL	SBT	SBR
Lane Configurations												
Ideal Flow (vphpl)	1900	1900	1900	1900	1900	1900	1900	1900	1900	1900	1900	1900
Total Lost time (s)	3.0	3.0	3.0	3.0	3.0	3.0	3.0	3.0	3.0	3.0	3.0	
Lane Util. Factor	1.00	0.91	1.00	1.00	0.91	1.00	1.00	0.95	1.00	1.00	0.95	
Frt	1.00	1.00	0.85	1.00	1.00	0.85	1.00	1.00	0.85	1.00	0.90	
Flt Protected	0.95	1.00	1.00	0.95	1.00	1.00	0.95	1.00	1.00	0.95	1.00	
Satd. Flow (prot)	1770	5085	1583	1770	5085	1583	1770	3539	1583	1770	3189	
Flt Permitted	0.95	1.00	1.00	0.95	1.00	1.00	0.73	1.00	1.00	0.55	1.00	
Satd. Flow (perm)	1770	5085	1583	1770	5085	1583	1354	3539	1583	1024	3189	
Volume (vph)	125	2035	55	240	836	202	72	63	119	104	14	28
Peak-hour factor, PHF	0.95	0.95	0.95	0.95	0.95	0.95	0.95	0.95	0.95	0.95	0.95	0.95
Adj. Flow (vph)	132	2142	58	253	880	213	76	66	125	109	15	29
RTOR Reduction (vph)	0	0	24	0	0	60	0	0	0	0	25	0
Lane Group Flow (vph)	132	2142	34	253	880	153	76	66	125	109	19	0
Turn Type	Prot		pm+ov	Prot		pm+ov	pm+pt		Free	pm+pt		
Protected Phases	1	6	3	5	2	7	3	8		7	4	
Permitted Phases			6			2	8		Free	4		
Actuated Green, G (s)	13.2	70.6	77.0	23.2	80.1	95.1	13.1	6.7	140.0	26.7	15.3	
Effective Green, g (s)	17.2	74.1	82.5	26.7	83.6	100.6	18.6	10.2	140.0	30.2	18.8	
Actuated g/C Ratio	0.12	0.53	0.59	0.19	0.60	0.72	0.13	0.07	1.00	0.22	0.13	
Clearance Time (s)	7.0	6.5	5.0	6.5	6.5	5.0	5.0	6.5		5.0	6.5	
Vehicle Extension (s)	2.0	3.0	2.0	2.0	3.0	2.0	2.0	2.0		2.0	2.0	
Lane Grp Cap (vph)	217	2691	967	338	3036	1171	205	258	1583	311	428	
v/s Ratio Prot	0.07	c0.42	0.00	c0.14	0.17	0.02	c0.02	0.02		c0.04	0.01	
v/s Ratio Perm			0.02			0.08	0.03		0.08	c0.03		
v/c Ratio	0.61	0.80	0.04	0.75	0.29	0.13	0.37	0.26	0.08	0.35	0.04	
Uniform Delay, d1	58.2	26.8	12.1	53.5	13.7	6.1	55.0	61.3	0.0	45.9	52.8	
Progression Factor	1.00	1.00	1.00	1.00	1.00	1.00	1.00	1.00	1.00	1.00	1.00	
Incremental Delay, d2	3.3	2.5	0.0	7.7	0.2	0.0	0.4	0.2	0.1	0.2	0.2	
Delay (s)	61.5	29.3	12.1	61.2	14.0	6.1	55.4	61.5	0.1	46.2	53.0	
Level of Service	E	C	B	E	B	A	E	E	A	D	D	
Approach Delay (s)		30.7			21.6			31.0			48.1	
Approach LOS		C			C			C			D	

Intersection Summary

HCM Average Control Delay	28.4	HCM Level of Service	C
HCM Volume to Capacity ratio	0.68		
Actuated Cycle Length (s)	140.0	Sum of lost time (s)	9.0
Intersection Capacity Utilization	75.0%	ICU Level of Service	D
Analysis Period (min)	15		

c Critical Lane Group

HCM Signalized Intersection Capacity Analysis — Kincora
21: Waxpool Road & Nokes Blvd — 2015 Future Background

Movement	EBL	EBT	EBR	WBL	WBT	WBR	NBL	NBT	NBR	SBL	SBT	SBR
Lane Configurations												
Ideal Flow (vphpl)	1900	1900	1900	1900	1900	1900	1900	1900	1900	1900	1900	1900
Total Lost time (s)	3.0	3.0	3.0	3.0	3.0	3.0	3.0	3.0	3.0	3.0	3.0	3.0
Lane Util. Factor	0.97	0.86	1.00	0.97	0.86	1.00	0.97	0.95	1.00	0.97	0.95	1.00
Frt	1.00	1.00	0.85	1.00	1.00	0.85	1.00	1.00	0.85	1.00	1.00	0.85
Flt Protected	0.95	1.00	1.00	0.95	1.00	1.00	0.95	1.00	1.00	0.95	1.00	1.00
Satd. Flow (prot)	3433	6408	1583	3433	6408	1583	3433	3539	1583	3433	3539	1583
Flt Permitted	0.95	1.00	1.00	0.95	1.00	1.00	0.95	1.00	1.00	0.95	1.00	1.00
Satd. Flow (perm)	3433	6408	1583	3433	6408	1583	3433	3539	1583	3433	3539	1583
Volume (vph)	208	3396	227	436	2447	286	210	5	94	149	53	62
Peak-hour factor, PHF	0.95	0.95	0.95	0.95	0.95	0.95	0.95	0.95	0.95	0.95	0.95	0.95
Adj. Flow (vph)	219	3575	239	459	2576	301	221	5	99	157	56	65
RTOR Reduction (vph)	0	0	99	0	0	0	0	0	0	0	0	0
Lane Group Flow (vph)	219	3575	140	459	2576	301	221	5	99	157	56	65
Turn Type	Prot		Perm	Prot		Free	Prot		Free	Prot		Free
Protected Phases	1	6		5	2		7	4		3	8	
Permitted Phases			6			Free			Free			Free
Actuated Green, G (s)	10.7	81.1	81.1	18.9	89.3	145.0	8.0	1.4	145.0	15.6	9.0	145.0
Effective Green, g (s)	14.7	85.1	85.1	22.9	93.3	145.0	12.0	5.4	145.0	19.6	13.0	145.0
Actuated g/C Ratio	0.10	0.59	0.59	0.16	0.64	1.00	0.08	0.04	1.00	0.14	0.09	1.00
Clearance Time (s)	7.0	7.0	7.0	7.0	7.0		7.0	7.0		7.0	7.0	
Vehicle Extension (s)	2.0	3.0	3.0	2.0	3.0		3.0	3.0		3.0	3.0	
Lane Grp Cap (vph)	348	3761	929	542	4123	1583	284	132	1583	464	317	1583
v/s Ratio Prot	0.06	c0.56		c0.13	0.40		c0.06	0.00		c0.05	0.02	
v/s Ratio Perm			0.09			c0.19			0.06			0.04
v/c Ratio	0.63	0.95	0.15	0.85	0.62	0.19	0.78	0.04	0.06	0.34	0.18	0.04
Uniform Delay, d1	62.5	28.0	13.6	59.3	15.4	0.0	65.2	67.3	0.0	56.8	61.0	0.0
Progression Factor	1.00	1.00	1.00	1.00	1.00	1.00	1.00	1.00	1.00	1.00	1.00	1.00
Incremental Delay, d2	2.6	7.0	0.3	11.2	0.7	0.3	12.6	0.1	0.1	0.4	0.3	0.0
Delay (s)	65.1	35.0	13.9	70.6	16.1	0.3	77.8	67.4	0.1	57.3	61.3	0.0
Level of Service	E	C	B	E	B	A	E	E	A	E	E	A
Approach Delay (s)		35.4			22.2			54.0			44.7	
Approach LOS		D			C			D			D	

Intersection Summary

HCM Average Control Delay	30.9	HCM Level of Service	C
HCM Volume to Capacity ratio	0.84		
Actuated Cycle Length (s)	145.0	Sum of lost time (s)	9.0
Intersection Capacity Utilization	84.3%	ICU Level of Service	E
Analysis Period (min)	15		

c Critical Lane Group

Movement	EBL	EBT	EBR	WBL	WBT	WBR	NBL	NBT	NBR	SBL	SBT	SBR
Lane Configurations												
Ideal Flow (vphpl)	1900	1900	1900	1900	1900	1900	1900	1900	1900	1900	1900	1900
Total Lost time (s)		3.0			3.0	3.0			3.0	3.0		3.0	
Lane Util. Factor		0.95			1.00	0.95			1.00	1.00		1.00	
Frt		0.98			1.00	1.00			1.00	0.85		0.91	
Flt Protected		1.00			0.95	1.00			0.95	1.00		0.99	
Satd. Flow (prot)		3454			1770	3536			1776	1583		1676	
Flt Permitted		0.91			0.13	1.00			0.72	1.00		0.95	
Satd. Flow (perm)		3137			240	3536			1332	1583		1599	
Volume (vph)	24	1001	188	218	1210	7	118	3	144	4	3	14	
Peak-hour factor, PHF	0.95	0.95	0.95	0.95	0.95	0.95	0.95	0.95	0.95	0.95	0.95	0.95	
Adj. Flow (vph)	25	1054	198	229	1274	7	124	3	152	4	3	15	
RTOR Reduction (vph)	0	10	0	0	0	0	0	0	0	0	13	0	
Lane Group Flow (vph)	0	1267	0	229	1281	0	0	127	152	0	9	0	
Turn Type	Perm			pm+pt			Perm		pm+ov	Perm			
Protected Phases		6		5	2			4	5		8		
Permitted Phases	6			2			4		4	8			
Actuated Green, G (s)		46.4		62.5	62.5			10.6	21.2		10.6		
Effective Green, g (s)		49.4		65.5	65.5			13.6	26.7		13.6		
Actuated g/C Ratio		0.58		0.77	0.77			0.16	0.31		0.16		
Clearance Time (s)		6.0		5.5	6.0			6.0	5.5		6.0		
Vehicle Extension (s)		4.0		2.0	4.0			3.0	2.0		3.0		
Lane Grp Cap (vph)		1821		420	2722			213	552		256		
v/s Ratio Prot				c0.08	0.36				0.04				
v/s Ratio Perm		c0.40		0.34				c0.10	0.05		0.01		
v/c Ratio		0.70		0.55	0.47			0.60	0.28		0.04		
Uniform Delay, d1		12.6		8.7	3.5			33.2	21.9		30.2		
Progression Factor		1.00		1.00	1.00			1.00	1.00		1.00		
Incremental Delay, d2		1.3		0.8	0.2			4.4	0.1		0.1		
Delay (s)		13.8		9.5	3.7			37.6	22.0		30.3		
Level of Service		B		A	A			D	C		C		
Approach Delay (s)		13.8			4.6			29.1			30.3		
Approach LOS		B			A			C			C		

Intersection Summary			
HCM Average Control Delay	10.8	HCM Level of Service	B
HCM Volume to Capacity ratio	0.65		
Actuated Cycle Length (s)	85.1	Sum of lost time (s)	9.0
Intersection Capacity Utilization	91.4%	ICU Level of Service	F
Analysis Period (min)	15		

c Critical Lane Group

Movement	EBL	EBT	WBT	WBR	SBL	SBR
Lane Configurations						
Ideal Flow (vphpl)	1900	1900	1900	1900	1900	1900
Total Lost time (s)	3.0	3.0	3.0	3.0	3.0	3.0
Lane Util. Factor	0.97	0.95	0.91	0.91	0.97	1.00
Frt	1.00	1.00	1.00	0.85	1.00	0.85
Flt Protected	0.95	1.00	1.00	1.00	0.95	1.00
Satd. Flow (prot)	3433	3539	3390	1441	3433	1583
Flt Permitted	0.95	1.00	1.00	1.00	0.95	1.00
Satd. Flow (perm)	3433	3539	3390	1441	3433	1583
Volume (vph)	686	450	483	376	298	560
Peak-hour factor, PHF	0.95	0.95	0.95	0.95	0.95	0.95
Adj. Flow (vph)	722	474	508	396	314	589
RTOR Reduction (vph)	0	0	0	24	0	433
Lane Group Flow (vph)	722	474	508	372	314	156
Turn Type	Prot			pm+ov		Perm
Protected Phases	5	2	6	4	4	
Permitted Phases				6		4
Actuated Green, G (s)	20.0	45.4	18.4	33.9	15.5	15.5
Effective Green, g (s)	24.0	49.4	22.4	42.4	20.0	20.0
Actuated g/C Ratio	0.32	0.66	0.30	0.56	0.27	0.27
Clearance Time (s)	7.0	7.0	7.0	7.5	7.5	7.5
Vehicle Extension (s)	2.0	3.0	3.0	3.0	3.0	3.0
Lane Grp Cap (vph)	1093	2319	1007	868	911	420
v/s Ratio Prot	c0.21	0.13	c0.15	c0.11	0.09	
v/s Ratio Perm				0.14		0.10
v/c Ratio	0.66	0.20	0.50	0.43	0.34	0.37
Uniform Delay, d1	22.2	5.2	21.9	9.5	22.4	22.6
Progression Factor	1.00	1.00	1.00	1.00	1.00	1.00
Incremental Delay, d2	1.2	0.0	0.4	0.3	0.2	0.6
Delay (s)	23.4	5.2	22.3	9.9	22.6	23.1
Level of Service	C	A	C	A	C	C
Approach Delay (s)		16.2	16.9		23.0	
Approach LOS		B	B		C	

Intersection Summary			
HCM Average Control Delay	18.4	HCM Level of Service	B
HCM Volume to Capacity ratio	0.53		
Actuated Cycle Length (s)	75.4	Sum of lost time (s)	6.0
Intersection Capacity Utilization	58.7%	ICU Level of Service	B
Analysis Period (min)	15		

c Critical Lane Group

HCM Signalized Intersection Capacity Analysis — Kincora
24: Russel Branch Parkway & Loudoun County Parkway — 2015 Future Background

Movement	EBL	EBT	EBR	WBL	WBT	WBR	NBL	NBT	NBR	SBL	SBT	SBR
Lane Configurations												
Ideal Flow (vphpl)	1900	1900	1900	1900	1900	1900	1900	1900	1900	1900	1900	1900
Total Lost time (s)	4.0		4.0	4.0		4.0	4.0	4.0	4.0	4.0	4.0	4.0
Lane Util. Factor	0.97		1.00	1.00		1.00	1.00	0.95	1.00	1.00	0.95	1.00
Frt	1.00		0.85	1.00		0.85	1.00	1.00	0.85	1.00	1.00	0.85
Flt Protected	0.95		1.00	0.95		1.00	0.95	1.00	1.00	0.95	1.00	1.00
Satd. Flow (prot)	3433		1583	1770		1583	1770	3539	1583	1770	3539	1583
Flt Permitted	0.95		1.00	0.95		1.00	0.95	1.00	1.00	0.95	1.00	1.00
Satd. Flow (perm)	3433		1583	1770		1583	1770	3539	1583	1770	3539	1583
Volume (vph)	196	0	167	9	0	26	312	1378	63	190	1141	263
Peak-hour factor, PHF	0.95	0.95	0.95	0.95	0.95	0.95	0.95	0.95	0.95	0.95	0.95	0.95
Adj. Flow (vph)	206	0	176	9	0	27	328	1451	66	200	1201	277
RTOR Reduction (vph)	0	0	0	0	0	0	0	0	24	0	0	115
Lane Group Flow (vph)	206	0	176	9	0	27	328	1451	42	200	1201	162
Turn Type	Prot		Free	Prot		Free	Prot		Perm	Prot		Perm
Protected Phases	7	4		3	8		5	2		1	6	
Permitted Phases			Free			Free			2			6
Actuated Green, G (s)	18.8		102.2	2.3		102.2	22.1	49.1	49.1	15.3	42.3	42.3
Effective Green, g (s)	19.8		102.2	3.3		102.2	25.1	52.1	52.1	18.3	45.3	45.3
Actuated g/C Ratio	0.19		1.00	0.03		1.00	0.25	0.51	0.51	0.18	0.44	0.44
Clearance Time (s)	5.0			5.0			7.0	7.0	7.0	7.0	7.0	7.0
Vehicle Extension (s)	2.0			2.0			2.0	3.0	3.0	2.0	3.0	3.0
Lane Grp Cap (vph)	665		1583	57		1583	435	1804	807	317	1569	702
v/s Ratio Prot	c0.06			0.01			c0.19	c0.41		0.11	0.34	
v/s Ratio Perm			0.11			0.02			0.03			0.10
v/c Ratio	0.31		0.11	0.16		0.02	0.75	0.80	0.05	0.63	0.77	0.23
Uniform Delay, d1	35.3		0.0	48.1		0.0	35.7	20.8	12.6	38.8	24.0	17.6
Progression Factor	1.00		1.00	1.00		1.00	1.00	1.00	1.00	1.00	1.00	1.00
Incremental Delay, d2	0.1		0.1	0.5		0.0	6.5	2.7	0.0	3.0	2.3	0.2
Delay (s)	35.4		0.1	48.6		0.0	42.2	23.5	12.6	41.8	26.3	17.8
Level of Service	D		A	D		A	D	C	B	D	C	B
Approach Delay (s)		19.2			12.2			26.4			26.7	
Approach LOS		B			B			C			C	

Intersection Summary				
HCM Average Control Delay	25.7	HCM Level of Service	C	
HCM Volume to Capacity ratio	0.67			
Actuated Cycle Length (s)	102.2	Sum of lost time (s)	8.0	
Intersection Capacity Utilization	71.1%	ICU Level of Service	C	
Analysis Period (min)	15			

c Critical Lane Group

HCM Unsignalized Intersection Capacity Analysis — Kincora
36: Gloucester Pkwy & WB Off-Ramp — 2015 Future Background

Movement	EBL	EBT	WBT	WBR	SWL	SWR
Lane Configurations						
Sign Control		Free	Free		Stop	
Grade		0%	0%		0%	
Volume (veh/h)	0	64	234	0	0	127
Peak Hour Factor	0.92	0.92	0.92	0.92	0.92	0.92
Hourly flow rate (vph)	0	70	254	0	0	138
Pedestrians						
Lane Width (ft)						
Walking Speed (ft/s)						
Percent Blockage						
Right turn flare (veh)						
Median type					None	
Median storage veh)						
Upstream signal (ft)						
pX, platoon unblocked						
vC, conflicting volume	254				289	127
vC1, stage 1 conf vol						
vC2, stage 2 conf vol						
vCu, unblocked vol	254				289	127
tC, single (s)	4.1				6.8	6.9
tC, 2 stage (s)						
tF (s)	2.2				3.5	3.3
p0 queue free %	100				100	85
cM capacity (veh/h)	1308				678	899

Direction, Lane #	EB 1	EB 2	WB 1	WB 2	SW 1	SW 2
Volume Total	35	35	127	127	69	69
Volume Left	0	0	0	0	0	0
Volume Right	0	0	0	0	69	69
cSH	1700	1700	1700	1700	899	899
Volume to Capacity	0.02	0.02	0.07	0.07	0.08	0.08
Queue Length 95th (ft)	0	0	0	0	6	6
Control Delay (s)	0.0	0.0	0.0	0.0	9.3	9.3
Lane LOS					A	A
Approach Delay (s)	0.0		0.0		9.3	
Approach LOS					A	

Intersection Summary			
Average Delay	2.8		
Intersection Capacity Utilization	17.6%	ICU Level of Service	A
Analysis Period (min)	15		

HCM Signalized Intersection Capacity Analysis
5: Route 7 & Countryside Blvd

Kincora
2015 Future Background

Movement	EBL	EBT	EBR	WBL	WBT	WBR	NBL	NBT	NBR	SBL	SBT	SBR
Lane Configurations												
Ideal Flow (vphpl)	1900	1900	1900	1900	1900	1900	1900	1900	1900	1900	1900	1900
Total Lost time (s)	3.0	3.0	3.0	3.0	3.0	3.0	3.0	3.0	3.0	3.0	3.0	3.0
Lane Util. Factor	0.97	0.86	1.00	0.97	0.86	1.00	0.97	0.95	1.00	0.97	0.95	1.00
Frt	1.00	1.00	0.85	1.00	1.00	0.85	1.00	1.00	0.85	1.00	1.00	0.85
Flt Protected	0.95	1.00	1.00	0.95	1.00	1.00	0.95	1.00	1.00	0.95	1.00	1.00
Satd. Flow (prot)	3433	6408	1583	3433	6408	1583	3433	3539	1583	3433	3539	1583
Flt Permitted	0.95	1.00	1.00	0.95	1.00	1.00	0.95	1.00	1.00	0.95	1.00	1.00
Satd. Flow (perm)	3433	6408	1583	3433	6408	1583	3433	3539	1583	3433	3539	1583
Volume (vph)	451	2395	168	648	2509	214	257	148	398	186	163	286
Peak-hour factor, PHF	0.95	0.95	0.95	0.95	0.95	0.95	0.95	0.95	0.95	0.95	0.95	0.95
Adj. Flow (vph)	475	2521	177	682	2641	225	271	156	419	196	172	301
RTOR Reduction (vph)	0	0	0	0	0	48	0	0	0	0	0	2
Lane Group Flow (vph)	475	2521	177	682	2641	177	271	156	419	196	172	299
Turn Type	Prot		Free	Prot		pm+ov	Prot		Free	Prot		pm+ov
Protected Phases	1	6		5	2	3	7	4		3	8	1
Permitted Phases			Free			2			Free			8
Actuated Green, G (s)	24.6	64.2	150.0	34.2	73.8	86.1	10.0	11.3	150.0	12.3	13.6	38.2
Effective Green, g (s)	28.6	68.2	150.0	38.2	77.8	94.1	14.0	15.3	150.0	16.3	17.6	46.2
Actuated g/C Ratio	0.19	0.45	1.00	0.25	0.52	0.63	0.09	0.10	1.00	0.11	0.12	0.31
Clearance Time (s)	7.0	7.0		7.0	7.0	7.0	7.0	7.0		7.0	7.0	7.0
Vehicle Extension (s)	2.0	2.0		3.0	2.0	2.0	2.0	2.0		2.0	2.0	2.0
Lane Grp Cap (vph)	655	2914	1583	874	3324	1025	320	361	1583	373	415	519
v/s Ratio Prot	0.14	c0.39		c0.20	0.41	0.02	c0.08	0.04		0.06	0.05	c0.11
v/s Ratio Perm			0.11			0.09			c0.26			0.08
v/c Ratio	0.73	0.87	0.11	0.78	0.79	0.17	0.85	0.43	0.26	0.53	0.41	0.58
Uniform Delay, d1	57.0	36.8	0.0	52.0	29.6	11.7	66.9	63.3	0.0	63.2	61.4	43.7
Progression Factor	1.00	1.00	1.00	1.00	1.00	1.00	1.00	1.00	1.00	1.00	1.00	1.00
Incremental Delay, d2	3.4	3.7	0.1	4.6	2.0	0.0	17.6	0.3	0.4	0.6	0.2	1.0
Delay (s)	60.4	40.5	0.1	56.6	31.6	11.7	84.6	63.6	0.4	63.8	61.7	44.6
Level of Service	E	D	A	E	C	B	F	E	A	E	E	D
Approach Delay (s)		41.2			35.1			39.0			54.6	
Approach LOS		D			D			D			D	

Intersection Summary			
HCM Average Control Delay	39.5	HCM Level of Service	D
HCM Volume to Capacity ratio	0.79		
Actuated Cycle Length (s)	150.0	Sum of lost time (s)	9.0
Intersection Capacity Utilization	78.9%	ICU Level of Service	D
Analysis Period (min)	15		

c Critical Lane Group

HCM Signalized Intersection Capacity Analysis
6: Route 7 & Palisade Parkway

Kincora
2015 Future Background

Movement	EBL	EBT	EBR	WBL	WBT	WBR	NBL	NBT	NBR	SBL	SBT	SBR
Lane Configurations												
Ideal Flow (vphpl)	1900	1900	1900	1900	1900	1900	1900	1900	1900	1900	1900	1900
Total Lost time (s)	3.0	3.0	3.0	3.0	3.0	3.0	3.0	3.0	3.0	3.0	3.0	3.0
Lane Util. Factor	0.97	0.86	1.00	1.00	0.86	1.00	0.97	1.00	1.00	0.97	1.00	1.00
Frt	1.00	1.00	0.85	1.00	1.00	0.85	1.00	1.00	0.85	1.00	1.00	0.85
Flt Protected	0.95	1.00	1.00	0.95	1.00	1.00	0.95	1.00	1.00	0.95	1.00	1.00
Satd. Flow (prot)	3433	6408	1583	1770	6408	1583	3433	1863	1583	3433	1863	1583
Flt Permitted	0.95	1.00	1.00	0.95	1.00	1.00	0.95	1.00	1.00	0.95	1.00	1.00
Satd. Flow (perm)	3433	6408	1583	1770	6408	1583	3433	1863	1583	3433	1863	1583
Volume (vph)	263	2562	25	74	2709	161	391	97	234	225	77	234
Peak-hour factor, PHF	0.95	0.95	0.95	0.95	0.95	0.95	0.95	0.95	0.95	0.95	0.95	0.95
Adj. Flow (vph)	277	2697	26	78	2852	169	412	102	246	237	81	246
RTOR Reduction (vph)	0	0	0	0	0	0	0	0	8	0	0	5
Lane Group Flow (vph)	277	2697	26	78	2852	169	412	102	238	237	81	241
Turn Type	Prot		Free	Prot		Free	Prot		pm+ov	Prot		pm+ov
Protected Phases	1	6		5	2		7	4	5	3	8	1
Permitted Phases			Free			Free			4			8
Actuated Green, G (s)	11.7	60.2	120.0	9.3	57.8	120.0	17.7	12.5	21.8	10.0	4.8	16.5
Effective Green, g (s)	15.7	64.2	120.0	13.3	61.8	120.0	21.7	16.5	29.8	14.0	8.8	24.5
Actuated g/C Ratio	0.13	0.54	1.00	0.11	0.51	1.00	0.18	0.14	0.25	0.12	0.07	0.20
Clearance Time (s)	7.0	7.0		7.0	7.0		7.0	7.0	7.0	7.0	7.0	7.0
Vehicle Extension (s)	2.0	4.0		2.0	4.0		3.0	3.0	2.0	3.0	3.0	2.0
Lane Grp Cap (vph)	449	3428	1583	196	3300	1583	621	256	433	401	137	363
v/s Ratio Prot	0.08	0.42		0.04	c0.45		c0.12	0.05	c0.06	0.07	0.04	c0.09
v/s Ratio Perm			0.02			c0.11			0.09			0.07
v/c Ratio	0.62	0.79	0.02	0.40	0.86	0.11	0.66	0.40	0.55	0.59	0.59	0.66
Uniform Delay, d1	49.3	22.4	0.0	49.6	25.4	0.0	45.8	47.2	39.3	50.3	53.9	44.0
Progression Factor	1.00	1.00	1.00	1.00	1.00	1.00	1.00	1.00	1.00	1.00	1.00	1.00
Incremental Delay, d2	1.8	1.9	0.0	0.5	3.3	0.1	2.7	1.0	0.8	2.3	6.7	3.5
Delay (s)	51.1	24.3	0.0	50.1	28.7	0.1	48.4	48.2	40.0	52.6	60.5	47.5
Level of Service	D	C	A	D	C	A	D	D	D	D	E	D
Approach Delay (s)		26.6			27.7			45.7			51.5	
Approach LOS		C			C			D			D	

Intersection Summary			
HCM Average Control Delay	30.9	HCM Level of Service	C
HCM Volume to Capacity ratio	0.75		
Actuated Cycle Length (s)	120.0	Sum of lost time (s)	6.0
Intersection Capacity Utilization	74.9%	ICU Level of Service	D
Analysis Period (min)	15		

c Critical Lane Group

Movement	WBL	WBR	NBT	NBR	SBL	SBT
Lane Configurations						
Ideal Flow (vphpl)	1900	1900	1900	1900	1900	1900
Total Lost time (s)	3.0	3.0	3.0		3.0	3.0
Lane Util. Factor	1.00	1.00	0.95		1.00	0.95
Frt	1.00	0.85	0.98		1.00	1.00
Flt Protected	0.95	1.00	1.00		0.95	1.00
Satd. Flow (prot)	1770	1583	3455		1770	3539
Flt Permitted	0.95	1.00	1.00		0.23	1.00
Satd. Flow (perm)	1770	1583	3455		423	3539
Volume (vph)	112	262	616	117	250	548
Peak-hour factor, PHF	0.95	0.95	0.95	0.95	0.95	0.95
Adj. Flow (vph)	118	276	648	123	263	577
RTOR Reduction (vph)	0	111	14	0	0	0
Lane Group Flow (vph)	118	165	757	0	263	577
Turn Type		pm+ov			pm+pt	
Protected Phases	4	1	2		1	6
Permitted Phases		4			6	
Actuated Green, G (s)	6.9	15.5	18.2		33.8	33.8
Effective Green, g (s)	10.9	23.5	22.7		38.3	38.3
Actuated g/C Ratio	0.20	0.43	0.41		0.69	0.69
Clearance Time (s)	7.0	7.0	7.5		7.0	7.5
Vehicle Extension (s)	2.0	2.0	2.0		2.0	2.0
Lane Grp Cap (vph)	350	760	1421		601	2456
v/s Ratio Prot	c0.07	0.05	c0.22		c0.10	0.16
v/s Ratio Perm		0.05			0.20	
v/c Ratio	0.34	0.22	0.53		0.44	0.23
Uniform Delay, d1	19.0	10.0	12.3		4.4	3.1
Progression Factor	1.00	1.00	1.00		1.00	1.00
Incremental Delay, d2	0.2	0.1	0.2		0.2	0.0
Delay (s)	19.3	10.1	12.4		4.6	3.1
Level of Service	B	B	B		A	A
Approach Delay (s)	12.8		12.4			3.6
Approach LOS	B		B			A

Intersection Summary			
HCM Average Control Delay	8.8	HCM Level of Service	A
HCM Volume to Capacity ratio	0.46		
Actuated Cycle Length (s)	55.2	Sum of lost time (s)	9.0
Intersection Capacity Utilization	50.8%	ICU Level of Service	A
Analysis Period (min)	15		

c Critical Lane Group

Movement	EBL	EBT	EBR	WBL	WBT	WBR	NBL	NBT	NBR	SBL	SBT	SBR
Lane Configurations												
Ideal Flow (vphpl)	1900	1900	1900	1900	1900	1900	1900	1900	1900	1900	1900	1900
Total Lost time (s)		4.0	4.0		4.0	4.0	4.0	4.0	4.0	4.0	4.0	4.0
Lane Util. Factor		1.00	1.00		1.00	1.00	1.00	0.95	1.00	1.00	0.95	1.00
Frt		1.00	0.85		1.00	0.85	1.00	1.00	0.85	1.00	1.00	0.85
Flt Protected		0.96	1.00		0.95	1.00	0.95	1.00	1.00	0.95	1.00	1.00
Satd. Flow (prot)		1779	1583		1770	1583	1770	3539	1583	1770	3539	1583
Flt Permitted		0.71	1.00		0.74	1.00	0.40	1.00	1.00	0.35	1.00	1.00
Satd. Flow (perm)		1323	1583		1370	1583	744	3539	1583	646	3539	1583
Volume (vph)	29	2	82	37	0	30	148	754	83	29	553	72
Peak-hour factor, PHF	0.95	0.95	0.95	0.95	0.95	0.95	0.95	0.95	0.95	0.95	0.95	0.95
Adj. Flow (vph)	31	2	86	39	0	32	156	794	87	31	582	76
RTOR Reduction (vph)	0	0	70	0	0	27	0	0	25	0	0	24
Lane Group Flow (vph)	0	33	16	0	39	5	156	794	62	31	582	52
Turn Type	Perm		pm+ov	Perm		pm+ov	pm+pt		Perm	pm+pt		Perm
Protected Phases		4	5		8	1	5	2		1	6	
Permitted Phases	4		4	8		8	2		2	6		6
Actuated Green, G (s)		4.9	10.9		4.9	7.9	67.1	61.1	61.1	61.1	58.1	58.1
Effective Green, g (s)		7.9	16.9		7.9	13.9	73.1	64.1	64.1	67.1	61.1	61.1
Actuated g/C Ratio		0.09	0.19		0.09	0.15	0.81	0.71	0.71	0.75	0.68	0.68
Clearance Time (s)		7.0	7.0		7.0	7.0	7.0	7.0	7.0	7.0	7.0	7.0
Vehicle Extension (s)		2.0	2.0		2.0	2.0	2.0	2.0	2.0	2.0	2.0	2.0
Lane Grp Cap (vph)		116	368		120	315	707	2521	1127	557	2403	1075
v/s Ratio Prot			0.00			0.00	c0.02	c0.22		0.00	0.18	
v/s Ratio Perm		0.02	0.01		c0.03	0.00	0.16		0.04	0.04		0.03
v/c Ratio		0.28	0.04		0.33	0.02	0.22	0.31	0.05	0.06	0.24	0.05
Uniform Delay, d1		38.4	29.9		38.5	32.3	1.9	4.8	3.9	3.0	5.6	4.8
Progression Factor		1.00	1.00		1.00	1.00	1.00	1.00	1.00	1.00	1.00	1.00
Incremental Delay, d2		0.5	0.0		0.6	0.0	0.1	0.3	0.1	0.0	0.2	0.1
Delay (s)		38.9	30.0		39.1	32.3	2.0	5.1	4.0	3.0	5.8	4.9
Level of Service		D	C		D	C	A	A	A	A	A	A
Approach Delay (s)		32.4			36.0			4.6			5.6	
Approach LOS		C			D			A			A	

Intersection Summary			
HCM Average Control Delay	7.8	HCM Level of Service	A
HCM Volume to Capacity ratio	0.32		
Actuated Cycle Length (s)	90.0	Sum of lost time (s)	12.0
Intersection Capacity Utilization	42.9%	ICU Level of Service	A
Analysis Period (min)	15		

c Critical Lane Group

Movement	EBL	EBT	EBR	WBL	WBT	WBR	NBL	NBT	NBR	SBL	SBT	SBR
Lane Configurations												
Ideal Flow (vphpl)	1900	1900	1900	1900	1900	1900	1900	1900	1900	1900	1900	1900
Total Lost time (s)	3.0	3.0	3.0	3.0	3.0	3.0	3.0	3.0	3.0	3.0	3.0	3.0
Lane Util. Factor	1.00	0.95	1.00	0.97	0.95	1.00	0.97	0.95	1.00	0.97	0.95	1.00
Frt	1.00	1.00	0.85	1.00	1.00	0.85	1.00	1.00	0.85	1.00	1.00	0.85
Flt Protected	0.95	1.00	1.00	0.95	1.00	1.00	0.95	1.00	1.00	0.95	1.00	1.00
Satd. Flow (prot)	1770	3539	1583	3433	3539	1583	3433	3539	1583	3433	3539	1583
Flt Permitted	0.95	1.00	1.00	0.95	1.00	1.00	0.95	1.00	1.00	0.95	1.00	1.00
Satd. Flow (perm)	1770	3539	1583	3433	3539	1583	3433	3539	1583	3433	3539	1583
Volume (vph)	199	133	220	191	240	306	334	902	146	164	876	360
Peak-hour factor, PHF	0.95	0.95	0.95	0.95	0.95	0.95	0.95	0.95	0.95	0.95	0.95	0.95
Adj. Flow (vph)	209	140	232	201	253	322	352	949	154	173	922	379
RTOR Reduction (vph)	0	0	0	0	0	0	0	0	0	0	0	0
Lane Group Flow (vph)	209	140	232	201	253	322	352	949	154	173	922	379
Turn Type	Prot		Free	Prot		Free	Prot		Free	Prot		Free
Protected Phases	7	4		3	8		5	2		1	6	
Permitted Phases			Free			Free			Free			Free
Actuated Green, G (s)	17.3	21.4	121.7	12.5	16.6	121.7	16.6	48.1	121.7	11.7	43.2	121.7
Effective Green, g (s)	21.3	25.4	121.7	16.5	20.6	121.7	20.6	52.1	121.7	15.7	47.2	121.7
Actuated g/C Ratio	0.18	0.21	1.00	0.14	0.17	1.00	0.17	0.43	1.00	0.13	0.39	1.00
Clearance Time (s)	7.0	7.0		7.0	7.0		7.0	7.0		7.0	7.0	
Vehicle Extension (s)	3.0	3.0		3.0	3.0		3.0	5.0		3.0	5.0	
Lane Grp Cap (vph)	310	739	1583	465	599	1583	581	1515	1583	443	1373	1583
v/s Ratio Prot	c0.12	0.04		0.06	c0.07		c0.10	0.27		0.05	c0.26	
v/s Ratio Perm			0.15			0.20			0.10			0.24
v/c Ratio	0.67	0.19	0.15	0.43	0.42	0.20	0.61	0.63	0.10	0.39	0.67	0.24
Uniform Delay, d1	47.0	39.7	0.0	48.3	45.2	0.0	46.8	27.2	0.0	48.6	30.8	0.0
Progression Factor	1.00	1.00	1.00	1.00	1.00	1.00	1.00	1.00	1.00	1.00	1.00	1.00
Incremental Delay, d2	5.7	0.1	0.2	0.6	0.5	0.3	1.8	1.2	0.1	0.6	1.7	0.4
Delay (s)	52.6	39.8	0.2	48.9	45.7	0.3	48.6	28.4	0.1	49.2	32.5	0.4
Level of Service	D	D	A	D	D	A	D	C	A	D	C	A
Approach Delay (s)		28.6			27.7			30.3			26.2	
Approach LOS		C			C			C			C	

Intersection Summary			
HCM Average Control Delay	28.2	HCM Level of Service	C
HCM Volume to Capacity ratio	0.61		
Actuated Cycle Length (s)	121.7	Sum of lost time (s)	12.0
Intersection Capacity Utilization	70.6%	ICU Level of Service	C
Analysis Period (min)	15		

c Critical Lane Group

Movement	EBL	EBR	NBL	NBT	SBT	SBR
Lane Configurations						
Ideal Flow (vphpl)	1900	1900	1900	1900	1900	1900
Total Lost time (s)	4.0			4.0	4.0	
Lane Util. Factor	0.97			0.95	0.95	
Frt	0.97			1.00	0.99	
Flt Protected	0.96			1.00	1.00	
Satd. Flow (prot)	3367			3534	3512	
Flt Permitted	0.96			0.70	1.00	
Satd. Flow (perm)	3367			2486	3512	
Volume (vph)	204	54	57	1849	1864	101
Peak-hour factor, PHF	0.95	0.95	0.95	0.95	0.95	0.95
Adj. Flow (vph)	215	57	60	1946	1962	106
RTOR Reduction (vph)	23	0	0	0	4	0
Lane Group Flow (vph)	249	0	0	2006	2064	0
Turn Type			Perm			
Protected Phases	4			2	6	
Permitted Phases			2			
Actuated Green, G (s)	10.4			85.0	85.0	
Effective Green, g (s)	13.4			88.0	88.0	
Actuated g/C Ratio	0.12			0.80	0.80	
Clearance Time (s)	7.0			7.0	7.0	
Vehicle Extension (s)	2.0			3.0	3.0	
Lane Grp Cap (vph)	412			2000	2825	
v/s Ratio Prot	c0.07				0.59	
v/s Ratio Perm				c0.81		
v/c Ratio	0.60			1.00	0.73	
Uniform Delay, d1	45.5			10.7	5.1	
Progression Factor	1.00			1.00	1.00	
Incremental Delay, d2	1.7			20.8	1.0	
Delay (s)	47.2			31.5	6.1	
Level of Service	D			C	A	
Approach Delay (s)	47.2			31.5	6.1	
Approach LOS	D			C	A	

Intersection Summary			
HCM Average Control Delay	20.4	HCM Level of Service	C
HCM Volume to Capacity ratio	0.95		
Actuated Cycle Length (s)	109.4	Sum of lost time (s)	8.0
Intersection Capacity Utilization	106.5%	ICU Level of Service	G
Analysis Period (min)	15		

c Critical Lane Group

HCM Signalized Intersection Capacity Analysis — Kincora
13: Nokes Blvd & Atlantic Blvd — 2015 Future Background

Movement	EBL	EBT	EBR	WBL	WBT	WBR	NBL	NBT	NBR	SBL	SBT	SBR
Lane Configurations												
Ideal Flow (vphpl)	1900	1900	1900	1900	1900	1900	1900	1900	1900	1900	1900	1900
Total Lost time (s)	4.0	4.0	4.0	3.0	4.0	3.0	4.0	3.0	3.0	3.0	3.0	4.0
Lane Util. Factor	0.97	0.95	1.00	0.97	0.95	1.00	0.97	0.95	1.00	0.97	0.95	1.00
Frt	1.00	1.00	0.85	1.00	1.00	0.85	1.00	1.00	0.85	1.00	1.00	0.85
Flt Protected	0.95	1.00	1.00	0.95	1.00	1.00	0.95	1.00	1.00	0.95	1.00	1.00
Satd. Flow (prot)	3433	3539	1583	3433	3539	1583	3433	3539	1583	3433	3539	1583
Flt Permitted	0.95	1.00	1.00	0.95	1.00	1.00	0.95	1.00	1.00	0.95	1.00	1.00
Satd. Flow (perm)	3433	3539	1583	3433	3539	1583	3433	3539	1583	3433	3539	1583
Volume (vph)	431	545	433	223	592	90	1129	346	287	68	206	486
Peak-hour factor, PHF	0.95	0.95	0.95	0.95	0.95	0.95	0.95	0.95	0.95	0.95	0.95	0.95
Adj. Flow (vph)	454	574	456	235	623	95	1188	364	302	72	217	512
RTOR Reduction (vph)	0	0	0	0	0	0	0	0	56	0	0	0
Lane Group Flow (vph)	454	574	456	235	623	95	1188	364	246	72	217	512
Turn Type	Prot		Free	Prot		Free	Prot		pm+ov	Prot		Free
Protected Phases	1	6		5	2		7	4	5	3	8	
Permitted Phases			Free			Free			4			Free
Actuated Green, G (s)	12.5	21.0	100.0	8.1	16.6	100.0	36.0	39.4	47.5	4.0	7.4	100.0
Effective Green, g (s)	15.5	24.0	100.0	12.1	19.6	100.0	39.0	42.9	55.0	8.0	10.9	100.0
Actuated g/C Ratio	0.16	0.24	1.00	0.12	0.20	1.00	0.39	0.43	0.55	0.08	0.11	1.00
Clearance Time (s)	7.0	7.0		7.0	7.0		7.0	6.5	7.0	7.0	6.5	
Vehicle Extension (s)	2.5	4.0		2.5	4.0		2.5	2.5	2.5	2.5	2.5	
Lane Grp Cap (vph)	532	849	1583	415	694	1583	1339	1518	918	275	386	1583
v/s Ratio Prot	c0.13	0.16		0.07	c0.18		c0.35	0.10	0.03	0.02	c0.06	
v/s Ratio Perm			0.29			0.06			0.12			0.32
v/c Ratio	0.85	0.68	0.29	0.57	0.90	0.06	0.89	0.24	0.27	0.26	0.56	0.32
Uniform Delay, d1	41.1	34.5	0.0	41.5	39.2	0.0	28.4	18.2	11.9	43.2	42.3	0.0
Progression Factor	1.00	1.00	1.00	1.00	1.00	1.00	1.00	1.00	1.00	1.00	1.00	1.00
Incremental Delay, d2	12.4	4.3	0.5	1.4	16.7	0.1	7.4	0.1	0.1	0.4	1.5	0.5
Delay (s)	53.6	38.8	0.5	42.9	55.9	0.1	35.9	18.2	12.0	43.6	43.8	0.5
Level of Service	D	D	A	D	E	A	D	B	B	D	D	A
Approach Delay (s)		31.5			47.1			28.5			16.1	
Approach LOS		C			D			C			B	

Intersection Summary

HCM Average Control Delay	30.9	HCM Level of Service	C
HCM Volume to Capacity ratio	0.84		
Actuated Cycle Length (s)	100.0	Sum of lost time (s)	15.0
Intersection Capacity Utilization	79.9%	ICU Level of Service	D
Analysis Period (min)	15		

c Critical Lane Group

HCM Signalized Intersection Capacity Analysis — Kincora
14: Nokes Blvd. & Cascades Parkway — 2015 Future Background

Movement	EBL	EBT	EBR	WBL	WBT	WBR	NBL	NBT	NBR	SBL	SBT	SBR
Lane Configurations												
Ideal Flow (vphpl)	1900	1900	1900	1900	1900	1900	1900	1900	1900	1900	1900	1900
Total Lost time (s)	3.0	3.0	3.0	3.0	3.0	3.0	3.0	3.0	3.0	3.0	3.0	3.0
Lane Util. Factor	0.97	1.00	1.00	1.00	0.95	1.00	0.97	0.95	1.00	1.00	0.95	1.00
Frt	1.00	1.00	0.85	1.00	1.00	0.85	1.00	1.00	0.85	1.00	1.00	0.85
Flt Protected	0.95	1.00	1.00	0.95	1.00	1.00	0.95	1.00	1.00	0.95	1.00	1.00
Satd. Flow (prot)	3433	1863	1583	1770	3539	1583	3433	3539	1583	1770	3539	1583
Flt Permitted	0.95	1.00	1.00	0.95	1.00	1.00	0.95	1.00	1.00	0.95	1.00	1.00
Satd. Flow (perm)	3433	1863	1583	1770	3539	1583	3433	3539	1583	1770	3539	1583
Volume (vph)	329	385	260	238	179	33	244	1273	298	4	909	258
Peak-hour factor, PHF	0.95	0.95	0.95	0.95	0.95	0.95	0.95	0.95	0.95	0.95	0.95	0.95
Adj. Flow (vph)	346	405	274	251	188	35	257	1340	314	4	957	272
RTOR Reduction (vph)	0	0	187	0	0	27	0	0	130	0	0	173
Lane Group Flow (vph)	346	405	87	251	188	8	257	1340	184	4	957	99
Turn Type	Prot		Perm	Prot		Perm	Prot		Perm	Prot		Perm
Protected Phases	7	4		3	8		1	6		5	2	
Permitted Phases			4			8			6			2
Actuated Green, G (s)	15.5	22.9	22.9	14.8	22.2	22.2	10.0	44.9	44.9	2.0	36.9	36.9
Effective Green, g (s)	19.5	27.9	27.9	18.8	27.2	27.2	14.0	49.4	49.4	6.0	41.4	41.4
Actuated g/C Ratio	0.17	0.24	0.24	0.16	0.24	0.24	0.12	0.43	0.43	0.05	0.36	0.36
Clearance Time (s)	7.0	8.0	8.0	7.0	8.0	8.0	7.0	7.5	7.5	7.0	7.5	7.5
Vehicle Extension (s)	3.0	3.0	3.0	3.0	3.0	3.0	3.0	3.0	3.0	3.0	3.0	3.0
Lane Grp Cap (vph)	587	456	387	292	844	377	421	1532	685	93	1284	574
v/s Ratio Prot	0.10	c0.22		c0.14	0.05		c0.07	c0.38		0.00	0.27	
v/s Ratio Perm			0.06			0.01			0.12			0.06
v/c Ratio	0.59	0.89	0.23	0.86	0.22	0.02	0.61	0.87	0.27	0.04	0.75	0.17
Uniform Delay, d1	43.6	41.6	34.5	46.4	34.9	33.3	47.5	29.5	20.8	51.3	31.7	24.7
Progression Factor	1.00	1.00	1.00	1.00	1.00	1.00	1.00	1.00	1.00	1.00	1.00	1.00
Incremental Delay, d2	1.5	18.5	0.3	21.4	0.1	0.0	2.6	5.9	0.2	0.2	2.4	0.1
Delay (s)	45.1	60.1	34.8	67.8	35.1	33.3	50.1	35.4	21.0	51.5	34.1	24.8
Level of Service	D	E	C	E	D	C	D	D	C	D	C	C
Approach Delay (s)		48.3			52.3			35.0			32.1	
Approach LOS		D			D			D			C	

Intersection Summary

HCM Average Control Delay	38.9	HCM Level of Service	D
HCM Volume to Capacity ratio	0.84		
Actuated Cycle Length (s)	114.1	Sum of lost time (s)	9.0
Intersection Capacity Utilization	90.3%	ICU Level of Service	E
Analysis Period (min)	15		

c Critical Lane Group

Movement	EBL	EBR	NBL	NBT	SBT	SBR
Lane Configurations						
Ideal Flow (vphpl)	1900	1900	1900	1900	1900	1900
Total Lost time (s)	3.0	3.0	3.0	3.0	3.0	3.0
Lane Util. Factor	1.00	1.00	1.00	0.95	0.95	1.00
Frt	1.00	0.85	1.00	1.00	1.00	0.85
Flt Protected	0.95	1.00	0.95	1.00	1.00	1.00
Satd. Flow (prot)	1770	1583	1770	3539	3539	1583
Flt Permitted	0.95	1.00	0.09	1.00	1.00	1.00
Satd. Flow (perm)	1770	1583	162	3539	3539	1583
Volume (vph)	211	183	249	1577	1196	116
Peak-hour factor, PHF	0.95	0.95	0.95	0.95	0.95	0.95
Adj. Flow (vph)	222	193	262	1660	1259	122
RTOR Reduction (vph)	0	149	0	0	0	37
Lane Group Flow (vph)	222	44	262	1660	1259	85
Turn Type		Perm	pm+pt			pm+ov
Protected Phases	4		1	6	2	4
Permitted Phases		4	6			2
Actuated Green, G (s)	16.9	16.9	60.9	60.9	39.5	56.4
Effective Green, g (s)	20.9	20.9	64.4	64.4	43.0	63.9
Actuated g/C Ratio	0.23	0.23	0.71	0.71	0.47	0.70
Clearance Time (s)	7.0	7.0	7.0	6.5	6.5	7.0
Vehicle Extension (s)	3.0	3.0	4.0	4.0	4.0	3.0
Lane Grp Cap (vph)	405	362	438	2496	1667	1160
v/s Ratio Prot	c0.13		0.12	c0.47	c0.36	0.02
v/s Ratio Perm		0.03	0.30			0.04
v/c Ratio	0.55	0.12	0.60	0.67	0.76	0.07
Uniform Delay, d1	31.0	27.9	19.8	7.5	19.8	4.3
Progression Factor	1.00	1.00	1.00	1.00	1.00	1.00
Incremental Delay, d2	1.5	0.2	2.6	0.7	2.1	0.0
Delay (s)	32.6	28.1	22.4	8.2	22.0	4.4
Level of Service	C	C	C	A	C	A
Approach Delay (s)	30.5			10.1	20.4	
Approach LOS	C			B	C	

Intersection Summary			
HCM Average Control Delay	16.2	HCM Level of Service	B
HCM Volume to Capacity ratio	0.69		
Actuated Cycle Length (s)	91.3	Sum of lost time (s)	9.0
Intersection Capacity Utilization	68.5%	ICU Level of Service	C
Analysis Period (min)	15		

c Critical Lane Group

Movement	EBL	EBT	EBR	WBL	WBT	WBR	NBL	NBT	NBR	SBL	SBT	SBR
Lane Configurations												
Ideal Flow (vphpl)	1900	1900	1900	1900	1900	1900	1900	1900	1900	1900	1900	1900
Total Lost time (s)	3.0	3.0	3.0	3.0	3.0	3.0	3.0	3.0	3.0	3.0	3.0	3.0
Lane Util. Factor	0.97	0.91	1.00	0.97	0.91	1.00	0.97	0.95	1.00	0.97	0.95	1.00
Frt	1.00	1.00	0.85	1.00	1.00	0.85	1.00	1.00	0.85	1.00	1.00	0.85
Flt Protected	0.95	1.00	1.00	0.95	1.00	1.00	0.95	1.00	1.00	0.95	1.00	1.00
Satd. Flow (prot)	3433	5085	1583	3433	5085	1583	3433	3539	1583	3433	3539	1583
Flt Permitted	0.95	1.00	1.00	0.95	1.00	1.00	0.95	1.00	1.00	0.95	1.00	1.00
Satd. Flow (perm)	3433	5085	1583	3433	5085	1583	3433	3539	1583	3433	3539	1583
Volume (vph)	245	676	194	216	1699	1205	127	549	106	762	394	231
Peak-hour factor, PHF	0.95	0.95	0.95	0.95	0.95	0.95	0.95	0.95	0.95	0.95	0.95	0.95
Adj. Flow (vph)	258	712	204	227	1788	1268	134	578	112	802	415	243
RTOR Reduction (vph)	0	0	0	0	0	0	0	0	29	0	0	14
Lane Group Flow (vph)	258	712	204	227	1788	1268	134	578	83	802	415	229
Turn Type	Prot		Free	Prot		Free	Prot		pm+ov	Prot		pm+ov
Protected Phases	1	6		5	2		3	8	5	7	4	1
Permitted Phases			Free			Free			8			4
Actuated Green, G (s)	8.3	42.3	135.0	11.0	45.0	135.0	7.7	24.7	35.7	29.5	46.5	54.8
Effective Green, g (s)	12.3	46.3	135.0	15.0	49.0	135.0	11.7	28.2	43.2	33.5	50.0	62.3
Actuated g/C Ratio	0.09	0.34	1.00	0.11	0.36	1.00	0.09	0.21	0.32	0.25	0.37	0.46
Clearance Time (s)	7.0	7.0		7.0	7.0		7.0	6.5	7.0	7.0	6.5	7.0
Vehicle Extension (s)	2.0	3.0		2.0	3.0		2.0	2.0	2.0	2.0	2.0	2.0
Lane Grp Cap (vph)	313	1744	1583	381	1846	1583	298	739	542	852	1311	766
v/s Ratio Prot	0.08	0.14		0.07	c0.35		0.04	0.16	0.02	c0.23	0.12	0.03
v/s Ratio Perm			0.13			c0.80			0.04			0.12
v/c Ratio	0.82	0.41	0.13	0.60	0.97	0.80	0.45	0.78	0.15	0.94	0.32	0.30
Uniform Delay, d1	60.3	33.9	0.0	57.1	42.2	0.0	58.6	50.5	32.8	49.8	30.3	22.7
Progression Factor	1.00	1.00	1.00	1.00	1.00	1.00	1.00	1.00	1.00	1.00	1.00	1.00
Incremental Delay, d2	15.3	0.7	0.2	1.7	14.7	4.4	0.4	5.0	0.0	18.0	0.1	0.1
Delay (s)	75.6	34.6	0.2	58.8	57.0	4.4	59.0	55.5	32.9	67.8	30.4	22.8
Level of Service	E	C	A	E	E	A	E	E	C	E	C	C
Approach Delay (s)		37.6			36.8			53.0			49.8	
Approach LOS		D			D			D			D	

Intersection Summary			
HCM Average Control Delay	41.7	HCM Level of Service	D
HCM Volume to Capacity ratio	0.88		
Actuated Cycle Length (s)	135.0	Sum of lost time (s)	0.0
Intersection Capacity Utilization	90.1%	ICU Level of Service	E
Analysis Period (min)	15		

c Critical Lane Group

HCM Signalized Intersection Capacity Analysis — Kincora
19: Farmwell Road & Smith Switch Road — 2015 Future Background

Movement	EBL	EBT	EBR	WBL	WBT	WBR	NBL	NBT	NBR	SBL	SBT	SBR
Lane Configurations												
Ideal Flow (vphpl)	1900	1900	1900	1900	1900	1900	1900	1900	1900	1900	1900	1900
Total Lost time (s)	3.0	3.0	3.0	3.0	3.0	3.0	3.0	3.0	3.0	3.0	3.0	
Lane Util. Factor	1.00	0.91	1.00	1.00	0.91	1.00	1.00	0.95	1.00	1.00	0.95	
Frt	1.00	1.00	0.85	1.00	1.00	0.85	1.00	1.00	0.85	1.00	0.90	
Flt Protected	0.95	1.00	1.00	0.95	1.00	1.00	0.95	1.00	1.00	0.95	1.00	
Satd. Flow (prot)	1770	5085	1583	1770	5085	1583	1770	3539	1583	1770	3170	
Flt Permitted	0.95	1.00	1.00	0.95	1.00	1.00	0.61	1.00	1.00	0.55	1.00	
Satd. Flow (perm)	1770	5085	1583	1770	5085	1583	1141	3539	1583	1027	3170	
Volume (vph)	27	1443	92	417	2493	159	145	33	421	290	65	147
Peak-hour factor, PHF	0.95	0.95	0.95	0.95	0.95	0.95	0.95	0.95	0.95	0.95	0.95	0.95
Adj. Flow (vph)	28	1519	97	439	2624	167	153	35	443	305	68	155
RTOR Reduction (vph)	0	0	51	0	0	35	0	0	0	0	109	0
Lane Group Flow (vph)	28	1519	46	439	2624	132	153	35	443	305	114	0
Turn Type	Prot		pm+ov	Prot		pm+ov	pm+pt		Free	pm+pt		
Protected Phases	1	6	3	5	2	7	3	8		7	4	
Permitted Phases			6			2	8		Free	4		
Actuated Green, G (s)	4.2	47.7	59.3	35.9	79.4	103.2	17.2	5.6	140.0	36.4	17.8	
Effective Green, g (s)	8.2	51.2	66.8	39.9	82.9	110.7	24.7	9.1	140.0	39.9	21.3	
Actuated g/C Ratio	0.06	0.37	0.48	0.28	0.59	0.79	0.18	0.06	1.00	0.28	0.15	
Clearance Time (s)	7.0	6.5	7.0	7.0	6.5	7.0	7.0	6.5		7.0	6.5	
Vehicle Extension (s)	2.0	3.0	2.0	2.0	3.0	2.0	2.0	2.0		2.0	2.0	
Lane Grp Cap (vph)	104	1860	789	504	3011	1286	271	230	1583	440	482	
v/s Ratio Prot	0.02	0.30	0.01	c0.25	c0.52	0.02	0.06	0.01		c0.14	0.04	
v/s Ratio Perm			0.02			0.06	0.04		0.28	c0.06		
v/c Ratio	0.27	0.82	0.06	0.87	0.87	0.10	0.56	0.15	0.28	0.69	0.24	
Uniform Delay, d1	63.0	40.2	19.7	47.6	24.1	3.3	52.0	61.8	0.0	43.3	52.2	
Progression Factor	1.00	1.00	1.00	1.00	1.00	1.00	1.00	1.00	1.00	1.00	1.00	
Incremental Delay, d2	0.5	4.1	0.0	14.7	3.8	0.0	1.6	0.1	0.4	3.8	1.2	
Delay (s)	63.5	44.3	19.7	62.3	27.9	3.3	53.6	61.9	0.4	47.1	53.4	
Level of Service	E	D	B	E	C	A	D	E	A	D	D	
Approach Delay (s)		43.1			31.3			16.7			49.7	
Approach LOS		D			C			B			D	

Intersection Summary			
HCM Average Control Delay	34.6	HCM Level of Service	C
HCM Volume to Capacity ratio	0.81		
Actuated Cycle Length (s)	140.0	Sum of lost time (s)	6.0
Intersection Capacity Utilization	89.2%	ICU Level of Service	E
Analysis Period (min)	15		

c Critical Lane Group

HCM Signalized Intersection Capacity Analysis — Kincora
21: Waxpool Road & Nokes Blvd — 2015 Future Background

Movement	EBL	EBT	EBR	WBL	WBT	WBR	NBL	NBT	NBR	SBL	SBT	SBR
Lane Configurations												
Ideal Flow (vphpl)	1900	1900	1900	1900	1900	1900	1900	1900	1900	1900	1900	1900
Total Lost time (s)	3.0	3.0	3.0	3.0	3.0	3.0	3.0	3.0	3.0	3.0	3.0	3.0
Lane Util. Factor	0.97	0.86	1.00	0.97	0.86	1.00	0.97	0.95	1.00	0.97	0.95	1.00
Frt	1.00	1.00	0.85	1.00	1.00	0.85	1.00	1.00	0.85	1.00	1.00	0.85
Flt Protected	0.95	1.00	1.00	0.95	1.00	1.00	0.95	1.00	1.00	0.95	1.00	1.00
Satd. Flow (prot)	3433	6408	1583	3433	6408	1583	3433	3539	1583	3433	3539	1583
Flt Permitted	0.95	1.00	1.00	0.95	1.00	1.00	0.95	1.00	1.00	0.95	1.00	1.00
Satd. Flow (perm)	3433	6408	1583	3433	6408	1583	3433	3539	1583	3433	3539	1583
Volume (vph)	169	2518	243	88	4153	337	400	40	685	304	22	272
Peak-hour factor, PHF	0.95	0.95	0.95	0.95	0.95	0.95	0.95	0.95	0.95	0.95	0.95	0.95
Adj. Flow (vph)	178	2651	256	93	4372	355	421	42	721	320	23	286
RTOR Reduction (vph)	0	0	85	0	0	0	0	0	0	0	0	0
Lane Group Flow (vph)	178	2651	171	93	4372	355	421	42	721	320	23	286
Turn Type	Prot		Perm	Prot		Free	Prot		Free	Prot		Free
Protected Phases	1	6		5	2		7	4		3	8	
Permitted Phases			6			Free			Free			Free
Actuated Green, G (s)	5.9	92.6	92.6	5.3	92.0	145.0	15.5	8.9	145.0	12.2	3.6	145.0
Effective Green, g (s)	9.9	96.8	96.6	9.3	96.0	145.0	19.5	10.9	145.0	16.2	7.8	145.0
Actuated g/C Ratio	0.07	0.67	0.67	0.06	0.66	1.00	0.13	0.08	1.00	0.11	0.05	1.00
Clearance Time (s)	7.0	7.0	7.0	7.0	7.0		7.0	7.0		7.0	7.0	
Vehicle Extension (s)	2.0	3.0	3.0	2.0	3.0		3.0	3.0		3.0	3.0	
Lane Grp Cap (vph)	234	4269	1055	220	4243	1583	462	266	1583	384	185	1583
v/s Ratio Prot	c0.05	0.41		0.03	c0.68		c0.12	0.01		0.09	0.01	
v/s Ratio Perm			0.11			0.22			c0.46			0.18
v/c Ratio	0.76	0.62	0.16	0.42	1.03	0.22	0.91	0.16	0.46	0.83	0.12	0.18
Uniform Delay, d1	66.4	13.8	9.1	65.3	24.5	0.0	61.9	62.8	0.0	63.1	65.5	0.0
Progression Factor	1.00	1.00	1.00	1.00	1.00	1.00	1.00	1.00	1.00	1.00	1.00	1.00
Incremental Delay, d2	12.3	0.7	0.3	0.5	22.4	0.3	22.1	0.3	0.9	14.3	0.3	0.3
Delay (s)	78.7	14.5	9.4	65.7	46.9	0.3	84.0	63.0	0.9	77.4	65.8	0.3
Level of Service	E	B	A	E	D	A	F	E	A	E	E	A
Approach Delay (s)		17.7			43.9			32.7			41.9	
Approach LOS		B			D			C			D	

Intersection Summary			
HCM Average Control Delay	34.1	HCM Level of Service	C
HCM Volume to Capacity ratio	0.95		
Actuated Cycle Length (s)	145.0	Sum of lost time (s)	9.0
Intersection Capacity Utilization	93.1%	ICU Level of Service	F
Analysis Period (min)	15		

c Critical Lane Group

Movement	EBL	EBT	EBR	WBL	WBT	WBR	NBL	NBT	NBR	SBL	SBT	SBR
Lane Configurations												
Ideal Flow (vphpl)	1900	1900	1900	1900	1900	1900	1900	1900	1900	1900	1900	1900
Total Lost time (s)		3.0		3.0	3.0			3.0	3.0		3.0	
Lane Util. Factor		0.95		1.00	0.95			1.00	1.00		1.00	
Frt		0.99		1.00	1.00			1.00	0.85		0.94	
Flt Protected		1.00		0.95	1.00			0.95	1.00		0.98	
Satd. Flow (prot)		3501		1770	3539			1775	1583		1724	
Flt Permitted		0.92		0.05	1.00			0.72	1.00		0.89	
Satd. Flow (perm)		3227		90	3539			1334	1583		1558	
Volume (vph)	25	1694	125	165	1064	0	180	2	262	7	3	7
Peak-hour factor, PHF	0.95	0.95	0.95	0.95	0.95	0.95	0.95	0.95	0.95	0.95	0.95	0.95
Adj. Flow (vph)	26	1783	132	174	1120	0	189	2	276	7	3	7
RTOR Reduction (vph)	0	4	0	0	0	0	0	0	0	0	6	0
Lane Group Flow (vph)	0	1937	0	174	1120	0	0	191	276	0	11	0
Turn Type	Perm			pm+pt			Perm		pm+ov	Perm		
Protected Phases		6		5	2			4	5		8	
Permitted Phases	6			2			4		4	8		
Actuated Green, G (s)		77.0		91.9	91.9			19.6	29.0		19.6	
Effective Green, g (s)		80.0		94.9	94.9			22.6	34.5		22.6	
Actuated g/C Ratio		0.65		0.77	0.77			0.18	0.28		0.18	
Clearance Time (s)		6.0		5.5	6.0			6.0	5.5		6.0	
Vehicle Extension (s)		4.0		2.0	4.0			3.0	2.0		3.0	
Lane Grp Cap (vph)		2090		231	2719			244	481		285	
v/s Ratio Prot				c0.07	0.32				0.06			
v/s Ratio Perm		c0.60		0.51				c0.14	0.12		0.01	
v/c Ratio		0.93		0.75	0.41			0.78	0.57		0.04	
Uniform Delay, d1		19.2		38.1	4.8			48.1	38.2		41.5	
Progression Factor		1.00		1.00	1.00			1.00	1.00		1.00	
Incremental Delay, d2		7.8		11.6	0.1			15.0	1.0		0.1	
Delay (s)		27.0		49.7	5.0			63.1	39.2		41.6	
Level of Service		C		D	A			E	D		D	
Approach Delay (s)		27.0			11.0			49.0			41.6	
Approach LOS		C			B			D			D	

Intersection Summary			
HCM Average Control Delay	24.3	HCM Level of Service	C
HCM Volume to Capacity ratio	0.88		
Actuated Cycle Length (s)	123.5	Sum of lost time (s)	9.0
Intersection Capacity Utilization	107.7%	ICU Level of Service	G
Analysis Period (min)	15		

c Critical Lane Group

Movement	EBL	EBT	WBT	WBR	SBL	SBR
Lane Configurations						
Ideal Flow (vphpl)	1900	1900	1900	1900	1900	1900
Total Lost time (s)	3.0	3.0	3.0	3.0	3.0	3.0
Lane Util. Factor	0.97	0.95	0.91	0.91	0.97	1.00
Frt	1.00	1.00	0.99	0.85	1.00	0.85
Flt Protected	0.95	1.00	1.00	1.00	0.95	1.00
Satd. Flow (prot)	3433	3539	3342	1441	3433	1583
Flt Permitted	0.95	1.00	1.00	1.00	0.95	1.00
Satd. Flow (perm)	3433	3539	3342	1441	3433	1583
Volume (vph)	1132	598	553	782	649	747
Peak-hour factor, PHF	0.95	0.95	0.95	0.95	0.95	0.95
Adj. Flow (vph)	1192	629	582	823	683	786
RTOR Reduction (vph)	0	0	6	5	0	480
Lane Group Flow (vph)	1192	629	637	757	683	306
Turn Type	Prot			pm+ov		Perm
Protected Phases	5	2	6	4	4	
Permitted Phases				6		4
Actuated Green, G (s)	37.1	64.2	20.1	53.2	33.1	33.1
Effective Green, g (s)	41.1	68.2	24.1	61.7	37.6	37.6
Actuated g/C Ratio	0.37	0.61	0.22	0.55	0.34	0.34
Clearance Time (s)	7.0	7.0	7.0	7.5	7.5	7.5
Vehicle Extension (s)	2.0	3.0	3.0	3.0	3.0	3.0
Lane Grp Cap (vph)	1262	2159	720	834	1155	532
v/s Ratio Prot	c0.35	0.18	0.19	c0.31	0.20	
v/s Ratio Perm				0.22		0.19
v/c Ratio	0.94	0.29	0.88	0.91	0.59	0.58
Uniform Delay, d1	34.2	10.3	42.5	22.5	30.7	30.5
Progression Factor	1.00	1.00	1.00	1.00	1.00	1.00
Incremental Delay, d2	13.9	0.1	12.5	13.4	0.8	1.5
Delay (s)	48.2	10.4	55.0	35.9	31.6	32.0
Level of Service	D	B	D	D	C	C
Approach Delay (s)		35.1	44.6		31.8	
Approach LOS		D	D		C	

Intersection Summary			
HCM Average Control Delay	36.9	HCM Level of Service	D
HCM Volume to Capacity ratio	0.92		
Actuated Cycle Length (s)	111.8	Sum of lost time (s)	8.0
Intersection Capacity Utilization	84.4%	ICU Level of Service	E
Analysis Period (min)	15		

c Critical Lane Group

HCM Signalized Intersection Capacity Analysis — Kincora
24: Russel Branch Parkway & Loudoun County Parkway — 2015 Future Background

Movement	EBL	EBT	EBR	WBL	WBT	WBR	NBL	NBT	NBR	SBL	SBT	SBR
Lane Configurations												
Ideal Flow (vphpl)	1900	1900	1900	1900	1900	1900	1900	1900	1900	1900	1900	1900
Total Lost time (s)	4.0		4.0	4.0	4.0	4.0	4.0	4.0	4.0	4.0	4.0	4.0
Lane Util. Factor	0.97		1.00	1.00	1.00	1.00	1.00	0.95	1.00	1.00	0.95	1.00
Frt	1.00		0.85	1.00	1.00	0.85	1.00	1.00	0.85	1.00	1.00	0.85
Flt Protected	0.95		1.00	0.95	1.00	1.00	0.95	1.00	1.00	0.95	1.00	1.00
Satd. Flow (prot)	3433		1583	1770	1863	1583	1770	3539	1583	1770	3539	1583
Flt Permitted	0.95		1.00	0.95	1.00	1.00	0.06	1.00	1.00	0.07	1.00	1.00
Satd. Flow (perm)	3433		1583	1770	1863	1583	118	3539	1583	127	3539	1583
Volume (vph)	495	0	387	56	1	168	230	1634	12	35	1464	236
Peak-hour factor, PHF	0.95	0.95	0.95	0.95	0.95	0.95	0.95	0.95	0.95	0.95	0.95	0.95
Adj. Flow (vph)	521	0	407	59	1	177	242	1720	13	37	1541	248
RTOR Reduction (vph)	0	0	0	0	0	0	0	0	3	0	0	57
Lane Group Flow (vph)	521	0	407	59	1	177	242	1720	10	37	1541	191
Turn Type	Prot		Free	Prot		Free	pm+pt		pm+ov	pm+pt		pm+ov
Protected Phases	7	4		3	8		5	2	3	1	6	7
Permitted Phases			Free			Free	2		2	6		6
Actuated Green, G (s)	21.2		119.7	20.7	2.2	119.7	77.3	66.5	87.2	59.7	55.9	77.1
Effective Green, g (s)	22.2		119.7	21.7	5.2	119.7	80.3	69.5	91.2	65.7	58.9	81.1
Actuated g/C Ratio	0.19		1.00	0.18	0.04	1.00	0.67	0.58	0.76	0.55	0.49	0.68
Clearance Time (s)	5.0			5.0	7.0		7.0	7.0	5.0	7.0	7.0	5.0
Vehicle Extension (s)	2.0			2.0	2.0		2.0	2.0	2.0	2.0	2.0	2.0
Lane Grp Cap (vph)	637		1583	321	81	1583	319	2055	1259	163	1741	1125
v/s Ratio Prot	c0.15			0.03	0.00		c0.11	0.49	0.00	0.01	c0.44	0.03
v/s Ratio Perm			c0.26			0.11	0.40		0.00	0.11		0.09
v/c Ratio	0.82		0.26	0.18	0.01	0.11	0.76	0.84	0.01	0.23	0.89	0.17
Uniform Delay, d1	46.8		0.0	41.5	54.8	0.0	35.3	20.5	3.4	18.6	27.4	7.0
Progression Factor	1.00		1.00	1.00	1.00	1.00	1.00	1.00	1.00	1.00	1.00	1.00
Incremental Delay, d2	7.6		0.4	0.1	0.0	0.1	8.9	3.0	0.0	0.3	5.6	0.0
Delay (s)	54.4		0.4	41.6	54.8	0.1	44.1	23.5	3.4	18.9	33.0	7.1
Level of Service	D		A	D	D	A	D	C	A	B	C	A
Approach Delay (s)		30.7			10.7			25.9			29.2	
Approach LOS		C			B			C			C	

Intersection Summary

HCM Average Control Delay	27.3	HCM Level of Service	C
HCM Volume to Capacity ratio	0.80		
Actuated Cycle Length (s)	119.7	Sum of lost time (s)	12.0
Intersection Capacity Utilization	84.0%	ICU Level of Service	E
Analysis Period (min)	15		

c Critical Lane Group

HCM Unsignalized Intersection Capacity Analysis — Kincora
36: Gloucester Pkwy & WB Off-Ramp — 2015 Future Background

Movement	EBL	EBT	WBT	WBR	SWL	SWR
Lane Configurations						
Sign Control		Free	Free		Stop	
Grade		0%	0%		0%	
Volume (veh/h)	0	1012	47	0	0	10
Peak Hour Factor	0.92	0.92	0.92	0.92	0.92	0.92
Hourly flow rate (vph)	0	1100	51	0	0	11
Pedestrians						
Lane Width (ft)						
Walking Speed (ft/s)						
Percent Blockage						
Right turn flare (veh)						
Median type					None	
Median storage veh)						
Upstream signal (ft)						
pX, platoon unblocked						
vC, conflicting volume	51				601	26
vC1, stage 1 conf vol						
vC2, stage 2 conf vol						
vCu, unblocked vol	51				601	26
tC, single (s)	4.1				6.8	6.9
tC, 2 stage (s)						
tF (s)	2.2				3.5	3.3
p0 queue free %	100				100	99
cM capacity (veh/h)	1553				432	1044

Direction, Lane #	EB 1	EB 2	WB 1	WB 2	SW 1	SW 2
Volume Total	550	550	26	26	5	5
Volume Left	0	0	0	0	0	0
Volume Right	0	0	0	0	5	5
cSH	1700	1700	1700	1700	1044	1044
Volume to Capacity	0.32	0.32	0.02	0.02	0.01	0.01
Queue Length 95th (ft)	0	0	0	0	0	0
Control Delay (s)	0.0	0.0	0.0	0.0	8.5	8.5
Lane LOS					A	A
Approach Delay (s)	0.0		0.0		8.5	
Approach LOS					A	

Intersection Summary

Average Delay	0.1		
Intersection Capacity Utilization	31.3%	ICU Level of Service	A
Analysis Period (min)	15		

HCM Signalized Intersection Capacity Analysis
11: Smith Switch Road & Loudoun County Parkway

Kincora
2015 Future Background

Movement	EBL	EBR	NBL	NBT	SBT	SBR
Lane Configurations						
Ideal Flow (vphpl)	1900	1900	1900	1900	1900	1900
Total Lost time (s)	4.0			4.0	4.0	
Lane Util. Factor	0.97			0.95	0.95	
Frt	0.99			1.00	0.98	
Flt Protected	0.95			1.00	1.00	
Satd. Flow (prot)	3427			3537	3482	
Flt Permitted	0.95			0.94	1.00	
Satd. Flow (perm)	3427			3333	3482	
Volume (vph)	107	5	11	947	806	98
Peak-hour factor, PHF	0.95	0.95	0.95	0.95	0.95	0.95
Adj. Flow (vph)	113	5	12	997	848	103
RTOR Reduction (vph)	2	0	0	0	13	0
Lane Group Flow (vph)	116	0	0	1009	938	0
Turn Type			Perm			
Protected Phases	4			2	6	
Permitted Phases			2			
Actuated Green, G (s)	7.1			36.7	36.7	
Effective Green, g (s)	10.1			39.7	39.7	
Actuated g/C Ratio	0.17			0.69	0.69	
Clearance Time (s)	7.0			7.0	7.0	
Vehicle Extension (s)	2.0			3.0	3.0	
Lane Grp Cap (vph)	599			2289	2392	
v/s Ratio Prot	c0.03				0.27	
v/s Ratio Perm				c0.30		
v/c Ratio	0.19			0.44	0.39	
Uniform Delay, d1	20.4			4.1	3.9	
Progression Factor	1.00			1.00	1.00	
Incremental Delay, d2	0.1			0.1	0.1	
Delay (s)	20.4			4.2	4.0	
Level of Service	C			A	A	
Approach Delay (s)	20.4			4.2	4.0	
Approach LOS	C			A	A	

Intersection Summary			
HCM Average Control Delay	5.0	HCM Level of Service	A
HCM Volume to Capacity ratio	0.39		
Actuated Cycle Length (s)	57.8	Sum of lost time (s)	8.0
Intersection Capacity Utilization	46.4%	ICU Level of Service	A
Analysis Period (min)	15		

c Critical Lane Group

HCM Signalized Intersection Capacity Analysis
21: Waxpool Road & Nokes Blvd

Kincora
2015 Future Background

Movement	EBL	EBT	EBR	WBL	WBT	WBR	NBL	NBT	NBR	SBL	SBT	SBR
Lane Configurations												
Ideal Flow (vphpl)	1900	1900	1900	1900	1900	1900	1900	1900	1900	1900	1900	1900
Total Lost time (s)	3.0	3.0	3.0	3.0	3.0	3.0	3.0	3.0	3.0	3.0	3.0	3.0
Lane Util. Factor	0.97	0.86	1.00	0.97	0.86	1.00	0.97	0.95	1.00	0.97	0.95	1.00
Frt	1.00	1.00	0.85	1.00	1.00	0.85	1.00	1.00	0.85	1.00	1.00	0.85
Flt Protected	0.95	1.00	1.00	0.95	1.00	1.00	0.95	1.00	1.00	0.95	1.00	1.00
Satd. Flow (prot)	3433	6408	1583	3433	6408	1583	3433	3539	1583	3433	3539	1583
Flt Permitted	0.95	1.00	1.00	0.95	1.00	1.00	0.95	1.00	1.00	0.95	1.00	1.00
Satd. Flow (perm)	3433	6408	1583	3433	6408	1583	3433	3539	1583	3433	3539	1583
Volume (vph)	451	1844	127	23	1422	847	143	49	44	673	41	601
Peak-hour factor, PHF	0.95	0.95	0.95	0.95	0.95	0.95	0.95	0.95	0.95	0.95	0.95	0.95
Adj. Flow (vph)	475	1941	134	24	1497	892	151	52	46	708	43	633
RTOR Reduction (vph)	0	0	55	0	0	0	0	0	0	0	0	0
Lane Group Flow (vph)	475	1941	79	24	1497	892	151	52	46	708	43	633
Turn Type	Prot		Perm	Prot		Free	Prot		Free	Prot		Free
Protected Phases	1	6		5	2		7	4		3	8	
Permitted Phases			6			Free			Free			Free
Actuated Green, G (s)	15.6	82.0	82.0	3.0	69.4	145.0	18.8	4.8	145.0	27.2	13.2	145.0
Effective Green, g (s)	19.6	86.0	86.0	7.0	73.4	145.0	22.8	8.8	145.0	31.2	17.2	145.0
Actuated g/C Ratio	0.14	0.59	0.59	0.05	0.51	1.00	0.16	0.06	1.00	0.22	0.12	1.00
Clearance Time (s)	7.0	7.0	7.0	7.0	7.0		7.0	7.0		7.0	7.0	
Vehicle Extension (s)	2.0	3.0	3.0	2.0	3.0		3.0	3.0		3.0	3.0	
Lane Grp Cap (vph)	464	3801	939	166	3244	1583	540	215	1583	739	420	1583
v/s Ratio Prot	c0.14	0.30		0.01	0.23		0.04	0.01		c0.21	0.01	
v/s Ratio Perm			0.05			c0.58			0.03			0.40
v/c Ratio	1.02	0.51	0.08	0.14	0.46	0.56	0.28	0.24	0.03	0.96	0.10	0.40
Uniform Delay, d1	62.7	17.2	12.6	66.1	23.1	0.0	53.9	64.9	0.0	56.3	57.0	0.0
Progression Factor	1.00	1.00	1.00	1.00	1.00	1.00	1.00	1.00	1.00	1.00	1.00	1.00
Incremental Delay, d2	47.9	0.5	0.2	0.1	0.5	1.5	0.3	0.6	0.0	23.0	0.1	0.8
Delay (s)	110.6	17.7	12.8	66.3	23.5	1.5	54.1	65.5	0.0	79.3	57.1	0.8
Level of Service	F	B	B	E	C	A	D	E	A	E	E	A
Approach Delay (s)		34.8			15.8			46.5			42.7	
Approach LOS		C			B			D			D	

Intersection Summary			
HCM Average Control Delay	29.9	HCM Level of Service	C
HCM Volume to Capacity ratio	0.72		
Actuated Cycle Length (s)	145.0	Sum of lost time (s)	6.0
Intersection Capacity Utilization	69.3%	ICU Level of Service	C
Analysis Period (min)	15		

c Critical Lane Group

APPENDIX D-5

INTERSECTION CAPACITY ANALYSIS RESULTS – INTERIM BUILD-OUT YEAR (2015) CONDITIONS WITH DEVELOPMENT

HCM Signalized Intersection Capacity Analysis
5: Route 7 & Countryside Blvd.

Kincora
Total Future 2015

Movement	EBL	EBT	EBR	WBL	WBT	WBR	NBL	NBT	NBR	SBL	SBT	SBR
Lane Configurations												
Ideal Flow (vphpl)	1900	1900	1900	1900	1900	1900	1900	1900	1900	1900	1900	1900
Total Lost time (s)	3.0	3.0	3.0	3.0	3.0	3.0	3.0	3.0	3.0	3.0	3.0	3.0
Lane Util. Factor	0.97	0.86	1.00	0.97	0.86	1.00	0.97	0.95	1.00	0.97	0.95	1.00
Frt	1.00	1.00	0.85	1.00	1.00	0.85	1.00	1.00	0.85	1.00	1.00	0.85
Flt Protected	0.95	1.00	1.00	0.95	1.00	1.00	0.95	1.00	1.00	0.95	1.00	1.00
Satd. Flow (prot)	3433	6408	1583	3433	6408	1583	3433	3539	1583	3433	3539	1583
Flt Permitted	0.95	1.00	1.00	0.95	1.00	1.00	0.95	1.00	1.00	0.95	1.00	1.00
Satd. Flow (perm)	3433	6408	1583	3433	6408	1583	3433	3539	1583	3433	3539	1583
Volume (vph)	300	3193	135	119	2169	108	81	70	151	165	94	289
Peak-hour factor, PHF	0.95	0.95	0.95	0.95	0.95	0.95	0.95	0.95	0.95	0.95	0.95	0.95
Adj. Flow (vph)	316	3361	142	125	2283	114	85	74	159	174	99	304
RTOR Reduction (vph)	0	0	0	0	0	41	0	0	0	0	0	40
Lane Group Flow (vph)	316	3361	142	125	2283	73	85	74	159	174	99	264
Turn Type	Prot		Free	Prot		pm+ov	Prot		Free	Prot		pm+ov
Protected Phases	1	6		5	2	3	7	4		3	8	1
Permitted Phases			Free			2			Free			8
Actuated Green, G (s)	16.7	82.2	150.0	10.5	76.0	88.0	8.2	17.3	150.0	12.0	21.1	37.8
Effective Green, g (s)	20.7	86.2	150.0	14.5	80.0	96.0	12.2	21.3	150.0	16.0	25.1	45.8
Actuated g/C Ratio	0.14	0.57	1.00	0.10	0.53	0.64	0.08	0.14	1.00	0.11	0.17	0.31
Clearance Time (s)	7.0	7.0		7.0	7.0	7.0	7.0	7.0		7.0	7.0	7.0
Vehicle Extension (s)	2.0	2.0		3.0	2.0	2.0	2.0	2.0		2.0	2.0	2.0
Lane Grp Cap (vph)	474	3682	1583	332	3418	1045	279	503	1583	366	592	515
v/s Ratio Prot	c0.09	c0.52		0.04	0.36	0.01	0.02	0.02		c0.05	0.03	c0.07
v/s Ratio Perm			0.09			0.04			0.10			0.10
v/c Ratio	0.67	0.91	0.09	0.38	0.67	0.07	0.30	0.15	0.10	0.48	0.17	0.51
Uniform Delay, d1	61.4	28.5	0.0	63.5	25.4	10.2	64.9	56.4	0.0	63.1	53.5	42.9
Progression Factor	1.00	1.00	1.00	1.00	1.00	1.00	1.00	1.00	1.00	1.00	1.00	1.00
Incremental Delay, d2	2.7	4.6	0.1	0.7	1.1	0.0	0.2	0.0	0.1	0.4	0.0	0.4
Delay (s)	64.1	33.1	0.1	64.2	26.4	10.2	65.1	56.4	0.1	63.4	53.5	43.3
Level of Service	E	C	A	E	C	B	E	E	A	E	D	D
Approach Delay (s)		34.5			27.6			30.6			51.1	
Approach LOS		C			C			C			D	

Intersection Summary

HCM Average Control Delay	33.2	HCM Level of Service	C
HCM Volume to Capacity ratio	0.76		
Actuated Cycle Length (s)	150.0	Sum of lost time (s)	6.0
Intersection Capacity Utilization	72.6%	ICU Level of Service	C
Analysis Period (min)	15		

c Critical Lane Group

HCM Signalized Intersection Capacity Analysis
6: Route 7 & Pallsade Parkway

Kincora
Total Future 2015

Movement	EBL	EBT	EBR	WBL	WBT	WBR	NBL	NBT	NBR	SBL	SBT	SBR
Lane Configurations												
Ideal Flow (vphpl)	1900	1900	1900	1900	1900	1900	1900	1900	1900	1900	1900	1900
Total Lost time (s)	3.0	3.0	3.0	3.0	3.0	3.0	3.0	3.0	3.0	3.0	3.0	3.0
Lane Util. Factor	0.97	0.86	1.00	1.00	0.86	1.00	0.97	1.00	1.00	0.97	1.00	1.00
Frt	1.00	1.00	0.85	1.00	1.00	0.85	1.00	1.00	0.85	1.00	1.00	0.85
Flt Protected	0.95	1.00	1.00	0.95	1.00	1.00	0.95	1.00	1.00	0.95	1.00	1.00
Satd. Flow (prot)	3433	6408	1583	1770	6408	1583	3433	1863	1583	3433	1863	1583
Flt Permitted	0.95	1.00	1.00	0.95	1.00	1.00	0.95	1.00	1.00	0.95	1.00	1.00
Satd. Flow (perm)	3433	6408	1583	1770	6408	1583	3433	1863	1583	3433	1863	1583
Volume (vph)	162	2925	381	123	2115	73	58	34	42	131	82	208
Peak-hour factor, PHF	0.95	0.95	0.95	0.95	0.95	0.95	0.95	0.95	0.95	0.95	0.95	0.95
Adj. Flow (vph)	171	3079	401	129	2226	77	61	36	44	138	86	219
RTOR Reduction (vph)	0	0	0	0	0	0	0	0	9	0	0	31
Lane Group Flow (vph)	171	3079	401	129	2226	77	61	36	35	138	86	188
Turn Type	Prot		Free	Prot		Free	Prot		pm+ov	Prot		pm+ov
Protected Phases	1	6		5	2		7	4	5	3	8	1
Permitted Phases			Free			Free			4			8
Actuated Green, G (s)	10.8	65.9	120.0	11.5	66.6	120.0	4.8	5.4	16.9	9.2	9.8	20.6
Effective Green, g (s)	14.8	69.9	120.0	15.5	70.6	120.0	8.8	9.4	24.9	13.2	13.8	28.6
Actuated g/C Ratio	0.12	0.58	1.00	0.13	0.59	1.00	0.07	0.08	0.21	0.11	0.12	0.24
Clearance Time (s)	7.0	7.0		7.0	7.0		7.0	7.0	7.0	7.0	7.0	7.0
Vehicle Extension (s)	2.0	4.0		2.0	4.0		2.0	3.0	2.0	3.0	3.0	2.0
Lane Grp Cap (vph)	423	3733	1583	229	3770	1583	252	146	368	378	214	417
v/s Ratio Prot	0.05	c0.48		c0.07	0.35		0.02	0.02	0.01	c0.04	0.05	c0.06
v/s Ratio Perm			c0.25			0.05			0.01			0.06
v/c Ratio	0.40	0.82	0.25	0.56	0.59	0.05	0.24	0.25	0.10	0.37	0.40	0.45
Uniform Delay, d1	48.5	20.1	0.0	49.1	15.6	0.0	52.5	52.0	38.4	49.5	49.3	39.0
Progression Factor	1.00	1.00	1.00	1.00	1.00	1.00	1.00	1.00	1.00	1.00	1.00	1.00
Incremental Delay, d2	0.2	2.2	0.4	1.9	0.7	0.1	0.2	0.9	0.0	0.6	1.2	0.3
Delay (s)	48.8	22.3	0.4	51.0	16.3	0.1	52.6	52.9	38.5	50.1	50.5	39.3
Level of Service	D	C	A	D	B	A	D	D	D	D	D	D
Approach Delay (s)		21.2			17.6			48.3			44.8	
Approach LOS		C			B			D			D	

Intersection Summary

HCM Average Control Delay	22.0	HCM Level of Service	C
HCM Volume to Capacity ratio	0.69		
Actuated Cycle Length (s)	120.0	Sum of lost time (s)	9.0
Intersection Capacity Utilization	69.6%	ICU Level of Service	C
Analysis Period (min)	15		

c Critical Lane Group

Movement	WBL	WBR	NBT	NBR	SBL	SBT
Lane Configurations						
Ideal Flow (vphpl)	1900	1900	1900	1900	1900	1900
Total Lost time (s)	3.0	3.0	3.0		3.0	3.0
Lane Util. Factor	1.00	1.00	0.95		1.00	0.95
Frt	1.00	0.85	0.97		1.00	1.00
Flt Protected	0.95	1.00	1.00		0.95	1.00
Satd. Flow (prot)	1770	1583	3442		1770	3539
Flt Permitted	0.95	1.00	1.00		0.44	1.00
Satd. Flow (perm)	1770	1583	3442		811	3539
Volume (vph)	89	191	315	70	159	586
Peak-hour factor, PHF	0.95	0.95	0.95	0.95	0.95	0.95
Adj. Flow (vph)	94	201	332	74	167	617
RTOR Reduction (vph)	0	123	16	0	0	0
Lane Group Flow (vph)	94	78	390	0	167	617
Turn Type		pm+ov			pm+pt	
Protected Phases	4	1	2		1	6
Permitted Phases		4			6	
Actuated Green, G (s)	4.9	12.4	18.5		33.0	33.0
Effective Green, g (s)	8.9	20.4	23.0		37.5	37.5
Actuated g/C Ratio	0.17	0.39	0.44		0.72	0.72
Clearance Time (s)	7.0	7.0	7.5		7.0	7.5
Vehicle Extension (s)	2.0	2.0	2.0		2.0	2.0
Lane Grp Cap (vph)	301	707	1511		791	2533
v/s Ratio Prot	c0.05	0.02	0.11		0.05	c0.17
v/s Ratio Perm		0.03			0.10	
v/c Ratio	0.31	0.11	0.26		0.21	0.24
Uniform Delay, d1	19.1	10.2	9.3		2.5	2.6
Progression Factor	1.00	1.00	1.00		1.00	1.00
Incremental Delay, d2	0.2	0.0	0.0		0.0	0.0
Delay (s)	19.3	10.2	9.3		2.6	2.6
Level of Service	B	B	A		A	A
Approach Delay (s)	13.1		9.3			2.6
Approach LOS	B		A			A

Intersection Summary

HCM Average Control Delay	6.5	HCM Level of Service	A
HCM Volume to Capacity ratio	0.26		
Actuated Cycle Length (s)	52.4	Sum of lost time (s)	6.0
Intersection Capacity Utilization	37.1%	ICU Level of Service	A
Analysis Period (min)	15		

c Critical Lane Group

Movement	EBL	EBT	EBR	WBL	WBT	WBR	NBL	NBT	NBR	SBL	SBT	SBR
Lane Configurations												
Ideal Flow (vphpl)	1900	1900	1900	1900	1900	1900	1900	1900	1900	1900	1900	1900
Total Lost time (s)		4.0	4.0		4.0	4.0	4.0	4.0	4.0	4.0	4.0	4.0
Lane Util. Factor		1.00	1.00		1.00	1.00	1.00	0.95	1.00	1.00	0.95	1.00
Frt		1.00	0.85		1.00	0.85	1.00	1.00	0.85	1.00	1.00	0.85
Flt Protected		0.95	1.00		0.96	1.00	0.95	1.00	1.00	0.95	1.00	1.00
Satd. Flow (prot)		1778	1583		1783	1583	1770	3539	1583	1770	3539	1583
Flt Permitted		0.67	1.00		0.72	1.00	0.32	1.00	1.00	0.57	1.00	1.00
Satd. Flow (perm)		1257	1583		1335	1583	603	3539	1583	1063	3539	1583
Volume (vph)	41	2	145	71	9	38	35	282	15	9	720	39
Peak-hour factor, PHF	0.95	0.95	0.95	0.95	0.95	0.95	0.95	0.95	0.95	0.95	0.95	0.95
Adj. Flow (vph)	43	2	153	75	9	40	37	297	16	9	758	41
RTOR Reduction (vph)	0	0	132	0	0	35	0	0	5	0	0	14
Lane Group Flow (vph)	0	45	21	0	84	5	37	297	11	9	758	27
Turn Type	Perm		Perm	Perm		Perm	pm+pt		Perm	pm+pt		Perm
Protected Phases		4			8		5	2		1	6	
Permitted Phases	4		4	8		8	2		2	6		6
Actuated Green, G (s)		9.3	9.3		9.3	9.3	61.9	58.7	58.7	57.5	58.5	56.5
Effective Green, g (s)		12.3	12.3		12.3	12.3	67.9	61.7	61.7	63.5	59.5	59.5
Actuated g/C Ratio		0.14	0.14		0.14	0.14	0.75	0.69	0.69	0.71	0.66	0.66
Clearance Time (s)		7.0	7.0		7.0	7.0	7.0	7.0	7.0	7.0	7.0	7.0
Vehicle Extension (s)		2.0	2.0		2.0	2.0	2.0	2.0	2.0	2.0	2.0	2.0
Lane Grp Cap (vph)		172	216		182	216	535	2426	1085	781	2340	1047
v/s Ratio Prot							c0.00	0.08		0.00	c0.21	
v/s Ratio Perm		0.04	0.01		c0.06	0.00	0.05		0.01	0.01		0.02
v/c Ratio		0.26	0.10		0.46	0.03	0.07	0.12	0.01	0.01	0.32	0.03
Uniform Delay, d1		34.8	34.0		35.8	33.7	3.0	4.9	4.5	3.9	6.6	5.3
Progression Factor		1.00	1.00		1.00	1.00	1.00	1.00	1.00	1.00	1.00	1.00
Incremental Delay, d2		0.3	0.1		0.7	0.0	0.0	0.1	0.0	0.0	0.4	0.0
Delay (s)		35.1	34.1		36.5	33.7	3.1	5.0	4.5	3.9	6.9	5.3
Level of Service		D	C		D	C	A	A	A	A	A	A
Approach Delay (s)		34.3			35.6			4.7			6.8	
Approach LOS		C			D			A			A	

Intersection Summary

HCM Average Control Delay	12.4	HCM Level of Service	B
HCM Volume to Capacity ratio	0.34		
Actuated Cycle Length (s)	90.0	Sum of lost time (s)	16.0
Intersection Capacity Utilization	44.3%	ICU Level of Service	A
Analysis Period (min)	15		

c Critical Lane Group

Movement	EBL	EBT	EBR	WBL	WBT	WBR	NBL	NBT	NBR	SBL	SBT	SBR
Lane Configurations												
Ideal Flow (vphpl)	1900	1900	1900	1900	1900	1900	1900	1900	1900	1900	1900	1900
Total Lost time (s)	3.0	3.0	3.0	3.0	3.0	3.0	3.0	3.0	3.0	3.0	3.0	3.0
Lane Util. Factor	1.00	0.95	1.00	0.97	0.95	1.00	0.97	0.95	1.00	0.97	0.95	1.00
Frt	1.00	1.00	0.85	1.00	1.00	0.85	1.00	1.00	0.85	1.00	1.00	0.85
Flt Protected	0.95	1.00	1.00	0.95	1.00	1.00	0.95	1.00	1.00	0.95	1.00	1.00
Satd. Flow (prot)	1770	3539	1583	3433	3539	1583	3433	3539	1583	3433	3539	1583
Flt Permitted	0.95	1.00	1.00	0.95	1.00	1.00	0.95	1.00	1.00	0.95	1.00	1.00
Satd. Flow (perm)	1770	3539	1583	3433	3539	1583	3433	3539	1583	3433	3539	1583
Volume (vph)	257	383	394	205	150	157	217	654	296	318	470	65
Peak-hour factor, PHF	0.95	0.95	0.95	0.95	0.95	0.95	0.95	0.95	0.95	0.95	0.95	0.95
Adj. Flow (vph)	271	403	415	216	158	165	228	688	312	335	495	68
RTOR Reduction (vph)	0	0	0	0	0	0	0	0	0	0	0	0
Lane Group Flow (vph)	271	403	415	216	158	165	228	688	312	335	495	68
Turn Type	Prot		Free	Prot		Free	Prot		Free	Prot		Free
Protected Phases	7	4		3	8		5	2		1	6	
Permitted Phases			Free			Free			Free			Free
Actuated Green, G (s)	20.3	24.5	111.9	12.4	16.6	111.9	12.8	31.4	111.9	15.6	34.2	111.9
Effective Green, g (s)	24.3	28.5	111.9	16.4	20.6	111.9	16.8	35.4	111.9	19.6	38.2	111.9
Actuated g/C Ratio	0.22	0.25	1.00	0.15	0.18	1.00	0.15	0.32	1.00	0.18	0.34	1.00
Clearance Time (s)	7.0	7.0		7.0	7.0		7.0	7.0		7.0	7.0	
Vehicle Extension (s)	3.0	3.0		3.0	3.0		3.0	5.0		3.0	5.0	
Lane Grp Cap (vph)	384	901	1583	503	652	1583	515	1120	1583	601	1208	1583
v/s Ratio Prot	c0.15	c0.11		0.06	0.04		0.07	c0.19		c0.10	0.14	
v/s Ratio Perm			c0.26			0.10			0.20			0.04
v/c Ratio	0.71	0.45	0.26	0.43	0.24	0.10	0.44	0.61	0.20	0.56	0.41	0.04
Uniform Delay, d1	40.5	35.1	0.0	43.5	39.0	0.0	43.3	32.5	0.0	42.2	28.2	0.0
Progression Factor	1.00	1.00	1.00	1.00	1.00	1.00	1.00	1.00	1.00	1.00	1.00	1.00
Incremental Delay, d2	5.8	0.4	0.4	0.6	0.2	0.1	0.6	1.5	0.3	1.1	0.5	0.1
Delay (s)	46.3	35.4	0.4	44.1	39.2	0.1	43.9	33.9	0.3	43.3	28.7	0.1
Level of Service	D	D	A	D	D	A	D	C	A	D	C	A
Approach Delay (s)		24.8			29.2			27.2			32.0	
Approach LOS		C			C			C			C	

Intersection Summary			
HCM Average Control Delay	27.9	HCM Level of Service	C
HCM Volume to Capacity ratio	0.58		
Actuated Cycle Length (s)	111.9	Sum of lost time (s)	9.0
Intersection Capacity Utilization	67.2%	ICU Level of Service	C
Analysis Period (min)	15		
c Critical Lane Group			

Movement	EBL	EBR	NBL	NBT	SBT	SBR
Lane Configurations						
Ideal Flow (vphpl)	1900	1900	1900	1900	1900	1900
Total Lost time (s)	4.0			4.0	4.0	
Lane Util. Factor	0.97			0.95	0.95	
Frt	0.95			1.00	0.98	
Flt Protected	0.97			1.00	1.00	
Satd. Flow (prot)	3318			3534	3482	
Flt Permitted	0.97			0.83	1.00	
Satd. Flow (perm)	3318			2926	3482	
Volume (vph)	117	62	48	1600	1326	160
Peak-hour factor, PHF	0.95	0.95	0.95	0.95	0.95	0.95
Adj. Flow (vph)	123	65	51	1684	1396	168
RTOR Reduction (vph)	54	0	0	0	10	0
Lane Group Flow (vph)	134	0	0	1735	1554	0
Turn Type			Perm			
Protected Phases	4			2	6	
Permitted Phases			2			
Actuated Green, G (s)	11.0			61.4	61.4	
Effective Green, g (s)	14.0			64.4	64.4	
Actuated g/C Ratio	0.16			0.75	0.75	
Clearance Time (s)	7.0			7.0	7.0	
Vehicle Extension (s)	4.0			3.0	3.0	
Lane Grp Cap (vph)	538			2181	2595	
v/s Ratio Prot	c0.04				0.45	
v/s Ratio Perm				c0.59		
v/c Ratio	0.25			0.80	0.60	
Uniform Delay, d1	31.6			6.9	5.1	
Progression Factor	1.00			1.00	1.00	
Incremental Delay, d2	0.3			2.1	0.4	
Delay (s)	31.9			9.0	5.4	
Level of Service	C			A	A	
Approach Delay (s)	31.9			9.0	5.4	
Approach LOS	C			A	A	

Intersection Summary			
HCM Average Control Delay	8.6	HCM Level of Service	A
HCM Volume to Capacity ratio	0.70		
Actuated Cycle Length (s)	86.4	Sum of lost time (s)	8.0
Intersection Capacity Utilization	93.9%	ICU Level of Service	F
Analysis Period (min)	15		
c Critical Lane Group			

Movement	EBL	EBT	EBR	WBL	WBT	WBR	NBL	NBT	NBR	SBL	SBT	SBR
Lane Configurations												
Ideal Flow (vphpl)	1900	1900	1900	1900	1900	1900	1900	1900	1900	1900	1900	1900
Total Lost time (s)	4.0	4.0	4.0	3.0	4.0	3.0	4.0	3.0	3.0	3.0	3.0	4.0
Lane Util. Factor	0.97	0.95	1.00	0.97	0.95	1.00	0.97	0.95	1.00	0.97	0.95	1.00
Frt	1.00	1.00	0.85	1.00	1.00	0.85	1.00	1.00	0.85	1.00	1.00	0.85
Flt Protected	0.95	1.00	1.00	0.95	1.00	1.00	0.95	1.00	1.00	0.95	1.00	1.00
Satd. Flow (prot)	3433	3539	1583	3433	3539	1583	3433	3539	1583	3433	3539	1583
Flt Permitted	0.95	1.00	1.00	0.95	1.00	1.00	0.95	1.00	1.00	0.95	1.00	1.00
Satd. Flow (perm)	3433	3539	1583	3433	3539	1583	3433	3539	1583	3433	3539	1583
Volume (vph)	360	318	469	121	468	49	378	86	112	36	178	145
Peak-hour factor, PHF	0.95	0.95	0.95	0.95	0.95	0.95	0.95	0.95	0.95	0.95	0.95	0.95
Adj. Flow (vph)	379	335	494	127	493	52	398	91	118	38	187	153
RTOR Reduction (vph)	0	0	0	0	0	0	0	0	80	0	0	0
Lane Group Flow (vph)	379	335	494	127	493	52	398	91	38	38	187	153
Turn Type	Prot		Free	Prot		Free	Prot		pm+ov	Prot		Free
Protected Phases	1	6		5	2		7	4	5	3	8	
Permitted Phases			Free			Free			4			Free
Actuated Green, G (s)	19.8	68.9	140.0	10.0	59.1	140.0	20.2	28.1	38.1	5.5	13.4	140.0
Effective Green, g (s)	22.8	71.9	140.0	14.0	62.1	140.0	23.2	31.6	45.6	9.5	16.9	140.0
Actuated g/C Ratio	0.16	0.51	1.00	0.10	0.44	1.00	0.17	0.23	0.33	0.07	0.12	1.00
Clearance Time (s)	7.0	7.0		7.0	7.0		7.0	6.5	7.0	7.0	6.5	
Vehicle Extension (s)	2.5	4.0		2.5	4.0		2.5	2.5	2.5	2.5	2.5	
Lane Grp Cap (vph)	559	1818	1583	343	1570	1583	569	799	550	233	427	1583
v/s Ratio Prot	c0.11	0.09		0.04	0.14		c0.12	0.03	0.01	0.01	c0.05	
v/s Ratio Perm			c0.31			0.03			0.02			0.10
v/c Ratio	0.68	0.18	0.31	0.37	0.31	0.03	0.70	0.11	0.07	0.16	0.44	0.10
Uniform Delay, d1	55.1	18.3	0.0	58.9	25.2	0.0	55.1	43.1	32.6	61.5	57.1	0.0
Progression Factor	1.00	1.00	1.00	1.00	1.00	1.00	1.00	1.00	1.00	1.00	1.00	1.00
Incremental Delay, d2	3.0	0.2	0.5	0.5	0.5	0.0	3.5	0.0	0.0	0.2	0.5	0.1
Delay (s)	58.1	18.5	0.5	59.4	25.7	0.0	58.6	43.1	32.6	61.7	57.7	0.1
Level of Service	E	B	A	E	C	A	E	D	C	E	E	A
Approach Delay (s)		23.6			30.1			51.2			34.8	
Approach LOS		C			C			D			C	

Intersection Summary

HCM Average Control Delay	32.4	HCM Level of Service	C
HCM Volume to Capacity ratio	0.46		
Actuated Cycle Length (s)	140.0	Sum of lost time (s)	11.0
Intersection Capacity Utilization	52.2%	ICU Level of Service	A
Analysis Period (min)	15		

c Critical Lane Group

Movement	EBL	EBT	EBR	WBL	WBT	WBR	NBL	NBT	NBR	SBL	SBT	SBR
Lane Configurations												
Ideal Flow (vphpl)	1900	1900	1900	1900	1900	1900	1900	1900	1900	1900	1900	1900
Total Lost time (s)	3.0	3.0	3.0	3.0	3.0	3.0	3.0	3.0	3.0	3.0	3.0	3.0
Lane Util. Factor	0.97	1.00	1.00	1.00	0.95	1.00	0.97	0.95	1.00	1.00	0.95	1.00
Frt	1.00	1.00	0.85	1.00	1.00	0.85	1.00	1.00	0.85	1.00	1.00	0.85
Flt Protected	0.95	1.00	1.00	0.95	1.00	1.00	0.95	1.00	1.00	0.95	1.00	1.00
Satd. Flow (prot)	3433	1863	1583	1770	3539	1583	3433	3539	1583	1770	3539	1583
Flt Permitted	0.95	1.00	1.00	0.95	1.00	1.00	0.95	1.00	1.00	0.95	1.00	1.00
Satd. Flow (perm)	3433	1863	1583	1770	3539	1583	3433	3539	1583	1770	3539	1583
Volume (vph)	72	86	79	190	404	18	161	636	220	4	693	116
Peak-hour factor, PHF	0.95	0.95	0.95	0.95	0.95	0.95	0.95	0.95	0.95	0.95	0.95	0.95
Adj. Flow (vph)	76	91	83	200	425	19	169	669	232	4	729	122
RTOR Reduction (vph)	0	0	72	0	0	15	0	0	115	0	0	72
Lane Group Flow (vph)	76	91	11	200	425	4	169	669	117	4	729	50
Turn Type	Prot		Perm	Prot		Perm	Prot		Perm	Prot		Perm
Protected Phases	7	4		3	8		1	6		5	2	
Permitted Phases			4			8			6			2
Actuated Green, G (s)	7.7	8.8	8.8	17.0	18.1	18.1	11.4	49.1	49.1	1.6	39.3	39.3
Effective Green, g (s)	11.7	13.8	13.8	21.0	23.1	23.1	15.4	53.6	53.6	5.6	43.8	43.8
Actuated g/C Ratio	0.11	0.13	0.13	0.20	0.22	0.22	0.15	0.51	0.51	0.05	0.41	0.41
Clearance Time (s)	7.0	8.0	8.0	7.0	8.0	8.0	7.0	7.5	7.5	7.0	7.5	7.5
Vehicle Extension (s)	3.0	3.0	3.0	3.0	3.0	3.0	3.0	3.0	3.0	3.0	3.0	3.0
Lane Grp Cap (vph)	379	243	206	351	771	345	499	1790	800	94	1462	654
v/s Ratio Prot	0.02	0.05		c0.11	c0.12		c0.05	0.19		0.00	c0.21	
v/s Ratio Perm			0.01			0.00			0.07			0.03
v/c Ratio	0.20	0.37	0.05	0.57	0.55	0.01	0.34	0.37	0.15	0.04	0.50	0.08
Uniform Delay, d1	42.9	42.2	40.4	38.4	36.8	32.5	40.7	16.0	14.0	47.7	23.0	18.8
Progression Factor	1.00	1.00	1.00	1.00	1.00	1.00	1.00	1.00	1.00	1.00	1.00	1.00
Incremental Delay, d2	0.3	1.0	0.1	2.1	0.9	0.0	0.4	0.1	0.1	0.2	0.3	0.1
Delay (s)	43.2	43.1	40.5	40.5	37.7	32.5	41.1	16.1	14.1	47.8	23.3	18.9
Level of Service	D	D	D	D	D	C	D	B	B	D	C	B
Approach Delay (s)		42.3			38.4			19.6			22.7	
Approach LOS		D			D			B			C	

Intersection Summary

HCM Average Control Delay	26.9	HCM Level of Service	C
HCM Volume to Capacity ratio	0.49		
Actuated Cycle Length (s)	106.0	Sum of lost time (s)	9.0
Intersection Capacity Utilization	66.2%	ICU Level of Service	C
Analysis Period (min)	15		

c Critical Lane Group

Movement	EBL	EBR	NBL	NBT	SBT	SBR
Lane Configurations						
Ideal Flow (vphpl)	1900	1900	1900	1900	1900	1900
Total Lost time (s)	3.0	3.0	3.0	3.0	3.0	3.0
Lane Util. Factor	1.00	1.00	1.00	0.95	0.95	1.00
Frt	1.00	0.85	1.00	1.00	1.00	0.85
Flt Protected	0.95	1.00	0.95	1.00	1.00	1.00
Satd. Flow (prot)	1770	1583	1770	3539	3539	1583
Flt Permitted	0.95	1.00	0.23	1.00	1.00	1.00
Satd. Flow (perm)	1770	1583	427	3539	3539	1583
Volume (vph)	97	54	172	1026	782	142
Peak-hour factor, PHF	0.95	0.95	0.95	0.95	0.95	0.95
Adj. Flow (vph)	102	57	181	1080	823	149
RTOR Reduction (vph)	0	46	0	0	0	52
Lane Group Flow (vph)	102	11	181	1080	823	97
Turn Type		Perm	pm+pt			pm+ov
Protected Phases	4		1	6	2	4
Permitted Phases		4	6			2
Actuated Green, G (s)	7.8	7.8	42.3	42.3	26.2	34.0
Effective Green, g (s)	11.8	11.8	45.8	45.8	29.7	41.5
Actuated g/C Ratio	0.19	0.19	0.72	0.72	0.47	0.65
Clearance Time (s)	7.0	7.0	7.0	6.5	6.5	7.0
Vehicle Extension (s)	3.0	3.0	4.0	4.0	4.0	3.0
Lane Grp Cap (vph)	328	294	584	2549	1653	1108
v/s Ratio Prot	c0.06		0.06	c0.31	c0.23	0.02
v/s Ratio Perm		0.01	0.16			0.05
v/c Ratio	0.31	0.04	0.31	0.42	0.50	0.09
Uniform Delay, d1	22.4	21.2	4.9	3.6	11.8	4.1
Progression Factor	1.00	1.00	1.00	1.00	1.00	1.00
Incremental Delay, d2	0.5	0.1	0.4	0.2	0.3	0.0
Delay (s)	22.9	21.3	4.5	3.7	12.1	4.1
Level of Service	C	C	A	A	B	A
Approach Delay (s)	22.3			3.8	10.9	
Approach LOS	C			A	B	

Intersection Summary			
HCM Average Control Delay	7.9	HCM Level of Service	A
HCM Volume to Capacity ratio	0.44		
Actuated Cycle Length (s)	63.6	Sum of lost time (s)	9.0
Intersection Capacity Utilization	46.5%	ICU Level of Service	A
Analysis Period (min)	15		
c Critical Lane Group			

Movement	EBL	EBT	EBR	WBL	WBT	WBR	NBL	NBT	NBR	SBL	SBT	SBR
Lane Configurations												
Ideal Flow (vphpl)	1900	1900	1900	1900	1900	1900	1900	1900	1900	1900	1900	1900
Total Lost time (s)	3.0	3.0	3.0	3.0	3.0	3.0	3.0	3.0	3.0	3.0	3.0	3.0
Lane Util. Factor	0.97	0.91	1.00	0.97	0.91	1.00	1.00	0.95	1.00	0.97	0.95	1.00
Frt	1.00	1.00	0.85	1.00	1.00	0.85	1.00	1.00	0.85	1.00	1.00	0.85
Flt Protected	0.95	1.00	1.00	0.95	1.00	1.00	0.95	1.00	1.00	0.95	1.00	1.00
Satd. Flow (prot)	3433	5085	1583	3433	5085	1583	1770	3539	1583	3433	3539	1583
Flt Permitted	0.95	1.00	1.00	0.95	1.00	1.00	0.95	1.00	1.00	0.95	1.00	1.00
Satd. Flow (perm)	3433	5085	1583	3433	5085	1583	1770	3539	1583	3433	3539	1583
Volume (vph)	226	1577	252	103	536	583	62	227	110	962	535	427
Peak-hour factor, PHF	0.95	0.95	0.95	0.95	0.95	0.95	0.95	0.95	0.95	0.95	0.95	0.95
Adj. Flow (vph)	238	1660	265	108	564	614	65	239	116	1013	563	449
RTOR Reduction (vph)	0	0	0	0	0	0	0	0	3	0	0	56
Lane Group Flow (vph)	238	1660	265	108	564	614	65	239	113	1013	563	393
Turn Type	Prot		Free	Prot		Free	Prot		pm+ov	Prot		pm+ov
Protected Phases	1	6		5	2		3	8	5	7	4	1
Permitted Phases			Free			Free			8			4
Actuated Green, G (s)	13.7	46.6	130.0	8.7	41.6	130.0	4.8	14.2	22.9	33.0	42.4	56.1
Effective Green, g (s)	17.7	50.6	130.0	12.7	45.6	130.0	8.8	17.7	30.4	37.0	45.9	63.6
Actuated g/C Ratio	0.14	0.39	1.00	0.10	0.35	1.00	0.07	0.14	0.23	0.28	0.35	0.49
Clearance Time (s)	7.0	7.0		7.0	7.0		7.0	6.5	7.0	7.0	6.5	7.0
Vehicle Extension (s)	2.0	3.0		2.0	3.0		2.0	2.0	2.0	2.0	2.0	2.0
Lane Grp Cap (vph)	467	1979	1583	335	1784	1583	120	482	407	977	1250	811
v/s Ratio Prot	c0.07	c0.33		0.03	0.11		0.04	0.07	0.03	c0.30	0.16	c0.07
v/s Ratio Perm			0.17			0.39			0.04			0.18
v/c Ratio	0.51	0.84	0.17	0.32	0.32	0.39	0.54	0.50	0.28	1.04	0.45	0.48
Uniform Delay, d1	52.1	36.0	0.0	54.6	30.8	0.0	58.6	52.0	40.8	46.5	32.3	22.2
Progression Factor	1.00	1.00	1.00	0.82	0.79	1.00	1.00	1.00	1.00	1.00	1.00	1.00
Incremental Delay, d2	0.3	4.5	0.2	0.2	0.4	0.7	2.7	0.3	0.1	38.8	0.1	0.2
Delay (s)	52.4	40.5	0.2	44.8	24.7	0.7	61.3	52.3	40.9	85.3	32.4	22.4
Level of Service	D	D	A	D	C	A	E	D	D	F	C	C
Approach Delay (s)		36.8			14.9			50.6			56.6	
Approach LOS		D			B			D			E	

Intersection Summary			
HCM Average Control Delay	39.8	HCM Level of Service	D
HCM Volume to Capacity ratio	0.78		
Actuated Cycle Length (s)	130.0	Sum of lost time (s)	3.0
Intersection Capacity Utilization	81.7%	ICU Level of Service	D
Analysis Period (min)	15		
c Critical Lane Group			

Movement	EBL	EBT	EBR	WBL	WBT	WBR	NBL	NBT	NBR	SBL	SBT	SBR
Lane Configurations												
Ideal Flow (vphpl)	1900	1900	1900	1900	1900	1900	1900	1900	1900	1900	1900	1900
Total Lost time (s)	3.0	3.0	3.0	3.0	3.0	3.0	3.0	3.0	3.0	3.0	3.0	
Lane Util. Factor	1.00	0.91	1.00	1.00	0.91	1.00	1.00	0.95	1.00	1.00	0.95	
Frt	1.00	1.00	0.85	1.00	1.00	0.85	1.00	1.00	0.85	1.00	0.90	
Flt Protected	0.95	1.00	1.00	0.95	1.00	1.00	0.95	1.00	1.00	0.95	1.00	
Satd. Flow (prot)	1770	5085	1583	1770	5085	1583	1770	3539	1583	1770	3189	
Flt Permitted	0.95	1.00	1.00	0.95	1.00	1.00	0.73	1.00	1.00	0.54	1.00	
Satd. Flow (perm)	1770	5085	1583	1770	5085	1583	1354	3539	1583	1015	3189	
Volume (vph)	125	2519	55	263	1063	202	72	63	170	104	14	28
Peak-hour factor, PHF	0.95	0.95	0.95	0.95	0.95	0.95	0.95	0.95	0.95	0.95	0.95	0.95
Adj. Flow (vph)	132	2652	58	277	1119	213	76	66	179	109	15	29
RTOR Reduction (vph)	0	0	26	0	0	54	0	0	0	0	25	0
Lane Group Flow (vph)	132	2652	32	277	1119	159	76	66	179	109	19	0
Turn Type	Prot		pm+ov	Prot		pm+ov	pm+pt		Free	pm+pt		
Protected Phases	1	6	3	5	2	7	3	8		7	4	
Permitted Phases			6			2	8		Free	4		
Actuated Green, G (s)	7.0	61.7	65.7	23.5	77.7	91.7	10.3	6.3	130.0	25.3	16.3	
Effective Green, g (s)	11.0	65.2	71.2	27.0	81.2	97.2	15.8	9.8	130.0	28.8	19.8	
Actuated g/C Ratio	0.08	0.50	0.55	0.21	0.62	0.75	0.12	0.08	1.00	0.22	0.15	
Clearance Time (s)	7.0	6.5	5.0	6.5	6.5	5.0	5.0	6.5		5.0	6.5	
Vehicle Extension (s)	2.0	3.0	2.0	2.0	3.0	2.0	2.0	2.0		2.0	2.0	
Lane Grp Cap (vph)	150	2550	904	368	3176	1220	184	267	1583	318	486	
v/s Ratio Prot	c0.07	c0.52	0.00	c0.16	0.22	0.02	c0.02	0.02		c0.04	0.01	
v/s Ratio Perm			0.02			0.08	0.03		0.11	c0.03		
v/c Ratio	0.88	1.04	0.04	0.75	0.35	0.13	0.41	0.25	0.11	0.34	0.04	
Uniform Delay, d1	58.8	32.4	13.6	48.4	11.7	4.6	52.4	56.6	0.0	42.0	47.0	
Progression Factor	1.12	0.79	0.22	1.00	1.00	1.00	1.00	1.00	1.00	1.00	1.00	
Incremental Delay, d2	23.4	24.5	0.0	7.5	0.3	0.0	0.5	0.2	0.1	0.2	0.2	
Delay (s)	89.2	50.0	2.9	55.9	12.1	4.6	53.0	56.8	0.1	42.2	47.1	
Level of Service	F	D	A	E	B	A	D	E	A	D	D	
Approach Delay (s)		50.9			18.6			24.3			43.7	
Approach LOS		D			B			C			D	

Intersection Summary			
HCM Average Control Delay	38.4	HCM Level of Service	D
HCM Volume to Capacity ratio	0.82		
Actuated Cycle Length (s)	130.0	Sum of lost time (s)	9.0
Intersection Capacity Utilization	85.7%	ICU Level of Service	E
Analysis Period (min)	15		
c Critical Lane Group			

Movement	EBL	EBT	EBR	WBL	WBT	WBR	NBL	NBT	NBR	SBL	SBT	SBR
Lane Configurations												
Ideal Flow (vphpl)	1900	1900	1900	1900	1900	1900	1900	1900	1900	1900	1900	1900
Total Lost time (s)	3.0	3.0	3.0	3.0	3.0	3.0	3.0	3.0	3.0	3.0	3.0	3.0
Lane Util. Factor	0.97	0.86	1.00	0.97	0.86	1.00	0.97	0.95	1.00	0.97	0.95	1.00
Frt	1.00	1.00	0.85	1.00	1.00	0.85	1.00	1.00	0.85	1.00	1.00	0.85
Flt Protected	0.95	1.00	1.00	0.95	1.00	1.00	0.95	1.00	1.00	0.95	1.00	1.00
Satd. Flow (prot)	3433	6408	1583	3433	6408	1583	3433	3539	1583	3433	3539	1583
Flt Permitted	0.95	1.00	1.00	0.95	1.00	1.00	0.95	1.00	1.00	0.95	1.00	1.00
Satd. Flow (perm)	3433	6408	1583	3433	6408	1583	3433	3539	1583	3433	3539	1583
Volume (vph)	925	3385	227	436	2447	314	210	95	91	167	88	378
Peak-hour factor, PHF	0.95	0.95	0.95	0.95	0.95	0.95	0.95	0.95	0.95	0.95	0.95	0.95
Adj. Flow (vph)	974	3563	239	459	2576	331	221	100	96	176	93	398
RTOR Reduction (vph)	0	0	94	0	0	0	0	0	0	0	0	0
Lane Group Flow (vph)	974	3563	145	459	2576	331	221	100	96	176	93	398
Turn Type	Prot		Perm	Prot		Free	Prot		Free	Prot		Free
Protected Phases	1	6		5	2		7	4		3	8	
Permitted Phases			6			Free			Free			Free
Actuated Green, G (s)	27.0	83.7	83.7	20.3	77.0	145.0	6.0	7.0	145.0	6.0	7.0	145.0
Effective Green, g (s)	31.0	87.7	87.7	24.3	81.0	145.0	10.0	11.0	145.0	10.0	11.0	145.0
Actuated g/C Ratio	0.21	0.60	0.60	0.17	0.56	1.00	0.07	0.08	1.00	0.07	0.08	1.00
Clearance Time (s)	7.0	7.0	7.0	7.0	7.0		7.0	7.0		7.0	7.0	
Vehicle Extension (s)	2.0	3.0	3.0	2.0	3.0		3.0	3.0		3.0	3.0	
Lane Grp Cap (vph)	734	3876	957	575	3580	1583	237	268	1583	237	288	1583
v/s Ratio Prot	c0.28	c0.56		0.13	0.40		c0.06	c0.03		0.05	0.03	
v/s Ratio Perm			0.09			0.21			0.08			0.25
v/c Ratio	1.33	0.92	0.15	0.80	0.72	0.21	0.93	0.37	0.06	0.74	0.35	0.25
Uniform Delay, d1	57.0	25.5	12.5	58.0	23.6	0.0	67.2	63.7	0.0	66.2	63.6	0.0
Progression Factor	1.00	1.00	1.00	1.00	1.00	1.00	1.00	1.00	1.00	1.00	1.00	1.00
Incremental Delay, d2	156.5	4.7	0.3	7.1	1.3	0.3	40.1	0.9	0.1	11.8	0.8	0.4
Delay (s)	213.5	30.2	12.8	65.1	24.9	0.3	107.3	64.6	0.1	78.1	64.4	0.4
Level of Service	F	C	B	E	C	A	F	E	A	E	E	A
Approach Delay (s)		66.7			28.0			72.4			29.8	
Approach LOS		E			C			E			C	

Intersection Summary			
HCM Average Control Delay	50.2	HCM Level of Service	D
HCM Volume to Capacity ratio	0.97		
Actuated Cycle Length (s)	145.0	Sum of lost time (s)	9.0
Intersection Capacity Utilization	84.5%	ICU Level of Service	E
Analysis Period (min)	15		
c Critical Lane Group			

Movement	EBL	EBT	EBR	WBL	WBT	WBR	NBL	NBT	NBR	SBL	SBT	SBR
Lane Configurations												
Ideal Flow (vphpl)	1900	1900	1900	1900	1900	1900	1900	1900	1900	1900	1900	1900
Total Lost time (s)		3.0		3.0	3.0			3.0	3.0		3.0	
Lane Util. Factor		0.95		1.00	0.95			1.00	1.00		1.00	
Frt		0.98		1.00	1.00			1.00	0.85		0.91	
Flt Protected		1.00		0.95	1.00			0.95	1.00		0.99	
Satd. Flow (prot)		3454		1770	3536			1776	1583		1676	
Flt Permitted		0.91		0.09	1.00			0.95	1.00		0.99	
Satd. Flow (perm)		3132		175	3536			1776	1583		1676	
Volume (vph)	24	1009	188	218	1238	7	118	3	144	4	3	14
Peak-hour factor, PHF	0.95	0.95	0.95	0.95	0.95	0.95	0.95	0.95	0.95	0.95	0.95	0.95
Adj. Flow (vph)	25	1062	198	229	1303	7	124	3	152	4	3	15
RTOR Reduction (vph)	0	13	0	0	0	0	0	0	0	0	14	0
Lane Group Flow (vph)	0	1272	0	229	1310	0	0	127	152	0	8	0
Turn Type	Perm			pm+pt			Split		pm+ov	Split		
Protected Phases		6		5	2		4	4	5	8	8	
Permitted Phases	6			2					4			
Actuated Green, G (s)		37.2		51.9	51.9			8.4	17.6		2.4	
Effective Green, g (s)		40.2		54.9	54.9			11.4	23.1		5.4	
Actuated g/C Ratio		0.50		0.68	0.68			0.14	0.29		0.07	
Clearance Time (s)		6.0		5.5	6.0			6.0	5.5		6.0	
Vehicle Extension (s)		4.0		2.0	4.0			3.0	2.0		3.0	
Lane Grp Cap (vph)		1560		350	2406			251	453		112	
v/s Ratio Prot				c0.09	0.37			c0.07	0.05		c0.00	
v/s Ratio Perm		c0.41		0.35					0.05			
v/c Ratio		0.82		0.65	0.54			0.51	0.34		0.07	
Uniform Delay, d1		17.1		16.3	6.5			32.0	22.7		35.3	
Progression Factor		1.00		1.00	1.00			1.00	1.00		1.00	
Incremental Delay, d2		3.6		3.3	0.3			1.6	0.2		0.3	
Delay (s)		20.7		19.6	6.9			33.6	22.9		35.6	
Level of Service		C		B	A			C	C		D	
Approach Delay (s)		20.7			8.8			27.8			35.6	
Approach LOS		C			A			C			D	

Intersection Summary			
HCM Average Control Delay	15.6	HCM Level of Service	B
HCM Volume to Capacity ratio	0.68		
Actuated Cycle Length (s)	80.7	Sum of lost time (s)	12.0
Intersection Capacity Utilization	92.4%	ICU Level of Service	F
Analysis Period (min)	15		
c Critical Lane Group			

Movement	EBL	EBT	WBT	WBR	SBL	SBR
Lane Configurations						
Ideal Flow (vphpl)	1900	1900	1900	1900	1900	1900
Total Lost time (s)	3.0	3.0	3.0	3.0	3.0	3.0
Lane Util. Factor	0.97	0.95	0.91	0.91	0.97	1.00
Frt	1.00	1.00	1.00	0.85	1.00	0.85
Flt Protected	0.95	1.00	1.00	1.00	0.95	1.00
Satd. Flow (prot)	3433	3539	3390	1441	3433	1583
Flt Permitted	0.95	1.00	1.00	1.00	0.95	1.00
Satd. Flow (perm)	3433	3539	3390	1441	3433	1583
Volume (vph)	686	458	511	376	298	560
Peak-hour factor, PHF	0.95	0.95	0.95	0.95	0.95	0.95
Adj. Flow (vph)	722	482	538	396	314	589
RTOR Reduction (vph)	0	0	0	25	0	436
Lane Group Flow (vph)	722	482	538	371	314	153
Turn Type	Prot			pm+ov		Perm
Protected Phases	5	2	6	4	4	
Permitted Phases				6		4
Actuated Green, G (s)	20.6	47.4	19.8	35.5	15.7	15.7
Effective Green, g (s)	24.6	51.4	23.8	44.0	20.2	20.2
Actuated g/C Ratio	0.32	0.66	0.31	0.57	0.26	0.26
Clearance Time (s)	7.0	7.0	7.0	7.5	7.5	7.5
Vehicle Extension (s)	2.0	3.0	3.0	3.0	3.0	3.0
Lane Grp Cap (vph)	1088	2344	1040	873	894	412
v/s Ratio Prot	c0.21	0.14	c0.16	c0.11	0.09	
v/s Ratio Perm				0.15		0.10
v/c Ratio	0.66	0.21	0.52	0.43	0.35	0.37
Uniform Delay, d1	22.9	5.1	22.2	9.6	23.4	23.5
Progression Factor	1.00	1.00	1.00	1.00	1.00	1.00
Incremental Delay, d2	1.2	0.0	0.4	0.3	0.2	0.6
Delay (s)	24.1	5.2	22.6	9.9	23.6	24.1
Level of Service	C	A	C	A	C	C
Approach Delay (s)		16.5	17.2		23.9	
Approach LOS		B	B		C	

Intersection Summary			
HCM Average Control Delay	18.9	HCM Level of Service	B
HCM Volume to Capacity ratio	0.53		
Actuated Cycle Length (s)	77.6	Sum of lost time (s)	6.0
Intersection Capacity Utilization	59.5%	ICU Level of Service	B
Analysis Period (min)	15		
c Critical Lane Group			

HCM Signalized Intersection Capacity Analysis
24: Pacific Boulevard & Loudoun County Parkway

Kincora
Total Future 2015

Movement	EBL	EBT	EBR	WBL	WBT	WBR	NBL	NBT	NBR	SBL	SBT	SBR
Lane Configurations												
Ideal Flow (vphpl)	1900	1900	1900	1900	1900	1900	1900	1900	1900	1900	1900	1900
Total Lost time (s)	4.0		4.0	4.0		4.0	4.0	4.0	4.0	4.0	4.0	4.0
Lane Util. Factor	0.97		1.00	1.00		1.00	1.00	0.95	1.00	1.00	0.95	1.00
Frt	1.00		0.85	1.00		0.85	1.00	1.00	0.85	1.00	1.00	0.85
Flt Protected	0.95		1.00	0.95		1.00	0.95	1.00	1.00	0.95	1.00	1.00
Satd. Flow (prot)	3433		1583	1770		1583	1770	3539	1583	1770	3539	1583
Flt Permitted	0.95		1.00	0.95		1.00	0.95	1.00	1.00	0.95	1.00	1.00
Satd. Flow (perm)	3433		1583	1770		1583	1770	3539	1583	1770	3539	1583
Volume (vph)	196	0	167	9	0	190	312	1378	63	641	1141	263
Peak-hour factor, PHF	0.95	0.95	0.95	0.95	0.95	0.95	0.95	0.95	0.95	0.95	0.95	0.95
Adj. Flow (vph)	206	0	176	9	0	200	328	1451	66	675	1201	277
RTOR Reduction (vph)	0	0	0	0	0	0	0	0	25	0	0	100
Lane Group Flow (vph)	206	0	176	9	0	200	328	1451	41	675	1201	177
Turn Type	Prot		Free	Prot		Free	Prot		Perm	Prot		Perm
Protected Phases	7	4		3	8		5	2		1	6	
Permitted Phases			Free			Free			2			6
Actuated Green, G (s)	18.6		125.9	2.8		125.9	26.3	57.8	57.8	30.5	62.0	62.0
Effective Green, g (s)	19.6		125.9	3.8		125.9	29.3	60.8	60.8	33.5	65.0	65.0
Actuated g/C Ratio	0.16		1.00	0.03		1.00	0.23	0.48	0.48	0.27	0.52	0.52
Clearance Time (s)	5.0			5.0			7.0	7.0	7.0	7.0	7.0	7.0
Vehicle Extension (s)	2.0			2.0			2.0	3.0	3.0	2.0	3.0	3.0
Lane Grp Cap (vph)	534		1583	53		1583	412	1709	764	471	1827	817
v/s Ratio Prot	c0.06			0.01			0.19	c0.41		c0.38	0.34	
v/s Ratio Perm			0.11			0.13			0.03			0.11
v/c Ratio	0.39		0.11	0.17		0.13	0.80	0.85	0.05	1.43	0.66	0.22
Uniform Delay, d1	47.7		0.0	59.5		0.0	45.5	28.5	17.3	46.2	22.3	16.6
Progression Factor	1.00		1.00	1.00		1.00	1.00	1.00	1.00	1.00	1.00	1.00
Incremental Delay, d2	0.2		0.1	0.6		0.2	9.6	4.2	0.0	206.8	0.9	0.1
Delay (s)	47.9		0.1	60.1		0.2	55.1	32.7	17.3	253.0	23.2	16.7
Level of Service	D		A	E		A	E	C	B	F	C	B
Approach Delay (s)		25.9			2.7			36.1			94.4	
Approach LOS		C			A			D			F	

Intersection Summary				
HCM Average Control Delay	61.1	HCM Level of Service	E	
HCM Volume to Capacity ratio	0.94			
Actuated Cycle Length (s)	125.9	Sum of lost time (s)	12.0	
Intersection Capacity Utilization	95.9%	ICU Level of Service	F	
Analysis Period (min)	15			

c Critical Lane Group

HCM Unsignalized Intersection Capacity Analysis
25: Pacific Boulevard & Richfield Way

Kincora
Total Future 2015

Movement	EBL	EBT	EBR	WBL	WBT	WBR	NBL	NBT	NBR	SBL	SBT	SBR
Lane Configurations												
Sign Control		Free			Free			Stop			Stop	
Grade		0%			0%			0%			0%	
Volume (veh/h)	0	450	5	0	165	0	5	0	0	0	0	0
Peak Hour Factor	0.92	0.92	0.92	0.92	0.92	0.92	0.92	0.92	0.92	0.92	0.92	0.92
Hourly flow rate (vph)	0	489	5	0	179	0	5	0	0	0	0	0
Pedestrians												
Lane Width (ft)												
Walking Speed (ft/s)												
Percent Blockage												
Right turn flare (veh)												
Median type								None			None	
Median storage veh)												
Upstream signal (ft)												
pX, platoon unblocked												
vC, conflicting volume	179			495			579	668	245	424	674	90
vC1, stage 1 conf vol												
vC2, stage 2 conf vol												
vCu, unblocked vol	179			495			579	668	245	424	674	90
tC, single (s)	4.1			4.1			7.5	6.5	6.9	7.5	6.5	6.9
tC, 2 stage (s)												
tF (s)	2.2			2.2			3.5	4.0	3.3	3.5	4.0	3.3
p0 queue free %	100			100			99	100	100	100	100	100
cM capacity (veh/h)	1394			1065			398	377	756	514	375	950

Direction, Lane #	EB 1	EB 2	EB 3	EB 4	WB 1	WB 2	WB 3	WB 4	NB 1	NB 2	SB 1	SB 2
Volume Total	0	245	245	5	0	90	90	0	5	0	0	0
Volume Left	0	0	0	0	0	0	0	0	5	0	0	0
Volume Right	0	0	0	5	0	0	0	0	0	0	0	0
cSH	1700	1700	1700	1700	1700	1700	1700	1700	398	1700	1700	1700
Volume to Capacity	0.00	0.14	0.14	0.00	0.00	0.05	0.05	0.00	0.01	0.00	0.00	0.00
Queue Length 95th (ft)	0	0	0	0	0	0	0	0	1	0	0	0
Control Delay (s)	0.0	0.0	0.0	0.0	0.0	0.0	0.0	0.0	14.2	0.0	0.0	0.0
Lane LOS									B	A	A	A
Approach Delay (s)	0.0				0.0				14.2		0.0	
Approach LOS									B		A	

Intersection Summary				
Average Delay	0.1			
Intersection Capacity Utilization	22.4%	ICU Level of Service	A	
Analysis Period (min)	15			

Movement	WBL	WBR	NBT	NBR	SBL	SBT
Lane Configurations						
Ideal Flow (vphpl)	1900	1900	1900	1900	1900	1900
Total Lost time (s)	4.0	4.0	4.0		4.0	4.0
Lane Util. Factor	1.00	1.00	1.00		1.00	1.00
Frt	1.00	0.85	0.99		1.00	1.00
Flt Protected	0.95	1.00	1.00		0.95	1.00
Satd. Flow (prot)	1770	1583	1843		1770	1863
Flt Permitted	0.95	1.00	1.00		0.17	1.00
Satd. Flow (perm)	1770	1583	1843		325	1863
Volume (vph)	386	598	659	57	252	337
Peak-hour factor, PHF	0.95	0.95	0.95	0.95	0.95	0.95
Adj. Flow (vph)	406	629	694	60	265	355
RTOR Reduction (vph)	0	194	3	0	0	0
Lane Group Flow (vph)	406	435	751	0	265	355
Turn Type		Perm			Perm	
Protected Phases	8		2			6
Permitted Phases		8			6	
Actuated Green, G (s)	36.1	36.1	51.8		51.8	51.8
Effective Green, g (s)	37.1	37.1	52.8		52.8	52.8
Actuated g/C Ratio	0.38	0.38	0.54		0.54	0.54
Clearance Time (s)	5.0	5.0	5.0		5.0	5.0
Vehicle Extension (s)	2.0	2.0	2.0		2.0	2.0
Lane Grp Cap (vph)	671	600	994		175	1005
v/s Ratio Prot	0.23		0.41			0.19
v/s Ratio Perm		c0.27			c0.82	
v/c Ratio	0.61	0.73	0.76		1.51	0.35
Uniform Delay, d1	24.5	26.0	17.5		22.6	12.8
Progression Factor	1.00	1.00	1.00		1.00	1.00
Incremental Delay, d2	1.1	3.7	2.9		258.5	0.1
Delay (s)	25.6	29.7	20.5		281.1	12.9
Level of Service	C	C	C		F	B
Approach Delay (s)	28.1		20.5			127.5
Approach LOS	C		C			F

Intersection Summary			
HCM Average Control Delay	51.3	HCM Level of Service	D
HCM Volume to Capacity ratio	1.19		
Actuated Cycle Length (s)	97.9	Sum of lost time (s)	8.0
Intersection Capacity Utilization	83.5%	ICU Level of Service	E
Analysis Period (min)	15		

c Critical Lane Group

Movement	WBL	WBR	NBT	NBR	SBL	SBT
Lane Configurations						
Sign Control	Stop		Free			Free
Grade	0%		0%			0%
Volume (veh/h)	0	37	679	178	0	723
Peak Hour Factor	0.95	0.95	0.95	0.95	0.95	0.95
Hourly flow rate (vph)	0	39	715	187	0	761
Pedestrians						
Lane Width (ft)						
Walking Speed (ft/s)						
Percent Blockage						
Right turn flare (veh)						
Median type	None					
Median storage veh)						
Upstream signal (ft)						850
pX, platoon unblocked	0.91					
vC, conflicting volume	1569	808			902	
vC1, stage 1 conf vol						
vC2, stage 2 conf vol						
vCu, unblocked vol	1625	808			902	
tC, single (s)	6.4	6.2			4.1	
tC, 2 stage (s)						
tF (s)	3.5	3.3			2.2	
p0 queue free %	100	90			100	
cM capacity (veh/h)	103	381			754	

Direction, Lane #	WB 1	NB 1	SB 1
Volume Total	39	902	761
Volume Left	0	0	0
Volume Right	39	187	0
cSH	381	1700	1700
Volume to Capacity	0.10	0.53	0.45
Queue Length 95th (ft)	8	0	0
Control Delay (s)	15.5	0.0	0.0
Lane LOS	C		
Approach Delay (s)	15.5	0.0	0.0
Approach LOS	C		

Intersection Summary			
Average Delay	0.4		
Intersection Capacity Utilization	56.6%	ICU Level of Service	B
Analysis Period (min)	15		

Movement	WBL	WBR	NBT	NBR	SBL	SBT
Lane Configurations						
Sign Control	Stop		Free			Free
Grade	0%		0%			0%
Volume (veh/h)	33	22	835	17	25	598
Peak Hour Factor	0.95	0.95	0.95	0.95	0.95	0.95
Hourly flow rate (vph)	35	23	879	18	26	629
Pedestrians						
Lane Width (ft)						
Walking Speed (ft/s)						
Percent Blockage						
Right turn flare (veh)						
Median type	None					
Median storage veh)						
Upstream signal (ft)						
pX, platoon unblocked						
vC, conflicting volume	1570	888			897	
vC1, stage 1 conf vol						
vC2, stage 2 conf vol						
vCu, unblocked vol	1570	888			897	
tC, single (s)	6.4	6.2			4.1	
tC, 2 stage (s)						
tF (s)	3.5	3.3			2.2	
p0 queue free %	70	93			97	
cM capacity (veh/h)	118	343			757	

Direction, Lane #	WB 1	NB 1	SB 1
Volume Total	58	897	656
Volume Left	35	0	26
Volume Right	23	18	0
cSH	159	1700	757
Volume to Capacity	0.36	0.53	0.03
Queue Length 95th (ft)	38	0	3
Control Delay (s)	39.9	0.0	0.9
Lane LOS	E		A
Approach Delay (s)	39.9	0.0	0.9
Approach LOS	E		

Intersection Summary			
Average Delay	1.8		
Intersection Capacity Utilization	61.8%	ICU Level of Service	B
Analysis Period (min)	15		

Movement	WBL	WBR	NBT	NBR	SBL	SBT
Lane Configurations						
Sign Control	Stop		Free			Free
Grade	0%		0%			0%
Volume (veh/h)	0	4	1236	21	0	588
Peak Hour Factor	0.95	0.95	0.95	0.95	0.95	0.95
Hourly flow rate (vph)	0	4	1301	22	0	619
Pedestrians						
Lane Width (ft)						
Walking Speed (ft/s)						
Percent Blockage						
Right turn flare (veh)						
Median type	None					
Median storage veh)						
Upstream signal (ft)			844			
pX, platoon unblocked	0.66	0.66			0.66	
vC, conflicting volume	1931	1312			1323	
vC1, stage 1 conf vol						
vC2, stage 2 conf vol						
vCu, unblocked vol	2410	1473			1489	
tC, single (s)	6.4	6.2			4.1	
tC, 2 stage (s)						
tF (s)	3.5	3.3			2.2	
p0 queue free %	100	96			100	
cM capacity (veh/h)	24	103			298	

Direction, Lane #	WB 1	NB 1	SB 1
Volume Total	4	1323	619
Volume Left	0	0	0
Volume Right	4	22	0
cSH	103	1700	1700
Volume to Capacity	0.04	0.78	0.36
Queue Length 95th (ft)	3	0	0
Control Delay (s)	41.5	0.0	0.0
Lane LOS	E		
Approach Delay (s)	41.5	0.0	0.0
Approach LOS	E		

Intersection Summary			
Average Delay	0.1		
Intersection Capacity Utilization	76.3%	ICU Level of Service	D
Analysis Period (min)	15		

Movement	WBL	WBR	NBT	NBR	SBL	SBT
Lane Configurations						
Sign Control	Stop		Free			Free
Grade	0%		0%			0%
Volume (veh/h)	0	4	1218	21	0	583
Peak Hour Factor	0.95	0.95	0.95	0.95	0.95	0.95
Hourly flow rate (vph)	0	4	1282	22	0	619
Pedestrians						
Lane Width (ft)						
Walking Speed (ft/s)						
Percent Blockage						
Right turn flare (veh)						
Median type	None					
Median storage veh)						
Upstream signal (ft)						
pX, platoon unblocked						
vC, conflicting volume	1912	1293			1304	
vC1, stage 1 conf vol						
vC2, stage 2 conf vol						
vCu, unblocked vol	1912	1293			1304	
tC, single (s)	6.4	6.2			4.1	
tC, 2 stage (s)						
tF (s)	3.5	3.3			2.2	
p0 queue free %	100	98			100	
cM capacity (veh/h)	75	199			531	

Direction, Lane #	WB 1	NB 1	SB 1
Volume Total	4	1304	619
Volume Left	0	0	0
Volume Right	4	22	0
cSH	199	1700	1700
Volume to Capacity	0.02	0.77	0.36
Queue Length 95th (ft)	2	0	0
Control Delay (s)	23.5	0.0	0.0
Lane LOS	C		
Approach Delay (s)	23.5	0.0	0.0
Approach LOS	C		

Intersection Summary			
Average Delay	0.1		
Intersection Capacity Utilization	75.4%	ICU Level of Service	D
Analysis Period (min)	15		

Movement	EBL	EBT	EBR	WBL	WBT	WBR	NBL	NBT	NBR	SBL	SBT	SBR
Lane Configurations												
Sign Control		Stop			Stop			Free			Free	
Grade		0%			0%			0%			0%	
Volume (veh/h)	0	0	48	0	0	4	0	1214	8	0	540	149
Peak Hour Factor	0.95	0.95	0.95	0.95	0.95	0.95	0.95	0.95	0.95	0.95	0.95	0.95
Hourly flow rate (vph)	0	0	51	0	0	4	0	1278	8	0	568	157
Pedestrians												
Lane Width (ft)												
Walking Speed (ft/s)												
Percent Blockage												
Right turn flare (veh)												
Median type		None			None							
Median storage veh)												
Upstream signal (ft)												
pX, platoon unblocked												
vC, conflicting volume	1933	1933	647	1979	2007	1282	725			1286		
vC1, stage 1 conf vol												
vC2, stage 2 conf vol												
vCu, unblocked vol	1933	1933	647	1979	2007	1282	725			1286		
tC, single (s)	7.1	6.5	6.2	7.1	6.5	6.2	4.1			4.1		
tC, 2 stage (s)												
tF (s)	3.5	4.0	3.3	3.5	4.0	3.3	2.2			2.2		
p0 queue free %	100	100	89	100	100	98	100			100		
cM capacity (veh/h)	49	66	471	41	59	202	878			539		

Direction, Lane #	EB 1	WB 1	NB 1	SB 1
Volume Total	51	4	1286	725
Volume Left	0	0	0	0
Volume Right	51	4	8	157
cSH	471	202	1700	1700
Volume to Capacity	0.11	0.02	0.76	0.43
Queue Length 95th (ft)	9	2	0	0
Control Delay (s)	13.6	23.2	0.0	0.0
Lane LOS	B	C		
Approach Delay (s)	13.6	23.2	0.0	0.0
Approach LOS	B	C		

Intersection Summary			
Average Delay	0.4		
Intersection Capacity Utilization	74.4%	ICU Level of Service	D
Analysis Period (min)	15		

Movement	EBL	EBR	NBL	NBT	SBT	SBR
Lane Configurations						
Sign Control	Stop			Free	Free	
Grade	0%			0%	0%	
Volume (veh/h)	0	52	0	1217	638	157
Peak Hour Factor	0.95	0.95	0.95	0.95	0.95	0.95
Hourly flow rate (vph)	0	55	0	1281	672	165
Pedestrians						
Lane Width (ft)						
Walking Speed (ft/s)						
Percent Blockage						
Right turn flare (veh)						
Median type	None					
Median storage veh)						
Upstream signal (ft)						
pX, platoon unblocked						
vC, conflicting volume	2035	754	837			
vC1, stage 1 conf vol						
vC2, stage 2 conf vol						
vCu, unblocked vol	2035	754	837			
tC, single (s)	6.4	6.2	4.1			
tC, 2 stage (s)						
tF (s)	3.5	3.3	2.2			
p0 queue free %	100	87	100			
cM capacity (veh/h)	63	409	797			

Direction, Lane #	EB 1	NB 1	SB 1
Volume Total	55	1281	837
Volume Left	0	0	0
Volume Right	55	0	165
cSH	409	1700	1700
Volume to Capacity	0.13	0.75	0.49
Queue Length 95th (ft)	11	0	0
Control Delay (s)	15.2	0.0	0.0
Lane LOS	C		
Approach Delay (s)	15.2	0.0	0.0
Approach LOS	C		

Intersection Summary			
Average Delay	0.4		
Intersection Capacity Utilization	67.4%	ICU Level of Service	C
Analysis Period (min)	15		

Movement	EBL	EBR	NBL	NBT	SBT	SBR
Lane Configurations						
Sign Control	Stop			Free	Free	
Grade	0%			0%	0%	
Volume (veh/h)	26	77	285	932	718	17
Peak Hour Factor	0.95	0.95	0.95	0.95	0.95	0.95
Hourly flow rate (vph)	27	81	300	981	756	18
Pedestrians						
Lane Width (ft)						
Walking Speed (ft/s)						
Percent Blockage						
Right turn flare (veh)						
Median type	None					
Median storage veh)						
Upstream signal (ft)						
pX, platoon unblocked						
vC, conflicting volume	2346	765	774			
vC1, stage 1 conf vol						
vC2, stage 2 conf vol						
vCu, unblocked vol	2346	765	774			
tC, single (s)	6.4	6.2	4.1			
tC, 2 stage (s)						
tF (s)	3.5	3.3	2.2			
p0 queue free %	0	80	64			
cM capacity (veh/h)	26	403	842			

Direction, Lane #	EB 1	NB 1	SB 1
Volume Total	108	1281	774
Volume Left	27	300	0
Volume Right	81	0	18
cSH	85	842	1700
Volume to Capacity	1.27	0.36	0.46
Queue Length 95th (ft)	199	41	0
Control Delay (s)	274.5	10.2	0.0
Lane LOS	F	B	
Approach Delay (s)	274.5	10.2	0.0
Approach LOS	F		

Intersection Summary			
Average Delay	19.8		
Intersection Capacity Utilization	119.8%	ICU Level of Service	H
Analysis Period (min)	15		

Movement	EBL	EBR	NBL	NBT	SBT	SBR
Lane Configurations						
Sign Control	Stop			Free	Free	
Grade	0%			0%	0%	
Volume (veh/h)	40	138	298	660	597	23
Peak Hour Factor	0.95	0.95	0.95	0.95	0.95	0.95
Hourly flow rate (vph)	42	145	314	695	628	24
Pedestrians						
Lane Width (ft)						
Walking Speed (ft/s)						
Percent Blockage						
Right turn flare (veh)						
Median type	None					
Median storage veh)						
Upstream signal (ft)						
pX, platoon unblocked						
vC, conflicting volume	1963	641	653			
vC1, stage 1 conf vol						
vC2, stage 2 conf vol						
vCu, unblocked vol	1963	641	653			
tC, single (s)	6.4	6.2	4.1			
tC, 2 stage (s)						
tF (s)	3.5	3.3	2.2			
p0 queue free %	9	69	66			
cM capacity (veh/h)	46	475	934			

Direction, Lane #	EB 1	NB 1	SB 1
Volume Total	187	1008	653
Volume Left	42	314	0
Volume Right	145	0	24
cSH	154	934	1700
Volume to Capacity	1.22	0.34	0.38
Queue Length 95th (ft)	269	37	0
Control Delay (s)	201.0	7.6	0.0
Lane LOS	F	A	
Approach Delay (s)	201.0	7.6	0.0
Approach LOS	F		

Intersection Summary			
Average Delay	24.5		
Intersection Capacity Utilization	104.8%	ICU Level of Service	G
Analysis Period (min)	15		

Movement	EBL	EBR	NBL	NBT	SBT	SBR
Lane Configurations						
Sign Control	Stop			Free	Free	
Grade	0%			0%	0%	
Volume (veh/h)	34	138	298	403	482	19
Peak Hour Factor	0.95	0.95	0.95	0.95	0.95	0.95
Hourly flow rate (vph)	36	145	314	424	507	20
Pedestrians						
Lane Width (ft)						
Walking Speed (ft/s)						
Percent Blockage						
Right turn flare (veh)						
Median type	None					
Median storage veh)						
Upstream signal (ft)						
pX, platoon unblocked						
vC, conflicting volume	1569	517	527			
vC1, stage 1 conf vol						
vC2, stage 2 conf vol						
vCu, unblocked vol	1569	517	527			
tC, single (s)	6.4	6.2	4.1			
tC, 2 stage (s)						
tF (s)	3.5	3.3	2.2			
p0 queue free %	58	74	70			
cM capacity (veh/h)	85	558	1040			

Direction, Lane #	EB 1	NB 1	SB 1
Volume Total	181	738	527
Volume Left	36	314	0
Volume Right	145	0	20
cSH	266	1040	1700
Volume to Capacity	0.68	0.30	0.31
Queue Length 95th (ft)	112	32	0
Control Delay (s)	43.2	6.5	0.0
Lane LOS	E	A	
Approach Delay (s)	43.2	6.5	0.0
Approach LOS	E		

Intersection Summary			
Average Delay	8.7		
Intersection Capacity Utilization	84.6%	ICU Level of Service	E
Analysis Period (min)	15		

Movement	EBL	EBT	WBT	WBR	SWL	SWR
Lane Configurations		↑↑	↑↑			↱↱
Sign Control		Free	Free		Stop	
Grade		0%	0%		0%	
Volume (veh/h)	0	356	548	0	0	436
Peak Hour Factor	0.95	0.95	0.95	0.95	0.95	0.95
Hourly flow rate (vph)	0	375	577	0	0	459
Pedestrians						
Lane Width (ft)						
Walking Speed (ft/s)						
Percent Blockage						
Right turn flare (veh)						
Median type					None	
Median storage veh)						
Upstream signal (ft)		411				
pX, platoon unblocked						
vC, conflicting volume	577				764	288
vC1, stage 1 conf vol						
vC2, stage 2 conf vol						
vCu, unblocked vol	577				764	288
tC, single (s)	4.1				6.8	6.9
tC, 2 stage (s)						
tF (s)	2.2				3.5	3.3
p0 queue free %	100				100	35
cM capacity (veh/h)	993				340	708

Direction, Lane #	EB 1	EB 2	WB 1	WB 2	SW 1	SW 2
Volume Total	187	187	288	288	229	229
Volume Left	0	0	0	0	0	0
Volume Right	0	0	0	0	229	229
cSH	1700	1700	1700	1700	708	708
Volume to Capacity	0.11	0.11	0.17	0.17	0.32	0.32
Queue Length 95th (ft)	0	0	0	0	35	35
Control Delay (s)	0.0	0.0	0.0	0.0	12.5	12.5
Lane LOS					B	B
Approach Delay (s)	0.0		0.0		12.5	
Approach LOS					B	

Intersection Summary			
Average Delay	4.1		
Intersection Capacity Utilization	37.1%	ICU Level of Service	A
Analysis Period (min)	15		

Movement	EBL	EBR	NBL	NBT	SBT	SBR
Lane Configurations	↰			↑	↑	
Sign Control	Stop			Free	Free	
Grade	0%			0%	0%	
Volume (veh/h)	34	136	308	130	364	87
Peak Hour Factor	0.95	0.95	0.95	0.95	0.95	0.95
Hourly flow rate (vph)	36	143	324	137	383	92
Pedestrians						
Lane Width (ft)						
Walking Speed (ft/s)						
Percent Blockage						
Right turn flare (veh)						
Median type	None					
Median storage veh)						
Upstream signal (ft)						
pX, platoon unblocked						
vC, conflicting volume	1214	429	475			
vC1, stage 1 conf vol						
vC2, stage 2 conf vol						
vCu, unblocked vol	1214	429	475			
tC, single (s)	6.4	6.2	4.1			
tC, 2 stage (s)						
tF (s)	3.5	3.3	2.2			
p0 queue free %	75	77	70			
cM capacity (veh/h)	141	626	1087			

Direction, Lane #	EB 1	NB 1	SB 1
Volume Total	179	461	475
Volume Left	36	324	0
Volume Right	143	0	92
cSH	370	1087	1700
Volume to Capacity	0.48	0.30	0.28
Queue Length 95th (ft)	63	31	0
Control Delay (s)	23.5	7.8	0.0
Lane LOS	C	A	
Approach Delay (s)	23.5	7.8	0.0
Approach LOS	C		

Intersection Summary			
Average Delay	7.0		
Intersection Capacity Utilization	68.6%	ICU Level of Service	C
Analysis Period (min)	15		

HCM Signalized Intersection Capacity Analysis
5: Route 7 & Countryside Blvd.

Kincora
Total Future 2015

Movement	EBL	EBT	EBR	WBL	WBT	WBR	NBL	NBT	NBR	SBL	SBT	SBR
Lane Configurations												
Ideal Flow (vphpl)	1900	1900	1900	1900	1900	1900	1900	1900	1900	1900	1900	1900
Total Lost time (s)	3.0	3.0	3.0	3.0	3.0	3.0	3.0	3.0	3.0	3.0	3.0	3.0
Lane Util. Factor	0.97	0.86	1.00	0.97	0.86	1.00	0.97	0.95	1.00	0.97	0.95	1.00
Frt	1.00	1.00	0.85	1.00	1.00	0.85	1.00	1.00	0.85	1.00	1.00	0.85
Flt Protected	0.95	1.00	1.00	0.95	1.00	1.00	0.95	1.00	1.00	0.95	1.00	1.00
Satd. Flow (prot)	3433	6408	1583	3433	6408	1583	3433	3539	1583	3433	3539	1583
Flt Permitted	0.95	1.00	1.00	0.95	1.00	1.00	0.95	1.00	1.00	0.95	1.00	1.00
Satd. Flow (perm)	3433	6408	1583	3433	6408	1583	3433	3539	1583	3433	3539	1583
Volume (vph)	503	2574	168	648	2633	214	257	148	398	186	163	311
Peak-hour factor, PHF	0.95	0.95	0.95	0.95	0.95	0.95	0.95	0.95	0.95	0.95	0.95	0.95
Adj. Flow (vph)	529	2709	177	682	2772	225	271	156	419	196	172	327
RTOR Reduction (vph)	0	0	0	0	0	47	0	0	0	0	0	2
Lane Group Flow (vph)	529	2709	177	682	2772	178	271	156	419	196	172	325
Turn Type	Prot		Free	Prot		pm+ov	Prot		Free	Prot		pm+ov
Protected Phases	1	6		5	2	3	7	4		3	8	1
Permitted Phases			Free			2			Free			8
Actuated Green, G (s)	27.2	64.7	150.0	34.2	71.7	83.6	10.0	11.2	150.0	11.9	13.1	40.3
Effective Green, g (s)	31.2	68.7	150.0	38.2	75.7	91.6	14.0	15.2	150.0	15.9	17.1	48.3
Actuated g/C Ratio	0.21	0.46	1.00	0.25	0.50	0.61	0.09	0.10	1.00	0.11	0.11	0.32
Clearance Time (s)	7.0	7.0		7.0	7.0	7.0	7.0	7.0		7.0	7.0	7.0
Vehicle Extension (s)	2.0	2.0		3.0	2.0	2.0	2.0	2.0		2.0	2.0	2.0
Lane Grp Cap (vph)	714	2935	1583	874	3234	998	320	359	1583	364	403	541
v/s Ratio Prot	0.15	c0.42		c0.20	0.43	0.02	c0.08	0.04		0.06	0.05	c0.12
v/s Ratio Perm			0.11			0.09			c0.26			0.08
v/c Ratio	0.74	0.92	0.11	0.78	0.86	0.18	0.85	0.43	0.26	0.54	0.43	0.60
Uniform Delay, d1	55.6	38.2	0.0	52.0	32.4	12.8	66.9	63.4	0.0	63.6	61.9	42.7
Progression Factor	1.00	1.00	1.00	1.00	1.00	1.00	1.00	1.00	1.00	1.00	1.00	1.00
Incremental Delay, d2	3.6	6.2	0.1	4.6	3.2	0.0	17.6	0.3	0.4	0.8	0.3	1.3
Delay (s)	59.3	44.4	0.1	56.6	35.6	12.8	84.6	63.7	0.4	64.3	62.2	44.0
Level of Service	E	D	A	E	D	B	F	E	A	E	E	D
Approach Delay (s)		44.4			38.1			39.0			54.2	
Approach LOS		D			D			D			D	

Intersection Summary			
HCM Average Control Delay	42.0	HCM Level of Service	D
HCM Volume to Capacity ratio	0.82		
Actuated Cycle Length (s)	150.0	Sum of lost time (s)	9.0
Intersection Capacity Utilization	81.5%	ICU Level of Service	D
Analysis Period (min)	15		

c Critical Lane Group

HCM Signalized Intersection Capacity Analysis
6: Route 7 & Palisade Parkway

Kincora
Total Future 2015

Movement	EBL	EBT	EBR	WBL	WBT	WBR	NBL	NBT	NBR	SBL	SBT	SBR
Lane Configurations												
Ideal Flow (vphpl)	1900	1900	1900	1900	1900	1900	1900	1900	1900	1900	1900	1900
Total Lost time (s)	3.0	3.0	3.0	3.0	3.0	3.0	3.0	3.0	3.0	3.0	3.0	3.0
Lane Util. Factor	0.97	0.86	1.00	1.00	0.86	1.00	0.97	1.00	1.00	0.97	1.00	1.00
Frt	1.00	1.00	0.85	1.00	1.00	0.85	1.00	1.00	0.85	1.00	1.00	0.85
Flt Protected	0.95	1.00	1.00	0.95	1.00	1.00	0.95	1.00	1.00	0.95	1.00	1.00
Satd. Flow (prot)	3433	6408	1583	1770	6408	1583	3433	1863	1583	3433	1883	1583
Flt Permitted	0.95	1.00	1.00	0.95	1.00	1.00	0.95	1.00	1.00	0.95	1.00	1.00
Satd. Flow (perm)	3433	6408	1583	1770	6408	1583	3433	1863	1583	3433	1863	1583
Volume (vph)	263	2740	25	74	2833	161	391	97	234	225	77	234
Peak-hour factor, PHF	0.95	0.95	0.95	0.95	0.95	0.95	0.95	0.95	0.95	0.95	0.95	0.95
Adj. Flow (vph)	277	2884	26	78	2982	169	412	102	246	237	81	246
RTOR Reduction (vph)	0	0	0	0	0	0	0	0	8	0	0	5
Lane Group Flow (vph)	277	2884	26	78	2982	189	412	102	238	237	81	241
Turn Type	Prot		Free	Prot		Free	Prot		pm+ov	Prot		pm+ov
Protected Phases	1	6		5	2		7	4	5	3	8	1
Permitted Phases			Free			Free			4			8
Actuated Green, G (s)	11.7	60.2	120.0	9.3	57.8	120.0	17.7	12.5	21.8	10.0	4.8	16.5
Effective Green, g (s)	15.7	64.2	120.0	13.3	61.8	120.0	21.7	16.5	29.8	14.0	8.8	24.5
Actuated g/C Ratio	0.13	0.54	1.00	0.11	0.51	1.00	0.18	0.14	0.25	0.12	0.07	0.20
Clearance Time (s)	7.0	7.0		7.0	7.0		7.0	7.0	7.0	7.0	7.0	7.0
Vehicle Extension (s)	2.0	4.0		2.0	4.0		3.0	3.0	2.0	3.0	3.0	2.0
Lane Grp Cap (vph)	449	3428	1583	196	3300	1583	621	256	433	401	137	363
v/s Ratio Prot	0.08	0.45		0.04	c0.47		c0.12	0.05	c0.06	0.07	0.04	c0.09
v/s Ratio Perm			0.02			c0.11			0.09			0.07
v/c Ratio	0.62	0.84	0.02	0.40	0.90	0.11	0.66	0.40	0.55	0.59	0.59	0.66
Uniform Delay, d1	49.3	23.6	0.0	49.6	26.4	0.0	45.8	47.2	39.3	50.3	53.9	44.0
Progression Factor	1.00	1.00	1.00	1.00	1.00	1.00	1.00	1.00	1.00	1.00	1.00	1.00
Incremental Delay, d2	1.8	2.7	0.0	0.5	4.6	0.1	2.7	1.0	0.8	2.3	6.7	3.5
Delay (s)	51.1	26.3	0.0	50.1	31.0	0.1	48.4	48.2	40.0	52.6	60.5	47.5
Level of Service	D	C	A	D	C	A	D	D	D	D	E	D
Approach Delay (s)		28.2			29.9			45.7			51.5	
Approach LOS		C			C			D			D	

Intersection Summary			
HCM Average Control Delay	32.3	HCM Level of Service	C
HCM Volume to Capacity ratio	0.77		
Actuated Cycle Length (s)	120.0	Sum of lost time (s)	6.0
Intersection Capacity Utilization	76.7%	ICU Level of Service	D
Analysis Period (min)	15		

c Critical Lane Group

Movement	WBL	WBR	NBT	NBR	SBL	SBT
Lane Configurations						
Ideal Flow (vphpl)	1900	1900	1900	1900	1900	1900
Total Lost time (s)	3.0	3.0	3.0		3.0	3.0
Lane Util. Factor	1.00	1.00	0.95		1.00	0.95
Frt	1.00	0.85	0.98		1.00	1.00
Flt Protected	0.95	1.00	1.00		0.95	1.00
Satd. Flow (prot)	1770	1583	3459		1770	3539
Flt Permitted	0.95	1.00	1.00		0.21	1.00
Satd. Flow (perm)	1770	1583	3459		395	3539
Volume (vph)	112	262	656	117	250	571
Peak-hour factor, PHF	0.95	0.95	0.95	0.95	0.95	0.95
Adj. Flow (vph)	118	276	691	123	263	601
RTOR Reduction (vph)	0	100	13	0	0	0
Lane Group Flow (vph)	118	176	801	0	263	601
Turn Type		prm+ov			pm+pt	
Protected Phases	4	1	2		1	6
Permitted Phases		4			6	
Actuated Green, G (s)	6.9	15.5	18.9		34.5	34.5
Effective Green, g (s)	10.9	23.5	23.4		39.0	39.0
Actuated g/C Ratio	0.19	0.42	0.42		0.70	0.70
Clearance Time (s)	7.0	7.0	7.5		7.0	7.5
Vehicle Extension (s)	2.0	2.0	2.0		2.0	2.0
Lane Grp Cap (vph)	345	750	1448		586	2469
v/s Ratio Prot	c0.07	0.05	c0.23		c0.10	0.17
v/s Ratio Perm		0.06			0.21	
v/c Ratio	0.34	0.24	0.55		0.45	0.24
Uniform Delay, d1	19.4	10.4	12.3		4.6	3.1
Progression Factor	1.00	1.00	1.00		1.00	1.00
Incremental Delay, d2	0.2	0.1	0.3		0.2	0.0
Delay (s)	19.6	10.5	12.6		4.8	3.1
Level of Service	B	B	B		A	A
Approach Delay (s)	13.2		12.6			3.6
Approach LOS	B		B			A

Intersection Summary			
HCM Average Control Delay	8.9	HCM Level of Service	A
HCM Volume to Capacity ratio	0.48		
Actuated Cycle Length (s)	55.9	Sum of lost time (s)	9.0
Intersection Capacity Utilization	51.9%	ICU Level of Service	A
Analysis Period (min)	15		

c Critical Lane Group

Movement	EBL	EBT	EBR	WBL	WBT	WBR	NBL	NBT	NBR	SBL	SBT	SBR
Lane Configurations												
Ideal Flow (vphpl)	1900	1900	1900	1900	1900	1900	1900	1900	1900	1900	1900	1900
Total Lost time (s)		4.0	4.0		4.0	4.0	4.0	4.0	4.0	4.0	4.0	4.0
Lane Util. Factor		1.00	1.00		1.00	1.00	1.00	0.95	1.00	1.00	0.95	1.00
Frt		1.00	0.85		1.00	0.85	1.00	1.00	0.85	1.00	1.00	0.85
Flt Protected		0.96	1.00		0.95	1.00	0.95	1.00	1.00	0.95	1.00	1.00
Satd. Flow (prot)		1779	1583		1770	1583	1770	3539	1583	1770	3539	1583
Flt Permitted		0.71	1.00		0.74	1.00	0.39	1.00	1.00	0.33	1.00	1.00
Satd. Flow (perm)		1323	1583		1370	1583	723	3539	1583	814	3539	1583
Volume (vph)	29	2	82	37	0	30	148	794	83	29	576	72
Peak-hour factor, PHF	0.95	0.95	0.95	0.95	0.95	0.95	0.95	0.95	0.95	0.95	0.95	0.95
Adj. Flow (vph)	31	2	86	39	0	32	156	836	87	31	606	76
RTOR Reduction (vph)	0	0	70	0	0	27	0	0	25	0	0	24
Lane Group Flow (vph)	0	33	16	0	39	5	156	836	62	31	606	52
Turn Type	Perm		pm+ov	Perm		pm+ov	pm+pt		Perm	pm+pt		Perm
Protected Phases		4	5		8	1	5	2		1	6	
Permitted Phases	4		4	8		8	2		2	6		6
Actuated Green, G (s)		4.9	10.9		4.9	7.9	67.1	61.1	61.1	61.1	58.1	58.1
Effective Green, g (s)		7.9	16.9		7.9	13.9	73.1	64.1	64.1	67.1	61.1	61.1
Actuated g/C Ratio		0.09	0.19		0.09	0.15	0.81	0.71	0.71	0.75	0.68	0.68
Clearance Time (s)		7.0	7.0		7.0	7.0	7.0	7.0	7.0	7.0	7.0	7.0
Vehicle Extension (s)		2.0	2.0		2.0	2.0	2.0	2.0	2.0	2.0	2.0	2.0
Lane Grp Cap (vph)		116	368		120	315	692	2521	1127	535	2403	1075
v/s Ratio Prot			0.00			0.00	c0.02	c0.24		0.00	0.17	
v/s Ratio Perm		0.02	0.01		c0.03	0.00	0.18		0.04	0.04		0.03
v/c Ratio		0.28	0.04		0.33	0.02	0.23	0.33	0.05	0.06	0.25	0.05
Uniform Delay, d1		38.4	29.9		38.5	32.3	1.9	4.9	3.9	3.0	5.6	4.8
Progression Factor		1.00	1.00		1.00	1.00	1.00	1.00	1.00	1.00	1.00	1.00
Incremental Delay, d2		0.5	0.0		0.6	0.0	0.1	0.4	0.1	0.0	0.3	0.1
Delay (s)		38.9	30.0		39.1	32.3	2.0	5.2	4.0	3.0	5.9	4.9
Level of Service		D	C		D	C	A	A	A	A	A	A
Approach Delay (s)		32.4			36.0			4.7			5.6	
Approach LOS		C			D			A			A	

Intersection Summary			
HCM Average Control Delay	7.8	HCM Level of Service	A
HCM Volume to Capacity ratio	0.33		
Actuated Cycle Length (s)	90.0	Sum of lost time (s)	12.0
Intersection Capacity Utilization	44.0%	ICU Level of Service	A
Analysis Period (min)	15		

c Critical Lane Group

Movement	EBL	EBT	EBR	WBL	WBT	WBR	NBL	NBT	NBR	SBL	SBT	SBR
Lane Configurations												
Ideal Flow (vphpl)	1900	1900	1900	1900	1900	1900	1900	1900	1900	1900	1900	1900
Total Lost time (s)	3.0	3.0	3.0	3.0	3.0	3.0	3.0	3.0	3.0	3.0	3.0	3.0
Lane Util. Factor	1.00	0.95	1.00	0.97	0.95	1.00	0.97	0.95	1.00	0.97	0.95	1.00
Frt	1.00	1.00	0.85	1.00	1.00	0.85	1.00	1.00	0.85	1.00	1.00	0.85
Flt Protected	0.95	1.00	1.00	0.95	1.00	1.00	0.95	1.00	1.00	0.95	1.00	1.00
Satd. Flow (prot)	1770	3539	1583	3433	3539	1583	3433	3539	1583	3433	3539	1583
Flt Permitted	0.95	1.00	1.00	0.95	1.00	1.00	0.95	1.00	1.00	0.95	1.00	1.00
Satd. Flow (perm)	1770	3539	1583	3433	3539	1583	3433	3539	1583	3433	3539	1583
Volume (vph)	199	133	460	191	240	306	601	902	146	164	876	360
Peak-hour factor, PHF	0.95	0.95	0.95	0.95	0.95	0.95	0.95	0.95	0.95	0.95	0.95	0.95
Adj. Flow (vph)	209	140	484	201	253	322	633	949	154	173	922	379
RTOR Reduction (vph)	0	0	0	0	0	0	0	0	0	0	0	0
Lane Group Flow (vph)	209	140	484	201	253	322	633	949	154	173	922	379
Turn Type	Prot		Free	Prot		Free	Prot		Free	Prot		Free
Protected Phases	7	4		3	8		5	2		1	6	
Permitted Phases			Free			Free			Free			Free
Actuated Green, G (s)	17.7	21.3	126.8	12.8	16.4	126.8	20.3	52.9	126.8	11.8	44.4	126.8
Effective Green, g (s)	21.7	25.3	126.8	16.8	20.4	126.8	24.3	56.9	126.8	15.8	48.4	126.8
Actuated g/C Ratio	0.17	0.20	1.00	0.13	0.16	1.00	0.19	0.45	1.00	0.12	0.38	1.00
Clearance Time (s)	7.0	7.0		7.0	7.0		7.0	7.0		7.0	7.0	
Vehicle Extension (s)	3.0	3.0		3.0	3.0		3.0	5.0		3.0	5.0	
Lane Grp Cap (vph)	303	706	1583	455	569	1583	658	1588	1583	428	1351	1583
v/s Ratio Prot	c0.12	0.04		0.06	c0.07		c0.18	0.27		0.05	c0.26	
v/s Ratio Perm			0.31			0.20			0.10			0.24
v/c Ratio	0.69	0.20	0.31	0.44	0.44	0.20	0.96	0.60	0.10	0.40	0.68	0.24
Uniform Delay, d1	49.4	42.3	0.0	50.7	48.1	0.0	50.8	26.3	0.0	51.2	32.8	0.0
Progression Factor	1.00	1.00	1.00	1.00	1.00	1.00	1.00	1.00	1.00	1.00	1.00	1.00
Incremental Delay, d2	6.4	0.1	0.5	0.7	0.6	0.3	25.8	0.9	0.1	0.6	1.9	0.4
Delay (s)	55.6	42.4	0.5	51.4	48.6	0.3	76.6	27.2	0.1	51.8	34.6	0.4
Level of Service	E	D	A	D	D	A	E	C	A	D	C	A
Approach Delay (s)		21.4			29.3			42.8			27.8	
Approach LOS		C			C			D			C	

Intersection Summary			
HCM Average Control Delay	32.4	HCM Level of Service	C
HCM Volume to Capacity ratio	0.70		
Actuated Cycle Length (s)	126.8	Sum of lost time (s)	12.0
Intersection Capacity Utilization	78.2%	ICU Level of Service	D
Analysis Period (min)	15		

c Critical Lane Group

Movement	EBL	EBR	NBL	NBT	SBT	SBR
Lane Configurations						
Ideal Flow (vphpl)	1900	1900	1900	1900	1900	1900
Total Lost time (s)	4.0			4.0	4.0	
Lane Util. Factor	0.97			0.95	0.95	
Frt	0.97			1.00	0.99	
Flt Protected	0.96			1.00	1.00	
Satd. Flow (prot)	3367			3534	3512	
Flt Permitted	0.96			0.70	1.00	
Satd. Flow (perm)	3367			2476	3512	
Volume (vph)	204	54	57	1849	1864	101
Peak-hour factor, PHF	0.95	0.95	0.95	0.95	0.95	0.95
Adj. Flow (vph)	215	57	60	1946	1962	106
RTOR Reduction (vph)	23	0	0	0	4	0
Lane Group Flow (vph)	249	0	0	2006	2064	0
Turn Type			Perm			
Protected Phases	4			2	6	
Permitted Phases			2			
Actuated Green, G (s)	10.9			85.0	85.0	
Effective Green, g (s)	13.9			88.0	88.0	
Actuated g/C Ratio	0.13			0.80	0.80	
Clearance Time (s)	7.0			7.0	7.0	
Vehicle Extension (s)	4.0			3.0	3.0	
Lane Grp Cap (vph)	426			1983	2812	
v/s Ratio Prot	c0.07				0.59	
v/s Ratio Perm				c0.81		
v/c Ratio	0.59			1.01	0.73	
Uniform Delay, d1	45.3			11.0	5.3	
Progression Factor	1.00			1.00	1.00	
Incremental Delay, d2	2.4			23.1	1.0	
Delay (s)	47.7			34.1	6.3	
Level of Service	D			C	A	
Approach Delay (s)	47.7			34.1	6.3	
Approach LOS	D			C	A	

Intersection Summary			
HCM Average Control Delay	21.7	HCM Level of Service	C
HCM Volume to Capacity ratio	0.95		
Actuated Cycle Length (s)	109.9	Sum of lost time (s)	8.0
Intersection Capacity Utilization	107.3%	ICU Level of Service	G
Analysis Period (min)	15		

c Critical Lane Group

Movement	EBL	EBT	EBR	WBL	WBT	WBR	NBL	NBT	NBR	SBL	SBT	SBR
Lane Configurations												
Ideal Flow (vphpl)	1900	1900	1900	1900	1900	1900	1900	1900	1900	1900	1900	1900
Total Lost time (s)	4.0	4.0	4.0	3.0	4.0	3.0	4.0	3.0	3.0	3.0	3.0	4.0
Lane Util. Factor	0.97	0.95	1.00	0.97	0.95	1.00	0.97	0.95	1.00	0.97	0.95	1.00
Frt	1.00	1.00	0.85	1.00	1.00	0.85	1.00	1.00	0.85	1.00	1.00	0.85
Flt Protected	0.95	1.00	1.00	0.95	1.00	1.00	0.95	1.00	1.00	0.95	1.00	1.00
Satd. Flow (prot)	3433	3539	1583	3433	3539	1583	3433	3539	1583	3433	3539	1583
Flt Permitted	0.95	1.00	1.00	0.95	1.00	1.00	0.95	1.00	1.00	0.95	1.00	1.00
Satd. Flow (perm)	3433	3539	1583	3433	3539	1583	3433	3539	1583	3433	3539	1583
Volume (vph)	431	607	433	223	609	90	1129	346	287	68	206	486
Peak-hour factor, PHF	0.95	0.95	0.95	0.95	0.95	0.95	0.95	0.95	0.95	0.95	0.95	0.95
Adj. Flow (vph)	454	639	456	235	641	95	1188	364	302	72	217	512
RTOR Reduction (vph)	0	0	0	0	0	0	0	0	50	0	0	0
Lane Group Flow (vph)	454	639	456	235	641	95	1188	364	252	72	217	512
Turn Type	Prot		Free	Prot		Free	Prot		pm+ov	Prot		Free
Protected Phases	1	6		5	2		7	4	5	3	8	
Permitted Phases			Free			Free			4			Free
Actuated Green, G (s)	12.5	21.0	100.0	8.1	16.6	100.0	36.0	39.4	47.5	4.0	7.4	100.0
Effective Green, g (s)	15.5	24.0	100.0	12.1	19.6	100.0	39.0	42.9	55.0	8.0	10.9	100.0
Actuated g/C Ratio	0.16	0.24	1.00	0.12	0.20	1.00	0.39	0.43	0.55	0.08	0.11	1.00
Clearance Time (s)	7.0	7.0		7.0	7.0		7.0	6.5	7.0	7.0	6.5	
Vehicle Extension (s)	2.5	4.0		2.5	4.0		2.5	2.5	2.5	2.5	2.5	
Lane Grp Cap (vph)	532	849	1583	415	694	1583	1339	1518	918	275	386	1583
v/s Ratio Prot	c0.13	0.18		0.07	c0.18		c0.35	0.10	0.03	0.02	c0.06	
v/s Ratio Perm			0.29			0.06			0.13			0.32
v/c Ratio	0.85	0.75	0.29	0.57	0.92	0.06	0.89	0.24	0.27	0.26	0.56	0.32
Uniform Delay, d1	41.1	35.2	0.0	41.5	39.5	0.0	28.4	18.2	11.9	43.2	42.3	0.0
Progression Factor	1.00	1.00	1.00	1.00	1.00	1.00	1.00	1.00	1.00	1.00	1.00	1.00
Incremental Delay, d2	12.4	6.1	0.5	1.4	19.9	0.1	7.4	0.1	0.1	0.4	1.5	0.5
Delay (s)	53.6	41.4	0.5	42.9	59.3	0.1	35.9	18.2	12.0	43.6	43.8	0.5
Level of Service	D	D	A	D	E	A	D	B	B	D	D	A
Approach Delay (s)		32.9			49.6			28.5			16.1	
Approach LOS		C			D			C			B	

Intersection Summary			
HCM Average Control Delay	31.9	HCM Level of Service	C
HCM Volume to Capacity ratio	0.85		
Actuated Cycle Length (s)	100.0	Sum of lost time (s)	15.0
Intersection Capacity Utilization	80.4%	ICU Level of Service	D
Analysis Period (min)	15		
c Critical Lane Group			

Movement	EBL	EBT	EBR	WBL	WBT	WBR	NBL	NBT	NBR	SBL	SBT	SBR
Lane Configurations												
Ideal Flow (vphpl)	1900	1900	1900	1900	1900	1900	1900	1900	1900	1900	1900	1900
Total Lost time (s)	3.0	3.0	3.0	3.0	3.0	3.0	3.0	3.0	3.0	3.0	3.0	3.0
Lane Util. Factor	0.97	1.00	1.00	1.00	0.95	1.00	0.97	0.95	1.00	1.00	0.95	1.00
Frt	1.00	1.00	0.85	1.00	1.00	0.85	1.00	1.00	0.85	1.00	1.00	0.85
Flt Protected	0.95	1.00	1.00	0.95	1.00	1.00	0.95	1.00	1.00	0.95	1.00	1.00
Satd. Flow (prot)	3433	1863	1583	1770	3539	1583	3433	3539	1583	1770	3539	1583
Flt Permitted	0.95	1.00	1.00	0.95	1.00	1.00	0.95	1.00	1.00	0.95	1.00	1.00
Satd. Flow (perm)	3433	1863	1583	1770	3539	1583	3433	3539	1583	1770	3539	1583
Volume (vph)	329	447	260	238	196	33	244	1273	298	4	909	258
Peak-hour factor, PHF	0.95	0.95	0.95	0.95	0.95	0.95	0.95	0.95	0.95	0.95	0.95	0.95
Adj. Flow (vph)	346	471	274	251	206	35	257	1340	314	4	957	272
RTOR Reduction (vph)	0	0	163	0	0	26	0	0	108	0	0	168
Lane Group Flow (vph)	346	471	111	251	206	9	257	1340	206	4	957	104
Turn Type	Prot		Perm	Prot		Perm	Prot		Perm	Prot		Perm
Protected Phases	7	4		3	8		1	6		5	2	
Permitted Phases			4			8			6			2
Actuated Green, G (s)	18.1	27.2	27.2	20.7	29.8	29.8	12.4	59.1	59.1	1.9	48.6	48.8
Effective Green, g (s)	22.1	32.2	32.2	24.7	34.8	34.8	16.4	63.6	63.6	5.9	53.1	53.1
Actuated g/C Ratio	0.16	0.23	0.23	0.18	0.25	0.25	0.12	0.46	0.46	0.04	0.38	0.38
Clearance Time (s)	7.0	8.0	8.0	7.0	8.0	8.0	7.0	7.5	7.5	7.0	7.5	7.5
Vehicle Extension (s)	3.0	3.0	3.0	3.0	3.0	3.0	3.0	3.0	3.0	3.0	3.0	3.0
Lane Grp Cap (vph)	548	433	368	316	890	398	407	1628	727	75	1358	607
v/s Ratio Prot	0.10	c0.25		c0.14	c0.06		c0.07	c0.38		0.00	0.27	
v/s Ratio Perm			0.07			0.01			0.13			0.07
v/c Ratio	0.63	1.09	0.30	0.79	0.23	0.02	0.63	0.82	0.28	0.05	0.70	0.17
Uniform Delay, d1	54.3	53.1	43.8	54.4	41.2	39.0	58.1	32.5	23.2	63.6	36.0	28.1
Progression Factor	1.00	1.00	1.00	1.00	1.00	1.00	1.00	1.00	1.00	1.00	1.00	1.00
Incremental Delay, d2	2.4	69.0	0.5	12.9	0.1	0.0	3.2	3.5	0.2	0.3	1.7	0.1
Delay (s)	56.7	122.1	44.3	67.3	41.3	39.0	61.3	36.1	23.5	63.9	37.7	28.3
Level of Service	E	F	D	E	D	D	E	D	C	E	D	C
Approach Delay (s)		81.8			54.4			37.4			35.7	
Approach LOS		F			D			D			D	

Intersection Summary			
HCM Average Control Delay	49.0	HCM Level of Service	D
HCM Volume to Capacity ratio	0.89		
Actuated Cycle Length (s)	138.4	Sum of lost time (s)	15.0
Intersection Capacity Utilization	93.6%	ICU Level of Service	F
Analysis Period (min)	15		
c Critical Lane Group			

Movement	EBL	EBR	NBL	NBT	SBT	SBR
Lane Configurations						
Ideal Flow (vphpl)	1900	1900	1900	1900	1900	1900
Total Lost time (s)	3.0	3.0	3.0	3.0	3.0	3.0
Lane Util. Factor	1.00	1.00	1.00	0.95	0.95	1.00
Frt	1.00	0.85	1.00	1.00	1.00	0.85
Flt Protected	0.95	1.00	0.95	1.00	1.00	1.00
Satd. Flow (prot)	1770	1583	1770	3539	3539	1583
Flt Permitted	0.95	1.00	0.09	1.00	1.00	1.00
Satd. Flow (perm)	1770	1583	162	3539	3539	1583
Volume (vph)	211	183	249	1577	1196	116
Peak-hour factor, PHF	0.95	0.95	0.95	0.95	0.95	0.95
Adj. Flow (vph)	222	193	262	1660	1259	122
RTOR Reduction (vph)	0	149	0	0	0	37
Lane Group Flow (vph)	222	44	262	1660	1259	85
Turn Type		Perm	pm+pt			pm+ov
Protected Phases	4		1	6	2	4
Permitted Phases		4	6			2
Actuated Green, G (s)	16.9	16.9	60.9	60.9	39.5	56.4
Effective Green, g (s)	20.9	20.9	64.4	64.4	43.0	63.9
Actuated g/C Ratio	0.23	0.23	0.71	0.71	0.47	0.70
Clearance Time (s)	7.0	7.0	7.0	6.5	6.5	7.0
Vehicle Extension (s)	3.0	3.0	4.0	4.0	4.0	3.0
Lane Grp Cap (vph)	405	362	438	2496	1667	1160
v/s Ratio Prot	c0.13		0.12	c0.47	c0.36	0.02
v/s Ratio Perm		0.03	0.30			0.04
v/c Ratio	0.55	0.12	0.60	0.67	0.76	0.07
Uniform Delay, d1	31.0	27.9	19.8	7.5	19.8	4.3
Progression Factor	1.00	1.00	1.00	1.00	1.00	1.00
Incremental Delay, d2	1.5	0.2	2.6	0.7	2.1	0.0
Delay (s)	32.6	28.1	22.4	8.2	22.0	4.4
Level of Service	C	C	C	A	C	A
Approach Delay (s)	30.5			10.1	20.4	
Approach LOS	C			B	C	

Intersection Summary				
HCM Average Control Delay	16.2	HCM Level of Service		B
HCM Volume to Capacity ratio	0.69			
Actuated Cycle Length (s)	91.3	Sum of lost time (s)		9.0
Intersection Capacity Utilization	68.5%	ICU Level of Service		C
Analysis Period (min)	15			

c Critical Lane Group

Movement	EBL	EBT	EBR	WBL	WBT	WBR	NBL	NBT	NBR	SBL	SBT	SBR
Lane Configurations												
Ideal Flow (vphpl)	1900	1900	1900	1900	1900	1900	1900	1900	1900	1900	1900	1900
Total Lost time (s)	3.0	3.0	3.0	3.0	3.0	3.0	3.0	3.0	3.0	3.0	3.0	3.0
Lane Util. Factor	0.97	0.91	1.00	0.97	0.91	1.00	0.97	0.95	1.00	0.97	0.95	1.00
Frt	1.00	1.00	0.85	1.00	1.00	0.85	1.00	1.00	0.85	1.00	1.00	0.85
Flt Protected	0.95	1.00	1.00	0.95	1.00	1.00	0.95	1.00	1.00	0.95	1.00	1.00
Satd. Flow (prot)	3433	5085	1583	3433	5085	1583	3433	3539	1583	3433	3539	1583
Flt Permitted	0.95	1.00	1.00	0.95	1.00	1.00	0.95	1.00	1.00	0.95	1.00	1.00
Satd. Flow (perm)	3433	5085	1583	3433	5085	1583	3433	3539	1583	3433	3539	1583
Volume (vph)	245	945	194	216	2087	1472	127	549	106	1002	394	231
Peak-hour factor, PHF	0.95	0.95	0.95	0.95	0.95	0.95	0.95	0.95	0.95	0.95	0.95	0.95
Adj. Flow (vph)	258	995	204	227	2197	1549	134	578	112	1055	415	243
RTOR Reduction (vph)	0	0	0	0	0	0	0	0	4	0	0	5
Lane Group Flow (vph)	258	995	204	227	2197	1549	134	578	108	1055	415	238
Turn Type	Prot		Free	Prot		Free	Prot		pm+ov	Prot		pm+ov
Protected Phases	1	6		5	2		3	8	5	7	4	1
Permitted Phases			Free			Free			8			4
Actuated Green, G (s)	13.5	39.6	135.0	13.2	39.3	135.0	5.0	24.7	37.9	30.0	49.7	63.2
Effective Green, g (s)	17.5	43.6	135.0	17.2	43.3	135.0	9.0	28.2	45.4	34.0	53.2	70.7
Actuated g/C Ratio	0.13	0.32	1.00	0.13	0.32	1.00	0.07	0.21	0.34	0.25	0.39	0.52
Clearance Time (s)	7.0	7.0		7.0	7.0		7.0	6.5	7.0	7.0	6.5	7.0
Vehicle Extension (s)	2.0	3.0		2.0	3.0		2.0	2.0	2.0	2.0	2.0	2.0
Lane Grp Cap (vph)	445	1642	1583	437	1631	1583	229	739	568	865	1395	864
v/s Ratio Prot	0.08	0.20		0.07	c0.43		0.04	0.16	0.02	c0.31	0.12	0.04
v/s Ratio Perm			0.13			c0.98			0.04			0.11
v/c Ratio	0.58	0.61	0.13	0.52	1.35	0.98	0.59	0.78	0.19	1.22	0.30	0.28
Uniform Delay, d1	55.3	38.5	0.0	55.0	45.9	0.0	61.2	50.5	31.8	50.5	28.1	17.9
Progression Factor	1.00	1.00	1.00	1.00	1.00	1.00	1.00	1.00	1.00	1.00	1.00	1.00
Incremental Delay, d2	1.1	1.7	0.2	0.4	160.3	18.1	2.5	5.0	0.1	109.3	0.0	0.1
Delay (s)	56.4	40.1	0.2	55.5	206.2	18.1	63.6	55.5	31.8	159.8	28.1	18.0
Level of Service	E	D	A	E	F	B	E	E	C	F	C	B
Approach Delay (s)		37.4			124.2			53.6			107.8	
Approach LOS		D			F			D			F	

Intersection Summary				
HCM Average Control Delay	97.5	HCM Level of Service		F
HCM Volume to Capacity ratio	1.14			
Actuated Cycle Length (s)	135.0	Sum of lost time (s)		3.0
Intersection Capacity Utilization	104.4%	ICU Level of Service		G
Analysis Period (min)	15			

c Critical Lane Group

Movement	EBL	EBT	EBR	WBL	WBT	WBR	NBL	NBT	NBR	SBL	SBT	SBR
Lane Configurations												
Ideal Flow (vphpl)	1900	1900	1900	1900	1900	1900	1900	1900	1900	1900	1900	1900
Total Lost time (s)	3.0	3.0	3.0	3.0	3.0	3.0	3.0	3.0	3.0	3.0	3.0	
Lane Util. Factor	1.00	0.91	1.00	1.00	0.91	1.00	1.00	0.95	1.00	1.00	0.95	
Frt	1.00	1.00	0.85	1.00	1.00	0.85	1.00	1.00	0.85	1.00	0.90	
Flt Protected	0.95	1.00	1.00	0.95	1.00	1.00	0.95	1.00	1.00	0.95	1.00	
Satd. Flow (prot)	1770	5085	1583	1770	5085	1583	1770	3539	1583	1770	3170	
Flt Permitted	0.95	1.00	1.00	0.95	1.00	1.00	0.49	1.00	1.00	0.57	1.00	
Satd. Flow (perm)	1770	5085	1583	1770	5085	1583	910	3539	1583	1058	3170	
Volume (vph)	27	1953	92	474	3148	159	145	33	456	290	65	147
Peak-hour factor, PHF	0.95	0.95	0.95	0.95	0.95	0.95	0.95	0.95	0.95	0.95	0.95	0.95
Adj. Flow (vph)	28	2056	97	499	3314	167	153	35	480	305	68	155
RTOR Reduction (vph)	0	0	49	0	0	36	0	0	0	0	106	0
Lane Group Flow (vph)	28	2056	48	499	3314	131	153	35	480	305	117	0
Turn Type	Prot		pm+ov	Prot		pm+ov	pm+pt		Free	pm+pt		
Protected Phases	1	6	3	5	2	7	3	8		7	4	
Permitted Phases			6			2	8		Free	4		
Actuated Green, G (s)	4.2	49.4	61.7	40.8	86.0	102.0	19.1	6.8	140.0	26.5	10.5	
Effective Green, g (s)	8.2	52.9	69.2	44.8	89.5	109.5	26.6	10.3	140.0	33.3	14.0	
Actuated g/C Ratio	0.06	0.38	0.49	0.32	0.64	0.78	0.19	0.07	1.00	0.24	0.10	
Clearance Time (s)	7.0	6.5	7.0	7.0	6.5	7.0	7.0	6.5		7.0	6.5	
Vehicle Extension (s)	2.0	3.0	2.0	2.0	3.0	2.0	2.0	2.0		2.0	2.0	
Lane Grp Cap (vph)	104	1921	816	566	3251	1272	273	260	1583	353	317	
v/s Ratio Prot	0.02	c0.40	0.01	c0.28	c0.65	0.01	0.07	0.01		c0.12	0.04	
v/s Ratio Perm			0.02			0.07	0.04		0.30	c0.08		
v/c Ratio	0.27	1.07	0.06	0.88	1.02	0.10	0.56	0.13	0.30	0.86	0.37	
Uniform Delay, d1	63.0	43.5	18.4	45.1	25.2	3.6	50.3	60.7	0.0	49.5	58.9	
Progression Factor	1.00	1.00	1.00	1.00	1.00	1.00	1.00	1.00	1.00	1.00	1.00	
Incremental Delay, d2	0.5	42.3	0.0	14.6	20.9	0.0	1.6	0.1	0.5	18.6	3.3	
Delay (s)	63.5	85.8	18.4	59.7	46.1	3.6	51.9	60.8	0.5	68.1	62.1	
Level of Service	E	F	B	E	D	A	D	E	A	E	E	
Approach Delay (s)		82.6			46.0			15.4			65.6	
Approach LOS		F			D			B			E	

Intersection Summary			
HCM Average Control Delay	55.5	HCM Level of Service	E
HCM Volume to Capacity ratio	1.00		
Actuated Cycle Length (s)	140.0	Sum of lost time (s)	12.0
Intersection Capacity Utilization	101.9%	ICU Level of Service	G
Analysis Period (min)	15		

c Critical Lane Group

Movement	EBL	EBT	EBR	WBL	WBT	WBR	NBL	NBT	NBR	SBL	SBT	SBR
Lane Configurations												
Ideal Flow (vphpl)	1900	1900	1900	1900	1900	1900	1900	1900	1900	1900	1900	1900
Total Lost time (s)	3.0	3.0	3.0	3.0	3.0	3.0	3.0	3.0	3.0	3.0	3.0	3.0
Lane Util. Factor	0.97	0.86	1.00	0.97	0.86	1.00	0.97	0.95	1.00	0.97	0.95	1.00
Frt	1.00	1.00	0.85	1.00	1.00	0.85	1.00	1.00	0.85	1.00	1.00	0.85
Flt Protected	0.95	1.00	1.00	0.95	1.00	1.00	0.95	1.00	1.00	0.95	1.00	1.00
Satd. Flow (prot)	3433	6408	1583	3433	6408	1583	3433	3539	1583	3433	3539	1583
Flt Permitted	0.95	1.00	1.00	0.95	1.00	1.00	0.95	1.00	1.00	0.95	1.00	1.00
Satd. Flow (perm)	3433	6408	1583	3433	6408	1583	3433	3539	1583	3433	3539	1583
Volume (vph)	859	2481	243	88	4153	346	400	109	675	380	119	1171
Peak-hour factor, PHF	0.95	0.95	0.95	0.95	0.95	0.95	0.95	0.95	0.95	0.95	0.95	0.95
Adj. Flow (vph)	904	2612	256	93	4372	364	421	115	711	400	125	1233
RTOR Reduction (vph)	0	0	74	0	0	0	0	0	0	0	0	0
Lane Group Flow (vph)	904	2612	182	93	4372	364	421	115	711	400	125	1233
Turn Type	Prot		Perm	Prot		Free	Prot		Free	Prot		Free
Protected Phases	1	6		5	2		7	4		3	8	
Permitted Phases			6			Free			Free			Free
Actuated Green, G (s)	15.0	99.0	99.0	5.0	89.0	145.0	7.0	6.0	145.0	7.0	6.0	145.0
Effective Green, g (s)	19.0	103.0	103.0	9.0	93.0	145.0	11.0	10.0	145.0	11.0	10.0	145.0
Actuated g/C Ratio	0.13	0.71	0.71	0.06	0.64	1.00	0.08	0.07	1.00	0.08	0.07	1.00
Clearance Time (s)	7.0	7.0	7.0	7.0	7.0		7.0	7.0		7.0	7.0	
Vehicle Extension (s)	2.0	3.0	3.0	2.0	3.0		3.0	3.0		3.0	3.0	
Lane Grp Cap (vph)	450	4552	1124	213	4110	1583	260	244	1583	260	244	1583
v/s Ratio Prot	c0.26	0.41		0.03	c0.68		c0.12	0.03		0.12	0.04	
v/s Ratio Perm			0.11			0.23			0.45			c0.78
v/c Ratio	2.01	0.57	0.16	0.44	1.06	0.23	1.62	0.47	0.45	1.54	0.51	0.78
Uniform Delay, d1	63.0	10.3	6.9	65.6	26.0	0.0	67.0	65.0	0.0	67.0	65.1	0.0
Progression Factor	1.00	1.00	1.00	1.00	1.00	1.00	1.00	1.00	1.00	1.00	1.00	1.00
Incremental Delay, d2	461.8	0.5	0.3	0.5	34.7	0.3	295.7	1.4	0.9	260.7	1.8	3.9
Delay (s)	524.8	10.8	7.2	66.1	60.7	0.3	362.7	66.4	0.9	327.7	67.0	3.9
Level of Service	F	B	A	E	E	A	F	E	A	F	E	A
Approach Delay (s)		133.7			56.3			129.1			82.0	
Approach LOS		F			E			F			F	

Intersection Summary			
HCM Average Control Delay	93.2	HCM Level of Service	F
HCM Volume to Capacity ratio	1.21		
Actuated Cycle Length (s)	145.0	Sum of lost time (s)	9.0
Intersection Capacity Utilization	112.8%	ICU Level of Service	H
Analysis Period (min)	15		

c Critical Lane Group

Movement	EBL	EBT	EBR	WBL	WBT	WBR	NBL	NBT	NBR	SBL	SBT	SBR
Lane Configurations												
Ideal Flow (vphpl)	1900	1900	1900	1900	1900	1900	1900	1900	1900	1900	1900	1900
Total Lost time (s)		3.0		3.0	3.0			3.0	3.0		3.0	
Lane Util. Factor		0.95		1.00	0.95			1.00	1.00		1.00	
Frt		0.99		1.00	1.00			1.00	0.85		0.94	
Flt Protected		1.00		0.95	1.00			0.95	1.00		0.98	
Satd. Flow (prot)		3501		1770	3539			1775	1583		1724	
Flt Permitted		0.92		0.06	1.00			0.95	1.00		0.98	
Satd. Flow (perm)		3235		117	3539			1775	1583		1724	
Volume (vph)	25	1719	125	165	1073	0	180	2	262	7	3	7
Peak-hour factor, PHF	0.95	0.95	0.95	0.95	0.95	0.95	0.95	0.95	0.95	0.95	0.95	0.95
Adj. Flow (vph)	26	1809	132	174	1129	0	189	2	276	7	3	7
RTOR Reduction (vph)	0	3	0	0	0	0	0	0	0	0	7	0
Lane Group Flow (vph)	0	1964	0	174	1129	0	0	191	276	0	10	0
Turn Type	Perm			pm+pt			Split		pm+ov	Split		
Protected Phases		6		5	2		4	4	5	8	8	
Permitted Phases	6			2					4			
Actuated Green, G (s)		57.7		68.8	68.8			15.7	21.3		2.7	
Effective Green, g (s)		60.7		71.8	71.8			18.7	26.8		5.7	
Actuated g/C Ratio		0.58		0.68	0.68			0.18	0.25		0.05	
Clearance Time (s)		6.0		5.5	6.0			6.0	5.5		6.0	
Vehicle Extension (s)		4.0		2.0	4.0			3.0	2.0		3.0	
Lane Grp Cap (vph)		1867		207	2415			316	403		93	
v/s Ratio Prot				c0.06	0.32			0.11	c0.05		c0.01	
v/s Ratio Perm		c0.61		0.51					0.12			
v/c Ratio		1.05		0.84	0.47			0.60	0.68		0.11	
Uniform Delay, d1		22.2		32.0	7.8			39.8	35.4		47.3	
Progression Factor		1.00		1.00	1.00			1.00	1.00		1.00	
Incremental Delay, d2		36.0		24.4	0.2			3.2	3.8		0.5	
Delay (s)		58.2		56.4	8.0			43.1	39.2		47.9	
Level of Service		E		E	A			D	D		D	
Approach Delay (s)		58.2			14.4			40.8			47.9	
Approach LOS		E			B			D			D	

Intersection Summary

HCM Average Control Delay	40.8	HCM Level of Service	D
HCM Volume to Capacity ratio	0.90		
Actuated Cycle Length (s)	105.2	Sum of lost time (s)	12.0
Intersection Capacity Utilization	108.6%	ICU Level of Service	G
Analysis Period (min)	15		

c Critical Lane Group

Movement	EBL	EBT	WBT	WBR	SBL	SBR
Lane Configurations						
Ideal Flow (vphpl)	1900	1900	1900	1900	1900	1900
Total Lost time (s)	3.0	3.0	3.0	3.0	3.0	3.0
Lane Util. Factor	0.97	0.95	0.91	0.91	0.97	1.00
Frt	1.00	1.00	0.99	0.85	1.00	0.85
Flt Protected	0.95	1.00	1.00	1.00	0.95	1.00
Satd. Flow (prot)	3433	3539	3343	1441	3433	1583
Flt Permitted	0.95	1.00	1.00	1.00	0.95	1.00
Satd. Flow (perm)	3433	3539	3343	1441	3433	1583
Volume (vph)	1132	623	562	782	649	747
Peak-hour factor, PHF	0.95	0.95	0.95	0.95	0.95	0.95
Adj. Flow (vph)	1192	656	592	823	683	786
RTOR Reduction (vph)	0	0	5	6	0	474
Lane Group Flow (vph)	1192	656	647	757	683	312
Turn Type	Prot			pm+ov		Perm
Protected Phases	5	2	6	4	4	
Permitted Phases				6		4
Actuated Green, G (s)	48.3	82.2	26.9	69.8	42.9	42.9
Effective Green, g (s)	52.3	86.2	30.9	78.3	47.4	47.4
Actuated g/C Ratio	0.37	0.62	0.22	0.56	0.34	0.34
Clearance Time (s)	7.0	7.0	7.0	7.5	7.5	7.5
Vehicle Extension (s)	2.0	3.0	3.0	3.0	3.0	3.0
Lane Grp Cap (vph)	1286	2185	740	839	1166	537
v/s Ratio Prot	c0.35	0.19	0.19	c0.31	0.20	
v/s Ratio Perm				0.22		0.20
v/c Ratio	0.93	0.30	0.87	0.90	0.59	0.58
Uniform Delay, d1	41.8	12.5	52.5	27.2	38.0	37.9
Progression Factor	1.00	1.00	1.00	1.00	1.00	1.00
Incremental Delay, d2	11.3	0.1	11.2	12.9	0.8	1.6
Delay (s)	53.1	12.6	63.7	40.1	38.8	39.5
Level of Service	D	B	E	D	D	D
Approach Delay (s)		38.7	51.0		39.2	
Approach LOS		D	D		D	

Intersection Summary

HCM Average Control Delay	42.5	HCM Level of Service	D
HCM Volume to Capacity ratio	0.91		
Actuated Cycle Length (s)	139.6	Sum of lost time (s)	6.0
Intersection Capacity Utilization	84.7%	ICU Level of Service	E
Analysis Period (min)	15		

c Critical Lane Group

HCM Signalized Intersection Capacity Analysis
24: Pacific Blvd & Loudoun County Parkway

Kincora
Total Future 2015

Movement	EBL	EBT	EBR	WBL	WBT	WBR	NBL	NBT	NBR	SBL	SBT	SBR
Lane Configurations												
Ideal Flow (vphpl)	1900	1900	1900	1900	1900	1900	1900	1900	1900	1900	1900	1900
Total Lost time (s)	4.0		4.0	4.0		4.0	4.0	4.0	4.0	4.0	4.0	4.0
Lane Util. Factor	0.97		1.00	1.00		1.00	1.00	0.95	1.00	1.00	0.95	1.00
Frt	1.00		0.85	1.00		0.85	1.00	1.00	0.85	1.00	1.00	0.85
Flt Protected	0.95		1.00	0.95		1.00	0.95	1.00	1.00	0.95	1.00	1.00
Satd. Flow (prot)	3433		1583	1770		1583	1770	3539	1583	1770	3539	1583
Flt Permitted	0.95		1.00	0.95		1.00	0.06	1.00	1.00	0.07	1.00	1.00
Satd. Flow (perm)	3433		1583	1770		1583	118	3539	1583	126	3539	1583
Volume (vph)	495	0	387	56	0	683	230	1634	12	345	1464	236
Peak-hour factor, PHF	0.95	0.95	0.95	0.95	0.95	0.95	0.95	0.95	0.95	0.95	0.95	0.95
Adj. Flow (vph)	521	0	407	59	0	719	242	1720	13	363	1541	248
RTOR Reduction (vph)	0	0	0	0	0	0	0	0	3	0	0	45
Lane Group Flow (vph)	521	0	407	59	0	719	242	1720	10	363	1541	203
Turn Type	Prot		Free	Prot		Free	pm+pt		pm+ov	pm+pt		pm+ov
Protected Phases	7	4		3	8		5	2	3	1	6	7
Permitted Phases			Free			Free	2		2	6		6
Actuated Green, G (s)	28.4		118.6	18.6		118.6	78.2	64.2	82.8	63.3	56.3	84.7
Effective Green, g (s)	29.4		118.6	19.6		118.6	81.2	67.2	86.8	69.3	59.3	88.7
Actuated g/C Ratio	0.25		1.00	0.17		1.00	0.68	0.57	0.73	0.58	0.50	0.75
Clearance Time (s)	5.0			5.0			7.0	7.0	5.0	7.0	7.0	5.0
Vehicle Extension (s)	2.0			2.0			2.0	3.0	2.0	2.0	3.0	2.0
Lane Grp Cap (vph)	851		1583	293		1583	330	2005	1212	212	1770	1237
v/s Ratio Prot	c0.15			0.03			c0.11	0.49	0.00	c0.14	0.44	0.04
v/s Ratio Perm			0.26			0.45	0.39		0.00	c0.86		0.09
v/c Ratio	0.61		0.26	0.20		0.45	0.73	0.86	0.01	1.71	0.87	0.16
Uniform Delay, d1	39.5		0.0	42.7		0.0	34.4	21.7	4.3	35.4	26.3	4.3
Progression Factor	1.00		1.00	1.00		1.00	1.00	1.00	1.00	1.00	1.00	1.00
Incremental Delay, d2	0.9		0.4	0.1		0.9	7.1	3.9	0.0	339.8	5.0	0.0
Delay (s)	40.5		0.4	42.9		0.9	41.5	25.6	4.3	375.1	31.2	4.3
Level of Service	D		A	D		A	D	C	A	F	C	A
Approach Delay (s)		22.9			4.1			27.4			86.2	
Approach LOS		C			A			C			F	

Intersection Summary

HCM Average Control Delay	45.2	HCM Level of Service	D
HCM Volume to Capacity ratio	1.33		
Actuated Cycle Length (s)	118.6	Sum of lost time (s)	12.0
Intersection Capacity Utilization	95.1%	ICU Level of Service	F
Analysis Period (min)	15		

c Critical Lane Group

HCM Unsignalized Intersection Capacity Analysis
25: Russel Branch Pkwy & Richfield Way

Kincora
Total Future 2015

Movement	EBL	EBT	EBR	WBL	WBT	WBR	NBL	NBT	NBR	SBL	SBT	SBR
Lane Configurations												
Sign Control		Free			Free			Stop			Stop	
Grade		0%			0%			0%			0%	
Volume (veh/h)	0	310	5	0	165	0	5	0	0	0	0	0
Peak Hour Factor	0.92	0.92	0.92	0.92	0.92	0.92	0.92	0.92	0.92	0.92	0.92	0.92
Hourly flow rate (vph)	0	337	5	0	179	0	5	0	0	0	0	0
Pedestrians												
Lane Width (ft)												
Walking Speed (ft/s)												
Percent Blockage												
Right turn flare (veh)												
Median type								None			None	
Median storage veh)												
Upstream signal (ft)												
pX, platoon unblocked												
vC, conflicting volume	179			342			427	516	168	348	522	90
vC1, stage 1 conf vol												
vC2, stage 2 conf vol												
vCu, unblocked vol	179			342			427	516	168	348	522	90
tC, single (s)	4.1			4.1			7.5	6.5	6.9	7.5	6.5	6.9
tC, 2 stage (s)												
tF (s)	2.2			2.2			3.5	4.0	3.3	3.5	4.0	3.3
p0 queue free %	100			100			99	100	100	100	100	100
cM capacity (veh/h)	1394			1213			512	461	846	582	458	950

Direction, Lane #	EB 1	EB 2	EB 3	EB 4	WB 1	WB 2	WB 3	WB 4	NB 1	NB 2	SB 1	SB 2
Volume Total	0	168	168	5	0	90	90	0	5	0	0	0
Volume Left	0	0	0	0	0	0	0	0	5	0	0	0
Volume Right	0	0	0	5	0	0	0	0	0	0	0	0
cSH	1700	1700	1700	1700	1700	1700	1700	1700	512	1700	1700	1700
Volume to Capacity	0.00	0.10	0.10	0.00	0.00	0.05	0.05	0.00	0.01	0.00	0.00	0.00
Queue Length 95th (ft)	0	0	0	0	0	0	0	0	1	0	0	0
Control Delay (s)	0.0	0.0	0.0	0.0	0.0	0.0	0.0	0.0	12.1	0.0	0.0	0.0
Lane LOS									B	A	A	A
Approach Delay (s)	0.0				0.0				12.1		0.0	
Approach LOS									B		A	

Intersection Summary

Average Delay	0.1		
Intersection Capacity Utilization	18.6%	ICU Level of Service	A
Analysis Period (min)	15		

Movement	WBL	WBR	NBT	NBR	SBL	SBT
Lane Configurations						
Ideal Flow (vphpl)	1900	1900	1900	1900	1900	1900
Total Lost time (s)	4.0	4.0	4.0		4.0	4.0
Lane Util. Factor	1.00	1.00	1.00		1.00	1.00
Frt	1.00	0.85	0.96		1.00	1.00
Flt Protected	0.95	1.00	1.00		0.95	1.00
Satd. Flow (prot)	1770	1583	1796		1770	1863
Flt Permitted	0.95	1.00	1.00		0.21	1.00
Satd. Flow (perm)	1770	1583	1796		397	1863
Volume (vph)	112	488	660	240	637	997
Peak-hour factor, PHF	0.95	0.95	0.95	0.95	0.95	0.95
Adj. Flow (vph)	118	514	695	253	671	1049
RTOR Reduction (vph)	0	253	8	0	0	0
Lane Group Flow (vph)	118	261	940	0	671	1049
Turn Type		Perm			Perm	
Protected Phases	8		2			6
Permitted Phases		8			6	
Actuated Green, G (s)	24.4	24.4	105.3		105.3	105.3
Effective Green, g (s)	27.4	27.4	108.3		108.3	108.3
Actuated g/C Ratio	0.19	0.19	0.75		0.75	0.75
Clearance Time (s)	7.0	7.0	7.0		7.0	7.0
Vehicle Extension (s)	2.0	2.0	2.0		2.0	2.0
Lane Grp Cap (vph)	337	302	1354		299	1404
v/s Ratio Prot	0.07		0.52			0.56
v/s Ratio Perm		c0.17			c1.69	
v/c Ratio	0.35	0.87	0.69		2.24	0.75
Uniform Delay, d1	50.4	56.4	9.1		17.7	10.0
Progression Factor	1.00	1.00	1.00		1.00	1.00
Incremental Delay, d2	0.2	21.3	1.3		570.5	1.9
Delay (s)	50.7	77.6	10.4		588.2	11.9
Level of Service	D	E	B		F	B
Approach Delay (s)	72.6		10.4			236.7
Approach LOS	E		B			F

Intersection Summary				
HCM Average Control Delay	140.3	HCM Level of Service	F
HCM Volume to Capacity ratio	1.96		
Actuated Cycle Length (s)	143.7	Sum of lost time (s)	8.0
Intersection Capacity Utilization	103.0%	ICU Level of Service	G
Analysis Period (min)	15		

c Critical Lane Group

Movement	WBL	WBR	NBT	NBR	SBL	SBT
Lane Configurations						
Sign Control	Stop		Free			Free
Grade	0%		0%			0%
Volume (veh/h)	0	159	740	114	0	1109
Peak Hour Factor	0.95	0.95	0.95	0.95	0.95	0.95
Hourly flow rate (vph)	0	167	779	120	0	1167
Pedestrians						
Lane Width (ft)						
Walking Speed (ft/s)						
Percent Blockage						
Right turn flare (veh)						
Median type	None					
Median storage veh)						
Upstream signal (ft)						850
pX, platoon unblocked	0.28					
vC, conflicting volume	2006	839			899	
vC1, stage 1 conf vol						
vC2, stage 2 conf vol						
vCu, unblocked vol	4554	839			899	
tC, single (s)	6.4	6.2			4.1	
tC, 2 stage (s)						
tF (s)	3.5	3.3			2.2	
p0 queue free %	100	54			100	
cM capacity (veh/h)	0	366			756	

Direction, Lane #	WB 1	NB 1	SB 1
Volume Total	167	899	1167
Volume Left	0	0	0
Volume Right	167	120	0
cSH	366	1700	1700
Volume to Capacity	0.46	0.53	0.69
Queue Length 95th (ft)	58	0	0
Control Delay (s)	22.9	0.0	0.0
Lane LOS	C		
Approach Delay (s)	22.9	0.0	0.0
Approach LOS	C		

Intersection Summary			
Average Delay	1.7		
Intersection Capacity Utilization	62.4%	ICU Level of Service	B
Analysis Period (min)	15		

Movement	WBL	WBR	NBT	NBR	SBL	SBT
Lane Configurations						
Sign Control	Stop		Free			Free
Grade	0%		0%			0%
Volume (veh/h)	75	50	804	37	55	1054
Peak Hour Factor	0.95	0.95	0.95	0.95	0.95	0.95
Hourly flow rate (vph)	79	53	846	39	58	1109
Pedestrians						
Lane Width (ft)						
Walking Speed (ft/s)						
Percent Blockage						
Right turn flare (veh)						
Median type	None					
Median storage veh)						
Upstream signal (ft)						
pX, platoon unblocked						
vC, conflicting volume	2091	866			885	
vC1, stage 1 conf vol						
vC2, stage 2 conf vol						
vCu, unblocked vol	2091	866			885	
tC, single (s)	6.4	6.2			4.1	
tC, 2 stage (s)						
tF (s)	3.5	3.3			2.2	
p0 queue free %	0	85			92	
cM capacity (veh/h)	53	353			765	

Direction, Lane #	WB 1	NB 1	SB 1
Volume Total	132	885	1167
Volume Left	79	0	58
Volume Right	53	39	0
cSH	81	1700	765
Volume to Capacity	1.63	0.52	0.08
Queue Length 95th (ft)	272	0	6
Control Delay (s)	421.0	0.0	2.6
Lane LOS	F		A
Approach Delay (s)	421.0	0.0	2.6
Approach LOS	F		

Intersection Summary			
Average Delay	26.7		
Intersection Capacity Utilization	114.2%	ICU Level of Service	H
Analysis Period (min)	15		

Movement	WBL	WBR	NBT	NBR	SBL	SBT
Lane Configurations						
Sign Control	Stop		Free			Free
Grade	0%		0%			0%
Volume (veh/h)	0	8	1102	46	0	1634
Peak Hour Factor	0.95	0.95	0.95	0.95	0.95	0.95
Hourly flow rate (vph)	0	8	1160	48	0	1720
Pedestrians						
Lane Width (ft)						
Walking Speed (ft/s)						
Percent Blockage						
Right turn flare (veh)						
Median type	None					
Median storage veh)						
Upstream signal (ft)			844			
pX, platoon unblocked	0.76	0.76			0.76	
vC, conflicting volume	2904	1184			1208	
vC1, stage 1 conf vol						
vC2, stage 2 conf vol						
vCu, unblocked vol	3500	1242			1274	
tC, single (s)	6.4	6.2			4.1	
tC, 2 stage (s)						
tF (s)	3.5	3.3			2.2	
p0 queue free %	100	95			100	
cM capacity (veh/h)	5	162			415	

Direction, Lane #	WB 1	NB 1	SB 1
Volume Total	8	1208	1720
Volume Left	0	0	0
Volume Right	8	48	0
cSH	162	1700	1700
Volume to Capacity	0.05	0.71	1.01
Queue Length 95th (ft)	4	0	0
Control Delay (s)	28.4	0.0	0.0
Lane LOS	D		
Approach Delay (s)	28.4	0.0	0.0
Approach LOS	D		

Intersection Summary			
Average Delay	0.1		
Intersection Capacity Utilization	89.3%	ICU Level of Service	E
Analysis Period (min)	15		

Movement	WBL	WBR	NBT	NBR	SBL	SBT
Lane Configurations						
Sign Control	Stop		Free			Free
Grade	0%		0%			0%
Volume (veh/h)	0	8	1064	46	0	1634
Peak Hour Factor	0.95	0.95	0.95	0.95	0.95	0.95
Hourly flow rate (vph)	0	8	1120	48	0	1720
Pedestrians						
Lane Width (ft)						
Walking Speed (ft/s)						
Percent Blockage						
Right turn flare (veh)						
Median type	None					
Median storage veh)						
Upstream signal (ft)						
pX, platoon unblocked						
vC, conflicting volume	2864	1144			1168	
vC1, stage 1 conf vol						
vC2, stage 2 conf vol						
vCu, unblocked vol	2864	1144			1168	
tC, single (s)	6.4	6.2			4.1	
tC, 2 stage (s)						
tF (s)	3.5	3.3			2.2	
p0 queue free %	100	97			100	
cM capacity (veh/h)	18	243			598	

Direction, Lane #	WB 1	NB 1	SB 1
Volume Total	8	1168	1720
Volume Left	0	0	0
Volume Right	8	48	0
cSH	243	1700	1700
Volume to Capacity	0.03	0.69	1.01
Queue Length 95th (ft)	3	0	0
Control Delay (s)	20.3	0.0	0.0
Lane LOS	C		
Approach Delay (s)	20.3	0.0	0.0
Approach LOS	C		

Intersection Summary			
Average Delay	0.1		
Intersection Capacity Utilization	89.3%	ICU Level of Service	E
Analysis Period (min)	15		

Movement	EBL	EBT	EBR	WBL	WBT	WBR	NBL	NBT	NBR	SBL	SBT	SBR
Lane Configurations												
Sign Control		Stop			Stop			Free			Free	
Grade		0%			0%			0%			0%	
Volume (veh/h)	0	0	184	0	0	8	0	1055	18	0	1450	50
Peak Hour Factor	0.95	0.95	0.95	0.95	0.95	0.95	0.95	0.95	0.95	0.95	0.95	0.95
Hourly flow rate (vph)	0	0	194	0	0	8	0	1111	19	0	1526	53
Pedestrians												
Lane Width (ft)												
Walking Speed (ft/s)												
Percent Blockage												
Right turn flare (veh)												
Median type		None			None							
Median storage veh)												
Upstream signal (ft)												
pX, platoon unblocked												
vC, conflicting volume	2681	2682	1553	2866	2699	1120	1579			1129		
vC1, stage 1 conf vol												
vC2, stage 2 conf vol												
vCu, unblocked vol	2681	2682	1553	2866	2699	1120	1579			1129		
tC, single (s)	7.1	6.5	6.2	7.1	6.5	6.2	4.1			4.1		
tC, 2 stage (s)												
tF (s)	3.5	4.0	3.3	3.5	4.0	3.3	2.2			2.2		
p0 queue free %	100	100	0	0	100	97	100			100		
cM capacity (veh/h)	14	22	140	0	21	251	417			619		

Direction, Lane #	EB 1	WB 1	NB 1	SB 1
Volume Total	194	8	1129	1579
Volume Left	0	0	0	0
Volume Right	194	8	19	53
cSH	140	251	1700	1700
Volume to Capacity	1.39	0.03	0.66	0.93
Queue Length 95th (ft)	314	3	0	0
Control Delay (s)	272.2	19.8	0.0	0.0
Lane LOS	F	C		
Approach Delay (s)	272.2	19.8	0.0	0.0
Approach LOS	F	C		

Intersection Summary			
Average Delay	18.2		
Intersection Capacity Utilization	97.4%	ICU Level of Service	F
Analysis Period (min)	15		

Movement	EBL	EBR	NBL	NBT	SBT	SBR
Lane Configurations						
Sign Control	Stop			Free	Free	
Grade	0%			0%	0%	
Volume (veh/h)	0	193	0	1063	1307	68
Peak Hour Factor	0.95	0.95	0.95	0.95	0.95	0.95
Hourly flow rate (vph)	0	203	0	1119	1376	72
Pedestrians						
Lane Width (ft)						
Walking Speed (ft/s)						
Percent Blockage						
Right turn flare (veh)						
Median type	None					
Median storage veh)						
Upstream signal (ft)						
pX, platoon unblocked						
vC, conflicting volume	2531	1412	1447			
vC1, stage 1 conf vol						
vC2, stage 2 conf vol						
vCu, unblocked vol	2531	1412	1447			
tC, single (s)	6.4	6.2	4.1			
tC, 2 stage (s)						
tF (s)	3.5	3.3	2.2			
p0 queue free %	100	0	100			
cM capacity (veh/h)	30	169	468			

Direction, Lane #	EB 1	NB 1	SB 1
Volume Total	203	1119	1447
Volume Left	0	0	0
Volume Right	203	0	72
cSH	169	1700	1700
Volume to Capacity	1.20	0.66	0.85
Queue Length 95th (ft)	278	0	0
Control Delay (s)	187.6	0.0	0.0
Lane LOS	F		
Approach Delay (s)	187.6	0.0	0.0
Approach LOS	F		

Intersection Summary			
Average Delay	13.8		
Intersection Capacity Utilization	91.5%	ICU Level of Service	F
Analysis Period (min)	15		

Movement	EBL	EBR	NBL	NBT	SBT	SBR
Lane Configurations						
Sign Control	Stop			Free	Free	
Grade	0%			0%	0%	
Volume (veh/h)	104	302	204	859	1073	37
Peak Hour Factor	0.95	0.95	0.95	0.95	0.95	0.95
Hourly flow rate (vph)	109	318	215	904	1129	39
Pedestrians						
Lane Width (ft)						
Walking Speed (ft/s)						
Percent Blockage						
Right turn flare (veh)						
Median type	None					
Median storage veh)						
Upstream signal (ft)						
pX, platoon unblocked						
vC, conflicting volume	2483	1149	1168			
vC1, stage 1 conf vol						
vC2, stage 2 conf vol						
vCu, unblocked vol	2483	1149	1168			
tC, single (s)	6.4	6.2	4.1			
tC, 2 stage (s)						
tF (s)	3.5	3.3	2.2			
p0 queue free %	0	0	64			
cM capacity (veh/h)	21	242	598			

Direction, Lane #	EB 1	NB 1	SB 1
Volume Total	427	1119	1168
Volume Left	109	215	0
Volume Right	318	0	39
cSH	65	598	1700
Volume to Capacity	6.57	0.36	0.69
Queue Length 95th (ft)	Err	41	0
Control Delay (s)	Err	11.7	0.0
Lane LOS	F	B	
Approach Delay (s)	Err	11.7	0.0
Approach LOS	F		

Intersection Summary			
Average Delay	1578.9		
Intersection Capacity Utilization	149.6%	ICU Level of Service	H
Analysis Period (min)	15		

Movement	EBL	EBR	NBL	NBT	SBT	SBR
Lane Configurations						
Sign Control	Stop			Free	Free	
Grade	0%			0%	0%	
Volume (veh/h)	128	321	265	697	789	54
Peak Hour Factor	0.95	0.95	0.95	0.95	0.95	0.95
Hourly flow rate (vph)	135	338	279	734	831	57
Pedestrians						
Lane Width (ft)						
Walking Speed (ft/s)						
Percent Blockage						
Right turn flare (veh)						
Median type	None					
Median storage veh)						
Upstream signal (ft)						
pX, platoon unblocked						
vC, conflicting volume	2151	859	887			
vC1, stage 1 conf vol						
vC2, stage 2 conf vol						
vCu, unblocked vol	2151	859	887			
tC, single (s)	6.4	6.2	4.1			
tC, 2 stage (s)						
tF (s)	3.5	3.3	2.2			
p0 queue free %	0	5	63			
cM capacity (veh/h)	34	356	763			

Direction, Lane #	EB 1	NB 1	SB 1
Volume Total	473	1013	887
Volume Left	135	279	0
Volume Right	338	0	57
cSH	95	763	1700
Volume to Capacity	4.96	0.37	0.52
Queue Length 95th (ft)	Err	42	0
Control Delay (s)	Err	9.2	0.0
Lane LOS	F	A	
Approach Delay (s)	Err	9.2	0.0
Approach LOS	F		

Intersection Summary			
Average Delay	1995.7		
Intersection Capacity Utilization	133.0%	ICU Level of Service	H
Analysis Period (min)	15		

Movement	EBL	EBR	NBL	NBT	SBT	SBR
Lane Configurations						
Sign Control	Stop			Free	Free	
Grade	0%			0%	0%	
Volume (veh/h)	108	321	265	560	522	45
Peak Hour Factor	0.95	0.95	0.95	0.95	0.95	0.95
Hourly flow rate (vph)	114	338	279	589	549	47
Pedestrians						
Lane Width (ft)						
Walking Speed (ft/s)						
Percent Blockage						
Right turn flare (veh)						
Median type	None					
Median storage veh)						
Upstream signal (ft)						
pX, platoon unblocked						
vC, conflicting volume	1721	573	597			
vC1, stage 1 conf vol						
vC2, stage 2 conf vol						
vCu, unblocked vol	1721	573	597			
tC, single (s)	6.4	6.2	4.1			
tC, 2 stage (s)						
tF (s)	3.5	3.3	2.2			
p0 queue free %	0	35	72			
cM capacity (veh/h)	70	519	980			

Direction, Lane #	EB 1	NB 1	SB 1
Volume Total	452	868	597
Volume Left	114	279	0
Volume Right	338	0	47
cSH	199	980	1700
Volume to Capacity	2.27	0.28	0.35
Queue Length 95th (ft)	906	29	0
Control Delay (s)	624.4	6.3	0.0
Lane LOS	F	A	
Approach Delay (s)	624.4	6.3	0.0
Approach LOS	F		

Intersection Summary			
Average Delay	149.9		
Intersection Capacity Utilization	110.1%	ICU Level of Service	H
Analysis Period (min)	15		

Movement	EBL	EBT	WBT	WBR	SWL	SWR
Lane Configurations		↑↑	↑↑			↱↱
Sign Control		Free	Free		Stop	
Grade		0%	0%		0%	
Volume (veh/h)	0	869	548	0	0	376
Peak Hour Factor	0.95	0.95	0.95	0.95	0.95	0.95
Hourly flow rate (vph)	0	915	577	0	0	396
Pedestrians						
Lane Width (ft)						
Walking Speed (ft/s)						
Percent Blockage						
Right turn flare (veh)						
Median type					None	
Median storage veh)						
Upstream signal (ft)		411				
pX, platoon unblocked						
vC, conflicting volume	577				1034	288
vC1, stage 1 conf vol						
vC2, stage 2 conf vol						
vCu, unblocked vol	577				1034	288
tC, single (s)	4.1				6.8	6.9
tC, 2 stage (s)						
tF (s)	2.2				3.5	3.3
p0 queue free %	100				100	44
cM capacity (veh/h)	993				228	708

Direction, Lane #	EB 1	EB 2	WB 1	WB 2	SW 1	SW 2
Volume Total	457	457	288	288	198	198
Volume Left	0	0	0	0	0	0
Volume Right	0	0	0	0	198	198
cSH	1700	1700	1700	1700	708	708
Volume to Capacity	0.27	0.27	0.17	0.17	0.28	0.28
Queue Length 95th (ft)	0	0	0	0	29	29
Control Delay (s)	0.0	0.0	0.0	0.0	12.0	12.0
Lane LOS					B	B
Approach Delay (s)	0.0		0.0		12.0	
Approach LOS					B	

Intersection Summary				
Average Delay	2.5			
Intersection Capacity Utilization	35.0%	ICU Level of Service		A
Analysis Period (min)	15			

Movement	EBL	EBR	NBL	NBT	SBT	SBR
Lane Configurations				↑	↑	
Sign Control	Stop			Free	Free	
Grade	0%			0%	0%	
Volume (veh/h)	108	313	222	445	254	56
Peak Hour Factor	0.95	0.95	0.95	0.95	0.95	0.95
Hourly flow rate (vph)	114	329	234	468	267	59
Pedestrians						
Lane Width (ft)						
Walking Speed (ft/s)						
Percent Blockage						
Right turn flare (veh)						
Median type	None					
Median storage veh)						
Upstream signal (ft)						
pX, platoon unblocked						
vC, conflicting volume	1233	297	326			
vC1, stage 1 conf vol						
vC2, stage 2 conf vol						
vCu, unblocked vol	1233	297	326			
tC, single (s)	6.4	6.2	4.1			
tC, 2 stage (s)						
tF (s)	3.5	3.3	2.2			
p0 queue free %	28	56	81			
cM capacity (veh/h)	158	743	1233			

Direction, Lane #	EB 1	NB 1	SB 1
Volume Total	443	702	326
Volume Left	114	234	0
Volume Right	329	0	59
cSH	382	1233	1700
Volume to Capacity	1.16	0.19	0.19
Queue Length 95th (ft)	433	17	0
Control Delay (s)	129.8	4.4	0.0
Lane LOS	F	A	
Approach Delay (s)	129.8	4.4	0.0
Approach LOS	F		

Intersection Summary				
Average Delay	41.2			
Intersection Capacity Utilization	87.7%	ICU Level of Service		E
Analysis Period (min)	15			

Movement	EBL	EBR	NBL	NBT	SBT	SBR
Lane Configurations						
Ideal Flow (vphpl)	1900	1900	1900	1900	1900	1900
Total Lost time (s)	4.0			4.0	4.0	
Lane Util. Factor	0.97			0.95	0.95	
Frt	0.99			1.00	0.99	
Flt Protected	0.95			1.00	1.00	
Satd. Flow (prot)	3427			3537	3482	
Flt Permitted	0.95			0.94	1.00	
Satd. Flow (perm)	3427			3332	3482	
Volume (vph)	107	5	11	947	806	98
Peak-hour factor, PHF	0.95	0.95	0.95	0.95	0.95	0.95
Adj. Flow (vph)	113	5	12	997	848	103
RTOR Reduction (vph)	2	0	0	0	14	0
Lane Group Flow (vph)	116	0	0	1009	937	0
Turn Type			Perm			
Protected Phases	4			2	6	
Permitted Phases			2			
Actuated Green, G (s)	9.5			37.2	37.2	
Effective Green, g (s)	12.5			40.2	40.2	
Actuated g/C Ratio	0.21			0.66	0.66	
Clearance Time (s)	7.0			7.0	7.0	
Vehicle Extension (s)	4.0			3.0	3.0	
Lane Grp Cap (vph)	706			2207	2306	
v/s Ratio Prot	c0.03				0.27	
v/s Ratio Perm				c0.30		
v/c Ratio	0.16			0.46	0.41	
Uniform Delay, d1	19.8			5.0	4.7	
Progression Factor	1.00			1.00	1.00	
Incremental Delay, d2	0.1			0.2	0.1	
Delay (s)	20.0			5.1	4.9	
Level of Service	B			A	A	
Approach Delay (s)	20.0			5.1	4.9	
Approach LOS	B			A	A	

Intersection Summary			
HCM Average Control Delay	5.8	HCM Level of Service	A
HCM Volume to Capacity ratio	0.39		
Actuated Cycle Length (s)	60.7	Sum of lost time (s)	8.0
Intersection Capacity Utilization	48.9%	ICU Level of Service	A
Analysis Period (min)	15		

c Critical Lane Group

Movement	EBL	EBT	EBR	WBL	WBT	WBR	NBL	NBT	NBR	SBL	SBT	SBR
Lane Configurations												
Ideal Flow (vphpl)	1900	1900	1900	1900	1900	1900	1900	1900	1900	1900	1900	1900
Total Lost time (s)	3.0	3.0	3.0	3.0	3.0	3.0	3.0	3.0	3.0	3.0	3.0	3.0
Lane Util. Factor	0.97	0.86	1.00	0.97	0.86	1.00	0.97	0.95	1.00	0.97	0.95	1.00
Frt	1.00	1.00	0.85	1.00	1.00	0.85	1.00	1.00	0.85	1.00	1.00	0.85
Flt Protected	0.95	1.00	1.00	0.95	1.00	1.00	0.95	1.00	1.00	0.95	1.00	1.00
Satd. Flow (prot)	3433	6408	1583	3433	6408	1583	3433	3539	1583	3433	3539	1583
Flt Permitted	0.95	1.00	1.00	0.95	1.00	1.00	0.95	1.00	1.00	0.95	1.00	1.00
Satd. Flow (perm)	3433	6408	1583	3433	6408	1583	3433	3539	1583	3433	3539	1583
Volume (vph)	1545	1802	127	23	1422	853	143	142	32	728	91	1248
Peak-hour factor, PHF	0.95	0.95	0.95	0.95	0.95	0.95	0.95	0.95	0.95	0.95	0.95	0.95
Adj. Flow (vph)	1626	1897	134	24	1497	898	151	149	34	766	96	1314
RTOR Reduction (vph)	0	0	58	0	0	0	0	0	0	0	0	0
Lane Group Flow (vph)	1626	1897	76	24	1497	898	151	149	34	766	96	1314
Turn Type	Prot		Perm	Prot		Free	Prot		Free	Prot		Free
Protected Phases	1	6		5	2		7	4		3	8	
Permitted Phases			6			Free			Free			Free
Actuated Green, G (s)	13.0	78.3	78.3	3.0	68.3	145.0	10.3	6.0	145.0	29.7	25.4	145.0
Effective Green, g (s)	17.0	82.3	82.3	7.0	72.3	145.0	14.3	10.0	145.0	33.7	29.4	145.0
Actuated g/C Ratio	0.12	0.57	0.57	0.05	0.50	1.00	0.10	0.07	1.00	0.23	0.20	1.00
Clearance Time (s)	7.0	7.0	7.0	7.0	7.0		7.0	7.0		7.0	7.0	
Vehicle Extension (s)	2.0	3.0	3.0	2.0	3.0		3.0	3.0		3.0	3.0	
Lane Grp Cap (vph)	402	3637	898	166	3195	1583	339	244	1583	798	718	1583
v/s Ratio Prot	c0.47	0.30		0.01	0.23		0.04	0.04		c0.22	0.03	
v/s Ratio Perm			0.05			0.57			0.02			c0.83
v/c Ratio	4.04	0.52	0.08	0.14	0.47	0.57	0.45	0.61	0.02	0.96	0.13	0.83
Uniform Delay, d1	64.0	19.3	14.2	66.1	23.8	0.0	61.6	65.6	0.0	55.0	47.4	0.0
Progression Factor	1.00	1.00	1.00	1.00	1.00	1.00	1.00	1.00	1.00	1.00	1.00	1.00
Incremental Delay, d2	1376.1	0.5	0.2	0.1	0.5	1.5	0.9	4.5	0.0	22.2	0.1	5.2
Delay (s)	1440.1	19.8	14.4	66.3	24.3	1.5	62.5	70.1	0.0	77.2	47.4	5.2
Level of Service	F	B	B	E	C	A	E	E	A	E	D	A
Approach Delay (s)		651.1			16.2			59.5			32.4	
Approach LOS		F			B			E			C	

Intersection Summary			
HCM Average Control Delay	292.4	HCM Level of Service	F
HCM Volume to Capacity ratio	1.23		
Actuated Cycle Length (s)	145.0	Sum of lost time (s)	3.0
Intersection Capacity Utilization	103.8%	ICU Level of Service	G
Analysis Period (min)	15		

c Critical Lane Group

Movement	WBL	WBR	NBT	NBR	SBL	SBT
Lane Configurations						
Ideal Flow (vphpl)	1900	1900	1900	1900	1900	1900
Total Lost time (s)	4.0	4.0	4.0		4.0	4.0
Lane Util. Factor	1.00	1.00	1.00		1.00	1.00
Frt	1.00	0.85	0.98		1.00	1.00
Flt Protected	0.95	1.00	1.00		0.95	1.00
Satd. Flow (prot)	1770	1583	1833		1770	1863
Flt Permitted	0.95	1.00	1.00		0.04	1.00
Satd. Flow (perm)	1770	1583	1833		69	1863
Volume (vph)	80	517	1050	139	389	662
Peak-hour factor, PHF	0.95	0.95	0.95	0.95	0.95	0.95
Adj. Flow (vph)	84	544	1105	146	409	697
RTOR Reduction (vph)	0	112	3	0	0	0
Lane Group Flow (vph)	84	432	1248	0	409	697
Turn Type		Perm			Perm	
Protected Phases	8		2			6
Permitted Phases		8			6	
Actuated Green, G (s)	31.0	31.0	105.0		105.0	105.0
Effective Green, g (s)	34.0	34.0	108.0		108.0	108.0
Actuated g/C Ratio	0.23	0.23	0.72		0.72	0.72
Clearance Time (s)	7.0	7.0	7.0		7.0	7.0
Vehicle Extension (s)	2.0	2.0	2.0		2.0	2.0
Lane Grp Cap (vph)	401	359	1320		50	1341
v/s Ratio Prot	0.05		0.68			0.37
v/s Ratio Perm		c0.27			c5.93	
v/c Ratio	0.21	1.20	0.95		8.18	0.52
Uniform Delay, d1	47.1	58.0	18.4		21.0	9.4
Progression Factor	1.00	1.00	1.00		1.00	1.00
Incremental Delay, d2	0.1	114.9	13.6		3271.5	0.1
Delay (s)	47.2	172.9	32.0		3292.5	9.5
Level of Service	D	F	C		F	A
Approach Delay (s)	156.1		32.0			1223.6
Approach LOS	F		C			F

Intersection Summary			
HCM Average Control Delay	499.6	HCM Level of Service	F
HCM Volume to Capacity ratio	6.55		
Actuated Cycle Length (s)	150.0	Sum of lost time (s)	8.0
Intersection Capacity Utilization	103.6%	ICU Level of Service	G
Analysis Period (min)	15		

c Critical Lane Group

Movement	WBL	WBR	NBT	NBR	SBL	SBT
Lane Configurations						
Sign Control	Stop		Free			Free
Grade	0%		0%			0%
Volume (veh/h)	0	57	1062	142	0	742
Peak Hour Factor	0.95	0.95	0.95	0.95	0.95	0.95
Hourly flow rate (vph)	0	60	1118	149	0	781
Pedestrians						
Lane Width (ft)						
Walking Speed (ft/s)						
Percent Blockage						
Right turn flare (veh)						
Median type	None					
Median storage veh)						
Upstream signal (ft)						850
pX, platoon unblocked	0.81					
vC, conflicting volume	1974	1193			1267	
vC1, stage 1 conf vol						
vC2, stage 2 conf vol						
vCu, unblocked vol	2207	1193			1267	
tC, single (s)	6.4	6.2			4.1	
tC, 2 stage (s)						
tF (s)	3.5	3.3			2.2	
p0 queue free %	100	74			100	
cM capacity (veh/h)	39	228			548	

Direction, Lane #	WB 1	NB 1	SB 1
Volume Total	60	1267	781
Volume Left	0	0	0
Volume Right	60	149	0
cSH	228	1700	1700
Volume to Capacity	0.26	0.75	0.46
Queue Length 95th (ft)	26	0	0
Control Delay (s)	26.4	0.0	0.0
Lane LOS	D		
Approach Delay (s)	26.4	0.0	0.0
Approach LOS	D		

Intersection Summary			
Average Delay	0.8		
Intersection Capacity Utilization	74.7%	ICU Level of Service	D
Analysis Period (min)	15		

Movement	WBL	WBR	NBT	NBR	SBL	SBT
Lane Configurations						
Sign Control	Stop		Free			Free
Grade	0%		0%			0%
Volume (veh/h)	90	60	1145	51	76	666
Peak Hour Factor	0.95	0.95	0.95	0.95	0.95	0.95
Hourly flow rate (vph)	95	63	1205	54	80	701
Pedestrians						
Lane Width (ft)						
Walking Speed (ft/s)						
Percent Blockage						
Right turn flare (veh)						
Median type	None					
Median storage veh)						
Upstream signal (ft)						
pX, platoon unblocked						
vC, conflicting volume	2093	1232			1259	
vC1, stage 1 conf vol						
vC2, stage 2 conf vol						
vCu, unblocked vol	2093	1232			1259	
tC, single (s)	6.4	6.2			4.1	
tC, 2 stage (s)						
tF (s)	3.5	3.3			2.2	
p0 queue free %	0	71			86	
cM capacity (veh/h)	49	216			552	

Direction, Lane #	WB 1	NB 1	SB 1
Volume Total	158	1259	781
Volume Left	95	0	80
Volume Right	63	54	0
cSH	71	1700	552
Volume to Capacity	2.22	0.74	0.14
Queue Length 95th (ft)	371	0	13
Control Delay (s)	684.2	0.0	4.1
Lane LOS	F		A
Approach Delay (s)	684.2	0.0	4.1
Approach LOS	F		

Intersection Summary			
Average Delay	50.6		
Intersection Capacity Utilization	113.9%	ICU Level of Service	H
Analysis Period (min)	15		

Movement	WBL	WBR	NBT	NBR	SBL	SBT
Lane Configurations						
Sign Control	Stop		Free			Free
Grade	0%		0%			0%
Volume (veh/h)	0	10	1504	63	0	1051
Peak Hour Factor	0.95	0.95	0.95	0.95	0.95	0.95
Hourly flow rate (vph)	0	11	1583	66	0	1106
Pedestrians						
Lane Width (ft)						
Walking Speed (ft/s)						
Percent Blockage						
Right turn flare (veh)						
Median type	None					
Median storage veh)						
Upstream signal (ft)			844			
pX, platoon unblocked	0.32	0.32			0.32	
vC, conflicting volume	2723	1616			1649	
vC1, stage 1 conf vol						
vC2, stage 2 conf vol						
vCu, unblocked vol	6384	2926			3030	
tC, single (s)	6.4	6.2			4.1	
tC, 2 stage (s)						
tF (s)	3.5	3.3			2.2	
p0 queue free %	100	0			100	
cM capacity (veh/h)	0	6			36	

Direction, Lane #	WB 1	NB 1	SB 1
Volume Total	11	1649	1106
Volume Left	0	0	0
Volume Right	11	66	0
cSH	6	1700	1700
Volume to Capacity	1.65	0.97	0.65
Queue Length 95th (ft)	57	0	0
Control Delay (s)	1374.3	0.0	0.0
Lane LOS	F		
Approach Delay (s)	1374.3	0.0	0.0
Approach LOS	F		

Intersection Summary			
Average Delay	5.2		
Intersection Capacity Utilization	93.0%	ICU Level of Service	F
Analysis Period (min)	15		

Movement	WBL	WBR	NBT	NBR	SBL	SBT
Lane Configurations						
Sign Control	Stop		Free			Free
Grade	0%		0%			0%
Volume (veh/h)	0	10	1451	63	0	1051
Peak Hour Factor	0.95	0.95	0.95	0.95	0.95	0.95
Hourly flow rate (vph)	0	11	1527	66	0	1106
Pedestrians						
Lane Width (ft)						
Walking Speed (ft/s)						
Percent Blockage						
Right turn flare (veh)						
Median type	None					
Median storage veh)						
Upstream signal (ft)						
pX, platoon unblocked						
vC, conflicting volume	2667	1561			1594	
vC1, stage 1 conf vol						
vC2, stage 2 conf vol						
vCu, unblocked vol	2667	1561			1594	
tC, single (s)	6.4	6.2			4.1	
tC, 2 stage (s)						
tF (s)	3.5	3.3			2.2	
p0 queue free %	100	92			100	
cM capacity (veh/h)	25	138			411	

Direction, Lane #	WB 1	NB 1	SB 1
Volume Total	11	1594	1106
Volume Left	0	0	0
Volume Right	11	66	0
cSH	138	1700	1700
Volume to Capacity	0.08	0.94	0.65
Queue Length 95th (ft)	6	0	0
Control Delay (s)	33.2	0.0	0.0
Lane LOS	D		
Approach Delay (s)	33.2	0.0	0.0
Approach LOS	D		

Intersection Summary			
Average Delay	0.1		
Intersection Capacity Utilization	90.2%	ICU Level of Service	E
Analysis Period (min)	15		

Movement	EBL	EBT	EBR	WBL	WBT	WBR	NBL	NBT	NBR	SBL	SBT	SBR
Lane Configurations												
Sign Control		Stop			Stop			Free			Free	
Grade		0%			0%			0%			0%	
Volume (veh/h)	0	0	87	0	0	10	0	1436	25	0	964	54
Peak Hour Factor	0.95	0.95	0.95	0.95	0.95	0.95	0.95	0.95	0.95	0.95	0.95	0.95
Hourly flow rate (vph)	0	0	92	0	0	11	0	1512	26	0	1015	57
Pedestrians												
Lane Width (ft)												
Walking Speed (ft/s)												
Percent Blockage												
Right turn flare (veh)												
Median type		None			None							
Median storage veh)												
Upstream signal (ft)												
pX, platoon unblocked												
vC, conflicting volume	2578	2581	1043	2659	2596	1525	1072			1538		
vC1, stage 1 conf vol												
vC2, stage 2 conf vol												
vCu, unblocked vol	2578	2581	1043	2659	2596	1525	1072			1538		
tC, single (s)	7.1	6.5	6.2	7.1	6.5	6.2	4.1			4.1		
tC, 2 stage (s)												
tF (s)	3.5	4.0	3.3	3.5	4.0	3.3	2.2			2.2		
p0 queue free %	100	100	67	100	100	93	100			100		
cM capacity (veh/h)	16	26	279	10	25	145	650			432		

Direction, Lane #	EB 1	WB 1	NB 1	SB 1
Volume Total	92	11	1538	1072
Volume Left	0	0	0	0
Volume Right	92	11	26	57
cSH	279	145	1700	1700
Volume to Capacity	0.33	0.07	0.90	0.63
Queue Length 95th (ft)	35	6	0	0
Control Delay (s)	24.1	31.8	0.0	0.0
Lane LOS	C	D		
Approach Delay (s)	24.1	31.8	0.0	0.0
Approach LOS	C	D		

Intersection Summary			
Average Delay	0.9		
Intersection Capacity Utilization	87.1%	ICU Level of Service	E
Analysis Period (min)	15		

Movement	EBL	EBR	NBL	NBT	SBT	SBR
Lane Configurations						
Sign Control	Stop			Free	Free	
Grade	0%			0%	0%	
Volume (veh/h)	0	97	0	1446	920	79
Peak Hour Factor	0.95	0.95	0.95	0.95	0.95	0.95
Hourly flow rate (vph)	0	102	0	1522	968	83
Pedestrians						
Lane Width (ft)						
Walking Speed (ft/s)						
Percent Blockage						
Right turn flare (veh)						
Median type	None					
Median storage veh)						
Upstream signal (ft)						
pX, platoon unblocked						
vC, conflicting volume	2532	1010	1052			
vC1, stage 1 conf vol						
vC2, stage 2 conf vol						
vCu, unblocked vol	2532	1010	1052			
tC, single (s)	6.4	6.2	4.1			
tC, 2 stage (s)						
tF (s)	3.5	3.3	2.2			
p0 queue free %	100	65	100			
cM capacity (veh/h)	30	291	662			

Direction, Lane #	EB 1	NB 1	SB 1
Volume Total	102	1522	1052
Volume Left	0	0	0
Volume Right	102	0	83
cSH	291	662	1700
Volume to Capacity	0.35	0.00	0.62
Queue Length 95th (ft)	33	0	0
Control Delay (s)	23.9	0.0	0.0
Lane LOS	C		
Approach Delay (s)	23.9	0.0	0.0
Approach LOS	C		

Intersection Summary			
Average Delay	0.9		
Intersection Capacity Utilization	88.8%	ICU Level of Service	E
Analysis Period (min)	15		

Movement	EBL	EBR	NBL	NBT	SBT	SBR
Lane Configurations						
Sign Control	Stop			Free	Free	
Grade	0%			0%	0%	
Volume (veh/h)	44	190	240	1205	809	51
Peak Hour Factor	0.95	0.95	0.95	0.95	0.95	0.95
Hourly flow rate (vph)	46	200	253	1268	852	54
Pedestrians						
Lane Width (ft)						
Walking Speed (ft/s)						
Percent Blockage						
Right turn flare (veh)						
Median type	None					
Median storage veh)						
Upstream signal (ft)						
pX, platoon unblocked						
vC, conflicting volume	2652	878	905			
vC1, stage 1 conf vol						
vC2, stage 2 conf vol						
vCu, unblocked vol	2652	878	905			
tC, single (s)	6.4	6.2	4.1			
tC, 2 stage (s)						
tF (s)	3.5	3.3	2.2			
p0 queue free %	0	42	66			
cM capacity (veh/h)	17	347	751			

Direction, Lane #	EB 1	NB 1	SB 1
Volume Total	246	1521	905
Volume Left	46	253	0
Volume Right	200	0	54
cSH	74	751	1700
Volume to Capacity	3.33	0.34	0.53
Queue Length 95th (ft)	Err	37	0
Control Delay (s)	Err	15.5	0.0
Lane LOS	F	C	
Approach Delay (s)	Err	15.5	0.0
Approach LOS	F		

Intersection Summary			
Average Delay	930.3		
Intersection Capacity Utilization	146.5%	ICU Level of Service	H
Analysis Period (min)	15		

Movement	EBL	EBR	NBL	NBT	SBT	SBR
Lane Configurations						
Sign Control	Stop			Free	Free	
Grade	0%			0%	0%	
Volume (veh/h)	64	236	571	679	623	165
Peak Hour Factor	0.95	0.95	0.95	0.95	0.95	0.95
Hourly flow rate (vph)	67	248	601	715	656	174
Pedestrians						
Lane Width (ft)						
Walking Speed (ft/s)						
Percent Blockage						
Right turn flare (veh)						
Median type	None					
Median storage veh)						
Upstream signal (ft)						
pX, platoon unblocked						
vC, conflicting volume	2659	743	829			
vC1, stage 1 conf vol						
vC2, stage 2 conf vol						
vCu, unblocked vol	2659	743	829			
tC, single (s)	6.4	6.2	4.1			
tC, 2 stage (s)						
tF (s)	3.5	3.3	2.2			
p0 queue free %	0	40	25			
cM capacity (veh/h)	6	415	802			

Direction, Lane #	EB 1	NB 1	SB 1
Volume Total	316	1316	829
Volume Left	67	601	0
Volume Right	248	0	174
cSH	28	802	1700
Volume to Capacity	11.33	0.75	0.49
Queue Length 95th (ft)	Err	175	0
Control Delay (s)	Err	25.0	0.0
Lane LOS	F	D	
Approach Delay (s)	Err	25.0	0.0
Approach LOS	F		

Intersection Summary			
Average Delay	1296.4		
Intersection Capacity Utilization	138.2%	ICU Level of Service	H
Analysis Period (min)	15		

Movement	EBL	EBR	NBL	NBT	SBT	SBR
Lane Configurations						
Sign Control	Stop			Free	Free	
Grade	0%			0%	0%	
Volume (veh/h)	49	225	282	461	565	56
Peak Hour Factor	0.95	0.95	0.95	0.95	0.95	0.95
Hourly flow rate (vph)	52	237	297	485	595	59
Pedestrians						
Lane Width (ft)						
Walking Speed (ft/s)						
Percent Blockage						
Right turn flare (veh)						
Median type	None					
Median storage veh)						
Upstream signal (ft)						
pX, platoon unblocked						
vC, conflicting volume	1703	624	654			
vC1, stage 1 conf vol						
vC2, stage 2 conf vol						
vCu, unblocked vol	1703	624	654			
tC, single (s)	6.4	6.2	4.1			
tC, 2 stage (s)						
tF (s)	3.5	3.3	2.2			
p0 queue free %	25	51	68			
cM capacity (veh/h)	69	485	933			

Direction, Lane #	EB 1	NB 1	SB 1
Volume Total	288	782	654
Volume Left	52	297	0
Volume Right	237	0	59
cSH	233	933	1700
Volume to Capacity	1.24	0.32	0.38
Queue Length 95th (ft)	361	34	0
Control Delay (s)	181.4	7.0	0.0
Lane LOS	F	A	
Approach Delay (s)	181.4	7.0	0.0
Approach LOS	F		

Intersection Summary			
Average Delay	33.5		
Intersection Capacity Utilization	99.6%	ICU Level of Service	F
Analysis Period (min)	15		

Movement	EBL	EBT	WBT	WBR	SWL	SWR
Lane Configurations		↑↑	↑↑			↱↱
Sign Control		Free	Free		Stop	
Grade		0%	0%		0%	
Volume (veh/h)	0	520	223	0	0	373
Peak Hour Factor	0.95	0.95	0.95	0.95	0.95	0.95
Hourly flow rate (vph)	0	547	235	0	0	393
Pedestrians						
Lane Width (ft)						
Walking Speed (ft/s)						
Percent Blockage						
Right turn flare (veh)						
Median type					None	
Median storage veh)						
Upstream signal (ft)		411				
pX, platoon unblocked						
vC, conflicting volume	235				508	117
vC1, stage 1 conf vol						
vC2, stage 2 conf vol						
vCu, unblocked vol	235				508	117
tC, single (s)	4.1				6.8	6.9
tC, 2 stage (s)						
tF (s)	2.2				3.5	3.3
p0 queue free %	100				100	57
cM capacity (veh/h)	1330				494	912

Direction, Lane #	EB 1	EB 2	WB 1	WB 2	SW 1	SW 2
Volume Total	274	274	117	117	196	196
Volume Left	0	0	0	0	0	0
Volume Right	0	0	0	0	196	196
cSH	1700	1700	1700	1700	912	912
Volume to Capacity	0.16	0.16	0.07	0.07	0.22	0.22
Queue Length 95th (ft)	0	0	0	0	20	20
Control Delay (s)	0.0	0.0	0.0	0.0	10.0	10.0
Lane LOS					B	B
Approach Delay (s)	0.0		0.0		10.0	
Approach LOS					B	

Intersection Summary			
Average Delay	3.4		
Intersection Capacity Utilization	25.9%	ICU Level of Service	A
Analysis Period (min)	15		

Movement	EBL	EBR	NBL	NBT	SBT	SBR
Lane Configurations	↰			↑	↑	
Sign Control	Stop			Free	Free	
Grade	0%			0%	0%	
Volume (veh/h)	49	216	245	265	405	64
Peak Hour Factor	0.95	0.95	0.95	0.95	0.95	0.95
Hourly flow rate (vph)	52	227	258	279	426	67
Pedestrians						
Lane Width (ft)						
Walking Speed (ft/s)						
Percent Blockage						
Right turn flare (veh)						
Median type	None					
Median storage veh)						
Upstream signal (ft)						
pX, platoon unblocked						
vC, conflicting volume	1255	460	494			
vC1, stage 1 conf vol						
vC2, stage 2 conf vol						
vCu, unblocked vol	1255	460	494			
tC, single (s)	6.4	6.2	4.1			
tC, 2 stage (s)						
tF (s)	3.5	3.3	2.2			
p0 queue free %	64	62	76			
cM capacity (veh/h)	144	601	1070			

Direction, Lane #	EB 1	NB 1	SB 1
Volume Total	279	537	494
Volume Left	52	258	0
Volume Right	227	0	67
cSH	379	1070	1700
Volume to Capacity	0.74	0.24	0.29
Queue Length 95th (ft)	144	24	0
Control Delay (s)	36.9	5.9	0.0
Lane LOS	E	A	
Approach Delay (s)	36.9	5.9	0.0
Approach LOS	E		

Intersection Summary			
Average Delay	10.3		
Intersection Capacity Utilization	78.7%	ICU Level of Service	D
Analysis Period (min)	15		

HCM Signalized Intersection Capacity Analysis
5: Route 7 & Countryside Blvd.

Kincora
Total Future 2015

Movement	EBL	EBT	EBR	WBL	WBT	WBR	NBL	NBT	NBR	SBL	SBT	SBR
Lane Configurations												
Ideal Flow (vphpl)	1900	1900	1900	1900	1900	1900	1900	1900	1900	1900	1900	1900
Total Lost time (s)	3.0	3.0	3.0	3.0	3.0	3.0	3.0	3.0	3.0	3.0	3.0	3.0
Lane Util. Factor	0.97	0.86	1.00	0.97	0.86	1.00	0.97	0.95	1.00	0.97	0.95	1.00
Frt	1.00	1.00	0.85	1.00	1.00	0.85	1.00	1.00	0.85	1.00	1.00	0.85
Flt Protected	0.95	1.00	1.00	0.95	1.00	1.00	0.95	1.00	1.00	0.95	1.00	1.00
Satd. Flow (prot)	3433	6408	1583	3433	6408	1583	3433	3539	1583	3433	3539	1583
Flt Permitted	0.95	1.00	1.00	0.95	1.00	1.00	0.95	1.00	1.00	0.95	1.00	1.00
Satd. Flow (perm)	3433	6408	1583	3433	6408	1583	3433	3539	1583	3433	3539	1583
Volume (vph)	300	3193	135	119	2169	109	81	70	151	165	94	289
Peak-hour factor, PHF	0.95	0.95	0.95	0.95	0.95	0.95	0.95	0.95	0.95	0.95	0.95	0.95
Adj. Flow (vph)	316	3361	142	125	2283	114	85	74	159	174	99	304
RTOR Reduction (vph)	0	0	0	0	0	41	0	0	0	0	0	40
Lane Group Flow (vph)	316	3361	142	125	2283	73	85	74	159	174	99	264
Turn Type	Prot		Free	Prot		pm+ov	Prot		Free	Prot		pm+ov
Protected Phases	1	6		5	2	3	7	4		3	8	1
Permitted Phases			Free			2			Free			8
Actuated Green, G (s)	16.7	82.2	150.0	10.5	76.0	88.0	8.2	17.3	150.0	12.0	21.1	37.8
Effective Green, g (s)	20.7	86.2	150.0	14.5	80.0	96.0	12.2	21.3	150.0	16.0	25.1	45.8
Actuated g/C Ratio	0.14	0.57	1.00	0.10	0.53	0.64	0.08	0.14	1.00	0.11	0.17	0.31
Clearance Time (s)	7.0	7.0		7.0	7.0	7.0	7.0	7.0		7.0	7.0	7.0
Vehicle Extension (s)	2.0	2.0		3.0	2.0	2.0	2.0	2.0		2.0	2.0	2.0
Lane Grp Cap (vph)	474	3682	1583	332	3418	1045	279	503	1583	366	592	515
v/s Ratio Prot	c0.09	c0.52		0.04	0.36	0.01	0.02	0.02		c0.05	0.03	c0.07
v/s Ratio Perm			0.09			0.04			0.10			0.10
v/c Ratio	0.67	0.91	0.09	0.38	0.67	0.07	0.30	0.15	0.10	0.48	0.17	0.51
Uniform Delay, d1	61.4	28.5	0.0	63.5	25.4	10.2	64.9	56.4	0.0	63.1	53.5	42.9
Progression Factor	1.00	1.00	1.00	1.00	1.00	1.00	1.00	1.00	1.00	1.00	1.00	1.00
Incremental Delay, d2	2.7	4.6	0.1	0.7	1.1	0.0	0.2	0.0	0.1	0.4	0.0	0.4
Delay (s)	64.1	33.1	0.1	64.2	26.4	10.2	65.1	56.4	0.1	63.4	53.5	43.3
Level of Service	E	C	A	E	C	B	E	E	A	E	D	D
Approach Delay (s)		34.5			27.6			30.6			51.1	
Approach LOS		C			C			C			D	

Intersection Summary			
HCM Average Control Delay	33.2	HCM Level of Service	C
HCM Volume to Capacity ratio	0.76		
Actuated Cycle Length (s)	150.0	Sum of lost time (s)	6.0
Intersection Capacity Utilization	72.6%	ICU Level of Service	C
Analysis Period (min)	15		

c Critical Lane Group

HCM Signalized Intersection Capacity Analysis
6: Route 7 & Palisade Parkway

Kincora
Total Future 2015

Movement	EBL	EBT	EBR	WBL	WBT	WBR	NBL	NBT	NBR	SBL	SBT	SBR
Lane Configurations												
Ideal Flow (vphpl)	1900	1900	1900	1900	1900	1900	1900	1900	1900	1900	1900	1900
Total Lost time (s)	3.0	3.0	3.0	3.0	3.0	3.0	3.0	3.0	3.0	3.0	3.0	3.0
Lane Util. Factor	0.97	0.86	1.00	1.00	0.86	1.00	0.97	1.00	1.00	0.97	1.00	1.00
Frt	1.00	1.00	0.85	1.00	1.00	0.85	1.00	1.00	0.85	1.00	1.00	0.85
Flt Protected	0.95	1.00	1.00	0.95	1.00	1.00	0.95	1.00	1.00	0.95	1.00	1.00
Satd. Flow (prot)	3433	6408	1583	1770	6408	1583	3433	1863	1583	3433	1863	1583
Flt Permitted	0.95	1.00	1.00	0.95	1.00	1.00	0.95	1.00	1.00	0.95	1.00	1.00
Satd. Flow (perm)	3433	6408	1583	1770	6408	1583	3433	1863	1583	3433	1863	1583
Volume (vph)	162	2925	381	123	2115	73	58	34	42	131	82	208
Peak-hour factor, PHF	0.95	0.95	0.95	0.95	0.95	0.95	0.95	0.95	0.95	0.95	0.95	0.95
Adj. Flow (vph)	171	3079	401	129	2226	77	61	36	44	138	86	219
RTOR Reduction (vph)	0	0	0	0	0	0	0	0	9	0	0	31
Lane Group Flow (vph)	171	3079	401	129	2226	77	61	36	35	138	86	188
Turn Type	Prot		Free	Prot		Free	Prot		pm+ov	Prot		pm+ov
Protected Phases	1	6		5	2		7	4	5	3	8	1
Permitted Phases			Free			Free			4			8
Actuated Green, G (s)	10.8	65.9	120.0	11.5	66.6	120.0	4.8	5.4	16.9	9.2	9.8	20.6
Effective Green, g (s)	14.8	69.9	120.0	15.5	70.6	120.0	8.8	9.4	24.9	13.2	13.8	28.6
Actuated g/C Ratio	0.12	0.58	1.00	0.13	0.59	1.00	0.07	0.08	0.21	0.11	0.12	0.24
Clearance Time (s)	7.0	7.0		7.0	7.0		7.0	7.0	7.0	7.0	7.0	7.0
Vehicle Extension (s)	2.0	4.0		2.0	4.0		3.0	3.0	2.0	3.0	3.0	2.0
Lane Grp Cap (vph)	423	3733	1583	229	3770	1583	252	146	368	378	214	417
v/s Ratio Prot	0.05	c0.48		c0.07	0.35		0.02	0.02	0.01	c0.04	0.05	c0.06
v/s Ratio Perm			c0.25			0.05			0.01			0.06
v/c Ratio	0.40	0.82	0.25	0.56	0.59	0.05	0.24	0.25	0.10	0.37	0.40	0.45
Uniform Delay, d1	48.5	20.1	0.0	49.1	15.6	0.0	52.5	52.0	38.4	49.5	49.3	39.0
Progression Factor	1.00	1.00	1.00	1.00	1.00	1.00	1.00	1.00	1.00	1.00	1.00	1.00
Incremental Delay, d2	0.2	2.2	0.4	1.9	0.7	0.1	0.5	0.9	0.0	0.6	1.2	0.3
Delay (s)	48.8	22.3	0.4	51.0	16.3	0.1	53.0	52.9	38.5	50.1	50.5	39.3
Level of Service	D	C	A	D	B	A	D	D	D	D	D	D
Approach Delay (s)		21.2			17.6			48.4			44.8	
Approach LOS		C			B			D			D	

Intersection Summary			
HCM Average Control Delay	22.0	HCM Level of Service	C
HCM Volume to Capacity ratio	0.69		
Actuated Cycle Length (s)	120.0	Sum of lost time (s)	9.0
Intersection Capacity Utilization	69.6%	ICU Level of Service	C
Analysis Period (min)	15		

c Critical Lane Group

HCM Signalized Intersection Capacity Analysis
7: Countryside Blvd. & Algonkian Parkway

Kincora
Total Future 2015

Movement	WBL	WBR	NBT	NBR	SBL	SBT
Lane Configurations						
Ideal Flow (vphpl)	1900	1900	1900	1900	1900	1900
Total Lost time (s)	3.0	3.0	3.0		3.0	3.0
Lane Util. Factor	1.00	1.00	0.95		1.00	0.95
Frt	1.00	0.85	0.97		1.00	1.00
Flt Protected	0.95	1.00	1.00		0.95	1.00
Satd. Flow (prot)	1770	1583	3442		1770	3539
Flt Permitted	0.95	1.00	1.00		0.44	1.00
Satd. Flow (perm)	1770	1583	3442		811	3539
Volume (vph)	89	191	315	70	159	586
Peak-hour factor, PHF	0.95	0.95	0.95	0.95	0.95	0.95
Adj. Flow (vph)	94	201	332	74	167	617
RTOR Reduction (vph)	0	123	16	0	0	0
Lane Group Flow (vph)	94	78	390	0	167	617
Turn Type		pm+ov			pm+pt	
Protected Phases	4	1	2		1	6
Permitted Phases		4			6	
Actuated Green, G (s)	4.9	12.4	18.5		33.0	33.0
Effective Green, g (s)	8.9	20.4	23.0		37.5	37.5
Actuated g/C Ratio	0.17	0.39	0.44		0.72	0.72
Clearance Time (s)	7.0	7.0	7.5		7.0	7.5
Vehicle Extension (s)	2.0	2.0	2.0		2.0	2.0
Lane Grp Cap (vph)	301	707	1511		791	2533
v/s Ratio Prot	c0.05	0.02	0.11		0.05	c0.17
v/s Ratio Perm		0.03			0.10	
v/c Ratio	0.31	0.11	0.26		0.21	0.24
Uniform Delay, d1	19.1	10.2	9.3		2.5	2.6
Progression Factor	1.00	1.00	1.00		1.00	1.00
Incremental Delay, d2	0.2	0.0	0.0		0.0	0.0
Delay (s)	19.3	10.2	9.3		2.6	2.6
Level of Service	B	B	A		A	A
Approach Delay (s)	13.1		9.3			2.6
Approach LOS	B		A			A

Intersection Summary

HCM Average Control Delay	6.5	HCM Level of Service	A
HCM Volume to Capacity ratio	0.26		
Actuated Cycle Length (s)	52.4	Sum of lost time (s)	6.0
Intersection Capacity Utilization	37.1%	ICU Level of Service	A
Analysis Period (min)	15		

c Critical Lane Group

HCM Signalized Intersection Capacity Analysis
8: Winding Road & Algonkian Parkway

Kincora
Total Future 2015

Movement	EBL	EBT	EBR	WBL	WBT	WBR	NBL	NBT	NBR	SBL	SBT	SBR
Lane Configurations												
Ideal Flow (vphpl)	1900	1900	1900	1900	1900	1900	1900	1900	1900	1900	1900	1900
Total Lost time (s)		4.0	4.0		4.0	4.0	4.0	4.0	4.0	4.0	4.0	4.0
Lane Util. Factor		1.00	1.00		1.00	1.00	1.00	0.95	1.00	1.00	0.95	1.00
Frt		1.00	0.85		1.00	0.85	1.00	1.00	0.85	1.00	1.00	0.85
Flt Protected		0.95	1.00		0.96	1.00	0.95	1.00	1.00	0.95	1.00	1.00
Satd. Flow (prot)		1778	1583		1783	1583	1770	3539	1583	1770	3539	1583
Flt Permitted		0.67	1.00		0.72	1.00	0.32	1.00	1.00	0.57	1.00	1.00
Satd. Flow (perm)		1257	1583		1335	1583	603	3539	1583	1063	3539	1583
Volume (vph)	41	2	145	71	9	38	35	282	15	9	720	39
Peak-hour factor, PHF	0.95	0.95	0.95	0.95	0.95	0.95	0.95	0.95	0.95	0.95	0.95	0.95
Adj. Flow (vph)	43	2	153	75	9	40	37	297	16	9	758	41
RTOR Reduction (vph)	0	0	132	0	0	35	0	0	5	0	0	14
Lane Group Flow (vph)	0	45	21	0	84	5	37	297	11	9	758	27
Turn Type	Perm		Perm	Perm		Perm	pm+pt		Perm	pm+pt		Perm
Protected Phases		4			8		5	2		1	6	
Permitted Phases	4		4	8		8	2		2	6		6
Actuated Green, G (s)		9.3	9.3		9.3	9.3	61.9	58.7	58.7	57.5	56.5	56.5
Effective Green, g (s)		12.3	12.3		12.3	12.3	67.9	61.7	61.7	63.5	59.5	59.5
Actuated g/C Ratio		0.14	0.14		0.14	0.14	0.75	0.69	0.69	0.71	0.66	0.66
Clearance Time (s)		7.0	7.0		7.0	7.0	7.0	7.0	7.0	7.0	7.0	7.0
Vehicle Extension (s)		2.0	2.0		2.0	2.0	2.0	2.0	2.0	2.0	2.0	2.0
Lane Grp Cap (vph)		172	216		182	216	535	2426	1085	781	2340	1047
v/s Ratio Prot							c0.00	0.08		0.00	c0.21	
v/s Ratio Perm		0.04	0.01		c0.06	0.00	0.05		0.01	0.01		0.02
v/c Ratio		0.26	0.10		0.46	0.03	0.07	0.12	0.01	0.01	0.32	0.03
Uniform Delay, d1		34.8	34.0		35.8	33.7	3.0	4.9	4.5	3.9	6.6	5.3
Progression Factor		1.00	1.00		1.00	1.00	1.00	1.00	1.00	1.00	1.00	1.00
Incremental Delay, d2		0.3	0.1		0.7	0.0	0.0	0.1	0.0	0.0	0.4	0.0
Delay (s)		35.1	34.1		36.5	33.7	3.1	5.0	4.5	3.9	6.9	5.3
Level of Service		D	C		D	C	A	A	A	A	A	A
Approach Delay (s)		34.3			35.6			4.7			6.8	
Approach LOS		C			D			A			A	

Intersection Summary

HCM Average Control Delay	12.4	HCM Level of Service	B
HCM Volume to Capacity ratio	0.34		
Actuated Cycle Length (s)	90.0	Sum of lost time (s)	16.0
Intersection Capacity Utilization	44.3%	ICU Level of Service	A
Analysis Period (min)	15		

c Critical Lane Group

Movement	EBL	EBT	EBR	WBL	WBT	WBR	NBL	NBT	NBR	SBL	SBT	SBR
Lane Configurations												
Ideal Flow (vphpl)	1900	1900	1900	1900	1900	1900	1900	1900	1900	1900	1900	1900
Total Lost time (s)	3.0	3.0	3.0	3.0	3.0	3.0	3.0	3.0	3.0	3.0	3.0	3.0
Lane Util. Factor	1.00	0.95	1.00	0.97	0.95	1.00	0.97	0.95	1.00	0.97	0.95	1.00
Frt	1.00	1.00	0.85	1.00	1.00	0.85	1.00	1.00	0.85	1.00	1.00	0.85
Flt Protected	0.95	1.00	1.00	0.95	1.00	1.00	0.95	1.00	1.00	0.95	1.00	1.00
Satd. Flow (prot)	1770	3539	1583	3433	3539	1583	3433	3539	1583	3433	3539	1583
Flt Permitted	0.95	1.00	1.00	0.95	1.00	1.00	0.95	1.00	1.00	0.95	1.00	1.00
Satd. Flow (perm)	1770	3539	1583	3433	3539	1583	3433	3539	1583	3433	3539	1583
Volume (vph)	257	383	394	205	150	157	217	654	296	318	470	65
Peak-hour factor, PHF	0.95	0.95	0.95	0.95	0.95	0.95	0.95	0.95	0.95	0.95	0.95	0.95
Adj. Flow (vph)	271	403	415	216	158	165	228	688	312	335	495	68
RTOR Reduction (vph)	0	0	0	0	0	0	0	0	0	0	0	0
Lane Group Flow (vph)	271	403	415	216	158	165	228	688	312	335	495	68
Turn Type	Prot		Free	Prot		Free	Prot		Free	Prot		Free
Protected Phases	7	4		3	8		5	2		1	6	
Permitted Phases			Free			Free			Free			Free
Actuated Green, G (s)	20.3	24.5	111.9	12.4	16.6	111.9	12.8	31.4	111.9	15.6	34.2	111.9
Effective Green, g (s)	24.3	28.5	111.9	16.4	20.6	111.9	16.8	35.4	111.9	19.6	38.2	111.9
Actuated g/C Ratio	0.22	0.25	1.00	0.15	0.18	1.00	0.15	0.32	1.00	0.18	0.34	1.00
Clearance Time (s)	7.0	7.0		7.0	7.0		7.0	7.0		7.0	7.0	
Vehicle Extension (s)	3.0	3.0		3.0	3.0		3.0	5.0		3.0	5.0	
Lane Grp Cap (vph)	384	901	1583	503	652	1583	515	1120	1583	601	1208	1583
v/s Ratio Prot	c0.15	c0.11		0.06	0.04		0.07	c0.19		c0.10	0.14	
v/s Ratio Perm			c0.26			0.10			0.20			0.04
v/c Ratio	0.71	0.45	0.26	0.43	0.24	0.10	0.44	0.61	0.20	0.56	0.41	0.04
Uniform Delay, d1	40.5	35.1	0.0	43.5	39.0	0.0	43.3	32.5	0.0	42.2	28.2	0.0
Progression Factor	1.00	1.00	1.00	1.00	1.00	1.00	1.00	1.00	1.00	1.00	1.00	1.00
Incremental Delay, d2	5.8	0.4	0.4	0.6	0.2	0.1	0.6	1.5	0.3	1.1	0.5	0.1
Delay (s)	46.3	35.4	0.4	44.1	39.2	0.1	43.9	33.9	0.3	43.3	28.7	0.1
Level of Service	D	D	A	D	D	A	D	C	A	D	C	A
Approach Delay (s)		24.8			29.2			27.2			32.0	
Approach LOS		C			C			C			C	

Intersection Summary			
HCM Average Control Delay	27.9	HCM Level of Service	C
HCM Volume to Capacity ratio	0.58		
Actuated Cycle Length (s)	111.9	Sum of lost time (s)	9.0
Intersection Capacity Utilization	67.2%	ICU Level of Service	C
Analysis Period (min)	15		

c Critical Lane Group

Movement	EBL	EBR	NBL	NBT	SBT	SBR
Lane Configurations						
Ideal Flow (vphpl)	1900	1900	1900	1900	1900	1900
Total Lost time (s)	4.0			4.0	4.0	
Lane Util. Factor	0.97			0.95	0.95	
Frt	0.95			1.00	0.98	
Flt Protected	0.97			1.00	1.00	
Satd. Flow (prot)	3318			3534	3482	
Flt Permitted	0.97			0.83	1.00	
Satd. Flow (perm)	3318			2926	3482	
Volume (vph)	117	62	48	1600	1326	160
Peak-hour factor, PHF	0.95	0.95	0.95	0.95	0.95	0.95
Adj. Flow (vph)	123	65	51	1684	1396	168
RTOR Reduction (vph)	54	0	0	0	10	0
Lane Group Flow (vph)	134	0	0	1735	1554	0
Turn Type			Perm			
Protected Phases	4			2	6	
Permitted Phases			2			
Actuated Green, G (s)	11.0			61.4	61.4	
Effective Green, g (s)	14.0			64.4	64.4	
Actuated g/C Ratio	0.16			0.75	0.75	
Clearance Time (s)	7.0			7.0	7.0	
Vehicle Extension (s)	4.0			3.0	3.0	
Lane Grp Cap (vph)	538			2181	2595	
v/s Ratio Prot	c0.04				0.45	
v/s Ratio Perm				c0.59		
v/c Ratio	0.25			0.80	0.60	
Uniform Delay, d1	31.6			6.9	5.1	
Progression Factor	1.00			1.00	1.00	
Incremental Delay, d2	0.3			2.1	0.4	
Delay (s)	31.9			9.0	5.4	
Level of Service	C			A	A	
Approach Delay (s)	31.9			9.0	5.4	
Approach LOS	C			A	A	

Intersection Summary			
HCM Average Control Delay	8.6	HCM Level of Service	A
HCM Volume to Capacity ratio	0.70		
Actuated Cycle Length (s)	86.4	Sum of lost time (s)	8.0
Intersection Capacity Utilization	93.9%	ICU Level of Service	F
Analysis Period (min)	15		

c Critical Lane Group

HCM Signalized Intersection Capacity Analysis
13: Nokes Blvd & Atlantic Blvd

Kincora
Total Future 2015

Movement	EBL	EBT	EBR	WBL	WBT	WBR	NBL	NBT	NBR	SBL	SBT	SBR
Lane Configurations												
Ideal Flow (vphpl)	1900	1900	1900	1900	1900	1900	1900	1900	1900	1900	1900	1900
Total Lost time (s)	4.0	4.0	4.0	3.0	4.0	3.0	4.0	3.0	3.0	3.0	3.0	4.0
Lane Util. Factor	0.97	0.95	1.00	0.97	0.95	1.00	0.97	0.95	1.00	0.97	0.95	1.00
Frt	1.00	1.00	0.85	1.00	1.00	0.85	1.00	1.00	0.85	1.00	1.00	0.85
Flt Protected	0.95	1.00	1.00	0.95	1.00	1.00	0.95	1.00	1.00	0.95	1.00	1.00
Satd. Flow (prot)	3433	3539	1583	3433	3539	1583	3433	3539	1583	3433	3539	1583
Flt Permitted	0.95	1.00	1.00	0.95	1.00	1.00	0.95	1.00	1.00	0.95	1.00	1.00
Satd. Flow (perm)	3433	3539	1583	3433	3539	1583	3433	3539	1583	3433	3539	1583
Volume (vph)	360	318	469	121	468	49	378	86	112	36	178	145
Peak-hour factor, PHF	0.95	0.95	0.95	0.95	0.95	0.95	0.95	0.95	0.95	0.95	0.95	0.95
Adj. Flow (vph)	379	335	494	127	493	52	398	91	118	38	187	153
RTOR Reduction (vph)	0	0	0	0	0	0	0	0	80	0	0	0
Lane Group Flow (vph)	379	335	494	127	493	52	398	91	38	38	187	153
Turn Type	Prot		Free	Prot		Free	Prot		pm+ov	Prot		Free
Protected Phases	1	6		5	2		7	4	5	3	8	
Permitted Phases			Free			Free			4			Free
Actuated Green, G (s)	19.8	68.9	140.0	10.0	59.1	140.0	20.2	28.1	38.1	5.5	13.4	140.0
Effective Green, g (s)	22.8	71.9	140.0	14.0	62.1	140.0	23.2	31.6	45.6	9.5	16.9	140.0
Actuated g/C Ratio	0.16	0.51	1.00	0.10	0.44	1.00	0.17	0.23	0.33	0.07	0.12	1.00
Clearance Time (s)	7.0	7.0		7.0	7.0		7.0	6.5	7.0	7.0	6.5	
Vehicle Extension (s)	2.5	4.0		2.5	4.0		2.5	2.5	2.5	2.5	2.5	
Lane Grp Cap (vph)	559	1818	1583	343	1570	1583	569	799	550	233	427	1583
v/s Ratio Prot	c0.11	0.09		0.04	0.14		c0.12	0.03	0.01	0.01	c0.05	
v/s Ratio Perm			c0.31			0.03			0.02			0.10
v/c Ratio	0.68	0.18	0.31	0.37	0.31	0.03	0.70	0.11	0.07	0.16	0.44	0.10
Uniform Delay, d1	55.1	18.3	0.0	58.9	25.2	0.0	55.1	43.1	32.6	61.5	57.1	0.0
Progression Factor	1.00	1.00	1.00	1.00	1.00	1.00	1.00	1.00	1.00	1.00	1.00	1.00
Incremental Delay, d2	3.0	0.2	0.5	0.5	0.5	0.0	3.5	0.0	0.0	0.2	0.5	0.1
Delay (s)	58.1	18.5	0.5	59.4	25.7	0.0	58.6	43.1	32.6	61.7	57.7	0.1
Level of Service	E	B	A	E	C	A	E	D	C	E	E	A
Approach Delay (s)		23.6			30.1			51.2			34.8	
Approach LOS		C			C			D			C	

Intersection Summary

HCM Average Control Delay	32.4	HCM Level of Service	C
HCM Volume to Capacity ratio	0.46		
Actuated Cycle Length (s)	140.0	Sum of lost time (s)	11.0
Intersection Capacity Utilization	52.2%	ICU Level of Service	A
Analysis Period (min)	15		

c Critical Lane Group

HCM Signalized Intersection Capacity Analysis
14: Nokes Blvd. & Cascades Parkway

Kincora
Total Future 2015

Movement	EBL	EBT	EBR	WBL	WBT	WBR	NBL	NBT	NBR	SBL	SBT	SBR
Lane Configurations												
Ideal Flow (vphpl)	1900	1900	1900	1900	1900	1900	1900	1900	1900	1900	1900	1900
Total Lost time (s)	3.0	3.0	3.0	3.0	3.0	3.0	3.0	3.0	3.0	3.0	3.0	3.0
Lane Util. Factor	0.97	1.00	1.00	0.97	1.00	1.00	0.97	0.95	1.00	1.00	0.95	1.00
Frt	1.00	1.00	0.85	1.00	1.00	0.85	1.00	1.00	0.85	1.00	1.00	0.85
Flt Protected	0.95	1.00	1.00	0.95	1.00	1.00	0.95	1.00	1.00	0.95	1.00	1.00
Satd. Flow (prot)	3433	1863	1583	3433	1863	1583	3433	3539	1583	1770	3539	1583
Flt Permitted	0.95	1.00	1.00	0.95	1.00	1.00	0.95	1.00	1.00	0.95	1.00	1.00
Satd. Flow (perm)	3433	1863	1583	3433	1863	1583	3433	3539	1583	1770	3539	1583
Volume (vph)	72	86	79	190	404	18	161	636	220	4	693	116
Peak-hour factor, PHF	0.95	0.95	0.95	0.95	0.95	0.95	0.95	0.95	0.95	0.95	0.95	0.95
Adj. Flow (vph)	76	91	83	200	425	19	169	669	232	4	729	122
RTOR Reduction (vph)	0	0	65	0	0	12	0	0	124	0	0	76
Lane Group Flow (vph)	76	91	18	200	425	7	169	669	108	4	729	46
Turn Type	Prot		Perm	Prot		Perm	Prot		Perm	Prot		Perm
Protected Phases	7	4		3	8		1	6		5	2	
Permitted Phases			4			8			6			2
Actuated Green, G (s)	7.7	19.9	19.9	15.3	27.5	27.5	11.6	49.4	49.4	1.7	39.5	39.5
Effective Green, g (s)	11.7	24.9	24.9	19.3	32.5	32.5	15.6	53.9	53.9	5.7	44.0	44.0
Actuated g/C Ratio	0.10	0.22	0.22	0.17	0.28	0.28	0.13	0.47	0.47	0.05	0.38	0.38
Clearance Time (s)	7.0	8.0	8.0	7.0	8.0	8.0	7.0	7.5	7.5	7.0	7.5	7.5
Vehicle Extension (s)	3.0	3.0	3.0	3.0	3.0	3.0	3.0	3.0	3.0	3.0	3.0	3.0
Lane Grp Cap (vph)	347	401	340	572	523	444	462	1647	737	87	1345	601
v/s Ratio Prot	0.02	0.05		c0.06	c0.23		c0.05	0.19		0.00	c0.21	
v/s Ratio Perm			0.01			0.00			0.07			0.03
v/c Ratio	0.22	0.23	0.05	0.35	0.81	0.02	0.37	0.41	0.15	0.05	0.54	0.08
Uniform Delay, d1	47.8	37.5	36.1	42.7	38.8	30.1	45.6	20.4	17.8	52.5	28.0	22.9
Progression Factor	1.00	1.00	1.00	1.00	1.00	1.00	1.00	1.00	1.00	1.00	1.00	1.00
Incremental Delay, d2	0.3	0.3	0.1	0.4	9.4	0.0	0.5	0.2	0.1	0.2	0.4	0.1
Delay (s)	48.2	37.8	36.1	43.1	48.2	30.1	46.1	20.6	17.8	52.7	28.5	23.0
Level of Service	D	D	D	D	D	C	D	C	B	D	C	C
Approach Delay (s)		40.4			46.0			24.0			27.8	
Approach LOS		D			D			C			C	

Intersection Summary

HCM Average Control Delay	31.7	HCM Level of Service	C
HCM Volume to Capacity ratio	0.58		
Actuated Cycle Length (s)	115.8	Sum of lost time (s)	12.0
Intersection Capacity Utilization	74.1%	ICU Level of Service	D
Analysis Period (min)	15		

c Critical Lane Group

Movement	EBL	EBR	NBL	NBT	SBT	SBR
Lane Configurations						
Ideal Flow (vphpl)	1900	1900	1900	1900	1900	1900
Total Lost time (s)	3.0	3.0	3.0	3.0	3.0	3.0
Lane Util. Factor	1.00	1.00	1.00	0.95	0.95	1.00
Frt	1.00	0.85	1.00	1.00	1.00	0.85
Flt Protected	0.95	1.00	0.95	1.00	1.00	1.00
Satd. Flow (prot)	1770	1583	1770	3539	3539	1583
Flt Permitted	0.95	1.00	0.23	1.00	1.00	1.00
Satd. Flow (perm)	1770	1583	427	3539	3539	1583
Volume (vph)	97	54	172	1026	782	142
Peak-hour factor, PHF	0.95	0.95	0.95	0.95	0.95	0.95
Adj. Flow (vph)	102	57	181	1080	823	149
RTOR Reduction (vph)	0	46	0	0	0	52
Lane Group Flow (vph)	102	11	181	1080	823	97
Turn Type		Perm	pm+pt			pm+ov
Protected Phases	4		1	6	2	4
Permitted Phases		4	6			2
Actuated Green, G (s)	7.8	7.8	42.3	42.3	26.2	34.0
Effective Green, g (s)	11.8	11.8	45.8	45.8	29.7	41.5
Actuated g/C Ratio	0.19	0.19	0.72	0.72	0.47	0.65
Clearance Time (s)	7.0	7.0	7.0	6.5	6.5	7.0
Vehicle Extension (s)	3.0	3.0	4.0	4.0	4.0	3.0
Lane Grp Cap (vph)	328	294	584	2549	1653	1108
v/s Ratio Prot	c0.06		0.06	c0.31	c0.23	0.02
v/s Ratio Perm		0.01	0.16			0.05
v/c Ratio	0.31	0.04	0.31	0.42	0.50	0.09
Uniform Delay, d1	22.4	21.2	4.0	3.6	11.8	4.1
Progression Factor	1.00	1.00	1.00	1.00	1.00	1.00
Incremental Delay, d2	0.5	0.1	0.4	0.2	0.3	0.0
Delay (s)	22.9	21.3	4.5	3.7	12.1	4.1
Level of Service	C	C	A	A	B	A
Approach Delay (s)	22.3			3.8	10.9	
Approach LOS	C			A	B	

Intersection Summary			
HCM Average Control Delay	7.9	HCM Level of Service	A
HCM Volume to Capacity ratio	0.44		
Actuated Cycle Length (s)	63.6	Sum of lost time (s)	9.0
Intersection Capacity Utilization	46.5%	ICU Level of Service	A
Analysis Period (min)	15		
c Critical Lane Group			

Movement	EBL	EBT	EBR	WBL	WBT	WBR	NBL	NBT	NBR	SBL	SBT	SBR
Lane Configurations												
Ideal Flow (vphpl)	1900	1900	1900	1900	1900	1900	1900	1900	1900	1900	1900	1900
Lane Width	12	12	12	12	12	13	12	12	12	12	12	12
Total Lost time (s)	3.0	3.0	3.0	3.0	3.0	3.0	3.0	3.0	3.0	3.0	3.0	3.0
Lane Util. Factor	0.97	0.91	1.00	0.97	0.86	1.00	0.97	0.95	1.00	0.97	0.95	1.00
Frt	1.00	1.00	0.85	1.00	1.00	0.85	1.00	1.00	0.85	1.00	1.00	0.85
Flt Protected	0.95	1.00	1.00	0.95	1.00	1.00	0.95	1.00	1.00	0.95	1.00	1.00
Satd. Flow (prot)	3433	5085	1583	3433	6408	1636	3433	3539	1583	3433	3539	1583
Flt Permitted	0.95	1.00	1.00	0.95	1.00	1.00	0.95	1.00	1.00	0.95	1.00	1.00
Satd. Flow (perm)	3433	5085	1583	3433	6408	1636	3433	3539	1583	3433	3539	1583
Volume (vph)	226	1577	252	103	536	583	62	227	110	962	535	427
Peak-hour factor, PHF	0.95	0.95	0.95	0.95	0.95	0.95	0.95	0.95	0.95	0.95	0.95	0.95
Adj. Flow (vph)	238	1660	265	108	564	614	65	239	116	1013	563	449
RTOR Reduction (vph)	0	0	0	0	0	0	0	0	4	0	0	50
Lane Group Flow (vph)	238	1660	265	108	564	614	65	239	112	1013	563	399
Turn Type	Prot		Free	Prot		Free	Prot		pm+ov	Prot		pm+ov
Protected Phases	1	6		5	2		3	8	5	7	4	1
Permitted Phases			Free			Free			8			4
Actuated Green, G (s)	13.8	45.6	130.0	8.7	40.5	130.0	4.0	14.2	22.9	34.0	44.2	58.0
Effective Green, g (s)	17.8	49.6	130.0	12.7	44.5	130.0	8.0	17.7	30.4	38.0	47.7	65.5
Actuated g/C Ratio	0.14	0.38	1.00	0.10	0.34	1.00	0.06	0.14	0.23	0.29	0.37	0.50
Clearance Time (s)	7.0	7.0		7.0	7.0		7.0	6.5	7.0	7.0	6.5	7.0
Vehicle Extension (s)	2.0	3.0		2.0	3.0		2.0	2.0	2.0	2.0	2.0	2.0
Lane Grp Cap (vph)	470	1940	1583	335	2194	1636	211	482	407	1003	1299	834
v/s Ratio Prot	c0.07	c0.33		0.03	0.09		0.02	0.07	0.03	c0.30	0.16	c0.07
v/s Ratio Perm			0.17			0.38			0.04			0.19
v/c Ratio	0.51	0.86	0.17	0.32	0.26	0.38	0.31	0.50	0.28	1.01	0.43	0.48
Uniform Delay, d1	52.0	36.9	0.0	54.6	30.8	0.0	58.4	52.0	40.8	46.0	31.0	21.1
Progression Factor	1.00	1.00	1.00	0.82	0.77	1.00	1.00	1.00	1.00	1.00	1.00	1.00
Incremental Delay, d2	0.3	5.1	0.2	0.2	0.3	0.6	0.3	0.3	0.1	30.9	0.1	0.2
Delay (s)	52.3	42.0	0.2	44.8	24.0	0.6	58.7	52.3	40.9	76.9	31.1	21.2
Level of Service	D	D	A	D	C	A	E	D	D	E	C	C
Approach Delay (s)		38.0			14.6			50.1			51.8	
Approach LOS		D			B			D			D	

Intersection Summary			
HCM Average Control Delay	38.5	HCM Level of Service	D
HCM Volume to Capacity ratio	0.77		
Actuated Cycle Length (s)	130.0	Sum of lost time (s)	3.0
Intersection Capacity Utilization	81.7%	ICU Level of Service	D
Analysis Period (min)	15		
c Critical Lane Group			

Movement	EBL	EBT	EBR	WBL	WBT	WBR	NBL	NBT	NBR	SBL	SBT	SBR
Lane Configurations												
Ideal Flow (vphpl)	1900	1900	1900	1900	1900	1900	1900	1900	1900	1900	1900	1900
Total Lost time (s)	3.0	3.0	3.0	3.0	3.0	3.0	3.0	3.0	3.0	3.0	3.0	3.0
Lane Util. Factor	1.00	0.86	1.00	1.00	0.86	1.00	1.00	0.95	1.00	1.00	0.95	1.00
Frt	1.00	1.00	0.85	1.00	1.00	0.85	1.00	1.00	0.85	1.00	1.00	0.85
Flt Protected	0.95	1.00	1.00	0.95	1.00	1.00	0.95	1.00	1.00	0.95	1.00	1.00
Satd. Flow (prot)	1770	6408	1583	1770	6408	1583	1770	3539	1583	1770	3539	1583
Flt Permitted	0.95	1.00	1.00	0.95	1.00	1.00	0.75	1.00	1.00	0.54	1.00	1.00
Satd. Flow (perm)	1770	6408	1583	1770	6408	1583	1392	3539	1583	997	3539	1583
Volume (vph)	125	2519	55	269	1063	202	72	63	170	104	14	28
Peak-hour factor, PHF	0.95	0.95	0.95	0.95	0.95	0.95	0.95	0.95	0.95	0.95	0.95	0.95
Adj. Flow (vph)	132	2652	58	277	1119	213	76	66	179	109	15	29
RTOR Reduction (vph)	0	0	25	0	0	62	0	0	0	0	0	25
Lane Group Flow (vph)	132	2652	33	277	1119	151	76	66	179	109	15	4
Turn Type	Prot		pm+ov	Prot		pm+ov	pm+pt		Free	pm+pt		Perm
Protected Phases	1	6	3	5	2	7	3	8		7	4	
Permitted Phases			6			2	8		Free	4		4
Actuated Green, G (s)	12.5	65.1	69.5	23.4	75.5	86.9	10.0	5.6	130.0	22.0	12.6	12.6
Effective Green, g (s)	16.5	69.6	75.0	26.9	79.0	92.4	15.5	9.1	130.0	25.5	16.1	16.1
Actuated g/C Ratio	0.13	0.53	0.58	0.21	0.61	0.71	0.12	0.07	1.00	0.20	0.12	0.12
Clearance Time (s)	7.0	6.5	5.0	6.5	6.5	5.0	5.0	6.5		5.0	6.5	6.5
Vehicle Extension (s)	2.0	3.0	2.0	2.0	3.0	2.0	2.0	2.0		2.0	2.0	2.0
Lane Grp Cap (vph)	225	3381	950	366	3894	1162	185	248	1583	275	438	196
v/s Ratio Prot	0.07	c0.41	0.00	c0.16	0.17	0.01	0.02	0.02		c0.04	0.00	
v/s Ratio Perm			0.02			0.08	0.03		0.11	c0.04		0.00
v/c Ratio	0.59	0.78	0.04	0.76	0.29	0.13	0.41	0.27	0.11	0.40	0.03	0.02
Uniform Delay, d1	53.5	24.7	11.9	48.5	12.1	6.0	52.7	57.3	0.0	44.8	50.1	50.0
Progression Factor	1.13	0.75	0.24	1.00	1.00	1.00	1.00	1.00	1.00	1.00	1.00	1.00
Incremental Delay, d2	1.2	0.9	0.0	7.7	0.2	0.0	0.5	0.2	0.1	0.3	0.1	0.2
Delay (s)	61.7	19.4	2.9	56.2	12.3	6.0	53.2	57.5	0.1	45.1	50.3	50.2
Level of Service	E	B	A	E	B	A	D	E	A	D	D	D
Approach Delay (s)		21.0			19.0			24.5			46.6	
Approach LOS		C			B			C			D	

Intersection Summary			
HCM Average Control Delay	21.4	HCM Level of Service	C
HCM Volume to Capacity ratio	0.70		
Actuated Cycle Length (s)	130.0	Sum of lost time (s)	9.0
Intersection Capacity Utilization	73.5%	ICU Level of Service	D
Analysis Period (min)	15		
c Critical Lane Group			

Movement	EBL	EBT	EBR	WBL	WBT	WBR	NBL	NBT	NBR	SBL	SBT	SBR
Lane Configurations												
Ideal Flow (vphpl)	1900	1900	1900	1900	1900	1900	1900	1900	1900	1900	1900	1900
Total Lost time (s)	3.0	3.0	3.0	3.0	3.0	3.0	3.0	3.0	3.0	3.0	3.0	3.0
Lane Util. Factor	0.94	0.86	1.00	0.97	0.86	1.00	0.94	0.95	1.00	0.94	0.95	1.00
Frt	1.00	1.00	0.85	1.00	1.00	0.85	1.00	1.00	0.85	1.00	1.00	0.85
Flt Protected	0.95	1.00	1.00	0.95	1.00	1.00	0.95	1.00	1.00	0.95	1.00	1.00
Satd. Flow (prot)	4990	6408	1583	3433	6408	1583	4990	3539	1583	4990	3539	1583
Flt Permitted	0.95	1.00	1.00	0.95	1.00	1.00	0.95	1.00	1.00	0.95	1.00	1.00
Satd. Flow (perm)	4990	6408	1583	3433	6408	1583	4990	3539	1583	4990	3539	1583
Volume (vph)	925	3385	227	436	2447	314	210	95	91	167	88	378
Peak-hour factor, PHF	0.95	0.95	0.95	0.95	0.95	0.95	0.95	0.95	0.95	0.95	0.95	0.95
Adj. Flow (vph)	974	3563	239	459	2576	331	221	100	96	176	93	398
RTOR Reduction (vph)	0	0	87	0	0	0	0	0	0	0	0	0
Lane Group Flow (vph)	974	3563	152	459	2576	331	221	100	96	176	93	398
Turn Type	Prot		Perm	Prot		Free	Prot		Free	Prot		Free
Protected Phases	1	6		5	2		7	4		3	8	
Permitted Phases			6			Free			Free			Free
Actuated Green, G (s)	33.3	94.1	94.1	22.9	83.7	160.0	9.9	9.0	160.0	6.0	5.1	160.0
Effective Green, g (s)	37.3	98.1	98.1	26.9	87.7	160.0	13.9	13.0	160.0	10.0	9.1	160.0
Actuated g/C Ratio	0.23	0.61	0.61	0.17	0.55	1.00	0.09	0.08	1.00	0.06	0.06	1.00
Clearance Time (s)	7.0	7.0	7.0	7.0	7.0		7.0	7.0		7.0	7.0	
Vehicle Extension (s)	2.0	3.0	3.0	2.0	3.0		3.0	3.0		3.0	3.0	
Lane Grp Cap (vph)	1163	3929	971	577	3512	1583	434	288	1583	312	201	1583
v/s Ratio Prot	c0.20	c0.56		0.13	0.40		c0.04	0.03		c0.04	c0.03	
v/s Ratio Perm			0.10			0.21			0.06			0.25
v/c Ratio	0.84	0.91	0.16	0.80	0.73	0.21	0.51	0.35	0.06	0.56	0.46	0.25
Uniform Delay, d1	58.5	27.0	13.2	63.9	27.3	0.0	69.8	69.5	0.0	72.9	73.1	0.0
Progression Factor	1.00	1.00	1.00	1.00	1.00	1.00	1.00	1.00	1.00	1.00	1.00	1.00
Incremental Delay, d2	5.2	4.1	0.3	7.0	1.4	0.3	0.9	0.7	0.1	2.3	1.7	0.4
Delay (s)	63.6	31.0	13.6	70.9	28.7	0.3	70.7	70.2	0.1	75.2	74.8	0.4
Level of Service	E	C	B	E	C	A	E	E	A	E	E	A
Approach Delay (s)		36.8			31.7			54.3			30.5	
Approach LOS		D			C			D			C	

Intersection Summary			
HCM Average Control Delay	35.3	HCM Level of Service	D
HCM Volume to Capacity ratio	0.83		
Actuated Cycle Length (s)	160.0	Sum of lost time (s)	9.0
Intersection Capacity Utilization	82.2%	ICU Level of Service	E
Analysis Period (min)	15		
c Critical Lane Group			

Movement	EBL	EBT	EBR	WBL	WBT	WBR	NBL	NBT	NBR	SBL	SBT	SBR
Lane Configurations												
Ideal Flow (vphpl)	1900	1900	1900	1900	1900	1900	1900	1900	1900	1900	1900	1900
Total Lost time (s)		3.0		3.0	3.0			3.0	3.0		3.0	
Lane Util. Factor		0.95		1.00	0.95			1.00	1.00		1.00	
Frt		0.98		1.00	1.00			1.00	0.85		0.91	
Flt Protected		1.00		0.95	1.00			0.95	1.00		0.99	
Satd. Flow (prot)		3454		1770	3536			1776	1583		1676	
Flt Permitted		0.91		0.13	1.00			0.72	1.00		0.95	
Satd. Flow (perm)		3137		233	3536			1332	1583		1599	
Volume (vph)	24	1009	188	218	1238	7	118	3	144	4	3	14
Peak-hour factor, PHF	0.95	0.95	0.95	0.95	0.95	0.95	0.95	0.95	0.95	0.95	0.95	0.95
Adj. Flow (vph)	25	1062	198	229	1303	7	124	3	152	4	3	15
RTOR Reduction (vph)	0	12	0	0	0	0	0	0	0	0	12	0
Lane Group Flow (vph)	0	1273	0	229	1310	0	0	127	152	0	10	0
Turn Type	Perm			pm+pt			Perm		pm+ov	Perm		
Protected Phases		6		5	2			4	5		8	
Permitted Phases	6			2			4		4	8		
Actuated Green, G (s)		43.1		57.7	57.7			10.6	19.7		10.6	
Effective Green, g (s)		46.1		60.7	60.7			13.6	25.2		13.6	
Actuated g/C Ratio		0.57		0.76	0.76			0.17	0.31		0.17	
Clearance Time (s)		6.0		5.5	6.0			6.0	5.5		6.0	
Vehicle Extension (s)		4.0		2.0	4.0			3.0	2.0		3.0	
Lane Grp Cap (vph)		1801		398	2673			226	556		271	
v/s Ratio Prot				c0.08	0.37				0.04			
v/s Ratio Perm		c0.41		0.35				c0.10	0.06		0.01	
v/c Ratio		0.71		0.58	0.49			0.56	0.27		0.04	
Uniform Delay, d1		12.3		8.9	3.8			30.6	20.7		27.9	
Progression Factor		1.00		1.00	1.00			1.00	1.00		1.00	
Incremental Delay, d2		1.4		1.3	0.2			3.2	0.1		0.1	
Delay (s)		13.6		10.1	4.0			33.8	20.8		27.9	
Level of Service		B		B	A			C	C		C	
Approach Delay (s)		13.6			4.9			26.7			27.9	
Approach LOS		B			A			C			C	

Intersection Summary			
HCM Average Control Delay	10.6	HCM Level of Service	B
HCM Volume to Capacity ratio	0.66		
Actuated Cycle Length (s)	80.3	Sum of lost time (s)	9.0
Intersection Capacity Utilization	92.4%	ICU Level of Service	F
Analysis Period (min)	15		

c Critical Lane Group

Movement	EBL	EBT	WBT	WBR	SBL	SBR
Lane Configurations						
Ideal Flow (vphpl)	1900	1900	1900	1900	1900	1900
Total Lost time (s)	3.0	3.0	3.0	3.0	3.0	3.0
Lane Util. Factor	0.97	0.95	0.91	0.91	0.97	1.00
Frt	1.00	1.00	1.00	0.85	1.00	0.85
Flt Protected	0.95	1.00	1.00	1.00	0.95	1.00
Satd. Flow (prot)	3433	3539	3390	1441	3433	1583
Flt Permitted	0.95	1.00	1.00	1.00	0.95	1.00
Satd. Flow (perm)	3433	3539	3390	1441	3433	1583
Volume (vph)	686	458	511	376	298	560
Peak-hour factor, PHF	0.95	0.95	0.95	0.95	0.95	0.95
Adj. Flow (vph)	722	482	538	396	314	589
RTOR Reduction (vph)	0	0	0	21	0	431
Lane Group Flow (vph)	722	482	538	375	314	158
Turn Type	Prot			pm+ov		Perm
Protected Phases	5	2	6	4	4	
Permitted Phases				6		4
Actuated Green, G (s)	19.2	44.4	18.2	33.6	15.4	15.4
Effective Green, g (s)	23.2	48.4	22.2	42.1	19.9	19.9
Actuated g/C Ratio	0.31	0.65	0.30	0.57	0.27	0.27
Clearance Time (s)	7.0	7.0	7.0	7.5	7.5	7.5
Vehicle Extension (s)	2.0	3.0	3.0	3.0	3.0	3.0
Lane Grp Cap (vph)	1072	2305	1013	875	919	424
v/s Ratio Prot	c0.21	0.14	c0.16	c0.11	0.09	
v/s Ratio Perm				0.15		0.10
v/c Ratio	0.67	0.21	0.53	0.43	0.34	0.37
Uniform Delay, d1	22.3	5.2	21.7	9.2	21.9	22.1
Progression Factor	1.00	1.00	1.00	1.00	1.00	1.00
Incremental Delay, d2	1.3	0.0	0.5	0.3	0.2	0.6
Delay (s)	23.6	5.3	22.2	9.6	22.1	22.7
Level of Service	C	A	C	A	C	C
Approach Delay (s)		16.2	16.9		22.5	
Approach LOS		B	B		C	

Intersection Summary			
HCM Average Control Delay	18.3	HCM Level of Service	B
HCM Volume to Capacity ratio	0.54		
Actuated Cycle Length (s)	74.3	Sum of lost time (s)	6.0
Intersection Capacity Utilization	59.5%	ICU Level of Service	B
Analysis Period (min)	15		

c Critical Lane Group

HCM Signalized Intersection Capacity Analysis
24: Pacific Boulevard & Loudoun County Parkway

Kincora
Total Future 2015

Movement	EBL	EBT	EBR	WBL	WBT	WBR	NBL	NBT	NBR	SBL	SBT	SBR
Lane Configurations												
Ideal Flow (vphpl)	1900	1900	1900	1900	1900	1900	1900	1900	1900	1900	1900	1900
Total Lost time (s)	4.0		4.0	4.0		4.0	4.0	4.0	4.0	4.0	4.0	4.0
Lane Util. Factor	0.97		1.00	1.00		1.00	1.00	0.95	1.00	1.00	0.95	1.00
Frt	1.00		0.85	1.00		0.85	1.00	1.00	0.85	1.00	1.00	0.85
Flt Protected	0.95		1.00	0.95		1.00	0.95	1.00	1.00	0.95	1.00	1.00
Satd. Flow (prot)	3433		1583	1770		1583	1770	3539	1583	1770	3539	1583
Flt Permitted	0.95		1.00	0.95		1.00	0.23	1.00	1.00	0.06	1.00	1.00
Satd. Flow (perm)	3433		1583	1770		1583	437	3539	1583	113	3539	1583
Volume (vph)	196	0	167	9	0	190	312	1378	63	641	1141	263
Peak-hour factor, PHF	0.95	0.95	0.95	0.95	0.95	0.95	0.95	0.95	0.95	0.95	0.95	0.95
Adj. Flow (vph)	206	0	176	9	0	200	328	1451	66	675	1201	277
RTOR Reduction (vph)	0	0	0	0	0	0	0	0	26	0	0	72
Lane Group Flow (vph)	206	0	176	9	0	200	328	1451	40	675	1201	205
Turn Type	Prot		Free	Prot		Free	pm+pt		pm+ov	pm+pt		pm+ov
Protected Phases	7	4		3	8		5	2	3	1	6	7
Permitted Phases			Free			Free	2		2	6		6
Actuated Green, G (s)	15.4		140.5	6.4		140.5	80.4	59.1	65.5	113.1	84.8	100.2
Effective Green, g (s)	16.4		140.5	7.4		140.5	86.4	62.1	69.5	116.1	87.8	104.2
Actuated g/C Ratio	0.12		1.00	0.05		1.00	0.61	0.44	0.49	0.83	0.62	0.74
Clearance Time (s)	5.0			5.0			7.0	7.0	5.0	7.0	7.0	5.0
Vehicle Extension (s)	2.0			2.0			2.0	3.0	2.0	2.0	3.0	2.0
Lane Grp Cap (vph)	401		1583	93		1583	499	1564	828	683	2212	1219
v/s Ratio Prot	c0.06			0.01			0.11	0.41	0.00	c0.35	0.34	0.02
v/s Ratio Perm			0.11			0.13	0.29		0.02	c0.47		0.11
v/c Ratio	0.51		0.11	0.10		0.13	0.66	0.93	0.05	0.99	0.54	0.17
Uniform Delay, d1	58.3		0.0	63.4		0.0	23.5	37.1	18.4	40.8	15.0	5.4
Progression Factor	1.00		1.00	1.00		1.00	1.00	1.00	1.00	1.00	1.00	1.00
Incremental Delay, d2	0.5		0.1	0.2		0.2	2.4	9.9	0.0	31.1	0.3	0.0
Delay (s)	58.8		0.1	63.5		0.2	25.9	47.0	18.4	71.8	15.2	5.4
Level of Service	E		A	E		A	C	D	B	E	B	A
Approach Delay (s)		31.8			2.9			42.2			31.7	
Approach LOS		C			A			D			C	

Intersection Summary				
HCM Average Control Delay	34.6	HCM Level of Service	C	
HCM Volume to Capacity ratio	0.92			
Actuated Cycle Length (s)	140.5	Sum of lost time (s)	8.0	
Intersection Capacity Utilization	95.9%	ICU Level of Service	F	
Analysis Period (min)	15			
c Critical Lane Group				

HCM Unsignalized Intersection Capacity Analysis
25: Pacific Boulevard & Richfield Way

Kincora
Total Future 2015

Movement	EBL	EBT	EBR	WBL	WBT	WBR	NBL	NBT	NBR	SBL	SBT	SBR
Lane Configurations												
Sign Control		Free			Free			Stop			Stop	
Grade		0%			0%			0%			0%	
Volume (veh/h)	0	450	5	0	165	0	5	0	0	0	0	0
Peak Hour Factor	0.92	0.92	0.92	0.92	0.92	0.92	0.92	0.92	0.92	0.92	0.92	0.92
Hourly flow rate (vph)	0	489	5	0	179	0	5	0	0	0	0	0
Pedestrians												
Lane Width (ft)												
Walking Speed (ft/s)												
Percent Blockage												
Right turn flare (veh)												
Median type								None			None	
Median storage veh)												
Upstream signal (ft)												
pX, platoon unblocked												
vC, conflicting volume	179			495			579	668	245	424	674	90
vC1, stage 1 conf vol												
vC2, stage 2 conf vol												
vCu, unblocked vol	179			495			579	668	245	424	674	90
tC, single (s)	4.1			4.1			7.5	6.5	6.9	7.5	6.5	6.9
tC, 2 stage (s)												
tF (s)	2.2			2.2			3.5	4.0	3.3	3.5	4.0	3.3
p0 queue free %	100			100			99	100	100	100	100	100
cM capacity (veh/h)	1394			1065			398	377	756	514	375	950

Direction, Lane #	EB 1	EB 2	EB 3	EB 4	WB 1	WB 2	WB 3	WB 4	NB 1	NB 2	SB 1	SB 2
Volume Total	0	245	245	5	0	90	90	0	5	0	0	0
Volume Left	0	0	0	0	0	0	0	0	5	0	0	0
Volume Right	0	0	0	5	0	0	0	0	0	0	0	0
cSH	1700	1700	1700	1700	1700	1700	1700	1700	398	1700	1700	1700
Volume to Capacity	0.00	0.14	0.14	0.00	0.00	0.05	0.05	0.00	0.01	0.00	0.00	0.00
Queue Length 95th (ft)	0	0	0	0	0	0	0	0	1	0	0	0
Control Delay (s)	0.0	0.0	0.0	0.0	0.0	0.0	0.0	0.0	14.2	0.0	0.0	0.0
Lane LOS									B	A	A	A
Approach Delay (s)	0.0				0.0				14.2		0.0	
Approach LOS									B		A	

Intersection Summary				
Average Delay	0.1			
Intersection Capacity Utilization	22.4%	ICU Level of Service	A	
Analysis Period (min)	15			

Movement	WBL	WBR	NBT	NBR	SBL	SBT
Lane Configurations						
Ideal Flow (vphpl)	1900	1900	1900	1900	1900	1900
Total Lost time (s)	4.0	4.0	4.0	4.0	4.0	4.0
Lane Util. Factor	0.97	1.00	0.95	1.00	1.00	0.95
Frt	1.00	0.85	1.00	0.85	1.00	1.00
Flt Protected	0.95	1.00	1.00	1.00	0.95	1.00
Satd. Flow (prot)	3433	1583	3539	1583	1770	3539
Flt Permitted	0.95	1.00	1.00	1.00	0.95	1.00
Satd. Flow (perm)	3433	1583	3539	1583	1770	3539
Volume (vph)	386	598	659	57	252	337
Peak-hour factor, PHF	0.95	0.95	0.95	0.95	0.95	0.95
Adj. Flow (vph)	406	629	694	60	265	355
RTOR Reduction (vph)	0	389	0	42	0	0
Lane Group Flow (vph)	406	240	694	18	265	355
Turn Type		Perm		Perm	Prot	
Protected Phases	8		2		1	6
Permitted Phases		8		2		
Actuated Green, G (s)	17.0	17.0	19.7	19.7	16.2	42.9
Effective Green, g (s)	20.0	20.0	22.7	22.7	19.2	45.9
Actuated g/C Ratio	0.27	0.27	0.31	0.31	0.26	0.62
Clearance Time (s)	7.0	7.0	7.0	7.0	7.0	7.0
Vehicle Extension (s)	2.0	2.0	2.0	2.0	2.0	2.0
Lane Grp Cap (vph)	929	428	1087	486	460	2198
v/s Ratio Prot	0.12		c0.20		c0.15	0.10
v/s Ratio Perm		c0.15		0.01		
v/c Ratio	0.44	0.56	0.64	0.04	0.58	0.16
Uniform Delay, d1	22.3	23.2	22.1	17.9	23.8	5.9
Progression Factor	1.00	1.00	1.00	1.00	1.00	1.00
Incremental Delay, d2	0.1	1.0	0.9	0.0	1.1	0.0
Delay (s)	22.4	24.2	23.0	18.0	24.9	5.9
Level of Service	C	C	C	B	C	A
Approach Delay (s)	23.5		22.6			14.0
Approach LOS	C		C			B

Intersection Summary			
HCM Average Control Delay	20.8	HCM Level of Service	C
HCM Volume to Capacity ratio	0.59		
Actuated Cycle Length (s)	73.9	Sum of lost time (s)	12.0
Intersection Capacity Utilization	61.9%	ICU Level of Service	B
Analysis Period (min)	15		

c Critical Lane Group

Movement	WBL	WBR	NBT	NBR	SBL	SBT
Lane Configurations						
Sign Control	Stop		Free			Free
Grade	0%		0%			0%
Volume (veh/h)	0	37	679	178	0	723
Peak Hour Factor	0.95	0.95	0.95	0.95	0.95	0.95
Hourly flow rate (vph)	0	39	715	187	0	761
Pedestrians						
Lane Width (ft)						
Walking Speed (ft/s)						
Percent Blockage						
Right turn flare (veh)						
Median type	None					
Median storage veh)						
Upstream signal (ft)			535			850
pX, platoon unblocked	0.92	0.92			0.92	
vC, conflicting volume	1189	451			902	
vC1, stage 1 conf vol						
vC2, stage 2 conf vol						
vCu, unblocked vol	1121	321			810	
tC, single (s)	6.8	6.9			4.1	
tC, 2 stage (s)						
tF (s)	3.5	3.3			2.2	
p0 queue free %	100	94			100	
cM capacity (veh/h)	185	622			749	

Direction, Lane #	WB 1	NB 1	NB 2	SB 1	SB 2
Volume Total	39	476	426	381	381
Volume Left	0	0	0	0	0
Volume Right	39	0	187	0	0
cSH	622	1700	1700	1700	1700
Volume to Capacity	0.06	0.28	0.25	0.22	0.22
Queue Length 95th (ft)	5	0	0	0	0
Control Delay (s)	11.2	0.0	0.0	0.0	0.0
Lane LOS	B				
Approach Delay (s)	11.2	0.0		0.0	
Approach LOS	B				

Intersection Summary			
Average Delay	0.3		
Intersection Capacity Utilization	34.5%	ICU Level of Service	A
Analysis Period (min)	15		

Movement	WBL	WBR	NBT	NBR	SBL	SBT
Lane Configurations						
Ideal Flow (vphpl)	1900	1900	1900	1900	1900	1900
Total Lost time (s)	4.0		4.0			4.0
Lane Util. Factor	1.00		0.95			0.95
Frt	0.95		1.00			1.00
Flt Protected	0.97		1.00			1.00
Satd. Flow (prot)	1711		3529			3533
Flt Permitted	0.97		1.00			0.91
Satd. Flow (perm)	1711		3529			3214
Volume (vph)	33	22	835	17	25	698
Peak-hour factor, PHF	0.95	0.95	0.95	0.95	0.95	0.95
Adj. Flow (vph)	35	23	879	18	26	735
RTOR Reduction (vph)	18	0	2	0	0	0
Lane Group Flow (vph)	40	0	895	0	0	761
Turn Type					Perm	
Protected Phases	8		2			6
Permitted Phases					6	
Actuated Green, G (s)	10.3		49.0			49.0
Effective Green, g (s)	13.3		52.0			52.0
Actuated g/C Ratio	0.18		0.71			0.71
Clearance Time (s)	7.0		7.0			7.0
Vehicle Extension (s)	2.0		2.0			2.0
Lane Grp Cap (vph)	310		2504			2280
v/s Ratio Prot	c0.02		c0.25			
v/s Ratio Perm						0.24
v/c Ratio	0.13		0.36			0.33
Uniform Delay, d1	25.1		4.1			4.1
Progression Factor	1.00		1.00			1.00
Incremental Delay, d2	0.1		0.0			0.0
Delay (s)	25.2		4.2			4.1
Level of Service	C		A			A
Approach Delay (s)	25.2		4.2			4.1
Approach LOS	C		A			A

Intersection Summary			
HCM Average Control Delay	4.8	HCM Level of Service	A
HCM Volume to Capacity ratio	0.31		
Actuated Cycle Length (s)	73.3	Sum of lost time (s)	8.0
Intersection Capacity Utilization	52.5%	ICU Level of Service	A
Analysis Period (min)	15		

c Critical Lane Group

Movement	WBL	WBR	NBT	NBR	SBL	SBT
Lane Configurations						
Sign Control	Stop		Free			Free
Grade	0%		0%			0%
Volume (veh/h)	0	4	1236	21	0	588
Peak Hour Factor	0.95	0.95	0.95	0.95	0.95	0.95
Hourly flow rate (vph)	0	4	1301	22	0	619
Pedestrians						
Lane Width (ft)						
Walking Speed (ft/s)						
Percent Blockage						
Right turn flare (veh)						
Median type	None					
Median storage veh)						
Upstream signal (ft)			844			
pX, platoon unblocked	0.86	0.86			0.86	
vC, conflicting volume	1622	662			1323	
vC1, stage 1 conf vol						
vC2, stage 2 conf vol						
vCu, unblocked vol	1559	439			1210	
tC, single (s)	6.8	6.9			4.1	
tC, 2 stage (s)						
tF (s)	3.5	3.3			2.2	
p0 queue free %	100	99			100	
cM capacity (veh/h)	88	485			490	

Direction, Lane #	WB 1	NB 1	NB 2	SB 1	SB 2
Volume Total	4	867	456	309	309
Volume Left	0	0	0	0	0
Volume Right	4	0	22	0	0
cSH	485	1700	1700	1700	1700
Volume to Capacity	0.01	0.51	0.27	0.18	0.18
Queue Length 95th (ft)	1	0	0	0	0
Control Delay (s)	12.5	0.0	0.0	0.0	0.0
Lane LOS	B				
Approach Delay (s)	12.5	0.0		0.0	
Approach LOS	B				

Intersection Summary			
Average Delay	0.0		
Intersection Capacity Utilization	44.8%	ICU Level of Service	A
Analysis Period (min)	15		

Movement	WBL	WBR	NBT	NBR	SBL	SBT
Lane Configurations			↑↑			↑↑
Sign Control	Stop		Free			Free
Grade	0%		0%			0%
Volume (veh/h)	0	4	1218	21	0	588
Peak Hour Factor	0.95	0.95	0.95	0.95	0.95	0.95
Hourly flow rate (vph)	0	4	1282	22	0	619
Pedestrians						
Lane Width (ft)						
Walking Speed (ft/s)						
Percent Blockage						
Right turn flare (veh)						
Median type	None					
Median storage veh)						
Upstream signal (ft)						
pX, platoon unblocked						
vC, conflicting volume	1603	652			1304	
vC1, stage 1 conf vol						
vC2, stage 2 conf vol						
vCu, unblocked vol	1603	652			1304	
tC, single (s)	6.8	6.9			4.1	
tC, 2 stage (s)						
tF (s)	3.5	3.3			2.2	
p0 queue free %	100	99			100	
cM capacity (veh/h)	96	410			527	

Direction, Lane #	WB 1	NB 1	NB 2	SB 1	SB 2
Volume Total	4	855	449	309	309
Volume Left	0	0	0	0	0
Volume Right	4	0	22	0	0
cSH	410	1700	1700	1700	1700
Volume to Capacity	0.01	0.50	0.26	0.18	0.18
Queue Length 95th (ft)	1	0	0	0	0
Control Delay (s)	13.9	0.0	0.0	0.0	0.0
Lane LOS	B				
Approach Delay (s)	13.9	0.0		0.0	
Approach LOS	B				

Intersection Summary			
Average Delay	0.0		
Intersection Capacity Utilization	44.3%	ICU Level of Service	A
Analysis Period (min)	15		

Movement	EBL	EBT	EBR	WBL	WBT	WBR	NBL	NBT	NBR	SBL	SBT	SBR
Lane Configurations			↱			↱		↑↑			↑↑	
Sign Control		Stop			Stop			Free			Free	
Grade		0%			0%			0%			0%	
Volume (veh/h)	0	0	48	0	0	4	0	1214	8	0	540	149
Peak Hour Factor	0.95	0.95	0.95	0.95	0.95	0.95	0.95	0.95	0.95	0.95	0.95	0.95
Hourly flow rate (vph)	0	0	51	0	0	4	0	1278	8	0	568	157
Pedestrians												
Lane Width (ft)												
Walking Speed (ft/s)												
Percent Blockage												
Right turn flare (veh)												
Median type		None			None							
Median storage veh)												
Upstream signal (ft)												
pX, platoon unblocked												
vC, conflicting volume	1290	1933	363	1617	2007	643	725			1286		
vC1, stage 1 conf vol												
vC2, stage 2 conf vol												
vCu, unblocked vol	1290	1933	363	1617	2007	643	725			1286		
tC, single (s)	7.5	6.5	6.9	7.5	6.5	6.9	4.1			4.1		
tC, 2 stage (s)												
tF (s)	3.5	4.0	3.3	3.5	4.0	3.3	2.2			2.2		
p0 queue free %	100	100	92	100	100	99	100			100		
cM capacity (veh/h)	120	65	634	63	59	416	873			535		

Direction, Lane #	EB 1	WB 1	NB 1	NB 2	SB 1	SB 2
Volume Total	51	4	852	434	379	346
Volume Left	0	0	0	0	0	0
Volume Right	51	4	0	8	0	157
cSH	634	416	1700	1700	1700	1700
Volume to Capacity	0.08	0.01	0.50	0.26	0.22	0.20
Queue Length 95th (ft)	6	1	0	0	0	0
Control Delay (s)	11.2	13.7	0.0	0.0	0.0	0.0
Lane LOS	B	B				
Approach Delay (s)	11.2	13.7	0.0		0.0	
Approach LOS	B	B				

Intersection Summary			
Average Delay	0.3		
Intersection Capacity Utilization	43.8%	ICU Level of Service	A
Analysis Period (min)	15		

Movement	EBL	EBR	NBL	NBT	SBT	SBR
Lane Configurations						
Sign Control	Stop			Free	Free	
Grade	0%			0%	0%	
Volume (veh/h)	0	52	0	1217	638	157
Peak Hour Factor	0.95	0.95	0.95	0.95	0.95	0.95
Hourly flow rate (vph)	0	55	0	1281	672	165
Pedestrians						
Lane Width (ft)						
Walking Speed (ft/s)						
Percent Blockage						
Right turn flare (veh)						
Median type	None					
Median storage veh)						
Upstream signal (ft)					936	
pX, platoon unblocked						
vC, conflicting volume	1395	418	837			
vC1, stage 1 conf vol						
vC2, stage 2 conf vol						
vCu, unblocked vol	1395	418	837			
tC, single (s)	6.8	6.9	4.1			
tC, 2 stage (s)						
tF (s)	3.5	3.3	2.2			
p0 queue free %	100	91	100			
cM capacity (veh/h)	132	583	793			

Direction, Lane #	EB 1	NB 1	NB 2	SB 1	SB 2
Volume Total	55	641	641	448	389
Volume Left	0	0	0	0	0
Volume Right	55	0	0	0	165
cSH	583	1700	1700	1700	1700
Volume to Capacity	0.09	0.38	0.38	0.26	0.23
Queue Length 95th (ft)	8	0	0	0	0
Control Delay (s)	11.8	0.0	0.0	0.0	0.0
Lane LOS	B				
Approach Delay (s)	11.8	0.0		0.0	
Approach LOS	B				

Intersection Summary			
Average Delay	0.3		
Intersection Capacity Utilization	37.0%	ICU Level of Service	A
Analysis Period (min)	15		

Movement	EBL	EBR	NBL	NBT	SBT	SBR
Lane Configurations						
Ideal Flow (vphpl)	1900	1900	1900	1900	1900	1900
Total Lost time (s)	4.0			4.0	4.0	
Lane Util. Factor	1.00			0.95	0.95	
Frt	0.90			1.00	1.00	
Flt Protected	0.99			0.99	1.00	
Satd. Flow (prot)	1653			3498	3527	
Flt Permitted	0.99			0.63	1.00	
Satd. Flow (perm)	1653			2213	3527	
Volume (vph)	26	77	285	932	718	17
Peak-hour factor, PHF	0.95	0.95	0.95	0.95	0.95	0.95
Adj. Flow (vph)	27	81	300	981	756	18
RTOR Reduction (vph)	69	0	0	0	1	0
Lane Group Flow (vph)	39	0	0	1281	773	0
Turn Type			Perm			
Protected Phases	4			2	6	
Permitted Phases			2			
Actuated Green, G (s)	10.5			64.1	66.1	
Effective Green, g (s)	13.5			67.1	67.1	
Actuated g/C Ratio	0.15			0.76	0.76	
Clearance Time (s)	7.0			7.0	5.0	
Vehicle Extension (s)	2.0			2.0	2.0	
Lane Grp Cap (vph)	252			1676	2671	
v/s Ratio Prot	c0.02				0.22	
v/s Ratio Perm				c0.58		
v/c Ratio	0.16			0.76	0.29	
Uniform Delay, d1	32.6			6.2	3.3	
Progression Factor	1.00			1.00	1.00	
Incremental Delay, d2	0.1			1.9	0.0	
Delay (s)	32.7			8.1	3.4	
Level of Service	C			A	A	
Approach Delay (s)	32.7			8.1	3.4	
Approach LOS	C			A	A	

Intersection Summary			
HCM Average Control Delay	7.6	HCM Level of Service	A
HCM Volume to Capacity ratio	0.66		
Actuated Cycle Length (s)	88.6	Sum of lost time (s)	8.0
Intersection Capacity Utilization	72.8%	ICU Level of Service	C
Analysis Period (min)	15		
c Critical Lane Group			

Movement	EBL	EBR	NBL	NBT	SBT	SBR
Lane Configurations						
Ideal Flow (vphpl)	1900	1900	1900	1900	1900	1900
Total Lost time (s)	4.0			4.0	4.0	
Lane Util. Factor	1.00			0.95	0.95	
Frt	0.90			1.00	0.99	
Flt Protected	0.99			0.98	1.00	
Satd. Flow (prot)	1649			3485	3520	
Flt Permitted	0.99			0.63	1.00	
Satd. Flow (perm)	1649			2243	3520	
Volume (vph)	40	138	298	660	597	23
Peak-hour factor, PHF	0.95	0.95	0.95	0.95	0.95	0.95
Adj. Flow (vph)	42	145	314	695	628	24
RTOR Reduction (vph)	89	0	0	0	4	0
Lane Group Flow (vph)	98	0	0	1009	648	0
Turn Type			Perm			
Protected Phases	4			2	6	
Permitted Phases			2			
Actuated Green, G (s)	9.1			39.7	39.7	
Effective Green, g (s)	12.1			42.7	42.7	
Actuated g/C Ratio	0.19			0.68	0.68	
Clearance Time (s)	7.0			7.0	7.0	
Vehicle Extension (s)	2.0			2.0	2.0	
Lane Grp Cap (vph)	318			1525	2393	
v/s Ratio Prot	c0.06				0.18	
v/s Ratio Perm				c0.45		
v/c Ratio	0.31			0.66	0.27	
Uniform Delay, d1	21.8			5.8	3.9	
Progression Factor	1.00			1.00	1.00	
Incremental Delay, d2	0.2			0.8	0.0	
Delay (s)	22.0			6.7	4.0	
Level of Service	C			A	A	
Approach Delay (s)	22.0			6.7	4.0	
Approach LOS	C			A	A	

Intersection Summary			
HCM Average Control Delay	7.3	HCM Level of Service	A
HCM Volume to Capacity ratio	0.58		
Actuated Cycle Length (s)	62.8	Sum of lost time (s)	8.0
Intersection Capacity Utilization	64.9%	ICU Level of Service	C
Analysis Period (min)	15		

c Critical Lane Group

Movement	EBL	EBR	NBL	NBT	SBT	SBR
Lane Configurations						
Ideal Flow (vphpl)	1900	1900	1900	1900	1900	1900
Total Lost time (s)	4.0			4.0	4.0	
Lane Util. Factor	1.00			0.95	0.95	
Frt	0.89			1.00	0.99	
Flt Protected	0.99			0.98	1.00	
Satd. Flow (prot)	1645			3465	3519	
Flt Permitted	0.99			0.64	1.00	
Satd. Flow (perm)	1645			2257	3519	
Volume (vph)	34	138	298	403	482	19
Peak-hour factor, PHF	0.95	0.95	0.95	0.95	0.95	0.95
Adj. Flow (vph)	36	145	314	424	507	20
RTOR Reduction (vph)	98	0	0	0	4	0
Lane Group Flow (vph)	83	0	0	738	523	0
Turn Type			Perm			
Protected Phases	4			2	6	
Permitted Phases			2			
Actuated Green, G (s)	9.6			30.6	30.6	
Effective Green, g (s)	12.6			33.6	33.6	
Actuated g/C Ratio	0.23			0.62	0.62	
Clearance Time (s)	7.0			7.0	7.0	
Vehicle Extension (s)	2.0			2.0	2.0	
Lane Grp Cap (vph)	382			1399	2182	
v/s Ratio Prot	c0.05				0.15	
v/s Ratio Perm				c0.33		
v/c Ratio	0.22			0.53	0.24	
Uniform Delay, d1	16.8			5.8	4.6	
Progression Factor	1.00			1.00	1.00	
Incremental Delay, d2	0.1			0.2	0.0	
Delay (s)	16.9			6.0	4.6	
Level of Service	B			A	A	
Approach Delay (s)	16.9			6.0	4.6	
Approach LOS	B			A	A	

Intersection Summary			
HCM Average Control Delay	6.9	HCM Level of Service	A
HCM Volume to Capacity ratio	0.44		
Actuated Cycle Length (s)	54.2	Sum of lost time (s)	8.0
Intersection Capacity Utilization	54.1%	ICU Level of Service	A
Analysis Period (min)	15		

c Critical Lane Group

Movement	EBL	EBT	WBT	WBR	SWL	SWR
Lane Configurations		↑↑	↑↑			↱↑
Sign Control		Free	Free		Stop	
Grade		0%	0%		0%	
Volume (veh/h)	0	356	548	0	0	436
Peak Hour Factor	0.95	0.95	0.95	0.95	0.95	0.95
Hourly flow rate (vph)	0	375	577	0	0	459
Pedestrians						
Lane Width (ft)						
Walking Speed (ft/s)						
Percent Blockage						
Right turn flare (veh)						
Median type					None	
Median storage veh)						
Upstream signal (ft)		411				
pX, platoon unblocked						
vC, conflicting volume	577				764	288
vC1, stage 1 conf vol						
vC2, stage 2 conf vol						
vCu, unblocked vol	577				764	288
tC, single (s)	4.1				6.8	6.9
tC, 2 stage (s)						
tF (s)	2.2				3.5	3.3
p0 queue free %	100				100	35
cM capacity (veh/h)	993				340	708

Direction, Lane #	EB 1	EB 2	WB 1	WB 2	SW 1	SW 2
Volume Total	187	187	288	288	229	229
Volume Left	0	0	0	0	0	0
Volume Right	0	0	0	0	229	229
cSH	1700	1700	1700	1700	708	708
Volume to Capacity	0.11	0.11	0.17	0.17	0.32	0.32
Queue Length 95th (ft)	0	0	0	0	35	35
Control Delay (s)	0.0	0.0	0.0	0.0	12.5	12.5
Lane LOS					B	B
Approach Delay (s)	0.0		0.0		12.5	
Approach LOS					B	

Intersection Summary				
Average Delay		4.1		
Intersection Capacity Utilization		37.1%	ICU Level of Service	A
Analysis Period (min)		15		

Movement	EBL	EBR	NBL	NBT	SBT	SBR
Lane Configurations	↱			↑↑	↑↑	
Sign Control	Stop			Free	Free	
Grade	0%			0%	0%	
Volume (veh/h)	34	136	308	130	364	87
Peak Hour Factor	0.95	0.95	0.95	0.95	0.95	0.95
Hourly flow rate (vph)	36	143	324	137	383	92
Pedestrians						
Lane Width (ft)						
Walking Speed (ft/s)						
Percent Blockage						
Right turn flare (veh)						
Median type	None					
Median storage veh)						
Upstream signal (ft)				506		
pX, platoon unblocked						
vC, conflicting volume	1146	237	475			
vC1, stage 1 conf vol						
vC2, stage 2 conf vol						
vCu, unblocked vol	1146	237	475			
tC, single (s)	6.8	6.9	4.1			
tC, 2 stage (s)						
tF (s)	3.5	3.3	2.2			
p0 queue free %	74	81	70			
cM capacity (veh/h)	135	764	1084			

Direction, Lane #	EB 1	NB 1	NB 2	SB 1	SB 2
Volume Total	179	370	91	255	219
Volume Left	36	324	0	0	0
Volume Right	143	0	0	0	92
cSH	396	1084	1700	1700	1700
Volume to Capacity	0.45	0.30	0.05	0.15	0.13
Queue Length 95th (ft)	57	32	0	0	0
Control Delay (s)	21.4	8.9	0.0	0.0	0.0
Lane LOS	C	A			
Approach Delay (s)	21.4	7.1		0.0	
Approach LOS	C				

Intersection Summary				
Average Delay		6.4		
Intersection Capacity Utilization		50.2%	ICU Level of Service	A
Analysis Period (min)		15		

HCM Signalized Intersection Capacity Analysis
5: Route 7 & Countryside Blvd.

Kincora
Total Future 2015

Movement	EBL	EBT	EBR	WBL	WBT	WBR	NBL	NBT	NBR	SBL	SBT	SBR
Lane Configurations												
Ideal Flow (vphpl)	1900	1900	1900	1900	1900	1900	1900	1900	1900	1900	1900	1900
Total Lost time (s)	3.0	3.0	3.0	3.0	3.0	3.0	3.0	3.0	3.0	3.0	3.0	3.0
Lane Util. Factor	0.97	0.86	1.00	0.97	0.86	1.00	0.97	0.95	1.00	0.97	0.95	1.00
Frt	1.00	1.00	0.85	1.00	1.00	0.85	1.00	1.00	0.85	1.00	1.00	0.85
Flt Protected	0.95	1.00	1.00	0.95	1.00	1.00	0.95	1.00	1.00	0.95	1.00	1.00
Satd. Flow (prot)	3433	6408	1583	3433	6408	1583	3433	3539	1583	3433	3539	1583
Flt Permitted	0.95	1.00	1.00	0.95	1.00	1.00	0.95	1.00	1.00	0.95	1.00	1.00
Satd. Flow (perm)	3433	6408	1583	3433	6408	1583	3433	3539	1583	3433	3539	1583
Volume (vph)	503	2574	168	648	2633	214	257	148	398	186	163	311
Peak-hour factor, PHF	0.95	0.95	0.95	0.95	0.95	0.95	0.95	0.95	0.95	0.95	0.95	0.95
Adj. Flow (vph)	529	2709	177	682	2772	225	271	156	419	196	172	327
RTOR Reduction (vph)	0	0	0	0	0	47	0	0	0	0	0	2
Lane Group Flow (vph)	529	2709	177	682	2772	178	271	156	419	196	172	325
Turn Type	Prot		Free	Prot		pm+ov	Prot		Free	Prot		pm+ov
Protected Phases	1	6		5	2	3	7	4		3	8	1
Permitted Phases			Free			2			Free			8
Actuated Green, G (s)	27.2	64.7	150.0	34.2	71.7	83.6	10.0	11.2	150.0	11.9	13.1	40.3
Effective Green, g (s)	31.2	68.7	150.0	38.2	75.7	91.6	14.0	15.2	150.0	15.9	17.1	48.3
Actuated g/C Ratio	0.21	0.46	1.00	0.25	0.50	0.61	0.09	0.10	1.00	0.11	0.11	0.32
Clearance Time (s)	7.0	7.0		7.0	7.0	7.0	7.0	7.0		7.0	7.0	7.0
Vehicle Extension (s)	2.0	2.0		3.0	2.0	2.0	2.0	2.0		2.0	2.0	2.0
Lane Grp Cap (vph)	714	2935	1583	874	3234	998	320	359	1583	364	403	541
v/s Ratio Prot	0.15	c0.42		c0.20	0.43	0.02	c0.08	0.04		0.06	0.05	c0.12
v/s Ratio Perm			0.11			0.09			c0.26			0.08
v/c Ratio	0.74	0.92	0.11	0.78	0.86	0.18	0.85	0.43	0.26	0.54	0.43	0.60
Uniform Delay, d1	55.6	38.2	0.0	52.0	32.4	12.8	66.9	63.4	0.0	63.6	61.9	42.7
Progression Factor	1.00	1.00	1.00	1.00	1.00	1.00	1.00	1.00	1.00	1.00	1.00	1.00
Incremental Delay, d2	3.6	6.2	0.1	4.6	3.2	0.0	17.6	0.3	0.4	0.8	0.3	1.3
Delay (s)	59.3	44.4	0.1	56.6	35.6	12.8	84.6	63.7	0.4	64.3	62.2	44.0
Level of Service	E	D	A	E	D	B	F	E	A	E	E	D
Approach Delay (s)		44.4			38.1			39.0			54.2	
Approach LOS		D			D			D			D	

Intersection Summary			
HCM Average Control Delay	42.0	HCM Level of Service	D
HCM Volume to Capacity ratio	0.82		
Actuated Cycle Length (s)	150.0	Sum of lost time (s)	9.0
Intersection Capacity Utilization	81.5%	ICU Level of Service	D
Analysis Period (min)	15		

c Critical Lane Group

HCM Signalized Intersection Capacity Analysis
6: Route 7 & Palisade Parkway

Kincora
Total Future 2015

Movement	EBL	EBT	EBR	WBL	WBT	WBR	NBL	NBT	NBR	SBL	SBT	SBR
Lane Configurations												
Ideal Flow (vphpl)	1900	1900	1900	1900	1900	1900	1900	1900	1900	1900	1900	1900
Total Lost time (s)	3.0	3.0	3.0	3.0	3.0	3.0	3.0	3.0	3.0	3.0	3.0	3.0
Lane Util. Factor	0.97	0.86	1.00	1.00	0.86	1.00	0.97	1.00	1.00	0.97	1.00	1.00
Frt	1.00	1.00	0.85	1.00	1.00	0.85	1.00	1.00	0.85	1.00	1.00	0.85
Flt Protected	0.95	1.00	1.00	0.95	1.00	1.00	0.95	1.00	1.00	0.95	1.00	1.00
Satd. Flow (prot)	3433	6408	1583	1770	6408	1583	3433	1863	1583	3433	1863	1583
Flt Permitted	0.95	1.00	1.00	0.95	1.00	1.00	0.95	1.00	1.00	0.95	1.00	1.00
Satd. Flow (perm)	3433	6408	1583	1770	6408	1583	3433	1863	1583	3433	1863	1583
Volume (vph)	263	2740	25	74	2833	161	391	97	234	225	77	234
Peak-hour factor, PHF	0.95	0.95	0.95	0.95	0.95	0.95	0.95	0.95	0.95	0.95	0.95	0.95
Adj. Flow (vph)	277	2884	26	78	2982	169	412	102	246	237	81	246
RTOR Reduction (vph)	0	0	0	0	0	0	0	0	8	0	0	5
Lane Group Flow (vph)	277	2884	26	78	2982	169	412	102	238	237	81	241
Turn Type	Prot		Free	Prot		Free	Prot		pm+ov	Prot		pm+ov
Protected Phases	1	6		5	2		7	4	5	3	8	1
Permitted Phases			Free			Free			4			8
Actuated Green, G (s)	11.7	60.2	120.0	9.3	57.8	120.0	17.7	12.5	21.8	10.0	4.8	16.5
Effective Green, g (s)	15.7	64.2	120.0	13.3	61.8	120.0	21.7	16.5	29.8	14.0	8.8	24.5
Actuated g/C Ratio	0.13	0.54	1.00	0.11	0.51	1.00	0.18	0.14	0.25	0.12	0.07	0.20
Clearance Time (s)	7.0	7.0		7.0	7.0		7.0	7.0	7.0	7.0	7.0	7.0
Vehicle Extension (s)	2.0	4.0		2.0	4.0		3.0	3.0	2.0	3.0	3.0	2.0
Lane Grp Cap (vph)	449	3428	1583	196	3300	1583	621	256	433	401	137	363
v/s Ratio Prot	0.08	0.45		0.04	c0.47		c0.12	0.05	c0.06	0.07	0.04	c0.09
v/s Ratio Perm			0.02			c0.11			0.09			0.07
v/c Ratio	0.62	0.84	0.02	0.40	0.90	0.11	0.66	0.40	0.55	0.59	0.59	0.66
Uniform Delay, d1	49.3	23.6	0.0	49.6	26.4	0.0	45.8	47.2	39.3	50.3	53.9	44.0
Progression Factor	1.00	1.00	1.00	1.00	1.00	1.00	1.00	1.00	1.00	1.00	1.00	1.00
Incremental Delay, d2	1.8	2.7	0.0	0.5	4.6	0.1	2.7	1.0	0.8	2.3	6.7	3.5
Delay (s)	51.1	26.3	0.0	50.1	31.0	0.1	48.4	48.2	40.0	52.6	60.5	47.5
Level of Service	D	C	A	D	C	A	D	D	D	D	E	D
Approach Delay (s)		28.2			29.9			45.7			51.5	
Approach LOS		C			C			D			D	

Intersection Summary			
HCM Average Control Delay	32.3	HCM Level of Service	C
HCM Volume to Capacity ratio	0.77		
Actuated Cycle Length (s)	120.0	Sum of lost time (s)	6.0
Intersection Capacity Utilization	76.7%	ICU Level of Service	D
Analysis Period (min)	15		

c Critical Lane Group

Movement	WBL	WBR	NBT	NBR	SBL	SBT
Lane Configurations						
Ideal Flow (vphpl)	1900	1900	1900	1900	1900	1900
Total Lost time (s)	3.0	3.0	3.0		3.0	3.0
Lane Util. Factor	1.00	1.00	0.95		1.00	0.95
Frt	1.00	0.85	0.98		1.00	1.00
Flt Protected	0.95	1.00	1.00		0.95	1.00
Satd. Flow (prot)	1770	1583	3459		1770	3539
Flt Permitted	0.95	1.00	1.00		0.21	1.00
Satd. Flow (perm)	1770	1583	3459		395	3539
Volume (vph)	112	262	656	117	250	571
Peak-hour factor, PHF	0.95	0.95	0.95	0.95	0.95	0.95
Adj. Flow (vph)	118	276	691	123	263	601
RTOR Reduction (vph)	0	100	13	0	0	0
Lane Group Flow (vph)	118	176	801	0	263	601
Turn Type		pm+ov			pm+pt	
Protected Phases	4	1	2		1	6
Permitted Phases		4			6	
Actuated Green, G (s)	6.9	15.5	18.9		34.5	34.5
Effective Green, g (s)	10.9	23.5	23.4		39.0	39.0
Actuated g/C Ratio	0.19	0.42	0.42		0.70	0.70
Clearance Time (s)	7.0	7.0	7.5		7.0	7.5
Vehicle Extension (s)	2.0	2.0	2.0		2.0	2.0
Lane Grp Cap (vph)	345	750	1448		586	2469
v/s Ratio Prot	c0.07	0.05	c0.23		c0.10	0.17
v/s Ratio Perm		0.06			0.21	
v/c Ratio	0.34	0.24	0.55		0.45	0.24
Uniform Delay, d1	19.4	10.4	12.3		4.6	3.1
Progression Factor	1.00	1.00	1.00		1.00	1.00
Incremental Delay, d2	0.2	0.1	0.3		0.2	0.0
Delay (s)	19.6	10.5	12.6		4.8	3.1
Level of Service	B	B	B		A	A
Approach Delay (s)	13.2		12.6			3.6
Approach LOS	B		B			A

Intersection Summary			
HCM Average Control Delay	8.9	HCM Level of Service	A
HCM Volume to Capacity ratio	0.48		
Actuated Cycle Length (s)	55.9	Sum of lost time (s)	9.0
Intersection Capacity Utilization	51.9%	ICU Level of Service	A
Analysis Period (min)	15		

c Critical Lane Group

Movement	EBL	EBT	EBR	WBL	WBT	WBR	NBL	NBT	NBR	SBL	SBT	SBR
Lane Configurations												
Ideal Flow (vphpl)	1900	1900	1900	1900	1900	1900	1900	1900	1900	1900	1900	1900
Total Lost time (s)		4.0	4.0		4.0	4.0	4.0	4.0	4.0	4.0	4.0	4.0
Lane Util. Factor		1.00	1.00		1.00	1.00	1.00	0.95	1.00	1.00	0.95	1.00
Frt		1.00	0.85		1.00	0.85	1.00	1.00	0.85	1.00	1.00	0.85
Flt Protected		0.96	1.00		0.95	1.00	0.95	1.00	1.00	0.95	1.00	1.00
Satd. Flow (prot)		1779	1583		1770	1583	1770	3539	1583	1770	3539	1583
Flt Permitted		0.71	1.00		0.74	1.00	0.39	1.00	1.00	0.33	1.00	1.00
Satd. Flow (perm)		1323	1583		1370	1583	723	3539	1583	614	3539	1583
Volume (vph)	29	2	82	37	0	30	148	794	83	29	576	72
Peak-hour factor, PHF	0.95	0.95	0.95	0.95	0.95	0.95	0.95	0.95	0.95	0.95	0.95	0.95
Adj. Flow (vph)	31	2	86	39	0	32	156	836	87	31	606	76
RTOR Reduction (vph)	0	0	70	0	0	27	0	0	25	0	0	24
Lane Group Flow (vph)	0	33	16	0	39	5	156	836	62	31	606	52
Turn Type	Perm		pm+ov	Perm		pm+ov	pm+pt		Perm	pm+pt		Perm
Protected Phases		4	5		8	1	5	2		1	6	
Permitted Phases	4		4	8		8	2		2	6		6
Actuated Green, G (s)		4.9	10.9		4.9	7.9	67.1	61.1	61.1	61.1	58.1	58.1
Effective Green, g (s)		7.9	16.9		7.9	13.9	73.1	64.1	64.1	67.1	61.1	61.1
Actuated g/C Ratio		0.09	0.19		0.09	0.15	0.81	0.71	0.71	0.75	0.68	0.68
Clearance Time (s)		7.0	7.0		7.0	7.0	7.0	7.0	7.0	7.0	7.0	7.0
Vehicle Extension (s)		2.0	2.0		2.0	2.0	2.0	2.0	2.0	2.0	2.0	2.0
Lane Grp Cap (vph)		116	368		120	315	692	2521	1127	535	2403	1075
v/s Ratio Prot			0.00			0.00	c0.02	c0.24		0.00	0.17	
v/s Ratio Perm		0.02	0.01		c0.03	0.00	0.16		0.04	0.04		0.03
v/c Ratio		0.28	0.04		0.33	0.02	0.23	0.33	0.05	0.06	0.25	0.05
Uniform Delay, d1		38.4	29.9		38.5	32.3	1.9	4.9	3.9	3.0	5.6	4.8
Progression Factor		1.00	1.00		1.00	1.00	1.00	1.00	1.00	1.00	1.00	1.00
Incremental Delay, d2		0.5	0.0		0.6	0.0	0.1	0.4	0.1	0.0	0.3	0.1
Delay (s)		38.9	30.0		39.1	32.3	2.0	5.2	4.0	3.0	5.9	4.9
Level of Service		D	C		D	C	A	A	A	A	A	A
Approach Delay (s)		32.4			36.0			4.7			5.6	
Approach LOS		C			D			A			A	

Intersection Summary			
HCM Average Control Delay	7.8	HCM Level of Service	A
HCM Volume to Capacity ratio	0.33		
Actuated Cycle Length (s)	90.0	Sum of lost time (s)	12.0
Intersection Capacity Utilization	44.0%	ICU Level of Service	A
Analysis Period (min)	15		

c Critical Lane Group

HCM Signalized Intersection Capacity Analysis
10: Gloucester Parkway & Ashburn Village Blvd.

Kincora
Total Future 2015

Movement	EBL	EBT	EBR	WBL	WBT	WBR	NBL	NBT	NBR	SBL	SBT	SBR
Lane Configurations												
Ideal Flow (vphpl)	1900	1900	1900	1900	1900	1900	1900	1900	1900	1900	1900	1900
Total Lost time (s)	3.0	3.0	3.0	3.0	3.0	3.0	3.0	3.0	3.0	3.0	3.0	3.0
Lane Util. Factor	1.00	0.95	1.00	0.97	0.95	1.00	0.97	0.95	1.00	0.97	0.95	1.00
Frt	1.00	1.00	0.85	1.00	1.00	0.85	1.00	1.00	0.85	1.00	1.00	0.85
Flt Protected	0.95	1.00	1.00	0.95	1.00	1.00	0.95	1.00	1.00	0.95	1.00	1.00
Satd. Flow (prot)	1770	3539	1583	3433	3539	1583	3433	3539	1583	3433	3539	1583
Flt Permitted	0.95	1.00	1.00	0.95	1.00	1.00	0.95	1.00	1.00	0.95	1.00	1.00
Satd. Flow (perm)	1770	3539	1583	3433	3539	1583	3433	3539	1583	3433	3539	1583
Volume (vph)	199	133	460	191	240	306	601	902	146	164	876	360
Peak-hour factor, PHF	0.95	0.95	0.95	0.95	0.95	0.95	0.95	0.95	0.95	0.95	0.95	0.95
Adj. Flow (vph)	209	140	484	201	253	322	633	949	154	173	922	379
RTOR Reduction (vph)	0	0	0	0	0	0	0	0	0	0	0	0
Lane Group Flow (vph)	209	140	484	201	253	322	633	949	154	173	922	379
Turn Type	Prot		Free	Prot		Free	Prot		Free	Prot		Free
Protected Phases	7	4		3	8		5	2		1	6	
Permitted Phases			Free			Free			Free			Free
Actuated Green, G (s)	17.7	21.3	126.8	12.8	16.4	126.8	20.3	52.9	126.8	11.8	44.4	126.8
Effective Green, g (s)	21.7	25.3	126.8	16.8	20.4	126.8	24.3	56.9	126.8	15.8	48.4	126.8
Actuated g/C Ratio	0.17	0.20	1.00	0.13	0.16	1.00	0.19	0.45	1.00	0.12	0.38	1.00
Clearance Time (s)	7.0	7.0		7.0	7.0		7.0	7.0		7.0	7.0	
Vehicle Extension (s)	3.0	3.0		3.0	3.0		3.0	5.0		3.0	5.0	
Lane Grp Cap (vph)	303	706	1583	455	569	1583	658	1588	1583	428	1351	1583
v/s Ratio Prot	c0.12	0.04		0.06	c0.07		c0.18	0.27		0.05	c0.26	
v/s Ratio Perm			0.31			0.20			0.10			0.24
v/c Ratio	0.69	0.20	0.31	0.44	0.44	0.20	0.96	0.60	0.10	0.40	0.68	0.24
Uniform Delay, d1	49.4	42.3	0.0	50.7	48.1	0.0	50.8	26.3	0.0	51.2	32.8	0.0
Progression Factor	1.00	1.00	1.00	1.00	1.00	1.00	1.00	1.00	1.00	1.00	1.00	1.00
Incremental Delay, d2	6.4	0.1	0.5	0.7	0.6	0.3	25.8	0.9	0.1	0.6	1.9	0.4
Delay (s)	55.8	42.4	0.5	51.4	48.6	0.3	76.6	27.2	0.1	51.8	34.6	0.4
Level of Service	E	D	A	D	D	A	E	C	A	D	C	A
Approach Delay (s)		21.4			29.3			42.8			27.8	
Approach LOS		C			C			D			C	

Intersection Summary			
HCM Average Control Delay	32.4	HCM Level of Service	C
HCM Volume to Capacity ratio	0.70		
Actuated Cycle Length (s)	126.8	Sum of lost time (s)	12.0
Intersection Capacity Utilization	78.2%	ICU Level of Service	D
Analysis Period (min)	15		

c Critical Lane Group

HCM Signalized Intersection Capacity Analysis
11: Smith Switch Road & Loudoun County Parkway

Kincora
Total Future 2015

Movement	EBL	EBR	NBL	NBT	SBT	SBR
Lane Configurations						
Ideal Flow (vphpl)	1900	1900	1900	1900	1900	1900
Total Lost time (s)	4.0			4.0	4.0	
Lane Util. Factor	0.97			0.95	0.95	
Frt	0.97			1.00	0.99	
Flt Protected	0.96			1.00	1.00	
Satd. Flow (prot)	3367			3534	3512	
Flt Permitted	0.96			0.70	1.00	
Satd. Flow (perm)	3367			2474	3512	
Volume (vph)	204	54	57	1849	1864	101
Peak-hour factor, PHF	0.95	0.95	0.95	0.95	0.95	0.95
Adj. Flow (vph)	215	57	60	1946	1962	106
RTOR Reduction (vph)	23	0	0	0	4	0
Lane Group Flow (vph)	249	0	0	2006	2064	0
Turn Type			Perm			
Protected Phases	4			2	6	
Permitted Phases			2			
Actuated Green, G (s)	11.0			85.0	85.0	
Effective Green, g (s)	14.0			88.0	88.0	
Actuated g/C Ratio	0.13			0.80	0.80	
Clearance Time (s)	7.0			7.0	7.0	
Vehicle Extension (s)	4.0			3.0	3.0	
Lane Grp Cap (vph)	429			1979	2810	
v/s Ratio Prot	c0.07				0.59	
v/s Ratio Perm				c0.81		
v/c Ratio	0.58			1.01	0.73	
Uniform Delay, d1	45.2			11.0	5.3	
Progression Factor	1.00			1.00	1.00	
Incremental Delay, d2	5.7			23.7	1.0	
Delay (s)	50.9			34.7	6.4	
Level of Service	D			C	A	
Approach Delay (s)	50.9			34.7	6.4	
Approach LOS	D			C	A	

Intersection Summary			
HCM Average Control Delay	22.2	HCM Level of Service	C
HCM Volume to Capacity ratio	0.95		
Actuated Cycle Length (s)	110.0	Sum of lost time (s)	8.0
Intersection Capacity Utilization	107.3%	ICU Level of Service	G
Analysis Period (min)	15		

c Critical Lane Group

HCM Signalized Intersection Capacity Analysis
13: Nokes Blvd & Atlantic Blvd

Kincora
Total Future 2015

Movement	EBL	EBT	EBR	WBL	WBT	WBR	NBL	NBT	NBR	SBL	SBT	SBR
Lane Configurations												
Ideal Flow (vphpl)	1900	1900	1900	1900	1900	1900	1900	1900	1900	1900	1900	1900
Total Lost time (s)	4.0	4.0	4.0	3.0	4.0	3.0	4.0	3.0	3.0	3.0	3.0	4.0
Lane Util. Factor	0.97	0.95	1.00	0.97	0.95	1.00	0.97	0.95	1.00	0.97	0.95	1.00
Frt	1.00	1.00	0.85	1.00	1.00	0.85	1.00	1.00	0.85	1.00	1.00	0.85
Flt Protected	0.95	1.00	1.00	0.95	1.00	1.00	0.95	1.00	1.00	0.95	1.00	1.00
Satd. Flow (prot)	3433	3539	1583	3433	3539	1583	3433	3539	1583	3433	3539	1583
Flt Permitted	0.95	1.00	1.00	0.95	1.00	1.00	0.95	1.00	1.00	0.95	1.00	1.00
Satd. Flow (perm)	3433	3539	1583	3433	3539	1583	3433	3539	1583	3433	3539	1583
Volume (vph)	431	607	433	223	609	90	1129	346	287	68	206	486
Peak-hour factor, PHF	0.95	0.95	0.95	0.95	0.95	0.95	0.95	0.95	0.95	0.95	0.95	0.95
Adj. Flow (vph)	454	639	456	235	641	95	1188	364	302	72	217	512
RTOR Reduction (vph)	0	0	0	0	0	0	0	0	50	0	0	0
Lane Group Flow (vph)	454	639	456	235	641	95	1188	364	252	72	217	512
Turn Type	Prot		Free	Prot		Free	Prot		pm+ov	Prot		Free
Protected Phases	1	6		5	2		7	4	5	3	8	
Permitted Phases			Free			Free			4			Free
Actuated Green, G (s)	12.5	21.0	100.0	8.1	16.6	100.0	36.0	39.4	47.5	4.0	7.4	100.0
Effective Green, g (s)	15.5	24.0	100.0	12.1	19.6	100.0	39.0	42.9	55.0	8.0	10.9	100.0
Actuated g/C Ratio	0.16	0.24	1.00	0.12	0.20	1.00	0.39	0.43	0.55	0.08	0.11	1.00
Clearance Time (s)	7.0	7.0		7.0	7.0		7.0	6.5	7.0	7.0	6.5	
Vehicle Extension (s)	2.5	4.0		2.5	4.0		2.5	2.5	2.5	2.5	2.5	
Lane Grp Cap (vph)	532	849	1583	415	694	1583	1339	1518	918	275	386	1583
v/s Ratio Prot	c0.13	0.18		0.07	c0.18		c0.35	0.10	0.03	0.02	c0.06	
v/s Ratio Perm			0.29			0.06			0.13			0.32
v/c Ratio	0.85	0.75	0.29	0.57	0.92	0.06	0.89	0.24	0.27	0.26	0.56	0.32
Uniform Delay, d1	41.1	35.2	0.0	41.5	39.5	0.0	28.4	18.2	11.9	43.2	42.3	0.0
Progression Factor	1.00	1.00	1.00	1.00	1.00	1.00	1.00	1.00	1.00	1.00	1.00	1.00
Incremental Delay, d2	12.4	6.1	0.5	1.4	19.9	0.1	7.4	0.1	0.1	0.4	1.5	0.5
Delay (s)	53.6	41.4	0.5	42.9	59.3	0.1	35.9	18.2	12.0	43.6	43.8	0.5
Level of Service	D	D	A	D	E	A	D	B	B	D	D	A
Approach Delay (s)		32.9			49.6			28.5			16.1	
Approach LOS		C			D			C			B	

Intersection Summary

HCM Average Control Delay	31.9	HCM Level of Service	C
HCM Volume to Capacity ratio	0.85		
Actuated Cycle Length (s)	100.0	Sum of lost time (s)	15.0
Intersection Capacity Utilization	80.4%	ICU Level of Service	D
Analysis Period (min)	15		

c Critical Lane Group

HCM Signalized Intersection Capacity Analysis
14: Nokes Blvd. & Cascades Parkway

Kincora
Total Future 2015

Movement	EBL	EBT	EBR	WBL	WBT	WBR	NBL	NBT	NBR	SBL	SBT	SBR
Lane Configurations												
Ideal Flow (vphpl)	1900	1900	1900	1900	1900	1900	1900	1900	1900	1900	1900	1900
Total Lost time (s)	3.0	3.0	3.0	3.0	3.0	3.0	3.0	3.0	3.0	3.0	3.0	3.0
Lane Util. Factor	0.97	1.00	1.00	1.00	0.95	1.00	0.97	0.95	1.00	1.00	0.95	1.00
Frt	1.00	1.00	0.85	1.00	1.00	0.85	1.00	1.00	0.85	1.00	1.00	0.85
Flt Protected	0.95	1.00	1.00	0.95	1.00	1.00	0.95	1.00	1.00	0.95	1.00	1.00
Satd. Flow (prot)	3433	1863	1583	1770	3539	1583	3433	3539	1583	1770	3539	1583
Flt Permitted	0.95	1.00	1.00	0.11	1.00	1.00	0.95	1.00	1.00	0.95	1.00	1.00
Satd. Flow (perm)	3433	1863	1583	201	3539	1583	3433	3539	1583	1770	3539	1583
Volume (vph)	329	447	260	238	196	33	244	1273	298	4	909	258
Peak-hour factor, PHF	0.95	0.95	0.95	0.95	0.95	0.95	0.95	0.95	0.95	0.95	0.95	0.95
Adj. Flow (vph)	346	471	274	251	206	35	257	1340	314	4	957	272
RTOR Reduction (vph)	0	0	196	0	0	25	0	0	99	0	0	182
Lane Group Flow (vph)	346	471	78	251	206	10	257	1340	215	4	957	90
Turn Type	Prot		Perm	pm+pt		Perm	Prot		Perm	Prot		Perm
Protected Phases	7	4		3	8		1	6		5	2	
Permitted Phases			4	8		8			6			2
Actuated Green, G (s)	17.7	31.6	31.6	50.1	32.0	32.0	11.6	48.2	48.2	1.8	38.4	38.4
Effective Green, g (s)	21.7	36.6	36.6	59.1	37.0	37.0	15.6	52.7	52.7	5.8	42.9	42.9
Actuated g/C Ratio	0.17	0.28	0.28	0.46	0.29	0.29	0.12	0.41	0.41	0.04	0.33	0.33
Clearance Time (s)	7.0	8.0	8.0	7.0	8.0	8.0	7.0	7.5	7.5	7.0	7.5	7.5
Vehicle Extension (s)	3.0	3.0	3.0	3.0	3.0	3.0	3.0	3.0	3.0	3.0	3.0	3.0
Lane Grp Cap (vph)	577	528	448	360	1013	453	415	1444	646	79	1175	526
v/s Ratio Prot	0.10	c0.25		c0.12	0.06		c0.07	c0.38		0.00	0.27	
v/s Ratio Perm			0.05	0.20		0.01			0.14			0.06
v/c Ratio	0.60	0.89	0.17	0.70	0.20	0.02	0.62	0.93	0.33	0.05	0.81	0.17
Uniform Delay, d1	49.7	44.4	34.9	31.3	34.9	33.1	54.0	36.4	26.2	59.1	39.5	30.6
Progression Factor	1.00	1.00	1.00	1.00	1.00	1.00	1.00	1.00	1.00	1.00	1.00	1.00
Incremental Delay, d2	1.7	17.2	0.2	5.8	0.1	0.0	2.7	10.6	0.3	0.3	4.4	0.2
Delay (s)	51.4	61.6	35.1	37.1	35.0	33.1	56.7	47.0	26.5	59.3	44.0	30.7
Level of Service	D	E	D	D	D	C	E	D	C	E	D	C
Approach Delay (s)		51.7			36.0			44.9			41.1	
Approach LOS		D			D			D			D	

Intersection Summary

HCM Average Control Delay	44.6	HCM Level of Service	D
HCM Volume to Capacity ratio	0.86		
Actuated Cycle Length (s)	129.2	Sum of lost time (s)	12.0
Intersection Capacity Utilization	93.6%	ICU Level of Service	F
Analysis Period (min)	15		

c Critical Lane Group

Movement	EBL	EBR	NBL	NBT	SBT	SBR
Lane Configurations						
Ideal Flow (vphpl)	1900	1900	1900	1900	1900	1900
Total Lost time (s)	3.0	3.0	3.0	3.0	3.0	3.0
Lane Util. Factor	1.00	1.00	1.00	0.95	0.95	1.00
Frt	1.00	0.85	1.00	1.00	1.00	0.85
Flt Protected	0.95	1.00	0.95	1.00	1.00	1.00
Satd. Flow (prot)	1770	1583	1770	3539	3539	1583
Flt Permitted	0.95	1.00	0.09	1.00	1.00	1.00
Satd. Flow (perm)	1770	1583	162	3539	3539	1583
Volume (vph)	211	183	249	1577	1196	116
Peak-hour factor, PHF	0.95	0.95	0.95	0.95	0.95	0.95
Adj. Flow (vph)	222	193	262	1660	1259	122
RTOR Reduction (vph)	0	149	0	0	0	37
Lane Group Flow (vph)	222	44	262	1660	1259	85
Turn Type		Perm	pm+pt			pm+ov
Protected Phases	4		1	6	2	4
Permitted Phases		4	6			2
Actuated Green, G (s)	16.9	16.9	60.9	60.9	39.5	56.4
Effective Green, g (s)	20.9	20.9	64.4	64.4	43.0	63.9
Actuated g/C Ratio	0.23	0.23	0.71	0.71	0.47	0.70
Clearance Time (s)	7.0	7.0	7.0	6.5	6.5	7.0
Vehicle Extension (s)	3.0	3.0	4.0	4.0	4.0	3.0
Lane Grp Cap (vph)	405	362	438	2496	1667	1160
v/s Ratio Prot	c0.13		0.12	c0.47	c0.36	0.02
v/s Ratio Perm		0.03	0.30			0.04
v/c Ratio	0.55	0.12	0.60	0.67	0.76	0.07
Uniform Delay, d1	31.0	27.9	19.8	7.5	19.8	4.3
Progression Factor	1.00	1.00	1.00	1.00	1.00	1.00
Incremental Delay, d2	1.5	0.2	2.6	0.7	2.1	0.0
Delay (s)	32.6	28.1	22.4	8.2	22.0	4.4
Level of Service	C	C	C	A	C	A
Approach Delay (s)	30.5			10.1	20.4	
Approach LOS	C			B	C	

Intersection Summary			
HCM Average Control Delay	16.2	HCM Level of Service	B
HCM Volume to Capacity ratio	0.69		
Actuated Cycle Length (s)	91.3	Sum of lost time (s)	9.0
Intersection Capacity Utilization	68.5%	ICU Level of Service	C
Analysis Period (min)	15		

c Critical Lane Group

Movement	EBL	EBT	EBR	WBL	WBT	WBR	NBL	NBT	NBR	SBL	SBT	SBR
Lane Configurations												
Ideal Flow (vphpl)	1900	1900	1900	1900	1900	1900	1900	1900	1900	1900	1900	1900
Lane Width	12	12	12	12	12	13	12	12	12	12	12	12
Total Lost time (s)	3.0	3.0	3.0	3.0	3.0	3.0	3.0	3.0	3.0	3.0	3.0	3.0
Lane Util. Factor	0.97	0.91	1.00	0.97	0.86	1.00	0.97	0.95	1.00	0.97	0.95	1.00
Frt	1.00	1.00	0.85	1.00	1.00	0.85	1.00	1.00	0.85	1.00	1.00	0.85
Flt Protected	0.95	1.00	1.00	0.95	1.00	1.00	0.95	1.00	1.00	0.95	1.00	1.00
Satd. Flow (prot)	3433	5085	1583	3433	6408	1638	3433	3539	1583	3433	3539	1583
Flt Permitted	0.95	1.00	1.00	0.95	1.00	1.00	0.95	1.00	1.00	0.95	1.00	1.00
Satd. Flow (perm)	3433	5085	1583	3433	6408	1636	3433	3539	1583	3433	3539	1583
Volume (vph)	245	945	194	216	2087	1472	127	549	106	1002	394	231
Peak-hour factor, PHF	0.95	0.95	0.95	0.95	0.95	0.95	0.95	0.95	0.95	0.95	0.95	0.95
Adj. Flow (vph)	258	995	204	227	2197	1549	134	578	112	1055	415	243
RTOR Reduction (vph)	0	0	0	0	0	0	0	0	6	0	0	5
Lane Group Flow (vph)	258	995	204	227	2197	1549	134	578	106	1055	415	238
Turn Type	Prot		Free	Prot		Free	Prot		pm+ov	Prot		pm+ov
Protected Phases	1	6		5	2		3	8	5	7	4	1
Permitted Phases			Free			Free			8			4
Actuated Green, G (s)	5.4	33.3	130.0	10.1	38.0	130.0	5.0	23.1	33.2	36.0	54.1	59.5
Effective Green, g (s)	9.4	37.3	130.0	14.1	42.0	130.0	9.0	26.6	40.7	40.0	57.6	67.0
Actuated g/C Ratio	0.07	0.29	1.00	0.11	0.32	1.00	0.07	0.20	0.31	0.31	0.44	0.52
Clearance Time (s)	7.0	7.0		7.0	7.0		7.0	6.5	7.0	7.0	6.5	7.0
Vehicle Extension (s)	2.0	3.0		2.0	3.0		2.0	2.0	2.0	2.0	2.0	2.0
Lane Grp Cap (vph)	248	1459	1583	372	2070	1636	238	724	532	1056	1568	852
v/s Ratio Prot	0.08	0.20		0.07	c0.34		0.04	0.16	0.02	c0.31	0.12	0.02
v/s Ratio Perm			0.13			c0.95			0.05			0.13
v/c Ratio	1.04	0.68	0.13	0.61	1.06	0.95	0.56	0.80	0.20	1.00	0.26	0.28
Uniform Delay, d1	60.3	41.1	0.0	55.3	44.0	0.0	58.6	49.2	32.7	45.0	22.8	17.8
Progression Factor	1.00	1.00	1.00	1.14	1.09	1.00	1.00	1.00	1.00	1.00	1.00	1.00
Incremental Delay, d2	68.1	2.6	0.2	1.0	33.3	6.9	1.8	5.7	0.1	27.2	0.0	0.1
Delay (s)	128.4	43.7	0.2	63.9	81.3	6.9	60.4	54.9	32.8	72.2	22.9	17.9
Level of Service	F	D	A	E	F	A	E	D	C	E	C	B
Approach Delay (s)		52.6			51.3			52.8			52.5	
Approach LOS		D			D			D			D	

Intersection Summary			
HCM Average Control Delay	52.0	HCM Level of Service	D
HCM Volume to Capacity ratio	0.99		
Actuated Cycle Length (s)	130.0	Sum of lost time (s)	0.0
Intersection Capacity Utilization	94.3%	ICU Level of Service	F
Analysis Period (min)	15		

c Critical Lane Group

HCM Signalized Intersection Capacity Analysis
19: Farmwell Road & Smith Switch Road

Kincora
Total Future 2015

Movement	EBL	EBT	EBR	WBL	WBT	WBR	NBL	NBT	NBR	SBL	SBT	SBR
Lane Configurations												
Ideal Flow (vphpl)	1900	1900	1900	1900	1900	1900	1900	1900	1900	1900	1900	1900
Total Lost time (s)	3.0	3.0	3.0	3.0	3.0	3.0	3.0	3.0	3.0	3.0	3.0	
Lane Util. Factor	1.00	0.91	1.00	1.00	0.91	1.00	1.00	0.95	1.00	1.00	0.95	
Frt	1.00	1.00	0.85	1.00	1.00	0.85	1.00	1.00	0.85	1.00	0.90	
Flt Protected	0.95	1.00	1.00	0.95	1.00	1.00	0.95	1.00	1.00	0.95	1.00	
Satd. Flow (prot)	1770	5085	1583	1770	5085	1583	1770	3539	1583	1770	3170	
Flt Permitted	0.95	1.00	1.00	0.95	1.00	1.00	0.78	1.00	1.00	0.49	1.00	
Satd. Flow (perm)	1770	5085	1583	1770	5085	1583	1461	3539	1583	920	3170	
Volume (vph)	27	1953	92	474	3148	159	145	33	456	290	65	147
Peak-hour factor, PHF	0.95	0.95	0.95	0.95	0.95	0.95	0.95	0.95	0.95	0.95	0.95	0.95
Adj. Flow (vph)	28	2056	97	499	3314	167	153	35	480	305	68	155
RTOR Reduction (vph)	0	0	52	0	0	30	0	0	0	0	50	0
Lane Group Flow (vph)	28	2056	45	499	3314	137	153	35	480	305	173	0
Turn Type	Prot		pm+ov	Prot		pm+ov	pm+pt		Free	pm+pt		
Protected Phases	1	6	3	5	2	7	3	8		7	4	
Permitted Phases			6			2	8		Free	4		
Actuated Green, G (s)	2.4	50.2	53.2	31.0	78.8	99.0	4.6	1.6	130.0	28.8	18.8	
Effective Green, g (s)	6.4	53.7	60.7	35.0	82.3	106.5	12.1	5.1	130.0	32.3	22.3	
Actuated g/C Ratio	0.05	0.41	0.47	0.27	0.63	0.82	0.09	0.04	1.00	0.25	0.17	
Clearance Time (s)	7.0	6.5	7.0	7.0	6.5	7.0	7.0	6.5		7.0	6.5	
Vehicle Extension (s)	2.0	3.0	2.0	2.0	3.0	2.0	2.0	2.0		2.0	2.0	
Lane Grp Cap (vph)	87	2100	776	477	3219	1333	153	139	1583	387	544	
v/s Ratio Prot	0.02	0.40	0.00	c0.28	c0.65	0.02	c0.05	0.01		c0.15	0.05	
v/s Ratio Perm			0.03			0.07	0.04		0.30	c0.05		
v/c Ratio	0.32	0.98	0.06	1.05	1.03	0.10	1.00	0.25	0.30	0.79	0.32	
Uniform Delay, d1	59.7	37.6	19.0	47.5	23.9	2.3	58.7	60.6	0.0	44.4	47.2	
Progression Factor	0.98	1.16	3.08	1.00	1.00	1.00	1.00	1.00	1.00	1.00	1.00	
Incremental Delay, d2	0.4	10.6	0.0	53.8	24.1	0.2	72.8	0.3	0.5	15.0	1.5	
Delay (s)	59.1	54.3	58.5	101.3	47.9	2.5	131.4	60.9	0.5	59.4	48.7	
Level of Service	E	D	E	F	D	A	F	E	A	E	D	
Approach Delay (s)		54.5			52.7			33.7			54.9	
Approach LOS		D			D			C			D	

Intersection Summary			
HCM Average Control Delay	51.7	HCM Level of Service	D
HCM Volume to Capacity ratio	0.97		
Actuated Cycle Length (s)	130.0	Sum of lost time (s)	6.0
Intersection Capacity Utilization	101.9%	ICU Level of Service	G
Analysis Period (min)	15		

c Critical Lane Group

HCM Signalized Intersection Capacity Analysis
21: Waxpool Road & Pacific Blvd

Kincora
Total Future 2015

Movement	EBL	EBT	EBR	WBL	WBT	WBR	NBL	NBT	NBR	SBL	SBT	SBR
Lane Configurations												
Ideal Flow (vphpl)	1900	1900	1900	1900	1900	1900	1900	1900	1900	1900	1900	1900
Total Lost time (s)	3.0	3.0	3.0	3.0	3.0	3.0	3.0	3.0	3.0	3.0	3.0	3.0
Lane Util. Factor	0.94	0.86	1.00	0.97	0.86	1.00	0.97	0.95	1.00	0.97	0.95	1.00
Frt	1.00	1.00	0.85	1.00	1.00	0.85	1.00	1.00	0.85	1.00	1.00	0.85
Flt Protected	0.95	1.00	1.00	0.95	1.00	1.00	0.95	1.00	1.00	0.95	1.00	1.00
Satd. Flow (prot)	4990	6408	1583	3433	6408	1583	3433	3539	1583	3433	3539	1583
Flt Permitted	0.95	1.00	1.00	0.95	1.00	1.00	0.95	1.00	1.00	0.95	1.00	1.00
Satd. Flow (perm)	4990	6408	1583	3433	6408	1583	3433	3539	1583	3433	3539	1583
Volume (vph)	859	2481	243	88	4153	346	400	109	675	380	119	1171
Peak-hour factor, PHF	0.95	0.95	0.95	0.95	0.95	0.95	0.95	0.95	0.95	0.95	0.95	0.95
Adj. Flow (vph)	904	2612	256	93	4372	364	421	115	711	400	125	1233
RTOR Reduction (vph)	0	0	0	0	0	0	0	0	0	0	0	0
Lane Group Flow (vph)	904	2612	256	93	4372	364	421	115	711	400	125	1233
Turn Type	Prot		Free	Prot		Free	Prot		Free	Prot		Free
Protected Phases	1	6		5	2		7	4		3	8	
Permitted Phases			Free			Free			Free			Free
Actuated Green, G (s)	17.0	91.6	145.0	8.4	83.0	145.0	13.0	5.0	145.0	12.0	4.0	145.0
Effective Green, g (s)	21.0	95.6	145.0	12.4	87.0	145.0	17.0	9.0	145.0	16.0	8.0	145.0
Actuated g/C Ratio	0.14	0.66	1.00	0.09	0.60	1.00	0.12	0.06	1.00	0.11	0.06	1.00
Clearance Time (s)	7.0	7.0		7.0	7.0		7.0	7.0		7.0	7.0	
Vehicle Extension (s)	2.0	3.0		2.0	3.0		3.0	3.0		3.0	3.0	
Lane Grp Cap (vph)	723	4225	1583	294	3845	1583	402	220	1583	379	195	1583
v/s Ratio Prot	c0.18	0.41		0.03	c0.68		c0.12	0.03		0.12	0.04	
v/s Ratio Perm			0.16			0.23			0.45			c0.78
v/c Ratio	1.25	0.62	0.16	0.32	1.14	0.23	1.05	0.52	0.45	1.06	0.64	0.78
Uniform Delay, d1	62.0	14.2	0.0	62.3	29.0	0.0	64.0	65.9	0.0	64.5	67.1	0.0
Progression Factor	1.00	1.00	1.00	1.00	1.00	1.00	1.00	1.00	1.00	1.00	1.00	1.00
Incremental Delay, d2	124.0	0.7	0.2	0.2	65.3	0.3	57.8	2.2	0.9	61.6	7.0	3.9
Delay (s)	186.0	14.9	0.2	62.5	94.3	0.3	121.8	68.2	0.9	126.1	74.1	3.9
Level of Service	F	B	A	E	F	A	F	E	A	F	E	A
Approach Delay (s)		54.9			86.6			47.9			36.7	
Approach LOS		D			F			D			D	

Intersection Summary			
HCM Average Control Delay	64.6	HCM Level of Service	E
HCM Volume to Capacity ratio	1.12		
Actuated Cycle Length (s)	145.0	Sum of lost time (s)	9.0
Intersection Capacity Utilization	104.6%	ICU Level of Service	G
Analysis Period (min)	15		

c Critical Lane Group

Movement	EBL	EBT	EBR	WBL	WBT	WBR	NBL	NBT	NBR	SBL	SBT	SBR
Lane Configurations												
Ideal Flow (vphpl)	1900	1900	1900	1900	1900	1900	1900	1900	1900	1900	1900	1900
Total Lost time (s)		3.0		3.0	3.0			3.0	3.0		3.0	
Lane Util. Factor		0.95		1.00	0.95			1.00	1.00		1.00	
Frt		0.99		1.00	1.00			1.00	0.85		0.94	
Flt Protected		1.00		0.95	1.00			0.95	1.00		0.98	
Satd. Flow (prot)		3501		1770	3539			1775	1583		1724	
Flt Permitted		0.92		0.06	1.00			0.72	1.00		0.89	
Satd. Flow (perm)		3236		105	3539			1334	1583		1561	
Volume (vph)	25	1719	125	165	1073	0	180	2	262	7	3	7
Peak-hour factor, PHF	0.95	0.95	0.95	0.95	0.95	0.95	0.95	0.95	0.95	0.95	0.95	0.95
Adj. Flow (vph)	26	1809	132	174	1129	0	189	2	276	7	3	7
RTOR Reduction (vph)	0	5	0	0	0	0	0	0	0	0	6	0
Lane Group Flow (vph)	0	1962	0	174	1129	0	0	191	276	0	11	0
Turn Type	Perm			pm+pt			Perm		pm+ov	Perm		
Protected Phases		6		5	2			4	5		8	
Permitted Phases	6			2			4		4	8		
Actuated Green, G (s)		65.1		76.1	76.1			18.5	24.0		18.5	
Effective Green, g (s)		68.1		79.1	79.1			21.5	29.5		21.5	
Actuated g/C Ratio		0.64		0.74	0.74			0.20	0.28		0.20	
Clearance Time (s)		6.0		5.5	6.0			6.0	5.5		6.0	
Vehicle Extension (s)		4.0		2.0	4.0			3.0	2.0		3.0	
Lane Grp Cap (vph)		2067		203	2626			269	483		315	
v/s Ratio Prot				c0.06	0.32				0.04			
v/s Ratio Perm		c0.61		0.57				c0.14	0.13		0.01	
v/c Ratio		0.95		0.86	0.43			0.71	0.57		0.04	
Uniform Delay, d1		17.7		32.3	5.2			39.6	33.1		34.2	
Progression Factor		1.00		1.00	1.00			1.00	1.00		1.00	
Incremental Delay, d2		10.3		27.3	0.2			8.5	1.0		0.0	
Delay (s)		28.0		59.6	5.4			48.2	34.1		34.3	
Level of Service		C		E	A			D	C		C	
Approach Delay (s)		28.0			12.6			39.9			34.3	
Approach LOS		C			B			D			C	

Intersection Summary			
HCM Average Control Delay	24.1	HCM Level of Service	C
HCM Volume to Capacity ratio	0.89		
Actuated Cycle Length (s)	106.6	Sum of lost time (s)	9.0
Intersection Capacity Utilization	108.6%	ICU Level of Service	G
Analysis Period (min)	15		
c Critical Lane Group			

Movement	EBL	EBT	WBT	WBR	SBL	SBR
Lane Configurations						
Ideal Flow (vphpl)	1900	1900	1900	1900	1900	1900
Total Lost time (s)	3.0	3.0	3.0	3.0	3.0	3.0
Lane Util. Factor	0.97	0.95	0.91	0.91	0.97	1.00
Frt	1.00	1.00	0.98	0.85	1.00	0.85
Flt Protected	0.95	1.00	1.00	1.00	0.95	1.00
Satd. Flow (prot)	3433	3539	3307	1441	3433	1583
Flt Permitted	0.95	1.00	1.00	1.00	0.95	1.00
Satd. Flow (perm)	3433	3539	3307	1441	3433	1583
Volume (vph)	1132	623	562	782	649	747
Peak-hour factor, PHF	0.95	0.95	0.95	0.95	0.95	0.95
Adj. Flow (vph)	1192	656	592	823	683	786
RTOR Reduction (vph)	0	0	15	6	0	488
Lane Group Flow (vph)	1192	656	693	701	683	298
Turn Type	Prot			pm+ov		Perm
Protected Phases	5	2	6	4	4	
Permitted Phases				6		4
Actuated Green, G (s)	32.8	59.8	20.0	45.0	25.0	25.0
Effective Green, g (s)	36.8	63.8	24.0	53.5	29.5	29.5
Actuated g/C Ratio	0.37	0.64	0.24	0.54	0.30	0.30
Clearance Time (s)	7.0	7.0	7.0	7.5	7.5	7.5
Vehicle Extension (s)	2.0	3.0	3.0	3.0	3.0	3.0
Lane Grp Cap (vph)	1272	2274	799	820	1020	470
v/s Ratio Prot	c0.35	0.19	0.21	c0.25	0.20	
v/s Ratio Perm				0.23		0.19
v/c Ratio	0.94	0.29	0.87	0.85	0.67	0.63
Uniform Delay, d1	30.1	7.8	36.1	19.6	30.6	30.2
Progression Factor	1.00	1.00	1.00	1.00	1.00	1.00
Incremental Delay, d2	12.7	0.1	9.8	8.7	1.7	2.8
Delay (s)	42.8	7.9	45.9	28.3	32.3	33.0
Level of Service	D	A	D	C	C	C
Approach Delay (s)		30.4	37.1		32.7	
Approach LOS		C	D		C	

Intersection Summary			
HCM Average Control Delay	33.1	HCM Level of Service	C
HCM Volume to Capacity ratio	0.89		
Actuated Cycle Length (s)	99.3	Sum of lost time (s)	6.0
Intersection Capacity Utilization	84.7%	ICU Level of Service	E
Analysis Period (min)	15		
c Critical Lane Group			

HCM Signalized Intersection Capacity Analysis — Kincora
24: Pacific Blvd & Loudoun County Parkway — Total Future 2015

Movement	EBL	EBT	EBR	WBL	WBT	WBR	NBL	NBT	NBR	SBL	SBT	SBR
Lane Configurations												
Ideal Flow (vphpl)	1900	1900	1900	1900	1900	1900	1900	1900	1900	1900	1900	1900
Total Lost time (s)	4.0		4.0	4.0		4.0	4.0	4.0	4.0	4.0	4.0	4.0
Lane Util. Factor	0.97		1.00	1.00		1.00	1.00	0.95	1.00	1.00	0.95	1.00
Frt	1.00		0.85	1.00		0.85	1.00	1.00	0.85	1.00	1.00	0.85
Flt Protected	0.95		1.00	0.95		1.00	0.95	1.00	1.00	0.95	1.00	1.00
Satd. Flow (prot)	3433		1583	1770		1583	1770	3539	1583	1770	3539	1583
Flt Permitted	0.95		1.00	0.95		1.00	0.08	1.00	1.00	0.05	1.00	1.00
Satd. Flow (perm)	3433		1583	1770		1583	144	3539	1583	99	3539	1583
Volume (vph)	495	0	387	56	0	683	230	1634	12	345	1464	236
Peak-hour factor, PHF	0.95	0.95	0.95	0.95	0.95	0.95	0.95	0.95	0.95	0.95	0.95	0.95
Adj. Flow (vph)	521	0	407	59	0	719	242	1720	13	363	1541	248
RTOR Reduction (vph)	0	0	0	0	0	0	0	0	4	0	0	57
Lane Group Flow (vph)	521	0	407	59	0	719	242	1720	9	363	1541	191
Turn Type	Prot		Free	Prot		Free	pm+pt		pm+ov	pm+pt		pm+ov
Protected Phases	7	4		3	8		5	2	3	1	6	7
Permitted Phases			Free			Free	2		2	6		6
Actuated Green, G (s)	27.6		139.0	16.7		139.0	84.8	68.0	84.7	99.4	75.6	103.2
Effective Green, g (s)	28.6		139.0	17.7		139.0	90.8	71.0	88.7	102.4	78.6	107.2
Actuated g/C Ratio	0.21		1.00	0.13		1.00	0.65	0.51	0.64	0.74	0.57	0.77
Clearance Time (s)	5.0			5.0			7.0	7.0	5.0	7.0	7.0	5.0
Vehicle Extension (s)	2.0			2.0			2.0	3.0	2.0	2.0	3.0	2.0
Lane Grp Cap (vph)	706		1583	225		1583	326	1808	1056	402	2001	1266
v/s Ratio Prot	c0.15			0.03			0.11	c0.49	0.00	c0.18	0.44	0.03
v/s Ratio Perm			0.26			0.45	0.38		0.00	0.49		0.09
v/c Ratio	0.74		0.26	0.26		0.45	0.74	0.95	0.01	0.90	0.77	0.15
Uniform Delay, d1	51.7		0.0	54.8		0.0	34.8	32.4	9.2	46.6	23.2	4.1
Progression Factor	1.00		1.00	1.00		1.00	1.00	1.00	1.00	1.00	1.00	1.00
Incremental Delay, d2	3.5		0.4	0.2		0.9	7.8	11.7	0.0	22.5	1.9	0.0
Delay (s)	55.2		0.4	55.0		0.9	42.5	44.0	9.2	69.2	25.1	4.1
Level of Service	E		A	D		A	D	D	A	E	C	A
Approach Delay (s)		31.2			5.0			43.6			30.1	
Approach LOS		C			A			D			C	

Intersection Summary

HCM Average Control Delay	31.5	HCM Level of Service	C
HCM Volume to Capacity ratio	0.89		
Actuated Cycle Length (s)	139.0	Sum of lost time (s)	12.0
Intersection Capacity Utilization	95.1%	ICU Level of Service	F
Analysis Period (min)	15		

c Critical Lane Group

HCM Unsignalized Intersection Capacity Analysis — Kincora
25: Russel Branch Pkwy & Richfield Way — Total Future 2015

Movement	EBL	EBT	EBR	WBL	WBT	WBR	NBL	NBT	NBR	SBL	SBT	SBR
Lane Configurations												
Sign Control		Free			Free			Stop			Stop	
Grade		0%			0%			0%			0%	
Volume (veh/h)	0	310	5	0	515	0	5	0	0	0	0	0
Peak Hour Factor	0.92	0.92	0.92	0.92	0.92	0.92	0.92	0.92	0.92	0.92	0.92	0.92
Hourly flow rate (vph)	0	337	5	0	560	0	5	0	0	0	0	0
Pedestrians												
Lane Width (ft)												
Walking Speed (ft/s)												
Percent Blockage												
Right turn flare (veh)												
Median type								None			None	
Median storage veh)												
Upstream signal (ft)												
pX, platoon unblocked												
vC, conflicting volume	560			342			617	897	168	728	902	280
vC1, stage 1 conf vol												
vC2, stage 2 conf vol												
vCu, unblocked vol	560			342			617	897	168	728	902	280
tC, single (s)	4.1			4.1			7.5	6.5	6.9	7.5	6.5	6.9
tC, 2 stage (s)												
tF (s)	2.2			2.2			3.5	4.0	3.3	3.5	4.0	3.3
p0 queue free %	100			100			99	100	100	100	100	100
cM capacity (veh/h)	1007			1213			374	278	846	311	276	717

Direction, Lane #	EB 1	EB 2	EB 3	EB 4	WB 1	WB 2	WB 3	WB 4	NB 1	NB 2	SB 1	SB 2
Volume Total	0	168	168	5	0	280	280	0	5	0	0	0
Volume Left	0	0	0	0	0	0	0	0	5	0	0	0
Volume Right	0	0	0	5	0	0	0	0	0	0	0	0
cSH	1700	1700	1700	1700	1700	1700	1700	1700	374	1700	1700	1700
Volume to Capacity	0.00	0.10	0.10	0.00	0.00	0.16	0.16	0.00	0.01	0.00	0.00	0.00
Queue Length 95th (ft)	0	0	0	0	0	0	0	0	1	0	0	0
Control Delay (s)	0.0	0.0	0.0	0.0	0.0	0.0	0.0	0.0	14.8	0.0	0.0	0.0
Lane LOS									B	A	A	A
Approach Delay (s)	0.0				0.0				14.8		0.0	
Approach LOS									B		A	

Intersection Summary

Average Delay	0.1		
Intersection Capacity Utilization	24.2%	ICU Level of Service	A
Analysis Period (min)	15		

Movement	WBL	WBR	NBT	NBR	SBL	SBT
Lane Configurations						
Ideal Flow (vphpl)	1900	1900	1900	1900	1900	1900
Total Lost time (s)	4.0	4.0	4.0	4.0	4.0	4.0
Lane Util. Factor	0.97	1.00	0.95	1.00	1.00	0.95
Frt	1.00	0.85	1.00	0.85	1.00	1.00
Flt Protected	0.95	1.00	1.00	1.00	0.95	1.00
Satd. Flow (prot)	3433	1583	3539	1583	1770	3539
Flt Permitted	0.95	1.00	1.00	1.00	0.95	1.00
Satd. Flow (perm)	3433	1583	3539	1583	1770	3539
Volume (vph)	97	488	660	240	637	997
Peak-hour factor, PHF	0.95	0.95	0.95	0.95	0.95	0.95
Adj. Flow (vph)	102	514	695	253	671	1049
RTOR Reduction (vph)	0	430	0	185	0	0
Lane Group Flow (vph)	102	84	695	68	671	1049
Turn Type		Perm		Perm	Prot	
Protected Phases	8		2		1	6
Permitted Phases		8		2		
Actuated Green, G (s)	12.6	12.6	22.7	22.7	38.7	63.4
Effective Green, g (s)	15.6	15.6	25.7	25.7	41.7	71.4
Actuated g/C Ratio	0.16	0.16	0.27	0.27	0.44	0.75
Clearance Time (s)	7.0	7.0	7.0	7.0	7.0	7.0
Vehicle Extension (s)	2.0	2.0	2.0	2.0	2.0	2.0
Lane Grp Cap (vph)	564	260	957	428	777	2660
v/s Ratio Prot	0.03		c0.20		c0.38	0.30
v/s Ratio Perm		c0.05		0.04		
v/c Ratio	0.18	0.32	0.73	0.16	0.86	0.39
Uniform Delay, d1	34.2	35.0	31.5	26.4	24.1	4.2
Progression Factor	1.00	1.00	1.00	1.00	1.00	1.00
Incremental Delay, d2	0.1	0.3	2.4	0.1	9.5	0.0
Delay (s)	34.3	35.3	33.8	26.5	33.6	4.2
Level of Service	C	D	C	C	C	A
Approach Delay (s)	35.1		31.9			15.7
Approach LOS	D		C			B

Intersection Summary			
HCM Average Control Delay	24.0	HCM Level of Service	C
HCM Volume to Capacity ratio	0.72		
Actuated Cycle Length (s)	95.0	Sum of lost time (s)	12.0
Intersection Capacity Utilization	71.9%	ICU Level of Service	C
Analysis Period (min)	15		

c Critical Lane Group

Movement	WBL	WBR	NBT	NBR	SBL	SBT
Lane Configurations						
Sign Control	Stop		Free			Free
Grade	0%		0%			0%
Volume (veh/h)	0	159	740	114	0	1109
Peak Hour Factor	0.95	0.95	0.95	0.95	0.95	0.95
Hourly flow rate (vph)	0	167	779	120	0	1167
Pedestrians						
Lane Width (ft)						
Walking Speed (ft/s)						
Percent Blockage						
Right turn flare (veh)						
Median type	None					
Median storage veh)						
Upstream signal (ft)			535			850
pX, platoon unblocked	0.95	0.92			0.92	
vC, conflicting volume	1423	449			899	
vC1, stage 1 conf vol						
vC2, stage 2 conf vol						
vCu, unblocked vol	1155	321			808	
tC, single (s)	6.8	6.9			4.1	
tC, 2 stage (s)						
tF (s)	3.5	3.3			2.2	
p0 queue free %	100	73			100	
cM capacity (veh/h)	182	623			751	

Direction, Lane #	WB 1	NB 1	NB 2	SB 1	SB 2
Volume Total	167	519	380	584	584
Volume Left	0	0	0	0	0
Volume Right	167	0	120	0	0
cSH	623	1700	1700	1700	1700
Volume to Capacity	0.27	0.31	0.22	0.34	0.34
Queue Length 95th (ft)	27	0	0	0	0
Control Delay (s)	12.9	0.0	0.0	0.0	0.0
Lane LOS	B				
Approach Delay (s)	12.9	0.0		0.0	
Approach LOS	B				

Intersection Summary			
Average Delay	1.0		
Intersection Capacity Utilization	40.6%	ICU Level of Service	A
Analysis Period (min)	15		

Movement	WBL	WBR	NBT	NBR	SBL	SBT
Lane Configurations						
Ideal Flow (vphpl)	1900	1900	1900	1900	1900	1900
Total Lost time (s)	4.0		4.0			4.0
Lane Util. Factor	1.00		0.95			0.95
Frt	0.95		0.99			1.00
Flt Protected	0.97		1.00			1.00
Satd. Flow (prot)	1711		3516			3530
Flt Permitted	0.97		1.00			0.87
Satd. Flow (perm)	1711		3516			3062
Volume (vph)	75	50	804	37	55	1054
Peak-hour factor, PHF	0.95	0.95	0.95	0.95	0.95	0.95
Adj. Flow (vph)	79	53	846	39	58	1109
RTOR Reduction (vph)	17	0	5	0	0	0
Lane Group Flow (vph)	115	0	880	0	0	1167
Turn Type					Perm	
Protected Phases	8		2			6
Permitted Phases					6	
Actuated Green, G (s)	9.9		40.7			40.7
Effective Green, g (s)	12.9		43.7			43.7
Actuated g/C Ratio	0.20		0.68			0.68
Clearance Time (s)	7.0		7.0			7.0
Vehicle Extension (s)	2.0		2.0			2.0
Lane Grp Cap (vph)	342		2378			2071
v/s Ratio Prot	c0.07		0.25			
v/s Ratio Perm						c0.38
v/c Ratio	0.34		0.37			0.56
Uniform Delay, d1	22.2		4.5			5.5
Progression Factor	1.00		1.00			1.00
Incremental Delay, d2	0.2		0.0			0.2
Delay (s)	22.4		4.5			5.7
Level of Service	C		A			A
Approach Delay (s)	22.4		4.5			5.7
Approach LOS	C		A			A

Intersection Summary			
HCM Average Control Delay	6.2	HCM Level of Service	A
HCM Volume to Capacity ratio	0.51		
Actuated Cycle Length (s)	64.6	Sum of lost time (s)	8.0
Intersection Capacity Utilization	72.5%	ICU Level of Service	C
Analysis Period (min)	15		

c Critical Lane Group

Movement	WBL	WBR	NBT	NBR	SBL	SBT
Lane Configurations						
Sign Control	Stop		Free			Free
Grade	0%		0%			0%
Volume (veh/h)	0	8	1102	46	0	1634
Peak Hour Factor	0.95	0.95	0.95	0.95	0.95	0.95
Hourly flow rate (vph)	0	8	1160	48	0	1720
Pedestrians						
Lane Width (ft)						
Walking Speed (ft/s)						
Percent Blockage						
Right turn flare (veh)						
Median type	None					
Median storage veh)						
Upstream signal (ft)			844			
pX, platoon unblocked	0.83	0.83			0.83	
vC, conflicting volume	2044	604			1208	
vC1, stage 1 conf vol						
vC2, stage 2 conf vol						
vCu, unblocked vol	2053	326			1051	
tC, single (s)	6.8	6.9			4.1	
tC, 2 stage (s)						
tF (s)	3.5	3.3			2.2	
p0 queue free %	100	98			100	
cM capacity (veh/h)	40	558			549	

Direction, Lane #	WB 1	NB 1	NB 2	SB 1	SB 2
Volume Total	8	773	435	860	860
Volume Left	0	0	0	0	0
Volume Right	8	0	48	0	0
cSH	558	1700	1700	1700	1700
Volume to Capacity	0.02	0.45	0.26	0.51	0.51
Queue Length 95th (ft)	1	0	0	0	0
Control Delay (s)	11.5	0.0	0.0	0.0	0.0
Lane LOS	B				
Approach Delay (s)	11.5	0.0		0.0	
Approach LOS	B				

Intersection Summary			
Average Delay	0.0		
Intersection Capacity Utilization	48.5%	ICU Level of Service	A
Analysis Period (min)	15		

Movement	WBL	WBR	NBT	NBR	SBL	SBT
Lane Configurations						
Sign Control	Stop		Free			Free
Grade	0%		0%			0%
Volume (veh/h)	0	8	1064	46	0	1634
Peak Hour Factor	0.95	0.95	0.95	0.95	0.95	0.95
Hourly flow rate (vph)	0	8	1120	48	0	1720
Pedestrians						
Lane Width (ft)						
Walking Speed (ft/s)						
Percent Blockage						
Right turn flare (veh)						
Median type	None					
Median storage veh)						
Upstream signal (ft)						
pX, platoon unblocked						
vC, conflicting volume	2004	584			1168	
vC1, stage 1 conf vol						
vC2, stage 2 conf vol						
vCu, unblocked vol	2004	584			1168	
tC, single (s)	6.8	6.9			4.1	
tC, 2 stage (s)						
tF (s)	3.5	3.3			2.2	
p0 queue free %	100	98			100	
cM capacity (veh/h)	52	455			594	

Direction, Lane #	WB 1	NB 1	NB 2	SB 1	SB 2
Volume Total	8	747	422	860	860
Volume Left	0	0	0	0	0
Volume Right	8	0	48	0	0
cSH	455	1700	1700	1700	1700
Volume to Capacity	0.02	0.44	0.25	0.51	0.51
Queue Length 95th (ft)	1	0	0	0	0
Control Delay (s)	13.1	0.0	0.0	0.0	0.0
Lane LOS	B				
Approach Delay (s)	13.1	0.0		0.0	
Approach LOS	B				

Intersection Summary			
Average Delay	0.0		
Intersection Capacity Utilization	48.5%	ICU Level of Service	A
Analysis Period (min)	15		

Movement	EBL	EBT	EBR	WBL	WBT	WBR	NBL	NBT	NBR	SBL	SBT	SBR
Lane Configurations												
Sign Control		Stop			Stop			Free			Free	
Grade		0%			0%			0%			0%	
Volume (veh/h)	0	0	184	0	0	8	0	1055	18	0	1450	50
Peak Hour Factor	0.95	0.95	0.95	0.95	0.95	0.95	0.95	0.95	0.95	0.95	0.95	0.95
Hourly flow rate (vph)	0	0	194	0	0	8	0	1111	19	0	1526	53
Pedestrians												
Lane Width (ft)												
Walking Speed (ft/s)												
Percent Blockage												
Right turn flare (veh)												
Median type		None			None							
Median storage veh)												
Upstream signal (ft)												
pX, platoon unblocked												
vC, conflicting volume	2116	2682	789	1883	2699	565	1579			1129		
vC1, stage 1 conf vol												
vC2, stage 2 conf vol												
vCu, unblocked vol	2116	2682	789	1883	2699	565	1579			1129		
tC, single (s)	7.5	6.5	6.9	7.5	6.5	6.9	4.1			4.1		
tC, 2 stage (s)												
tF (s)	3.5	4.0	3.3	3.5	4.0	3.3	2.2			2.2		
p0 queue free %	100	100	42	100	100	98	100			100		
cM capacity (veh/h)	28	22	333	18	21	468	413			614		

Direction, Lane #	EB 1	WB 1	NB 1	NB 2	SB 1	SB 2
Volume Total	194	8	740	389	1018	561
Volume Left	0	0	0	0	0	0
Volume Right	194	8	0	19	0	53
cSH	333	468	1700	1700	1700	1700
Volume to Capacity	0.58	0.02	0.44	0.23	0.60	0.33
Queue Length 95th (ft)	87	1	0	0	0	0
Control Delay (s)	29.8	12.8	0.0	0.0	0.0	0.0
Lane LOS	D	B				
Approach Delay (s)	29.8	12.8	0.0		0.0	
Approach LOS	D	B				

Intersection Summary			
Average Delay	2.0		
Intersection Capacity Utilization	59.7%	ICU Level of Service	B
Analysis Period (min)	15		

Movement	EBL	EBR	NBL	NBT	SBT	SBR
Lane Configurations						
Sign Control	Stop			Free	Free	
Grade	0%			0%	0%	
Volume (veh/h)	0	193	0	1063	1307	68
Peak Hour Factor	0.95	0.95	0.95	0.95	0.95	0.95
Hourly flow rate (vph)	0	203	0	1119	1376	72
Pedestrians						
Lane Width (ft)						
Walking Speed (ft/s)						
Percent Blockage						
Right turn flare (veh)						
Median type	None					
Median storage veh)						
Upstream signal (ft)					936	
pX, platoon unblocked	0.83	0.83	0.83			
vC, conflicting volume	1971	724	1447			
vC1, stage 1 conf vol						
vC2, stage 2 conf vol						
vCu, unblocked vol	1965	469	1337			
tC, single (s)	6.8	6.9	4.1			
tC, 2 stage (s)						
tF (s)	3.5	3.3	2.2			
p0 queue free %	100	55	100			
cM capacity (veh/h)	46	451	426			

Direction, Lane #	EB 1	NB 1	NB 2	SB 1	SB 2
Volume Total	203	559	559	917	530
Volume Left	0	0	0	0	0
Volume Right	203	0	0	0	72
cSH	451	1700	1700	1700	1700
Volume to Capacity	0.45	0.33	0.33	0.54	0.31
Queue Length 95th (ft)	57	0	0	0	0
Control Delay (s)	19.4	0.0	0.0	0.0	0.0
Lane LOS	C				
Approach Delay (s)	19.4	0.0		0.0	
Approach LOS	C				

Intersection Summary				
Average Delay	1.4			
Intersection Capacity Utilization	56.9%	ICU Level of Service		B
Analysis Period (min)	15			

Movement	EBL	EBR	NBL	NBT	SBT	SBR
Lane Configurations						
Ideal Flow (vphpl)	1900	1900	1900	1900	1900	1900
Total Lost time (s)	4.0			4.0	4.0	
Lane Util. Factor	1.00			0.95	0.95	
Frt	0.90			1.00	0.99	
Flt Protected	0.99			0.99	1.00	
Satd. Flow (prot)	1654			3506	3521	
Flt Permitted	0.99			0.54	1.00	
Satd. Flow (perm)	1654			1907	3521	
Volume (vph)	104	302	204	859	1073	37
Peak-hour factor, PHF	0.95	0.95	0.95	0.95	0.95	0.95
Adj. Flow (vph)	109	318	215	904	1129	39
RTOR Reduction (vph)	80	0	0	0	2	0
Lane Group Flow (vph)	347	0	0	1119	1166	0
Turn Type			Perm			
Protected Phases	4			2	6	
Permitted Phases			2			
Actuated Green, G (s)	23.5			60.9	60.9	
Effective Green, g (s)	26.5			63.9	63.9	
Actuated g/C Ratio	0.27			0.65	0.65	
Clearance Time (s)	7.0			7.0	7.0	
Vehicle Extension (s)	2.0			2.0	2.0	
Lane Grp Cap (vph)	445			1238	2287	
v/s Ratio Prot	c0.21				0.33	
v/s Ratio Perm				c0.59		
v/c Ratio	0.78			0.90	0.51	
Uniform Delay, d1	33.3			14.6	9.0	
Progression Factor	1.00			1.00	1.00	
Incremental Delay, d2	8.0			9.2	0.1	
Delay (s)	41.2			23.9	9.1	
Level of Service	D			C	A	
Approach Delay (s)	41.2			23.9	9.1	
Approach LOS	D			C	A	

Intersection Summary			
HCM Average Control Delay	20.3	HCM Level of Service	C
HCM Volume to Capacity ratio	0.87		
Actuated Cycle Length (s)	98.4	Sum of lost time (s)	8.0
Intersection Capacity Utilization	94.9%	ICU Level of Service	F
Analysis Period (min)	15		
c Critical Lane Group			

Movement	EBL	EBR	NBL	NBT	SBT	SBR
Lane Configurations						
Ideal Flow (vphpl)	1900	1900	1900	1900	1900	1900
Total Lost time (s)	4.0			4.0	4.0	
Lane Util. Factor	1.00			0.95	0.95	
Frt	0.90			1.00	0.99	
Flt Protected	0.99			0.99	1.00	
Satd. Flow (prot)	1659			3491	3505	
Flt Permitted	0.99			0.56	1.00	
Satd. Flow (perm)	1659			1981	3505	
Volume (vph)	128	321	265	697	789	54
Peak-hour factor, PHF	0.95	0.95	0.95	0.95	0.95	0.95
Adj. Flow (vph)	135	338	279	734	831	57
RTOR Reduction (vph)	61	0	0	0	5	0
Lane Group Flow (vph)	412	0	0	1013	883	0
Turn Type			Perm			
Protected Phases	4			2	6	
Permitted Phases			2			
Actuated Green, G (s)	28.3			50.7	50.7	
Effective Green, g (s)	31.3			53.7	53.7	
Actuated g/C Ratio	0.34			0.58	0.58	
Clearance Time (s)	7.0			7.0	7.0	
Vehicle Extension (s)	2.0			2.0	2.0	
Lane Grp Cap (vph)	558			1144	2024	
v/s Ratio Prot	c0.25				0.25	
v/s Ratio Perm				c0.51		
v/c Ratio	0.74			0.91dl	0.44	
Uniform Delay, d1	27.2			17.0	11.1	
Progression Factor	1.00			1.00	1.00	
Incremental Delay, d2	4.4			8.2	0.1	
Delay (s)	31.6			25.2	11.2	
Level of Service	C			C	B	
Approach Delay (s)	31.6			25.2	11.2	
Approach LOS	C			C	B	

Intersection Summary			
HCM Average Control Delay	21.2	HCM Level of Service	C
HCM Volume to Capacity ratio	0.83		
Actuated Cycle Length (s)	93.0	Sum of lost time (s)	8.0
Intersection Capacity Utilization	87.3%	ICU Level of Service	E
Analysis Period (min)	15		

dl Defacto Left Lane. Recode with 1 though lane as a left lane.
c Critical Lane Group

Movement	EBL	EBR	NBL	NBT	SBT	SBR
Lane Configurations						
Ideal Flow (vphpl)	1900	1900	1900	1900	1900	1900
Total Lost time (s)	4.0			4.0	4.0	
Lane Util. Factor	1.00			0.95	0.95	
Frt	0.90			1.00	0.99	
Flt Protected	0.99			0.98	1.00	
Satd. Flow (prot)	1654			3483	3497	
Flt Permitted	0.99			0.63	1.00	
Satd. Flow (perm)	1654			2222	3497	
Volume (vph)	108	321	265	560	522	45
Peak-hour factor, PHF	0.95	0.95	0.95	0.95	0.95	0.95
Adj. Flow (vph)	114	338	279	589	549	47
RTOR Reduction (vph)	63	0	0	0	10	0
Lane Group Flow (vph)	389	0	0	868	586	0
Turn Type			Perm			
Protected Phases	4			2	6	
Permitted Phases			2			
Actuated Green, G (s)	23.5			30.4	30.4	
Effective Green, g (s)	26.5			33.4	33.4	
Actuated g/C Ratio	0.39			0.49	0.49	
Clearance Time (s)	7.0			7.0	7.0	
Vehicle Extension (s)	2.0			2.0	2.0	
Lane Grp Cap (vph)	646			1093	1720	
v/s Ratio Prot	c0.24				0.17	
v/s Ratio Perm				c0.39		
v/c Ratio	0.60			0.79	0.34	
Uniform Delay, d1	16.5			14.4	10.5	
Progression Factor	1.00			1.00	1.00	
Incremental Delay, d2	1.1			3.8	0.0	
Delay (s)	17.6			18.2	10.6	
Level of Service	B			B	B	
Approach Delay (s)	17.6			18.2	10.6	
Approach LOS	B			B	B	

Intersection Summary			
HCM Average Control Delay	15.7	HCM Level of Service	B
HCM Volume to Capacity ratio	0.71		
Actuated Cycle Length (s)	67.9	Sum of lost time (s)	8.0
Intersection Capacity Utilization	74.8%	ICU Level of Service	D
Analysis Period (min)	15		

c Critical Lane Group

Movement	EBL	EBT	WBT	WBR	SWL	SWR
Lane Configurations		↑↑	↑↑			↱↑
Sign Control		Free	Free		Stop	
Grade		0%	0%		0%	
Volume (veh/h)	0	869	224	0	0	376
Peak Hour Factor	0.95	0.95	0.95	0.95	0.95	0.95
Hourly flow rate (vph)	0	915	236	0	0	396
Pedestrians						
Lane Width (ft)						
Walking Speed (ft/s)						
Percent Blockage						
Right turn flare (veh)						
Median type					None	
Median storage veh)						
Upstream signal (ft)		411				
pX, platoon unblocked						
vC, conflicting volume	236				693	118
vC1, stage 1 conf vol						
vC2, stage 2 conf vol						
vCu, unblocked vol	236				693	118
tC, single (s)	4.1				6.8	6.9
tC, 2 stage (s)						
tF (s)	2.2				3.5	3.3
p0 queue free %	100				100	57
cM capacity (veh/h)	1329				377	912

Direction, Lane #	EB 1	EB 2	WB 1	WB 2	SW 1	SW 2
Volume Total	457	457	118	118	198	198
Volume Left	0	0	0	0	0	0
Volume Right	0	0	0	0	198	198
cSH	1700	1700	1700	1700	912	912
Volume to Capacity	0.27	0.27	0.07	0.07	0.22	0.22
Queue Length 95th (ft)	0	0	0	0	21	21
Control Delay (s)	0.0	0.0	0.0	0.0	10.0	10.0
Lane LOS					B	B
Approach Delay (s)	0.0		0.0		10.0	
Approach LOS					B	

Intersection Summary			
Average Delay	2.6		
Intersection Capacity Utilization	27.4%	ICU Level of Service	A
Analysis Period (min)	15		

Movement	EBL	EBR	NBL	NBT	SBT	SBR
Lane Configurations	↰↰↑			↑↑	↑↑	
Sign Control	Stop			Free	Free	
Grade	0%			0%	0%	
Volume (veh/h)	108	313	222	445	254	56
Peak Hour Factor	0.95	0.95	0.95	0.95	0.95	0.95
Hourly flow rate (vph)	114	329	234	468	267	59
Pedestrians						
Lane Width (ft)						
Walking Speed (ft/s)						
Percent Blockage						
Right turn flare (veh)						
Median type	None					
Median storage veh)						
Upstream signal (ft)				506		
pX, platoon unblocked	0.94					
vC, conflicting volume	998	163	326			
vC1, stage 1 conf vol						
vC2, stage 2 conf vol						
vCu, unblocked vol	937	163	326			
tC, single (s)	6.8	6.9	4.1			
tC, 2 stage (s)						
tF (s)	3.5	3.3	2.2			
p0 queue free %	43	61	81			
cM capacity (veh/h)	201	853	1230			

Direction, Lane #	EB 1	EB 2	NB 1	NB 2	SB 1	SB 2
Volume Total	76	367	390	312	178	148
Volume Left	76	38	234	0	0	0
Volume Right	0	329	0	0	0	59
cSH	201	639	1230	1700	1700	1700
Volume to Capacity	0.38	0.57	0.19	0.18	0.10	0.09
Queue Length 95th (ft)	41	92	17	0	0	0
Control Delay (s)	33.4	18.0	5.9	0.0	0.0	0.0
Lane LOS	D	C	A			
Approach Delay (s)	20.6		3.3		0.0	
Approach LOS	C					

Intersection Summary			
Average Delay	7.8		
Intersection Capacity Utilization	50.6%	ICU Level of Service	A
Analysis Period (min)	15		

HCM Signalized Intersection Capacity Analysis
11: Smith Switch Road & Loudoun County Parkway

Kincora
9/25/2008

Movement	EBL	EBR	NBL	NBT	SBT	SBR
Lane Configurations						
Ideal Flow (vphpl)	1900	1900	1900	1900	1900	1900
Total Lost time (s)	4.0			4.0	4.0	
Lane Util. Factor	0.97			0.95	0.95	
Frt	0.99			1.00	0.98	
Flt Protected	0.95			1.00	1.00	
Satd. Flow (prot)	3427			3537	3482	
Flt Permitted	0.95			0.94	1.00	
Satd. Flow (perm)	3427			3332	3482	
Volume (vph)	107	5	11	947	806	98
Peak-hour factor, PHF	0.95	0.95	0.95	0.95	0.95	0.95
Adj. Flow (vph)	113	5	12	997	848	103
RTOR Reduction (vph)	2	0	0	0	14	0
Lane Group Flow (vph)	116	0	0	1009	937	0
Turn Type			Perm			
Protected Phases	4			2	6	
Permitted Phases			2			
Actuated Green, G (s)	9.5			37.2	37.2	
Effective Green, g (s)	12.5			40.2	40.2	
Actuated g/C Ratio	0.21			0.66	0.66	
Clearance Time (s)	7.0			7.0	7.0	
Vehicle Extension (s)	4.0			3.0	3.0	
Lane Grp Cap (vph)	706			2207	2306	
v/s Ratio Prot	c0.03				0.27	
v/s Ratio Perm				c0.30		
v/c Ratio	0.16			0.46	0.41	
Uniform Delay, d1	19.8			5.0	4.7	
Progression Factor	1.00			1.00	1.00	
Incremental Delay, d2	0.1			0.2	0.1	
Delay (s)	20.0			5.1	4.9	
Level of Service	B			A	A	
Approach Delay (s)	20.0			5.1	4.9	
Approach LOS	B			A	A	

Intersection Summary			
HCM Average Control Delay	5.8	HCM Level of Service	A
HCM Volume to Capacity ratio	0.39		
Actuated Cycle Length (s)	60.7	Sum of lost time (s)	8.0
Intersection Capacity Utilization	48.9%	ICU Level of Service	A
Analysis Period (min)	15		

c Critical Lane Group

HCM Signalized Intersection Capacity Analysis
21: Waxpool Road & Pacific Blvd

Kincora
9/25/2008

Movement	EBL	EBT	EBR	WBL	WBT	WBR	NBL	NBT	NBR	SBL	SBT	SBR
Lane Configurations												
Ideal Flow (vphpl)	1900	1900	1900	1900	1900	1900	1900	1900	1900	1900	1900	1900
Total Lost time (s)	3.0	3.0	3.0	3.0	3.0	3.0	3.0	3.0	3.0	3.0	3.0	3.0
Lane Util. Factor	0.94	0.86	1.00	0.97	0.86	1.00	0.94	0.95	1.00	0.94	0.95	1.00
Frt	1.00	1.00	0.85	1.00	1.00	0.85	1.00	1.00	0.85	1.00	1.00	0.85
Flt Protected	0.95	1.00	1.00	0.95	1.00	1.00	0.95	1.00	1.00	0.95	1.00	1.00
Satd. Flow (prot)	4990	6408	1583	3433	6408	1583	4990	3539	1583	4990	3539	1583
Flt Permitted	0.95	1.00	1.00	0.95	1.00	1.00	0.95	1.00	1.00	0.95	1.00	1.00
Satd. Flow (perm)	4990	6408	1583	3433	6408	1583	4990	3539	1583	4990	3539	1583
Volume (vph)	1545	1802	127	23	1422	853	143	142	32	728	91	1248
Peak-hour factor, PHF	0.95	0.95	0.95	0.95	0.95	0.95	0.95	0.95	0.95	0.95	0.95	0.95
Adj. Flow (vph)	1626	1897	134	24	1497	898	151	149	34	766	96	1314
RTOR Reduction (vph)	0	0	0	0	0	0	0	0	0	0	0	0
Lane Group Flow (vph)	1626	1897	134	24	1497	898	151	149	34	766	96	1314
Turn Type	Prot		Free	Prot		Free	Prot		Free	Prot		Free
Protected Phases	1	6		5	2		7	4		3	8	
Permitted Phases			Free			Free			Free			Free
Actuated Green, G (s)	48.8	82.6	140.0	3.4	37.2	140.0	9.6	11.0	140.0	15.0	16.4	140.0
Effective Green, g (s)	52.8	86.6	140.0	7.4	41.2	140.0	13.6	15.0	140.0	19.0	20.4	140.0
Actuated g/C Ratio	0.38	0.62	1.00	0.05	0.29	1.00	0.10	0.11	1.00	0.14	0.15	1.00
Clearance Time (s)	7.0	7.0		7.0	7.0		7.0	7.0		7.0	7.0	
Vehicle Extension (s)	2.0	3.0		2.0	3.0		3.0	3.0		3.0	3.0	
Lane Grp Cap (vph)	1882	3964	1583	181	1886	1583	485	379	1583	677	518	1583
v/s Ratio Prot	c0.33	0.30		0.01	0.23		0.03	0.04		c0.15	0.03	
v/s Ratio Perm			0.08			0.57			0.02			c0.83
v/c Ratio	0.86	0.48	0.08	0.13	0.79	0.57	0.31	0.39	0.02	1.13	0.19	0.83
Uniform Delay, d1	40.3	14.5	0.0	63.2	45.5	0.0	58.8	58.3	0.0	60.5	52.5	0.0
Progression Factor	1.00	1.00	1.00	1.00	1.00	1.00	1.00	1.00	1.00	1.00	1.00	1.00
Incremental Delay, d2	4.2	0.4	0.1	0.1	3.5	1.5	0.4	0.7	0.0	76.8	0.2	5.2
Delay (s)	44.5	14.9	0.1	63.4	49.0	1.5	59.2	58.9	0.0	137.3	52.7	5.2
Level of Service	D	B	A	E	D	A	E	E	A	F	D	A
Approach Delay (s)		27.5			31.5			53.1			53.8	
Approach LOS		C			C			D			D	

Intersection Summary			
HCM Average Control Delay	36.3	HCM Level of Service	D
HCM Volume to Capacity ratio	0.88		
Actuated Cycle Length (s)	140.0	Sum of lost time (s)	3.0
Intersection Capacity Utilization	81.3%	ICU Level of Service	D
Analysis Period (min)	15		

c Critical Lane Group

Movement	WBL	WBR	NBT	NBR	SBL	SBT
Lane Configurations						
Ideal Flow (vphpl)	1900	1900	1900	1900	1900	1900
Total Lost time (s)	4.0	4.0	4.0	4.0	4.0	4.0
Lane Util. Factor	0.97	1.00	0.95	1.00	1.00	0.95
Frt	1.00	0.85	1.00	0.85	1.00	1.00
Flt Protected	0.95	1.00	1.00	1.00	0.95	1.00
Satd. Flow (prot)	3433	1583	3539	1583	1770	3539
Flt Permitted	0.95	1.00	1.00	1.00	0.95	1.00
Satd. Flow (perm)	3433	1583	3539	1583	1770	3539
Volume (vph)	80	517	1050	139	389	662
Peak-hour factor, PHF	0.95	0.95	0.95	0.95	0.95	0.95
Adj. Flow (vph)	84	544	1105	146	409	697
RTOR Reduction (vph)	0	451	0	63	0	0
Lane Group Flow (vph)	84	93	1105	83	409	697
Turn Type		Perm		Perm	Prot	
Protected Phases	8		2		1	6
Permitted Phases		8		2		
Actuated Green, G (s)	12.1	12.1	30.7	30.7	24.1	61.8
Effective Green, g (s)	15.1	15.1	33.7	33.7	27.1	64.8
Actuated g/C Ratio	0.17	0.17	0.38	0.38	0.31	0.74
Clearance Time (s)	7.0	7.0	7.0	7.0	7.0	7.0
Vehicle Extension (s)	2.0	2.0	2.0	2.0	2.0	2.0
Lane Grp Cap (vph)	590	272	1357	607	546	2609
v/s Ratio Prot	0.02		c0.31		c0.23	0.20
v/s Ratio Perm		c0.06		0.05		
v/c Ratio	0.14	0.34	0.81	0.14	0.75	0.27
Uniform Delay, d1	30.9	32.0	24.3	17.6	27.3	3.8
Progression Factor	1.00	1.00	1.00	1.00	1.00	1.00
Incremental Delay, d2	0.0	0.3	3.7	0.0	4.9	0.0
Delay (s)	30.9	32.3	28.0	17.7	32.2	3.8
Level of Service	C	C	C	B	C	A
Approach Delay (s)	32.1		26.8			14.3
Approach LOS	C		C			B

Intersection Summary			
HCM Average Control Delay	23.3	HCM Level of Service	C
HCM Volume to Capacity ratio	0.70		
Actuated Cycle Length (s)	87.9	Sum of lost time (s)	12.0
Intersection Capacity Utilization	68.9%	ICU Level of Service	C
Analysis Period (min)	15		

c Critical Lane Group

Movement	WBL	WBR	NBT	NBR	SBL	SBT
Lane Configurations						
Sign Control	Stop		Free			Free
Grade	0%		0%			0%
Volume (veh/h)	0	57	1062	142	0	742
Peak Hour Factor	0.95	0.95	0.95	0.95	0.95	0.95
Hourly flow rate (vph)	0	60	1118	149	0	781
Pedestrians						
Lane Width (ft)						
Walking Speed (ft/s)						
Percent Blockage						
Right turn flare (veh)						
Median type	None					
Median storage veh)						
Upstream signal (ft)			535			850
pX, platoon unblocked	0.81	0.81			0.81	
vC, conflicting volume	1583	634			1267	
vC1, stage 1 conf vol						
vC2, stage 2 conf vol						
vCu, unblocked vol	1483	304			1091	
tC, single (s)	6.8	6.9			4.1	
tC, 2 stage (s)						
tF (s)	3.5	3.3			2.2	
p0 queue free %	100	89			100	
cM capacity (veh/h)	93	557			512	

Direction, Lane #	WB 1	NB 1	NB 2	SB 1	SB 2
Volume Total	60	745	522	391	391
Volume Left	0	0	0	0	0
Volume Right	60	0	149	0	0
cSH	557	1700	1700	1700	1700
Volume to Capacity	0.11	0.44	0.31	0.23	0.23
Queue Length 95th (ft)	9	0	0	0	0
Control Delay (s)	12.2	0.0	0.0	0.0	0.0
Lane LOS	B				
Approach Delay (s)	12.2	0.0		0.0	
Approach LOS	B				

Intersection Summary			
Average Delay	0.3		
Intersection Capacity Utilization	44.1%	ICU Level of Service	A
Analysis Period (min)	15		

Movement	WBL	WBR	NBT	NBR	SBL	SBT
Lane Configurations						
Ideal Flow (vphpl)	1900	1900	1900	1900	1900	1900
Total Lost time (s)	4.0		4.0			4.0
Lane Util. Factor	1.00		0.95			0.95
Frt	0.95		0.99			1.00
Flt Protected	0.97		1.00			0.99
Satd. Flow (prot)	1711		3516			3521
Flt Permitted	0.97		1.00			0.73
Satd. Flow (perm)	1711		3516			2589
Volume (vph)	90	60	1145	51	76	666
Peak-hour factor, PHF	0.95	0.95	0.95	0.95	0.95	0.95
Adj. Flow (vph)	95	63	1205	54	80	701
RTOR Reduction (vph)	16	0	5	0	0	0
Lane Group Flow (vph)	142	0	1254	0	0	781
Turn Type					Perm	
Protected Phases	8		2			6
Permitted Phases					6	
Actuated Green, G (s)	9.9		35.3			35.3
Effective Green, g (s)	12.9		38.3			38.3
Actuated g/C Ratio	0.22		0.65			0.65
Clearance Time (s)	7.0		7.0			7.0
Vehicle Extension (s)	2.0		2.0			2.0
Lane Grp Cap (vph)	373		2275			1675
v/s Ratio Prot	c0.08		c0.36			
v/s Ratio Perm						0.30
v/c Ratio	0.38		0.55			0.47
Uniform Delay, d1	19.7		5.7			5.3
Progression Factor	1.00		1.00			1.00
Incremental Delay, d2	0.2		0.2			0.1
Delay (s)	20.0		5.9			5.4
Level of Service	B		A			A
Approach Delay (s)	20.0		5.9			5.4
Approach LOS	B		A			A

Intersection Summary			
HCM Average Control Delay	6.7	HCM Level of Service	A
HCM Volume to Capacity ratio	0.51		
Actuated Cycle Length (s)	59.2	Sum of lost time (s)	8.0
Intersection Capacity Utilization	72.5%	ICU Level of Service	C
Analysis Period (min)	15		
c Critical Lane Group			

Movement	WBL	WBR	NBT	NBR	SBL	SBT
Lane Configurations						
Sign Control	Stop		Free			Free
Grade	0%		0%			0%
Volume (veh/h)	0	10	1504	63	0	1051
Peak Hour Factor	0.95	0.95	0.95	0.95	0.95	0.95
Hourly flow rate (vph)	0	11	1583	66	0	1106
Pedestrians						
Lane Width (ft)						
Walking Speed (ft/s)						
Percent Blockage						
Right turn flare (veh)						
Median type	None					
Median storage veh)						
Upstream signal (ft)			844			
pX, platoon unblocked	0.71	0.71			0.71	
vC, conflicting volume	2169	825			1649	
vC1, stage 1 conf vol						
vC2, stage 2 conf vol						
vCu, unblocked vol	2239	345			1506	
tC, single (s)	6.8	6.9			4.1	
tC, 2 stage (s)						
tF (s)	3.5	3.3			2.2	
p0 queue free %	100	98			100	
cM capacity (veh/h)	25	462			313	

Direction, Lane #	WB 1	NB 1	NB 2	SB 1	SB 2
Volume Total	11	1055	594	553	553
Volume Left	0	0	0	0	0
Volume Right	11	0	66	0	0
cSH	462	1700	1700	1700	1700
Volume to Capacity	0.02	0.62	0.35	0.33	0.33
Queue Length 95th (ft)	2	0	0	0	0
Control Delay (s)	13.0	0.0	0.0	0.0	0.0
Lane LOS	B				
Approach Delay (s)	13.0	0.0		0.0	
Approach LOS	B				

Intersection Summary			
Average Delay	0.0		
Intersection Capacity Utilization	53.6%	ICU Level of Service	A
Analysis Period (min)	15		

HCM Unsignalized Intersection Capacity Analysis
30: Site Drive #7 & Pacific Blvd

Kincora
9/25/2008

Movement	WBL	WBR	NBT	NBR	SBL	SBT
Lane Configurations						
Sign Control	Stop		Free			Free
Grade	0%		0%			0%
Volume (veh/h)	0	10	1451	63	0	1051
Peak Hour Factor	0.95	0.95	0.95	0.95	0.95	0.95
Hourly flow rate (vph)	0	11	1527	66	0	1106
Pedestrians						
Lane Width (ft)						
Walking Speed (ft/s)						
Percent Blockage						
Right turn flare (veh)						
Median type	None					
Median storage veh)						
Upstream signal (ft)						
pX, platoon unblocked						
vC, conflicting volume	2114	797			1594	
vC1, stage 1 conf vol						
vC2, stage 2 conf vol						
vCu, unblocked vol	2114	797			1594	
tC, single (s)	6.8	6.9			4.1	
tC, 2 stage (s)						
tF (s)	3.5	3.3			2.2	
p0 queue free %	100	97			100	
cM capacity (veh/h)	44	330			407	

Direction, Lane #	WB 1	NB 1	NB 2	SB 1	SB 2
Volume Total	11	1018	575	553	553
Volume Left	0	0	0	0	0
Volume Right	11	0	66	0	0
cSH	330	1700	1700	1700	1700
Volume to Capacity	0.03	0.60	0.34	0.33	0.33
Queue Length 95th (ft)	2	0	0	0	0
Control Delay (s)	16.3	0.0	0.0	0.0	0.0
Lane LOS	C				
Approach Delay (s)	16.3	0.0		0.0	
Approach LOS	C				

Intersection Summary			
Average Delay	0.1		
Intersection Capacity Utilization	52.1%	ICU Level of Service	A
Analysis Period (min)	15		

HCM Unsignalized Intersection Capacity Analysis
31: Site Drive #6 & Pacific Blvd

Kincora
9/25/2008

Movement	EBL	EBT	EBR	WBL	WBT	WBR	NBL	NBT	NBR	SBL	SBT	SBR
Lane Configurations												
Sign Control		Stop			Stop			Free			Free	
Grade		0%			0%			0%			0%	
Volume (veh/h)	0	0	87	0	0	10	0	1436	25	0	964	54
Peak Hour Factor	0.95	0.95	0.95	0.95	0.95	0.95	0.95	0.95	0.95	0.95	0.95	0.95
Hourly flow rate (vph)	0	0	92	0	0	11	0	1512	26	0	1015	57
Pedestrians												
Lane Width (ft)												
Walking Speed (ft/s)												
Percent Blockage												
Right turn flare (veh)												
Median type		None			None							
Median storage veh)												
Upstream signal (ft)												
pX, platoon unblocked												
vC, conflicting volume	1809	2581	536	2032	2596	769	1072			1538		
vC1, stage 1 conf vol												
vC2, stage 2 conf vol												
vCu, unblocked vol	1809	2581	536	2032	2596	769	1072			1538		
tC, single (s)	7.5	6.5	6.9	7.5	6.5	6.9	4.1			4.1		
tC, 2 stage (s)												
tF (s)	3.5	4.0	3.3	3.5	4.0	3.3	2.2			2.2		
p0 queue free %	100	100	81	100	100	97	100			100		
cM capacity (veh/h)	48	25	489	27	25	344	646			428		

Direction, Lane #	EB 1	WB 1	NB 1	NB 2	SB 1	SB 2
Volume Total	92	11	1008	530	676	395
Volume Left	0	0	0	0	0	0
Volume Right	92	11	0	26	0	57
cSH	489	344	1700	1700	1700	1700
Volume to Capacity	0.19	0.03	0.59	0.31	0.40	0.23
Queue Length 95th (ft)	17	2	0	0	0	0
Control Delay (s)	14.0	15.8	0.0	0.0	0.0	0.0
Lane LOS	B	C				
Approach Delay (s)	14.0	15.8	0.0		0.0	
Approach LOS	B	C				

Intersection Summary			
Average Delay	0.5		
Intersection Capacity Utilization	50.5%	ICU Level of Service	A
Analysis Period (min)	15		

Movement	EBL	EBR	NBL	NBT	SBT	SBR
Lane Configurations						
Sign Control	Stop			Free	Free	
Grade	0%			0%	0%	
Volume (veh/h)	0	97	0	1446	920	79
Peak Hour Factor	0.95	0.95	0.95	0.95	0.95	0.95
Hourly flow rate (vph)	0	102	0	1522	968	83
Pedestrians						
Lane Width (ft)						
Walking Speed (ft/s)						
Percent Blockage						
Right turn flare (veh)						
Median type	None					
Median storage veh)						
Upstream signal (ft)					936	
pX, platoon unblocked	0.98	0.98	0.98			
vC, conflicting volume	1771	526	1052			
vC1, stage 1 conf vol						
vC2, stage 2 conf vol						
vCu, unblocked vol	1766	494	1031			
tC, single (s)	6.8	6.9	4.1			
tC, 2 stage (s)						
tF (s)	3.5	3.3	2.2			
p0 queue free %	100	80	100			
cM capacity (veh/h)	73	510	655			

Direction, Lane #	EB 1	NB 1	NB 2	SB 1	SB 2
Volume Total	102	761	761	646	406
Volume Left	0	0	0	0	0
Volume Right	102	0	0	0	83
cSH	510	1700	1700	1700	1700
Volume to Capacity	0.20	0.45	0.45	0.38	0.24
Queue Length 95th (ft)	19	0	0	0	0
Control Delay (s)	13.8	0.0	0.0	0.0	0.0
Lane LOS	B				
Approach Delay (s)	13.8	0.0		0.0	
Approach LOS	B				

Intersection Summary			
Average Delay	0.5		
Intersection Capacity Utilization	43.3%	ICU Level of Service	A
Analysis Period (min)	15		

Movement	EBL	EBR	NBL	NBT	SBT	SBR
Lane Configurations						
Ideal Flow (vphpl)	1900	1900	1900	1900	1900	1900
Total Lost time (s)	4.0			4.0	4.0	
Lane Util. Factor	1.00			0.95	0.95	
Frt	0.89			1.00	0.99	
Flt Protected	0.99			0.99	1.00	
Satd. Flow (prot)	1643			3510	3508	
Flt Permitted	0.99			0.62	1.00	
Satd. Flow (perm)	1643			2212	3508	
Volume (vph)	44	190	240	1205	809	51
Peak-hour factor, PHF	0.95	0.95	0.95	0.95	0.95	0.95
Adj. Flow (vph)	46	200	253	1268	852	54
RTOR Reduction (vph)	140	0	0	0	2	0
Lane Group Flow (vph)	106	0	0	1521	904	0
Turn Type			Perm			
Protected Phases	4			2	6	
Permitted Phases			2			
Actuated Green, G (s)	12.8			85.3	85.3	
Effective Green, g (s)	15.8			88.3	88.3	
Actuated g/C Ratio	0.14			0.79	0.79	
Clearance Time (s)	7.0			7.0	7.0	
Vehicle Extension (s)	2.0			2.0	2.0	
Lane Grp Cap (vph)	232			1742	2763	
v/s Ratio Prot	c0.06				0.26	
v/s Ratio Perm				c0.69		
v/c Ratio	0.46			0.87	0.33	
Uniform Delay, d1	44.2			8.1	3.4	
Progression Factor	1.00			1.00	1.00	
Incremental Delay, d2	0.5			5.0	0.0	
Delay (s)	44.7			13.1	3.4	
Level of Service	D			B	A	
Approach Delay (s)	44.7			13.1	3.4	
Approach LOS	D			B	A	

Intersection Summary			
HCM Average Control Delay	12.7	HCM Level of Service	B
HCM Volume to Capacity ratio	0.81		
Actuated Cycle Length (s)	112.1	Sum of lost time (s)	8.0
Intersection Capacity Utilization	88.4%	ICU Level of Service	E
Analysis Period (min)	15		
c Critical Lane Group			

Movement	EBL	EBR	NBL	NBT	SBT	SBR
Lane Configurations						
Ideal Flow (vphpl)	1900	1900	1900	1900	1900	1900
Total Lost time (s)	4.0			4.0	4.0	
Lane Util. Factor	1.00			0.95	0.95	
Frt	0.89			1.00	0.97	
Flt Protected	0.99			0.98	1.00	
Satd. Flow (prot)	1647			3460	3428	
Flt Permitted	0.99			0.54	1.00	
Satd. Flow (perm)	1647			1928	3428	
Volume (vph)	64	236	571	679	623	165
Peak-hour factor, PHF	0.95	0.95	0.95	0.95	0.95	0.95
Adj. Flow (vph)	67	248	601	715	656	174
RTOR Reduction (vph)	111	0	0	0	15	0
Lane Group Flow (vph)	204	0	0	1316	815	0
Turn Type			Perm			
Protected Phases	4			2	6	
Permitted Phases			2			
Actuated Green, G (s)	18.4			83.8	83.8	
Effective Green, g (s)	21.4			86.8	86.8	
Actuated g/C Ratio	0.18			0.75	0.75	
Clearance Time (s)	7.0			7.0	7.0	
Vehicle Extension (s)	2.0			2.0	2.0	
Lane Grp Cap (vph)	303			1440	2561	
v/s Ratio Prot	c0.12				0.24	
v/s Ratio Perm				c0.68		
v/c Ratio	0.67			1.41dl	0.32	
Uniform Delay, d1	44.1			11.7	4.9	
Progression Factor	1.00			1.00	1.00	
Incremental Delay, d2	4.6			9.0	0.0	
Delay (s)	48.7			20.7	4.9	
Level of Service	D			C	A	
Approach Delay (s)	48.7			20.7	4.9	
Approach LOS	D			C	A	

Intersection Summary			
HCM Average Control Delay	19.0	HCM Level of Service	B
HCM Volume to Capacity ratio	0.87		
Actuated Cycle Length (s)	116.2	Sum of lost time (s)	8.0
Intersection Capacity Utilization	85.9%	ICU Level of Service	E
Analysis Period (min)	15		

dl Delacto Left Lane. Recode with 1 though lane as a left lane.
c Critical Lane Group

Movement	EBL	EBR	NBL	NBT	SBT	SBR
Lane Configurations						
Ideal Flow (vphpl)	1900	1900	1900	1900	1900	1900
Total Lost time (s)	4.0			4.0	4.0	
Lane Util. Factor	1.00			0.95	0.95	
Frt	0.89			1.00	0.99	
Flt Protected	0.99			0.98	1.00	
Satd. Flow (prot)	1642			3473	3491	
Flt Permitted	0.99			0.61	1.00	
Satd. Flow (perm)	1642			2168	3491	
Volume (vph)	49	225	282	461	565	56
Peak-hour factor, PHF	0.95	0.95	0.95	0.95	0.95	0.95
Adj. Flow (vph)	52	237	297	485	595	59
RTOR Reduction (vph)	111	0	0	0	10	0
Lane Group Flow (vph)	178	0	0	782	644	0
Turn Type			Perm			
Protected Phases	4			2	6	
Permitted Phases			2			
Actuated Green, G (s)	11.7			24.1	24.1	
Effective Green, g (s)	14.7			27.1	27.1	
Actuated g/C Ratio	0.30			0.54	0.54	
Clearance Time (s)	7.0			7.0	7.0	
Vehicle Extension (s)	2.0			2.0	2.0	
Lane Grp Cap (vph)	485			1180	1900	
v/s Ratio Prot	c0.11				0.18	
v/s Ratio Perm				c0.36		
v/c Ratio	0.37			0.66	0.34	
Uniform Delay, d1	13.9			8.1	6.3	
Progression Factor	1.00			1.00	1.00	
Incremental Delay, d2	0.2			1.1	0.0	
Delay (s)	14.0			9.2	6.4	
Level of Service	B			A	A	
Approach Delay (s)	14.0			9.2	6.4	
Approach LOS	B			A	A	

Intersection Summary			
HCM Average Control Delay	8.9	HCM Level of Service	A
HCM Volume to Capacity ratio	0.56		
Actuated Cycle Length (s)	49.8	Sum of lost time (s)	8.0
Intersection Capacity Utilization	64.9%	ICU Level of Service	C
Analysis Period (min)	15		

c Critical Lane Group

Movement	EBL	EBT	WBT	WBR	SWL	SWR
Lane Configurations		↑↑	↑↑			↱↑
Sign Control		Free	Free		Stop	
Grade		0%	0%		0%	
Volume (veh/h)	0	520	223	0	0	373
Peak Hour Factor	0.95	0.95	0.95	0.95	0.95	0.95
Hourly flow rate (vph)	0	547	235	0	0	393
Pedestrians						
Lane Width (ft)						
Walking Speed (ft/s)						
Percent Blockage						
Right turn flare (veh)						
Median type					None	
Median storage veh)						
Upstream signal (ft)		411				
pX, platoon unblocked						
vC, conflicting volume	235				508	117
vC1, stage 1 conf vol						
vC2, stage 2 conf vol						
vCu, unblocked vol	235				508	117
tC, single (s)	4.1				6.8	6.9
tC, 2 stage (s)						
tF (s)	2.2				3.5	3.3
p0 queue free %	100				100	57
cM capacity (veh/h)	1330				494	912

Direction, Lane #	EB 1	EB 2	WB 1	WB 2	SW 1	SW 2
Volume Total	274	274	117	117	196	196
Volume Left	0	0	0	0	0	0
Volume Right	0	0	0	0	196	196
cSH	1700	1700	1700	1700	912	912
Volume to Capacity	0.16	0.16	0.07	0.07	0.22	0.22
Queue Length 95th (ft)	0	0	0	0	20	20
Control Delay (s)	0.0	0.0	0.0	0.0	10.0	10.0
Lane LOS					B	B
Approach Delay (s)	0.0		0.0		10.0	
Approach LOS					B	

Intersection Summary			
Average Delay	3.4		
Intersection Capacity Utilization	25.9%	ICU Level of Service	A
Analysis Period (min)	15		

Movement	EBL	EBR	NBL	NBT	SBT	SBR
Lane Configurations	↱↑			↑↑	↑↑	
Sign Control	Stop			Free	Free	
Grade	0%			0%	0%	
Volume (veh/h)	49	216	245	265	405	64
Peak Hour Factor	0.95	0.95	0.95	0.95	0.95	0.95
Hourly flow rate (vph)	52	227	258	279	426	67
Pedestrians						
Lane Width (ft)						
Walking Speed (ft/s)						
Percent Blockage						
Right turn flare (veh)						
Median type	None					
Median storage veh)						
Upstream signal (ft)				506		
pX, platoon unblocked						
vC, conflicting volume	1115	247	494			
vC1, stage 1 conf vol						
vC2, stage 2 conf vol						
vCu, unblocked vol	1115	247	494			
tC, single (s)	6.8	6.9	4.1			
tC, 2 stage (s)						
tF (s)	3.5	3.3	2.2			
p0 queue free %	66	70	76			
cM capacity (veh/h)	153	753	1066			

Direction, Lane #	EB 1	EB 2	NB 1	NB 2	SB 1	SB 2
Volume Total	34	245	351	186	284	209
Volume Left	34	17	258	0	0	0
Volume Right	0	227	0	0	0	67
cSH	153	590	1066	1700	1700	1700
Volume to Capacity	0.22	0.41	0.24	0.11	0.17	0.12
Queue Length 95th (ft)	21	51	24	0	0	0
Control Delay (s)	35.2	15.3	7.6	0.0	0.0	0.0
Lane LOS	E	C	A			
Approach Delay (s)	17.8		5.0		0.0	
Approach LOS	C					

Intersection Summary			
Average Delay	5.8		
Intersection Capacity Utilization	45.9%	ICU Level of Service	A
Analysis Period (min)	15		

APPENDIX D-6

INTERSECTION CAPACITY ANALYSIS RESULTS – FULL BUILD-OUT YEAR (2025) CONDITIONS WITHOUT DEVELOPMENT

HCM Signalized Intersection Capacity Analysis
5: Route 7 & Countryside Blvd.

Kincora
Future Background 2025

Movement	EBL	EBT	EBR	WBL	WBT	WBR	NBL	NBT	NBR	SBL	SBT	SBR
Lane Configurations												
Ideal Flow (vphpl)	1900	1900	1900	1900	1900	1900	1900	1900	1900	1900	1900	1900
Total Lost time (s)	3.0	3.0	3.0	3.0	3.0	3.0	3.0	3.0	3.0	3.0	3.0	3.0
Lane Util. Factor	0.97	0.86	1.00	0.97	0.86	1.00	0.97	0.95	1.00	0.97	0.95	1.00
Frt	1.00	1.00	0.85	1.00	1.00	0.85	1.00	1.00	0.85	1.00	1.00	0.85
Flt Protected	0.95	1.00	1.00	0.95	1.00	1.00	0.95	1.00	1.00	0.95	1.00	1.00
Satd. Flow (prot)	3433	6408	1583	3433	6408	1583	3433	3539	1583	3433	3539	1583
Flt Permitted	0.95	1.00	1.00	0.95	1.00	1.00	0.95	1.00	1.00	0.95	1.00	1.00
Satd. Flow (perm)	3433	6408	1583	3433	6408	1583	3433	3539	1583	3433	3539	1583
Volume (vph)	287	3072	166	134	2031	108	86	70	153	165	94	240
Peak-hour factor, PHF	0.95	0.95	0.95	0.95	0.95	0.95	0.95	0.95	0.95	0.95	0.95	0.95
Adj. Flow (vph)	302	3234	175	141	2138	114	91	74	161	174	99	253
RTOR Reduction (vph)	0	0	0	0	0	39	0	0	0	0	0	39
Lane Group Flow (vph)	302	3234	175	141	2138	75	91	74	161	174	99	214
Turn Type	Prot		Free	Prot		pm+ov	Prot		Free	Prot		pm+ov
Protected Phases	1	6		5	2	3	7	4		3	8	1
Permitted Phases			Free			2			Free			8
Actuated Green, G (s)	16.5	83.7	150.0	11.0	78.2	90.2	8.5	15.3	150.0	12.0	18.8	35.3
Effective Green, g (s)	20.5	87.7	150.0	15.0	82.2	98.2	12.5	19.3	150.0	16.0	22.8	43.3
Actuated g/C Ratio	0.14	0.58	1.00	0.10	0.55	0.65	0.08	0.13	1.00	0.11	0.15	0.29
Clearance Time (s)	7.0	7.0		7.0	7.0	7.0	7.0	7.0		7.0	7.0	7.0
Vehicle Extension (s)	2.0	2.0		3.0	2.0	2.0	2.0	2.0		2.0	2.0	2.0
Lane Grp Cap (vph)	469	3747	1583	343	3512	1068	286	455	1583	366	538	489
v/s Ratio Prot	c0.09	c0.50		0.04	0.33	0.01	0.03	0.02		c0.05	0.03	c0.06
v/s Ratio Perm			0.11			0.04			0.10			0.08
v/c Ratio	0.64	0.86	0.11	0.41	0.61	0.07	0.32	0.16	0.10	0.48	0.18	0.44
Uniform Delay, d1	61.3	26.1	0.0	63.4	23.0	9.4	64.7	58.2	0.0	63.1	55.5	43.4
Progression Factor	1.00	1.00	1.00	1.00	1.00	1.00	1.00	1.00	1.00	1.00	1.00	1.00
Incremental Delay, d2	2.3	2.9	0.1	0.8	0.8	0.0	0.2	0.1	0.1	0.4	0.1	0.2
Delay (s)	63.6	29.0	0.1	64.2	23.8	9.4	65.0	58.2	0.1	63.4	55.5	43.7
Level of Service	E	C	A	E	C	A	E	E	A	E	E	D
Approach Delay (s)		30.5			25.5			31.4			52.4	
Approach LOS		C			C			C			D	

Intersection Summary			
HCM Average Control Delay	30.5	HCM Level of Service	C
HCM Volume to Capacity ratio	0.72		
Actuated Cycle Length (s)	150.0	Sum of lost time (s)	6.0
Intersection Capacity Utilization	70.9%	ICU Level of Service	C
Analysis Period (min)	15		

c Critical Lane Group

HCM Signalized Intersection Capacity Analysis
6: Route 7 & Palisade Parkway

Kincora
Future Background 2025

Movement	EBL	EBT	EBR	WBL	WBT	WBR	NBL	NBT	NBR	SBL	SBT	SBR
Lane Configurations												
Ideal Flow (vphpl)	1900	1900	1900	1900	1900	1900	1900	1900	1900	1900	1900	1900
Total Lost time (s)	3.0	3.0	3.0	3.0	3.0	3.0	3.0	3.0	3.0	3.0	3.0	3.0
Lane Util. Factor	0.97	0.86	1.00	1.00	0.86	1.00	0.97	1.00	1.00	0.97	1.00	1.00
Frt	1.00	1.00	0.85	1.00	1.00	0.85	1.00	1.00	0.85	1.00	1.00	0.85
Flt Protected	0.95	1.00	1.00	0.95	1.00	1.00	0.95	1.00	1.00	0.95	1.00	1.00
Satd. Flow (prot)	3433	6408	1583	1770	6408	1583	3433	1863	1583	3433	1863	1583
Flt Permitted	0.95	1.00	1.00	0.95	1.00	1.00	0.95	1.00	1.00	0.95	1.00	1.00
Satd. Flow (perm)	3433	6408	1583	1770	6408	1583	3433	1863	1583	3433	1863	1583
Volume (vph)	162	2807	381	123	1993	73	58	34	42	131	82	208
Peak-hour factor, PHF	0.95	0.95	0.95	0.95	0.95	0.95	0.95	0.95	0.95	0.95	0.95	0.95
Adj. Flow (vph)	171	2955	401	129	2098	77	61	36	44	138	86	219
RTOR Reduction (vph)	0	0	0	0	0	0	0	0	6	0	0	26
Lane Group Flow (vph)	171	2955	401	129	2098	77	61	36	38	138	86	193
Turn Type	Prot		Free	Prot		Free	Prot		pm+ov	Prot		pm+ov
Protected Phases	1	6		5	2		7	4	5	3	8	1
Permitted Phases			Free			Free			4			8
Actuated Green, G (s)	10.7	68.3	120.0	10.9	68.5	120.0	4.0	4.8	15.7	8.0	8.8	19.5
Effective Green, g (s)	14.7	72.3	120.0	14.9	72.5	120.0	8.0	8.8	23.7	12.0	12.8	27.5
Actuated g/C Ratio	0.12	0.60	1.00	0.12	0.60	1.00	0.07	0.07	0.20	0.10	0.11	0.23
Clearance Time (s)	7.0	7.0		7.0	7.0		7.0	7.0	7.0	7.0	7.0	7.0
Vehicle Extension (s)	2.0	4.0		2.0	4.0		3.0	3.0	2.0	3.0	3.0	2.0
Lane Grp Cap (vph)	421	3861	1583	220	3872	1583	229	137	352	343	199	402
v/s Ratio Prot	0.05	c0.46		c0.07	0.33		0.02	0.02	0.01	c0.04	0.05	c0.06
v/s Ratio Perm			c0.25			0.05			0.01			0.06
v/c Ratio	0.41	0.77	0.25	0.59	0.54	0.05	0.27	0.26	0.11	0.40	0.43	0.48
Uniform Delay, d1	48.6	17.6	0.0	49.6	14.0	0.0	53.2	52.5	39.5	50.6	50.2	40.1
Progression Factor	1.00	1.00	1.00	1.00	1.00	1.00	1.00	1.00	1.00	1.00	1.00	1.00
Incremental Delay, d2	0.2	1.5	0.4	2.6	0.5	0.1	0.6	1.0	0.1	0.8	1.5	0.3
Delay (s)	48.9	19.1	0.4	52.2	14.5	0.1	53.8	53.6	39.5	51.4	51.7	40.4
Level of Service	D	B	A	D	B	A	D	D	D	D	D	D
Approach Delay (s)		18.4			16.2			49.3			46.0	
Approach LOS		B			B			D			D	

Intersection Summary			
HCM Average Control Delay	20.2	HCM Level of Service	C
HCM Volume to Capacity ratio	0.67		
Actuated Cycle Length (s)	120.0	Sum of lost time (s)	9.0
Intersection Capacity Utilization	67.9%	ICU Level of Service	C
Analysis Period (min)	15		

c Critical Lane Group

Movement	WBL	WBR	NBT	NBR	SBL	SBT
Lane Configurations						
Ideal Flow (vphpl)	1900	1900	1900	1900	1900	1900
Total Lost time (s)	3.0	3.0	3.0		3.0	3.0
Lane Util. Factor	1.00	1.00	0.95		1.00	0.95
Frt	1.00	0.85	0.97		1.00	1.00
Flt Protected	0.95	1.00	1.00		0.95	1.00
Satd. Flow (prot)	1770	1583	3440		1770	3539
Flt Permitted	0.95	1.00	1.00		0.44	1.00
Satd. Flow (perm)	1770	1583	3440		825	3539
Volume (vph)	89	191	304	70	159	550
Peak-hour factor, PHF	0.95	0.95	0.95	0.95	0.95	0.95
Adj. Flow (vph)	94	201	320	74	167	579
RTOR Reduction (vph)	0	123	17	0	0	0
Lane Group Flow (vph)	94	78	377	0	167	579
Turn Type		pm+ov			pm+pt	
Protected Phases	4	1	2		1	6
Permitted Phases		4			6	
Actuated Green, G (s)	4.9	12.4	18.5		33.0	33.0
Effective Green, g (s)	8.9	20.4	23.0		37.5	37.5
Actuated g/C Ratio	0.17	0.39	0.44		0.72	0.72
Clearance Time (s)	7.0	7.0	7.5		7.0	7.5
Vehicle Extension (s)	2.0	2.0	2.0		2.0	2.0
Lane Grp Cap (vph)	301	707	1510		798	2533
v/s Ratio Prot	c0.05	0.02	0.11		0.05	c0.16
v/s Ratio Perm		0.03			0.10	
v/c Ratio	0.31	0.11	0.25		0.21	0.23
Uniform Delay, d1	19.1	10.2	9.3		2.5	2.5
Progression Factor	1.00	1.00	1.00		1.00	1.00
Incremental Delay, d2	0.2	0.0	0.0		0.0	0.0
Delay (s)	19.3	10.2	9.3		2.6	2.5
Level of Service	B	B	A		A	A
Approach Delay (s)	13.1		9.3			2.6
Approach LOS	B		A			A

Intersection Summary			
HCM Average Control Delay	6.6	HCM Level of Service	A
HCM Volume to Capacity ratio	0.24		
Actuated Cycle Length (s)	52.4	Sum of lost time (s)	6.0
Intersection Capacity Utilization	37.1%	ICU Level of Service	A
Analysis Period (min)	15		

c Critical Lane Group

Movement	EBL	EBT	EBR	WBL	WBT	WBR	NBL	NBT	NBR	SBL	SBT	SBR
Lane Configurations												
Ideal Flow (vphpl)	1900	1900	1900	1900	1900	1900	1900	1900	1900	1900	1900	1900
Total Lost time (s)		4.0	4.0		4.0	4.0	4.0	4.0	4.0	4.0	4.0	4.0
Lane Util. Factor		1.00	1.00		1.00	1.00	1.00	0.95	1.00	1.00	0.95	1.00
Frt		1.00	0.85		1.00	0.85	1.00	1.00	0.85	1.00	1.00	0.85
Flt Protected		0.95	1.00		0.96	1.00	0.95	1.00	1.00	0.95	1.00	1.00
Satd. Flow (prot)		1778	1583		1783	1583	1770	3539	1583	1770	3539	1583
Flt Permitted		0.67	1.00		0.72	1.00	0.34	1.00	1.00	0.58	1.00	1.00
Satd. Flow (perm)		1257	1583		1335	1583	632	3539	1583	1075	3539	1583
Volume (vph)	41	2	145	71	9	38	35	271	15	9	684	39
Peak-hour factor, PHF	0.95	0.95	0.95	0.95	0.95	0.95	0.95	0.95	0.95	0.95	0.95	0.95
Adj. Flow (vph)	43	2	153	75	9	40	37	285	16	9	720	41
RTOR Reduction (vph)	0	0	132	0	0	35	0	0	5	0	0	14
Lane Group Flow (vph)	0	45	21	0	84	5	37	285	11	9	720	27
Turn Type	Perm		Perm	Perm		Perm	pm+pt		Perm	pm+pt		Perm
Protected Phases		4			8		5	2		1	6	
Permitted Phases	4		4	8		8	2		2	6		6
Actuated Green, G (s)		9.3	9.3		9.3	9.3	61.9	58.7	58.7	57.5	56.5	56.5
Effective Green, g (s)		12.3	12.3		12.3	12.3	67.9	61.7	61.7	63.5	59.5	59.5
Actuated g/C Ratio		0.14	0.14		0.14	0.14	0.75	0.69	0.69	0.71	0.68	0.66
Clearance Time (s)		7.0	7.0		7.0	7.0	7.0	7.0	7.0	7.0	7.0	7.0
Vehicle Extension (s)		2.0	2.0		2.0	2.0	2.0	2.0	2.0	2.0	2.0	2.0
Lane Grp Cap (vph)		172	216		182	216	555	2426	1085	789	2340	1047
v/s Ratio Prot							c0.00	0.08		0.00	c0.20	
v/s Ratio Perm		0.04	0.01		c0.06	0.00	0.05		0.01	0.01		0.02
v/c Ratio		0.26	0.10		0.46	0.03	0.07	0.12	0.01	0.01	0.31	0.03
Uniform Delay, d1		34.8	34.0		35.8	33.7	3.0	4.8	4.5	3.9	6.5	5.3
Progression Factor		1.00	1.00		1.00	1.00	1.00	1.00	1.00	1.00	1.00	1.00
Incremental Delay, d2		0.3	0.1		0.7	0.0	0.0	0.1	0.0	0.0	0.3	0.0
Delay (s)		35.1	34.1		36.5	33.7	3.0	4.9	4.5	3.9	6.8	5.3
Level of Service		D	C		D	C	A	A	A	A	A	A
Approach Delay (s)		34.3			35.6			4.7			6.7	
Approach LOS		C			D			A			A	

Intersection Summary			
HCM Average Control Delay	12.6	HCM Level of Service	B
HCM Volume to Capacity ratio	0.33		
Actuated Cycle Length (s)	90.0	Sum of lost time (s)	16.0
Intersection Capacity Utilization	43.3%	ICU Level of Service	A
Analysis Period (min)	15		

c Critical Lane Group

Movement	EBL	EBT	EBR	WBL	WBT	WBR	NBL	NBT	NBR	SBL	SBT	SBR
Lane Configurations												
Ideal Flow (vphpl)	1900	1900	1900	1900	1900	1900	1900	1900	1900	1900	1900	1900
Total Lost time (s)	3.0	3.0	3.0	3.0	3.0	3.0	3.0	3.0	3.0	3.0	3.0	3.0
Lane Util. Factor	1.00	0.95	1.00	0.97	0.95	1.00	0.97	0.95	1.00	0.97	0.95	1.00
Frt	1.00	1.00	0.85	1.00	1.00	0.85	1.00	1.00	0.85	1.00	1.00	0.85
Flt Protected	0.95	1.00	1.00	0.95	1.00	1.00	0.95	1.00	1.00	0.95	1.00	1.00
Satd. Flow (prot)	1770	3539	1583	3433	3539	1583	3433	3539	1583	3433	3539	1583
Flt Permitted	0.95	1.00	1.00	0.95	1.00	1.00	0.95	1.00	1.00	0.95	1.00	1.00
Satd. Flow (perm)	1770	3539	1583	3433	3539	1583	3433	3539	1583	3433	3539	1583
Volume (vph)	288	383	220	205	150	157	116	654	296	318	470	69
Peak-hour factor, PHF	0.95	0.95	0.95	0.95	0.95	0.95	0.95	0.95	0.95	0.95	0.95	0.95
Adj. Flow (vph)	303	403	232	216	158	165	122	688	312	335	495	73
RTOR Reduction (vph)	0	0	0	0	0	0	0	0	0	0	0	0
Lane Group Flow (vph)	303	403	232	216	158	165	122	688	312	335	495	73
Turn Type	Prot		Free	Prot		Free	Prot		Free	Prot		Free
Protected Phases	7	4		3	8		5	2		1	6	
Permitted Phases			Free			Free			Free			Free
Actuated Green, G (s)	20.3	24.5	111.9	12.4	16.6	111.9	9.8	31.4	111.9	15.6	37.2	111.9
Effective Green, g (s)	24.3	28.5	111.9	16.4	20.6	111.9	13.8	35.4	111.9	19.6	41.2	111.9
Actuated g/C Ratio	0.22	0.25	1.00	0.15	0.18	1.00	0.12	0.32	1.00	0.18	0.37	1.00
Clearance Time (s)	7.0	7.0		7.0	7.0		7.0	7.0		7.0	7.0	
Vehicle Extension (s)	3.0	3.0		3.0	3.0		3.0	5.0		3.0	5.0	
Lane Grp Cap (vph)	384	901	1583	503	652	1583	423	1120	1583	601	1303	1583
v/s Ratio Prot	c0.17	c0.11		0.06	0.04		0.04	c0.19		c0.10	0.14	
v/s Ratio Perm			0.15			0.10			0.20			0.05
v/c Ratio	0.79	0.45	0.15	0.43	0.24	0.10	0.29	0.61	0.20	0.56	0.38	0.05
Uniform Delay, d1	41.4	35.1	0.0	43.5	39.0	0.0	44.6	32.5	0.0	42.2	26.0	0.0
Progression Factor	1.00	1.00	1.00	1.00	1.00	1.00	1.00	1.00	1.00	1.00	1.00	1.00
Incremental Delay, d2	10.3	0.4	0.2	0.6	0.2	0.1	0.4	1.5	0.3	1.1	0.4	0.1
Delay (s)	51.7	35.4	0.2	44.1	39.2	0.1	45.0	33.9	0.3	43.3	26.4	0.1
Level of Service	D	D	A	D	D	A	D	C	A	D	C	A
Approach Delay (s)		32.0			29.2			25.8			30.5	
Approach LOS		C			C			C			C	

Intersection Summary			
HCM Average Control Delay	29.2	HCM Level of Service	C
HCM Volume to Capacity ratio	0.60		
Actuated Cycle Length (s)	111.9	Sum of lost time (s)	9.0
Intersection Capacity Utilization	68.9%	ICU Level of Service	C
Analysis Period (min)	15		

c Critical Lane Group

Movement	EBL	EBR	NBL	NBT	SBT	SBR
Lane Configurations						
Ideal Flow (vphpl)	1900	1900	1900	1900	1900	1900
Total Lost time (s)	4.0			4.0	4.0	
Lane Util. Factor	0.97			0.95	0.95	
Frt	0.95			1.00	0.99	
Flt Protected	0.97			1.00	1.00	
Satd. Flow (prot)	3318			3535	3488	
Flt Permitted	0.97			0.81	1.00	
Satd. Flow (perm)	3318			2884	3488	
Volume (vph)	117	62	48	1974	1436	152
Peak-hour factor, PHF	0.95	0.95	0.95	0.95	0.95	0.95
Adj. Flow (vph)	123	65	51	2078	1512	160
RTOR Reduction (vph)	57	0	0	0	6	0
Lane Group Flow (vph)	131	0	0	2129	1666	0
Turn Type			Perm			
Protected Phases	4			2	6	
Permitted Phases			2			
Actuated Green, G (s)	11.4			88.5	88.5	
Effective Green, g (s)	14.4			91.5	91.5	
Actuated g/C Ratio	0.13			0.80	0.80	
Clearance Time (s)	7.0			7.0	7.0	
Vehicle Extension (s)	4.0			3.0	3.0	
Lane Grp Cap (vph)	419			2317	2802	
v/s Ratio Prot	c0.04				0.48	
v/s Ratio Perm				c0.74		
v/c Ratio	0.31			0.92	0.59	
Uniform Delay, d1	45.3			8.4	4.2	
Progression Factor	1.00			1.00	1.00	
Incremental Delay, d2	0.6			6.4	0.3	
Delay (s)	45.8			14.8	4.6	
Level of Service	D			B	A	
Approach Delay (s)	45.8			14.8	4.6	
Approach LOS	D			B	A	

Intersection Summary			
HCM Average Control Delay	12.0	HCM Level of Service	B
HCM Volume to Capacity ratio	0.84		
Actuated Cycle Length (s)	113.9	Sum of lost time (s)	8.0
Intersection Capacity Utilization	104.0%	ICU Level of Service	G
Analysis Period (min)	15		

c Critical Lane Group

Movement	EBL	EBT	EBR	WBL	WBT	WBR	NBL	NBT	NBR	SBL	SBT	SBR
Lane Configurations												
Ideal Flow (vphpl)	1900	1900	1900	1900	1900	1900	1900	1900	1900	1900	1900	1900
Total Lost time (s)	4.0	4.0	4.0	3.0	4.0	3.0	4.0	3.0	3.0	3.0	3.0	4.0
Lane Util. Factor	0.97	0.95	1.00	0.97	0.95	1.00	0.97	0.95	1.00	0.97	0.95	1.00
Frt	1.00	1.00	0.85	1.00	1.00	0.85	1.00	1.00	0.85	1.00	1.00	0.85
Flt Protected	0.95	1.00	1.00	0.95	1.00	1.00	0.95	1.00	1.00	0.95	1.00	1.00
Satd. Flow (prot)	3433	3539	1583	3433	3539	1583	3433	3539	1583	3433	3539	1583
Flt Permitted	0.95	1.00	1.00	0.95	1.00	1.00	0.95	1.00	1.00	0.95	1.00	1.00
Satd. Flow (perm)	3433	3539	1583	3433	3539	1583	3433	3539	1583	3433	3539	1583
Volume (vph)	483	304	469	121	415	65	378	86	112	39	178	164
Peak-hour factor, PHF	0.95	0.95	0.95	0.95	0.95	0.95	0.95	0.95	0.95	0.95	0.95	0.95
Adj. Flow (vph)	508	320	494	127	437	68	398	91	118	41	187	173
RTOR Reduction (vph)	0	0	0	0	0	0	0	0	80	0	0	0
Lane Group Flow (vph)	508	320	494	127	437	68	398	91	38	41	187	173
Turn Type	Prot		Free	Prot		Free	Prot		pm+ov	Prot		Free
Protected Phases	1	6		5	2		7	4	5	3	8	
Permitted Phases			Free			Free			4			Free
Actuated Green, G (s)	25.4	68.9	140.0	10.0	53.5	140.0	20.2	28.0	38.0	5.6	13.4	140.0
Effective Green, g (s)	28.4	71.9	140.0	14.0	56.5	140.0	23.2	31.5	45.5	9.6	16.9	140.0
Actuated g/C Ratio	0.20	0.51	1.00	0.10	0.40	1.00	0.17	0.22	0.32	0.07	0.12	1.00
Clearance Time (s)	7.0	7.0		7.0	7.0		7.0	6.5	7.0	7.0	6.5	
Vehicle Extension (s)	2.5	4.0		2.5	4.0		2.5	2.5	2.5	2.5	2.5	
Lane Grp Cap (vph)	696	1818	1583	343	1428	1583	569	796	548	235	427	1583
v/s Ratio Prot	c0.15	0.09		0.04	0.12		c0.12	0.03	0.01	0.01	c0.05	
v/s Ratio Perm			c0.31			0.04			0.02			0.11
v/c Ratio	0.73	0.18	0.31	0.37	0.31	0.04	0.70	0.11	0.07	0.17	0.44	0.11
Uniform Delay, d1	52.2	18.2	0.0	58.9	28.4	0.0	55.1	43.2	32.6	61.5	57.1	0.0
Progression Factor	1.00	1.00	1.00	1.00	1.00	1.00	1.00	1.00	1.00	1.00	1.00	1.00
Incremental Delay, d2	3.6	0.2	0.5	0.5	0.6	0.1	3.5	0.0	0.0	0.3	0.5	0.1
Delay (s)	55.8	18.4	0.5	59.4	29.0	0.1	58.6	43.2	32.7	61.7	57.7	0.1
Level of Service	E	B	A	E	C	A	E	D	C	E	E	A
Approach Delay (s)		26.1			32.0			51.2			33.3	
Approach LOS		C			C			D			C	

Intersection Summary			
HCM Average Control Delay	33.5	HCM Level of Service	C
HCM Volume to Capacity ratio	0.49		
Actuated Cycle Length (s)	140.0	Sum of lost time (s)	11.0
Intersection Capacity Utilization	55.3%	ICU Level of Service	B
Analysis Period (min)	15		
c Critical Lane Group			

Movement	EBL	EBT	EBR	WBL	WBT	WBR	NBL	NBT	NBR	SBL	SBT	SBR
Lane Configurations												
Ideal Flow (vphpl)	1900	1900	1900	1900	1900	1900	1900	1900	1900	1900	1900	1900
Total Lost time (s)	3.0	3.0	3.0	3.0	3.0	3.0	3.0	3.0	3.0	3.0	3.0	3.0
Lane Util. Factor	0.97	1.00	1.00	0.97	1.00	1.00	0.97	0.95	1.00	1.00	0.95	1.00
Frt	1.00	1.00	0.85	1.00	1.00	0.85	1.00	1.00	0.85	1.00	1.00	0.85
Flt Protected	0.95	1.00	1.00	0.95	1.00	1.00	0.95	1.00	1.00	0.95	1.00	1.00
Satd. Flow (prot)	3433	1863	1583	3433	1863	1583	3433	3539	1583	1770	3539	1583
Flt Permitted	0.95	1.00	1.00	0.95	1.00	1.00	0.95	1.00	1.00	0.95	1.00	1.00
Satd. Flow (perm)	3433	1863	1583	3433	1863	1583	3433	3539	1583	1770	3539	1583
Volume (vph)	72	75	79	190	365	18	161	702	220	4	765	116
Peak-hour factor, PHF	0.95	0.95	0.95	0.95	0.95	0.95	0.95	0.95	0.95	0.95	0.95	0.95
Adj. Flow (vph)	76	79	83	200	384	19	169	739	232	4	805	122
RTOR Reduction (vph)	0	0	66	0	0	13	0	0	120	0	0	73
Lane Group Flow (vph)	76	79	17	200	384	6	169	739	112	4	805	49
Turn Type	Prot		Perm	Prot		Perm	Prot		Perm	Prot		Perm
Protected Phases	7	4		3	8		1	6		5	2	
Permitted Phases			4			8			6			2
Actuated Green, G (s)	7.6	18.7	18.7	14.2	25.3	25.3	11.8	51.6	51.6	1.7	41.5	41.5
Effective Green, g (s)	11.6	23.7	23.7	18.2	30.3	30.3	15.8	56.1	56.1	5.7	46.0	46.0
Actuated g/C Ratio	0.10	0.20	0.20	0.16	0.26	0.26	0.14	0.48	0.48	0.05	0.40	0.40
Clearance Time (s)	7.0	8.0	8.0	7.0	8.0	8.0	7.0	7.5	7.5	7.0	7.5	7.5
Vehicle Extension (s)	3.0	3.0	3.0	3.0	3.0	3.0	3.0	3.0	3.0	3.0	3.0	3.0
Lane Grp Cap (vph)	344	382	324	540	488	415	469	1716	768	87	1407	629
v/s Ratio Prot	0.02	0.04		c0.06	c0.21		c0.05	0.21		0.00	c0.23	
v/s Ratio Perm			0.01			0.00			0.07			0.03
v/c Ratio	0.22	0.21	0.05	0.37	0.79	0.01	0.36	0.43	0.15	0.05	0.57	0.08
Uniform Delay, d1	47.9	38.2	37.0	43.6	39.7	31.6	45.4	19.4	16.5	52.4	27.2	21.7
Progression Factor	1.00	1.00	1.00	1.00	1.00	1.00	1.00	1.00	1.00	1.00	1.00	1.00
Incremental Delay, d2	0.3	0.3	0.1	0.4	8.2	0.0	0.5	0.2	0.1	0.2	0.6	0.1
Delay (s)	48.2	38.5	37.0	44.1	47.9	31.6	45.8	19.6	16.6	52.6	27.7	21.7
Level of Service	D	D	D	D	D	C	D	B	B	D	C	C
Approach Delay (s)		41.1			46.1			22.9			27.1	
Approach LOS		D			D			C			C	

Intersection Summary			
HCM Average Control Delay	30.5	HCM Level of Service	C
HCM Volume to Capacity ratio	0.58		
Actuated Cycle Length (s)	115.7	Sum of lost time (s)	12.0
Intersection Capacity Utilization	74.1%	ICU Level of Service	D
Analysis Period (min)	15		
c Critical Lane Group			

Movement	EBL	EBR	NBL	NBT	SBT	SBR
Lane Configurations						
Ideal Flow (vphpl)	1900	1900	1900	1900	1900	1900
Total Lost time (s)	3.0	3.0	3.0	3.0	3.0	3.0
Lane Util. Factor	1.00	1.00	1.00	0.95	0.95	1.00
Frt	1.00	0.85	1.00	1.00	1.00	0.85
Flt Protected	0.95	1.00	0.95	1.00	1.00	1.00
Satd. Flow (prot)	1770	1583	1770	3539	3539	1583
Flt Permitted	0.95	1.00	0.22	1.00	1.00	1.00
Satd. Flow (perm)	1770	1583	401	3539	3539	1583
Volume (vph)	97	54	172	1133	863	142
Peak-hour factor, PHF	0.95	0.95	0.95	0.95	0.95	0.95
Adj. Flow (vph)	102	57	181	1193	908	149
RTOR Reduction (vph)	0	47	0	0	0	46
Lane Group Flow (vph)	102	10	181	1193	908	103
Turn Type		Perm	pm+pt			pm+ov
Protected Phases	4		1	6	2	4
Permitted Phases		4	6			2
Actuated Green, G (s)	7.9	7.9	45.2	45.2	30.7	38.6
Effective Green, g (s)	11.9	11.9	48.7	48.7	34.2	46.1
Actuated g/C Ratio	0.18	0.18	0.73	0.73	0.51	0.69
Clearance Time (s)	7.0	7.0	7.0	6.5	6.5	7.0
Vehicle Extension (s)	3.0	3.0	4.0	4.0	4.0	3.0
Lane Grp Cap (vph)	316	283	530	2586	1817	1167
v/s Ratio Prot	c0.06		0.06	c0.34	c0.26	0.02
v/s Ratio Perm		0.01	0.19			0.05
v/c Ratio	0.32	0.04	0.34	0.46	0.50	0.09
Uniform Delay, d1	23.8	22.6	4.2	3.6	10.6	3.4
Progression Factor	1.00	1.00	1.00	1.00	1.00	1.00
Incremental Delay, d2	0.6	0.1	0.5	0.2	0.3	0.0
Delay (s)	24.4	22.7	4.7	3.8	10.9	3.4
Level of Service	C	C	A	A	B	A
Approach Delay (s)	23.8			3.9	9.8	
Approach LOS	C			A	A	

Intersection Summary			
HCM Average Control Delay	7.6	HCM Level of Service	A
HCM Volume to Capacity ratio	0.46		
Actuated Cycle Length (s)	66.6	Sum of lost time (s)	9.0
Intersection Capacity Utilization	48.8%	ICU Level of Service	A
Analysis Period (min)	15		

c Critical Lane Group

Movement	EBL	EBT	EBR	WBL	WBT	WBR	NBL	NBT	NBR	SBL	SBT	SBR
Lane Configurations												
Ideal Flow (vphpl)	1900	1900	1900	1900	1900	1900	1900	1900	1900	1900	1900	1900
Lane Width	12	12	12	12	12	13	12	12	12	12	12	12
Total Lost time (s)	3.0	3.0	3.0	3.0	3.0	3.0	3.0	3.0	3.0	3.0	3.0	3.0
Lane Util. Factor	0.97	0.91	1.00	0.97	0.86	1.00	0.97	0.95	1.00	0.97	0.95	1.00
Frt	1.00	1.00	0.85	1.00	1.00	0.85	1.00	1.00	0.85	1.00	1.00	0.85
Flt Protected	0.95	1.00	1.00	0.95	1.00	1.00	0.95	1.00	1.00	0.95	1.00	1.00
Satd. Flow (prot)	3433	5085	1583	3433	6408	1636	3433	3539	1583	3433	3539	1583
Flt Permitted	0.95	1.00	1.00	0.95	1.00	1.00	0.95	1.00	1.00	0.95	1.00	1.00
Satd. Flow (perm)	3433	5085	1583	3433	6408	1636	3433	3539	1583	3433	3539	1583
Volume (vph)	226	1418	252	103	455	482	62	227	110	789	535	427
Peak-hour factor, PHF	0.95	0.95	0.95	0.95	0.95	0.95	0.95	0.95	0.95	0.95	0.95	0.95
Adj. Flow (vph)	238	1493	265	108	479	507	65	239	116	831	563	449
RTOR Reduction (vph)	0	0	0	0	0	0	0	0	9	0	0	67
Lane Group Flow (vph)	238	1493	265	108	479	507	65	239	107	831	563	382
Turn Type	Prot		Free	Prot		Free	Prot		pm+ov	Prot		pm+ov
Protected Phases	1	6		5	2		3	8	5	7	4	1
Permitted Phases			Free			Free			8			4
Actuated Green, G (s)	13.8	47.1	130.0	8.7	42.0	130.0	4.0	14.2	22.9	32.5	42.7	56.5
Effective Green, g (s)	17.8	51.1	130.0	12.7	46.0	130.0	8.0	17.7	30.4	36.5	46.2	64.0
Actuated g/C Ratio	0.14	0.39	1.00	0.10	0.35	1.00	0.06	0.14	0.23	0.28	0.36	0.49
Clearance Time (s)	7.0	7.0		7.0	7.0		7.0	6.5	7.0	7.0	6.5	7.0
Vehicle Extension (s)	2.0	3.0		2.0	3.0		2.0	2.0	2.0	2.0	2.0	2.0
Lane Grp Cap (vph)	470	1999	1583	335	2267	1636	211	482	407	964	1258	816
v/s Ratio Prot	c0.07	c0.29		0.03	0.07		0.02	0.07	0.03	c0.24	0.16	c0.06
v/s Ratio Perm			0.17			0.31			0.04			0.18
v/c Ratio	0.51	0.75	0.17	0.32	0.21	0.31	0.31	0.50	0.26	0.86	0.45	0.47
Uniform Delay, d1	52.0	33.9	0.0	54.6	29.3	0.0	58.4	52.0	40.6	44.4	32.1	21.8
Progression Factor	1.00	1.00	1.00	0.82	0.80	1.00	1.00	1.00	1.00	1.00	1.00	1.00
Incremental Delay, d2	0.3	2.6	0.2	0.2	0.2	0.5	0.3	0.3	0.1	7.8	0.1	0.2
Delay (s)	52.3	36.5	0.2	45.0	23.7	0.5	58.7	52.3	40.8	52.1	32.2	21.9
Level of Service	D	D	A	D	C	A	E	D	D	D	C	C
Approach Delay (s)		33.6			15.0			50.1			38.7	
Approach LOS		C			B			D			D	

Intersection Summary			
HCM Average Control Delay	32.8	HCM Level of Service	C
HCM Volume to Capacity ratio	0.69		
Actuated Cycle Length (s)	130.0	Sum of lost time (s)	3.0
Intersection Capacity Utilization	73.7%	ICU Level of Service	D
Analysis Period (min)	15		

c Critical Lane Group

Movement	EBL	EBT	EBR	WBL	WBT	WBR	NBL	NBT	NBR	SBL	SBT	SBR
Lane Configurations												
Ideal Flow (vphpl)	1900	1900	1900	1900	1900	1900	1900	1900	1900	1900	1900	1900
Total Lost time (s)	3.0	3.0	3.0	3.0	3.0	3.0	3.0	3.0	3.0	3.0	3.0	
Lane Util. Factor	1.00	0.91	1.00	1.00	0.91	1.00	1.00	0.95	1.00	1.00	0.95	
Frt	1.00	1.00	0.85	1.00	1.00	0.85	1.00	1.00	0.85	1.00	0.90	
Flt Protected	0.95	1.00	1.00	0.95	1.00	1.00	0.95	1.00	1.00	0.95	1.00	
Satd. Flow (prot)	1770	5085	1583	1770	5085	1583	1770	3539	1583	1770	3189	
Flt Permitted	0.95	1.00	1.00	0.95	1.00	1.00	0.73	1.00	1.00	0.54	1.00	
Satd. Flow (perm)	1770	5085	1583	1770	5085	1583	1354	3539	1583	997	3189	
Volume (vph)	125	2262	55	242	902	202	72	63	138	104	14	28
Peak-hour factor, PHF	0.95	0.95	0.95	0.95	0.95	0.95	0.95	0.95	0.95	0.95	0.95	0.95
Adj. Flow (vph)	132	2381	58	255	949	213	76	66	145	109	15	29
RTOR Reduction (vph)	0	0	23	0	0	62	0	0	0	0	26	0
Lane Group Flow (vph)	132	2381	35	255	949	151	76	66	145	109	18	0
Turn Type	Prot		pm+ov	Prot		pm+ov	pm+pt		Free	pm+pt		
Protected Phases	1	6	3	5	2	7	3	8		7	4	
Permitted Phases			6			2	8		Free	4		
Actuated Green, G (s)	12.5	68.1	72.1	22.1	77.2	86.9	9.6	5.6	130.0	20.3	11.3	
Effective Green, g (s)	16.5	71.6	77.6	25.6	80.7	92.4	15.1	9.1	130.0	23.8	14.8	
Actuated g/C Ratio	0.13	0.55	0.60	0.20	0.62	0.71	0.12	0.07	1.00	0.18	0.11	
Clearance Time (s)	7.0	6.5	5.0	6.5	6.5	5.0	5.0	6.5		5.0	6.5	
Vehicle Extension (s)	2.0	3.0	2.0	2.0	3.0	2.0	2.0	2.0		2.0	2.0	
Lane Grp Cap (vph)	225	2801	981	349	3157	1162	176	248	1583	252	363	
v/s Ratio Prot	0.07	c0.47	0.00	c0.14	0.19	0.01	0.02	0.02		c0.04	0.01	
v/s Ratio Perm			0.02			0.08	0.03		0.09	c0.04		
v/c Ratio	0.59	0.85	0.04	0.73	0.30	0.13	0.43	0.27	0.09	0.43	0.05	
Uniform Delay, d1	53.5	24.7	10.8	49.0	11.5	6.0	53.1	57.3	0.0	46.3	51.3	
Progression Factor	1.17	0.69	0.20	1.00	1.00	1.00	1.00	1.00	1.00	1.00	1.00	
Incremental Delay, d2	1.7	2.4	0.0	6.6	0.2	0.0	0.6	0.2	0.1	0.4	0.3	
Delay (s)	64.5	19.5	2.1	55.6	11.7	6.0	53.7	57.5	0.1	46.7	51.6	
Level of Service	E	B	A	E	B	A	D	E	A	D	D	
Approach Delay (s)		21.4			18.8			27.5			48.1	
Approach LOS		C			B			C			D	

Intersection Summary			
HCM Average Control Delay	21.9	HCM Level of Service	C
HCM Volume to Capacity ratio	0.74		
Actuated Cycle Length (s)	130.0	Sum of lost time (s)	9.0
Intersection Capacity Utilization	79.5%	ICU Level of Service	D
Analysis Period (min)	15		

c Critical Lane Group

Movement	EBL	EBT	EBR	WBL	WBT	WBR	NBL	NBT	NBR	SBL	SBT	SBR
Lane Configurations												
Ideal Flow (vphpl)	1900	1900	1900	1900	1900	1900	1900	1900	1900	1900	1900	1900
Total Lost time (s)	3.0	3.0	3.0	3.0	3.0	3.0	3.0	3.0	3.0	3.0	3.0	3.0
Lane Util. Factor	0.94	0.86	1.00	0.97	0.86	1.00	0.97	0.95	1.00	0.97	0.95	1.00
Frt	1.00	1.00	0.85	1.00	1.00	0.85	1.00	1.00	0.85	1.00	1.00	0.85
Flt Protected	0.95	1.00	1.00	0.95	1.00	1.00	0.95	1.00	1.00	0.95	1.00	1.00
Satd. Flow (prot)	4990	6408	1583	3433	6408	1583	3433	3539	1583	3433	3539	1583
Flt Permitted	0.95	1.00	1.00	0.95	1.00	1.00	0.95	1.00	1.00	0.95	1.00	1.00
Satd. Flow (perm)	4990	6408	1583	3433	6408	1583	3433	3539	1583	3433	3539	1583
Volume (vph)	208	4073	230	438	2447	286	226	5	106	149	53	62
Peak-hour factor, PHF	0.95	0.95	0.95	0.95	0.95	0.95	0.95	0.95	0.95	0.95	0.95	0.95
Adj. Flow (vph)	219	4287	242	461	2576	301	238	5	112	157	56	65
RTOR Reduction (vph)	0	0	79	0	0	0	0	0	0	0	0	0
Lane Group Flow (vph)	219	4287	163	461	2576	301	238	5	112	157	56	85
Turn Type	Prot		Perm	Prot		Free	Prot		Free	Prot		Free
Protected Phases	1	6		5	2		7	4		3	8	
Permitted Phases			6			Free			Free			Free
Actuated Green, G (s)	11.0	90.9	90.9	22.9	102.8	160.0	10.0	1.8	180.0	16.4	8.2	160.0
Effective Green, g (s)	15.0	94.9	94.9	26.9	106.8	160.0	14.0	5.8	160.0	20.4	12.2	160.0
Actuated g/C Ratio	0.09	0.59	0.59	0.17	0.67	1.00	0.09	0.04	1.00	0.13	0.08	1.00
Clearance Time (s)	7.0	7.0	7.0	7.0	7.0		7.0	7.0		7.0	7.0	
Vehicle Extension (s)	2.0	3.0	3.0	2.0	3.0		3.0	3.0		3.0	3.0	
Lane Grp Cap (vph)	468	3801	939	577	4277	1583	300	128	1583	438	270	1583
v/s Ratio Prot	0.04	c0.67		c0.13	0.40		c0.07	0.00		c0.05	c0.02	
v/s Ratio Perm			0.10			0.19			0.07			0.04
v/c Ratio	0.47	1.13	0.17	0.80	0.60	0.19	0.79	0.04	0.07	0.36	0.21	0.04
Uniform Delay, d1	68.7	32.5	14.8	64.0	14.8	0.0	71.6	74.4	0.0	63.8	69.4	0.0
Progression Factor	1.00	1.00	1.00	1.00	1.00	1.00	1.00	1.00	1.00	1.00	1.00	1.00
Incremental Delay, d2	0.3	61.4	0.4	7.1	0.6	0.3	13.4	0.1	0.1	0.5	0.4	0.0
Delay (s)	69.0	94.0	15.2	71.1	15.4	0.3	85.0	74.5	0.1	64.3	69.7	0.0
Level of Service	E	F	B	E	B	A	F	E	A	E	E	A
Approach Delay (s)		88.8			21.7			58.1			50.4	
Approach LOS		F			C			E			D	

Intersection Summary			
HCM Average Control Delay	60.7	HCM Level of Service	E
HCM Volume to Capacity ratio	0.95		
Actuated Cycle Length (s)	160.0	Sum of lost time (s)	9.0
Intersection Capacity Utilization	94.6%	ICU Level of Service	F
Analysis Period (min)	15		

c Critical Lane Group

Movement	EBL	EBT	EBR	WBL	WBT	WBR	NBL	NBT	NBR	SBL	SBT	SBR
Lane Configurations												
Ideal Flow (vphpl)	1900	1900	1900	1900	1900	1900	1900	1900	1900	1900	1900	1900
Total Lost time (s)		3.0		3.0	3.0			3.0	3.0		3.0	
Lane Util. Factor		0.95		1.00	0.95			1.00	1.00		1.00	
Frt		0.98		1.00	1.00			1.00	0.85		0.91	
Flt Protected		1.00		0.95	1.00			0.95	1.00		0.99	
Satd. Flow (prot)		3460		1770	3537			1776	1583		1676	
Flt Permitted		0.90		0.11	1.00			0.72	1.00		0.95	
Satd. Flow (perm)		3131		197	3537			1332	1583		1600	
Volume (vph)	24	1104	188	218	1339	7	118	3	144	4	3	14
Peak-hour factor, PHF	0.95	0.95	0.95	0.95	0.95	0.95	0.95	0.95	0.95	0.95	0.95	0.95
Adj. Flow (vph)	25	1162	198	229	1409	7	124	3	152	4	3	15
RTOR Reduction (vph)	0	11	0	0	0	0	0	0	0	0	13	0
Lane Group Flow (vph)	0	1374	0	229	1416	0	0	127	152	0	9	0
Turn Type	Perm			pm+pt			Perm		pm+ov	Perm		
Protected Phases		6		5	2			4	5		8	
Permitted Phases	6			2			4		4	8		
Actuated Green, G (s)		45.9		60.9	60.9			10.8	20.3		10.8	
Effective Green, g (s)		48.9		63.9	63.9			13.8	25.8		13.8	
Actuated g/C Ratio		0.58		0.76	0.76			0.16	0.31		0.16	
Clearance Time (s)		6.0		5.5	6.0			6.0	5.5		6.0	
Vehicle Extension (s)		4.0		2.0	4.0			3.0	2.0		3.0	
Lane Grp Cap (vph)		1829		376	2700			220	545		264	
v/s Ratio Prot				c0.09	0.40				0.04			
v/s Ratio Perm		c0.44		0.38				c0.10	0.06		0.01	
v/c Ratio		0.75		0.61	0.52			0.58	0.28		0.04	
Uniform Delay, d1		12.9		13.2	3.9			32.3	21.9		29.4	
Progression Factor		1.00		1.00	1.00			1.00	1.00		1.00	
Incremental Delay, d2		1.9		1.9	0.2			3.6	0.1		0.1	
Delay (s)		14.8		15.2	4.1			35.9	22.0		29.4	
Level of Service		B		B	A			D	C		C	
Approach Delay (s)		14.8			5.7			28.3			29.4	
Approach LOS		B			A			C			C	

Intersection Summary			
HCM Average Control Delay	11.5	HCM Level of Service	B
HCM Volume to Capacity ratio	0.70		
Actuated Cycle Length (s)	83.7	Sum of lost time (s)	9.0
Intersection Capacity Utilization	97.8%	ICU Level of Service	F
Analysis Period (min)	15		
c Critical Lane Group			

Movement	EBL	EBT	WBT	WBR	SBL	SBR
Lane Configurations						
Ideal Flow (vphpl)	1900	1900	1900	1900	1900	1900
Total Lost time (s)	3.0	3.0	3.0	3.0	3.0	3.0
Lane Util. Factor	0.97	0.95	0.91	0.91	0.97	1.00
Frt	1.00	1.00	1.00	0.85	1.00	0.85
Flt Protected	0.95	1.00	1.00	1.00	0.95	1.00
Satd. Flow (prot)	3433	3539	3390	1441	3433	1583
Flt Permitted	0.95	1.00	1.00	1.00	0.95	1.00
Satd. Flow (perm)	3433	3539	3390	1441	3433	1583
Volume (vph)	758	495	536	418	329	618
Peak-hour factor, PHF	0.95	0.95	0.95	0.95	0.95	0.95
Adj. Flow (vph)	798	521	564	438	346	651
RTOR Reduction (vph)	0	0	0	15	0	456
Lane Group Flow (vph)	798	521	564	423	346	195
Turn Type	Prot			pm+ov		Perm
Protected Phases	5	2	6	4	4	
Permitted Phases				6		4
Actuated Green, G (s)	21.2	47.0	18.8	36.1	17.3	17.3
Effective Green, g (s)	25.2	51.0	22.8	44.6	21.8	21.8
Actuated g/C Ratio	0.32	0.65	0.29	0.57	0.28	0.28
Clearance Time (s)	7.0	7.0	7.0	7.5	7.5	7.5
Vehicle Extension (s)	2.0	3.0	3.0	3.0	3.0	3.0
Lane Grp Cap (vph)	1098	2290	981	870	950	438
v/s Ratio Prot	c0.23	0.15	c0.17	c0.13	0.10	
v/s Ratio Perm				0.18		0.12
v/c Ratio	0.73	0.23	0.57	0.49	0.36	0.45
Uniform Delay, d1	23.7	5.8	23.9	10.2	22.9	23.5
Progression Factor	1.00	1.00	1.00	1.00	1.00	1.00
Incremental Delay, d2	2.1	0.1	0.8	0.4	0.2	0.7
Delay (s)	25.8	5.8	24.7	10.7	23.2	24.2
Level of Service	C	A	C	B	C	C
Approach Delay (s)		17.9	18.6		23.9	
Approach LOS		B	B		C	

Intersection Summary			
HCM Average Control Delay	19.9	HCM Level of Service	B
HCM Volume to Capacity ratio	0.59		
Actuated Cycle Length (s)	78.8	Sum of lost time (s)	6.0
Intersection Capacity Utilization	64.2%	ICU Level of Service	C
Analysis Period (min)	15		
c Critical Lane Group			

Movement	EBL	EBT	EBR	WBL	WBT	WBR	NBL	NBT	NBR	SBL	SBT	SBR
Lane Configurations												
Ideal Flow (vphpl)	1900	1900	1900	1900	1900	1900	1900	1900	1900	1900	1900	1900
Total Lost time (s)	4.0		4.0	4.0		4.0	4.0	4.0	4.0	4.0	4.0	4.0
Lane Util. Factor	0.97		1.00	1.00		1.00	1.00	0.95	1.00	1.00	0.95	1.00
Frt	1.00		0.85	1.00		0.85	1.00	1.00	0.85	1.00	1.00	0.85
Flt Protected	0.95		1.00	0.95		1.00	0.95	1.00	1.00	0.95	1.00	1.00
Satd. Flow (prot)	3433		1583	1770		1583	1770	3539	1583	1770	3539	1583
Flt Permitted	0.95		1.00	0.95		1.00	0.95	1.00	1.00	0.95	1.00	1.00
Satd. Flow (perm)	3433		1583	1770		1583	1770	3539	1583	1770	3539	1583
Volume (vph)	139	0	258	15	0	46	509	1415	113	338	1217	237
Peak-hour factor, PHF	0.95	0.95	0.95	0.95	0.95	0.95	0.95	0.95	0.95	0.95	0.95	0.95
Adj. Flow (vph)	146	0	272	16	0	48	536	1489	119	356	1281	249
RTOR Reduction (vph)	0	0	0	0	0	0	0	0	33	0	0	118
Lane Group Flow (vph)	146	0	272	16	0	48	536	1489	86	356	1281	131
Turn Type	Prot		Free	Prot		Free	Prot		pm+ov	Prot		pm+ov
Protected Phases	7	4		3	8		5	2	3	1	6	7
Permitted Phases			Free			Free			2			6
Actuated Green, G (s)	7.6		115.1	7.6		115.1	39.4	61.8	69.4	26.7	49.1	56.7
Effective Green, g (s)	8.6		115.1	8.6		115.1	42.4	64.8	73.4	29.7	52.1	60.7
Actuated g/C Ratio	0.07		1.00	0.07		1.00	0.37	0.56	0.64	0.26	0.45	0.53
Clearance Time (s)	5.0			5.0			7.0	7.0	5.0	7.0	7.0	5.0
Vehicle Extension (s)	2.0			2.0			2.0	3.0	2.0	2.0	3.0	2.0
Lane Grp Cap (vph)	257		1583	132		1583	652	1992	1065	457	1602	890
v/s Ratio Prot	c0.04			0.01			c0.30	0.42	0.01	0.20	c0.36	0.01
v/s Ratio Perm			0.17			0.03			0.05			0.07
v/c Ratio	0.57		0.17	0.12		0.03	0.82	0.75	0.08	0.78	0.80	0.15
Uniform Delay, d1	51.5		0.0	49.7		0.0	32.9	19.0	8.0	39.7	27.0	13.9
Progression Factor	1.00		1.00	1.00		1.00	1.00	1.00	1.00	1.00	1.00	1.00
Incremental Delay, d2	1.7		0.2	0.2		0.0	7.9	1.6	0.0	7.5	2.9	0.0
Delay (s)	53.2		0.2	49.9		0.0	40.8	20.5	8.0	47.1	29.9	14.0
Level of Service	D		A	D		A	D	C	A	D	C	B
Approach Delay (s)		18.7			12.5			24.9			31.1	
Approach LOS		B			B			C			C	

Intersection Summary			
HCM Average Control Delay	26.7	HCM Level of Service	C
HCM Volume to Capacity ratio	0.79		
Actuated Cycle Length (s)	115.1	Sum of lost time (s)	12.0
Intersection Capacity Utilization	82.5%	ICU Level of Service	E
Analysis Period (min)	15		

c Critical Lane Group

Movement	EBL	EBT	EBR	WBL	WBT	WBR	NBL	NBT	NBR	SBL	SBT	SBR
Lane Configurations												
Sign Control		Free			Free			Stop			Stop	
Grade		0%			0%			0%			0%	
Volume (veh/h)	0	450	0	0	165	0	0	0	0	0	0	0
Peak Hour Factor	0.92	0.92	0.92	0.92	0.92	0.92	0.92	0.92	0.92	0.92	0.92	0.92
Hourly flow rate (vph)	0	489	0	0	179	0	0	0	0	0	0	0
Pedestrians												
Lane Width (ft)												
Walking Speed (ft/s)												
Percent Blockage												
Right turn flare (veh)												
Median type								None			None	
Median storage veh)												
Upstream signal (ft)												
pX, platoon unblocked												
vC, conflicting volume	179			489			579	668	245	424	668	90
vC1, stage 1 conf vol												
vC2, stage 2 conf vol												
vCu, unblocked vol	179			489			579	668	245	424	668	90
tC, single (s)	4.1			4.1			7.5	6.5	6.9	7.5	6.5	6.9
tC, 2 stage (s)												
tF (s)	2.2			2.2			3.5	4.0	3.3	3.5	4.0	3.3
p0 queue free %	100			100			100	100	100	100	100	100
cM capacity (veh/h)	1394			1070			398	377	756	514	377	950

Direction, Lane #	EB 1	EB 2	EB 3	EB 4	WB 1	WB 2	WB 3	WB 4	NB 1	NB 2	SB 1	SB 2
Volume Total	0	245	245	0	0	90	90	0	0	0	0	0
Volume Left	0	0	0	0	0	0	0	0	0	0	0	0
Volume Right	0	0	0	0	0	0	0	0	0	0	0	0
cSH	1700	1700	1700	1700	1700	1700	1700	1700	1700	1700	1700	1700
Volume to Capacity	0.00	0.14	0.14	0.00	0.00	0.05	0.05	0.00	0.00	0.00	0.00	0.00
Queue Length 95th (ft)	0	0	0	0	0	0	0	0	0	0	0	0
Control Delay (s)	0.0	0.0	0.0	0.0	0.0	0.0	0.0	0.0	0.0	0.0	0.0	0.0
Lane LOS									A	A	A	A
Approach Delay (s)	0.0				0.0				0.0		0.0	
Approach LOS									A		A	

Intersection Summary			
Average Delay	0.0		
Intersection Capacity Utilization	15.8%	ICU Level of Service	A
Analysis Period (min)	15		

Movement	EBL	EBT	WBT	WBR	SWL	SWR
Lane Configurations		↑↑	↑↑			↱↱
Sign Control		Free	Free		Stop	
Grade		0%	0%		0%	
Volume (veh/h)	0	0	0	0	0	0
Peak Hour Factor	0.95	0.95	0.95	0.95	0.95	0.95
Hourly flow rate (vph)	0	0	0	0	0	0
Pedestrians						
Lane Width (ft)						
Walking Speed (ft/s)						
Percent Blockage						
Right turn flare (veh)						
Median type					None	
Median storage veh)						
Upstream signal (ft)						
pX, platoon unblocked						
vC, conflicting volume	0				0	0
vC1, stage 1 conf vol						
vC2, stage 2 conf vol						
vCu, unblocked vol	0				0	0
tC, single (s)	4.1				6.8	6.9
tC, 2 stage (s)						
tF (s)	2.2				3.5	3.3
p0 queue free %	100				100	100
cM capacity (veh/h)	1622				1023	1084

Direction, Lane #	EB 1	EB 2	WB 1	WB 2	SW 1	SW 2
Volume Total	0	0	0	0	0	0
Volume Left	0	0	0	0	0	0
Volume Right	0	0	0	0	0	0
cSH	1700	1700	1700	1700	1700	1700
Volume to Capacity	0.00	0.00	0.00	0.00	0.00	0.00
Queue Length 95th (ft)	0	0	0	0	0	0
Control Delay (s)	0.0	0.0	0.0	0.0	0.0	0.0
Lane LOS					A	A
Approach Delay (s)	0.0		0.0		0.0	
Approach LOS					A	

Intersection Summary			
Average Delay	0.0		
Intersection Capacity Utilization	0.0%	ICU Level of Service	A
Analysis Period (min)	15		

Movement	EBL	EBT	EBR	WBL	WBT	WBR	NBL	NBT	NBR	SBL	SBT	SBR
Lane Configurations												
Ideal Flow (vphpl)	1900	1900	1900	1900	1900	1900	1900	1900	1900	1900	1900	1900
Total Lost time (s)	3.0	3.0	3.0	3.0	3.0	3.0	3.0	3.0	3.0	3.0	3.0	3.0
Lane Util. Factor	0.97	0.86	1.00	0.97	0.86	1.00	0.97	0.95	1.00	0.97	0.95	1.00
Frt	1.00	1.00	0.85	1.00	1.00	0.85	1.00	1.00	0.85	1.00	1.00	0.85
Flt Protected	0.95	1.00	1.00	0.95	1.00	1.00	0.95	1.00	1.00	0.95	1.00	1.00
Satd. Flow (prot)	3433	6408	1583	3433	6408	1583	3433	3539	1583	3433	3539	1583
Flt Permitted	0.95	1.00	1.00	0.95	1.00	1.00	0.95	1.00	1.00	0.95	1.00	1.00
Satd. Flow (perm)	3433	6408	1583	3433	6408	1583	3433	3539	1583	3433	3539	1583
Volume (vph)	591	2943	175	651	2730	214	286	148	413	186	163	333
Peak-hour factor, PHF	0.95	0.95	0.95	0.95	0.95	0.95	0.95	0.95	0.95	0.95	0.95	0.95
Adj. Flow (vph)	622	3098	184	685	2874	225	301	156	435	196	172	351
RTOR Reduction (vph)	0	0	0	0	0	43	0	0	0	0	0	1
Lane Group Flow (vph)	622	3098	184	685	2874	182	301	156	435	196	172	350
Turn Type	Prot		Free	Prot		pm+ov	Prot		Free	Prot		pm+ov
Protected Phases	1	6		5	2	3	7	4		3	8	1
Permitted Phases			Free			2			Free			8
Actuated Green, G (s)	31.0	64.5	150.0	34.4	67.9	79.8	10.0	11.2	150.0	11.9	13.1	44.1
Effective Green, g (s)	35.0	68.5	150.0	38.4	71.9	87.8	14.0	15.2	150.0	15.9	17.1	52.1
Actuated g/C Ratio	0.23	0.46	1.00	0.26	0.48	0.59	0.09	0.10	1.00	0.11	0.11	0.35
Clearance Time (s)	7.0	7.0		7.0	7.0	7.0	7.0	7.0		7.0	7.0	7.0
Vehicle Extension (s)	2.0	2.0		3.0	2.0	2.0	2.0	2.0		2.0	2.0	2.0
Lane Grp Cap (vph)	801	2926	1583	879	3072	958	320	359	1583	364	403	581
v/s Ratio Prot	0.18	c0.48		c0.20	0.45	0.02	c0.09	0.04		0.06	0.05	c0.14
v/s Ratio Perm			0.12			0.09			c0.27			0.08
v/c Ratio	0.78	1.06	0.12	0.78	0.94	0.19	0.94	0.43	0.27	0.54	0.43	0.60
Uniform Delay, d1	53.8	40.8	0.0	51.9	36.9	14.5	67.6	63.4	0.0	63.6	61.9	40.4
Progression Factor	1.00	1.00	1.00	1.00	1.00	1.00	1.00	1.00	1.00	1.00	1.00	1.00
Incremental Delay, d2	4.3	34.9	0.1	4.4	6.9	0.0	34.6	0.3	0.4	0.8	0.3	1.2
Delay (s)	58.2	75.6	0.1	56.3	43.7	14.5	102.2	63.7	0.4	64.3	62.2	41.6
Level of Service	E	E	A	E	D	B	F	E	A	E	E	D
Approach Delay (s)		69.3			44.3			45.8			52.7	
Approach LOS		E			D			D			D	

Intersection Summary			
HCM Average Control Delay	55.6	HCM Level of Service	E
HCM Volume to Capacity ratio	0.90		
Actuated Cycle Length (s)	150.0	Sum of lost time (s)	9.0
Intersection Capacity Utilization	87.7%	ICU Level of Service	E
Analysis Period (min)	15		

c Critical Lane Group

Movement	EBL	EBT	EBR	WBL	WBT	WBR	NBL	NBT	NBR	SBL	SBT	SBR
Lane Configurations												
Ideal Flow (vphpl)	1900	1900	1900	1900	1900	1900	1900	1900	1900	1900	1900	1900
Total Lost time (s)	3.0	3.0	3.0	3.0	3.0	3.0	3.0	3.0	3.0	3.0	3.0	3.0
Lane Util. Factor	0.97	0.86	1.00	1.00	0.86	1.00	0.97	1.00	1.00	0.97	1.00	1.00
Frt	1.00	1.00	0.85	1.00	1.00	0.85	1.00	1.00	0.85	1.00	1.00	0.85
Flt Protected	0.95	1.00	1.00	0.95	1.00	1.00	0.95	1.00	1.00	0.95	1.00	1.00
Satd. Flow (prot)	3433	6408	1583	1770	6408	1583	3433	3433	1863	1583	3433	1863	1583
Flt Permitted	0.95	1.00	1.00	0.95	1.00	1.00	0.95	1.00	1.00	0.95	1.00	1.00
Satd. Flow (perm)	3433	6408	1583	1770	6408	1583	3433	1863	1583	3433	1863	1583
Volume (vph)	263	3124	25	74	2934	161	391	97	234	225	77	234
Peak-hour factor, PHF	0.95	0.95	0.95	0.95	0.95	0.95	0.95	0.95	0.95	0.95	0.95	0.95
Adj. Flow (vph)	277	3288	26	78	3088	169	412	102	246	237	81	246
RTOR Reduction (vph)	0	0	0	0	0	0	0	0	8	0	0	4
Lane Group Flow (vph)	277	3288	26	78	3088	169	412	102	238	237	81	242
Turn Type	Prot		Free	Prot		Free	Prot		pm+ov	Prot		pm+ov
Protected Phases	1	6		5	2		7	4	5	3	8	1
Permitted Phases			Free			Free			4			8
Actuated Green, G (s)	11.5	83.0	120.0	8.1	59.6	120.0	16.9	10.9	19.0	10.0	4.0	15.5
Effective Green, g (s)	15.5	67.0	120.0	12.1	63.6	120.0	20.9	14.9	27.0	14.0	8.0	23.5
Actuated g/C Ratio	0.13	0.56	1.00	0.10	0.53	1.00	0.17	0.12	0.22	0.12	0.07	0.20
Clearance Time (s)	7.0	7.0		7.0	7.0		7.0	7.0	7.0	7.0	7.0	7.0
Vehicle Extension (s)	2.0	4.0		2.0	4.0		3.0	3.0	2.0	3.0	3.0	2.0
Lane Grp Cap (vph)	443	3578	1583	178	3396	1583	598	231	396	401	124	350
v/s Ratio Prot	0.08	c0.51		0.04	0.48		c0.12	0.05	c0.06	0.07	0.04	c0.09
v/s Ratio Perm			0.02			0.11			0.09			0.06
v/c Ratio	0.63	0.92	0.02	0.44	0.91	0.11	0.69	0.44	0.60	0.59	0.65	0.69
Uniform Delay, d1	49.5	24.0	0.0	50.8	25.6	0.0	46.5	48.7	41.7	50.3	54.6	44.9
Progression Factor	1.00	1.00	1.00	1.00	1.00	1.00	1.00	1.00	1.00	1.00	1.00	1.00
Incremental Delay, d2	2.0	5.0	0.0	0.6	4.8	0.1	3.3	1.3	1.8	2.3	11.7	4.7
Delay (s)	51.5	29.1	0.0	51.4	30.3	0.1	49.8	50.0	43.4	52.8	66.3	49.6
Level of Service	D	C	A	D	C	A	D	D	D	D	E	D
Approach Delay (s)		30.6			29.3			47.8			53.3	
Approach LOS		C			C			D			D	

Intersection Summary			
HCM Average Control Delay	33.2	HCM Level of Service	C
HCM Volume to Capacity ratio	0.81		
Actuated Cycle Length (s)	120.0	Sum of lost time (s)	3.0
Intersection Capacity Utilization	78.2%	ICU Level of Service	D
Analysis Period (min)	15		

c Critical Lane Group

Movement	WBL	WBR	NBT	NBR	SBL	SBT
Lane Configurations						
Ideal Flow (vphpl)	1900	1900	1900	1900	1900	1900
Total Lost time (s)	3.0	3.0	3.0		3.0	3.0
Lane Util. Factor	1.00	1.00	0.95		1.00	0.95
Frt	1.00	0.85	0.98		1.00	1.00
Flt Protected	0.95	1.00	1.00		0.95	1.00
Satd. Flow (prot)	1770	1583	3465		1770	3539
Flt Permitted	0.95	1.00	1.00		0.19	1.00
Satd. Flow (perm)	1770	1583	3465		356	3539
Volume (vph)	112	262	717	117	250	587
Peak-hour factor, PHF	0.95	0.95	0.95	0.95	0.95	0.95
Adj. Flow (vph)	118	276	755	123	263	618
RTOR Reduction (vph)	0	84	11	0	0	0
Lane Group Flow (vph)	118	192	867	0	263	618
Turn Type		pm+ov			pm+pt	
Protected Phases	4	1	2		1	6
Permitted Phases		4			6	
Actuated Green, G (s)	7.0	15.7	20.1		35.8	35.8
Effective Green, g (s)	11.0	23.7	24.6		40.3	40.3
Actuated g/C Ratio	0.19	0.41	0.43		0.70	0.70
Clearance Time (s)	7.0	7.0	7.5		7.0	7.5
Vehicle Extension (s)	2.0	2.0	2.0		2.0	2.0
Lane Grp Cap (vph)	340	738	1488		564	2489
v/s Ratio Prot	c0.07	0.06	c0.25		c0.10	0.17
v/s Ratio Perm		0.06			0.22	
v/c Ratio	0.35	0.26	0.58		0.47	0.25
Uniform Delay, d1	20.0	11.0	12.4		4.9	3.1
Progression Factor	1.00	1.00	1.00		1.00	1.00
Incremental Delay, d2	0.2	0.1	0.4		0.2	0.0
Delay (s)	20.3	11.1	12.8		5.2	3.1
Level of Service	C	B	B		A	A
Approach Delay (s)	13.8		12.8			3.7
Approach LOS	B		B			A

Intersection Summary			
HCM Average Control Delay	9.3	HCM Level of Service	A
HCM Volume to Capacity ratio	0.50		
Actuated Cycle Length (s)	57.3	Sum of lost time (s)	9.0
Intersection Capacity Utilization	53.6%	ICU Level of Service	A
Analysis Period (min)	15		

c Critical Lane Group

Movement	EBL	EBT	EBR	WBL	WBT	WBR	NBL	NBT	NBR	SBL	SBT	SBR
Lane Configurations												
Ideal Flow (vphpl)	1900	1900	1900	1900	1900	1900	1900	1900	1900	1900	1900	1900
Total Lost time (s)		4.0	4.0		4.0	4.0	4.0	4.0	4.0	4.0	4.0	4.0
Lane Util. Factor		1.00	1.00		1.00	1.00	1.00	0.95	1.00	1.00	0.95	1.00
Frt		1.00	0.85		1.00	0.85	1.00	1.00	0.85	1.00	1.00	0.85
Flt Protected		0.98	1.00		0.95	1.00	0.95	1.00	1.00	0.95	1.00	1.00
Satd. Flow (prot)		1779	1583		1770	1583	1770	3539	1583	1770	3539	1583
Flt Permitted		0.71	1.00		0.74	1.00	0.38	1.00	1.00	0.30	1.00	1.00
Satd. Flow (perm)		1323	1583		1370	1583	709	3539	1583	568	3539	1583
Volume (vph)	29	2	82	37	0	30	148	855	83	29	592	72
Peak-hour factor, PHF	0.95	0.95	0.95	0.95	0.95	0.95	0.95	0.95	0.95	0.95	0.95	0.95
Adj. Flow (vph)	31	2	86	39	0	32	156	900	87	31	623	76
RTOR Reduction (vph)	0	0	70	0	0	27	0	0	25	0	0	24
Lane Group Flow (vph)	0	33	16	0	39	5	156	900	62	31	623	52
Turn Type	Perm		pm+ov	Perm		pm+ov	pm+pt		Perm	pm+pt		Perm
Protected Phases		4	5		8	1	5	2		1	6	
Permitted Phases	4		4	8		8	2		2	6		6
Actuated Green, G (s)		4.9	10.9		4.9	7.9	67.1	61.1	61.1	61.1	58.1	58.1
Effective Green, g (s)		7.9	16.9		7.9	13.9	73.1	64.1	64.1	67.1	61.1	61.1
Actuated g/C Ratio		0.09	0.19		0.09	0.15	0.81	0.71	0.71	0.75	0.68	0.68
Clearance Time (s)		7.0	7.0		7.0	7.0	7.0	7.0	7.0	7.0	7.0	7.0
Vehicle Extension (s)		2.0	2.0		2.0	2.0	2.0	2.0	2.0	2.0	2.0	2.0
Lane Grp Cap (vph)		116	368		120	315	682	2521	1127	504	2403	1075
v/s Ratio Prot			0.00			0.00	c0.02	c0.25		0.00	0.18	
v/s Ratio Perm		0.02	0.01		c0.03	0.00	0.16		0.04	0.04		0.03
v/c Ratio		0.28	0.04		0.33	0.02	0.23	0.36	0.05	0.06	0.26	0.05
Uniform Delay, d1		38.4	29.9		38.5	32.3	1.9	5.0	3.9	3.0	5.6	4.8
Progression Factor		1.00	1.00		1.00	1.00	1.00	1.00	1.00	1.00	1.00	1.00
Incremental Delay, d2		0.5	0.0		0.6	0.0	0.1	0.4	0.1	0.0	0.3	0.1
Delay (s)		38.9	30.0		39.1	32.3	2.0	5.4	4.0	3.0	5.9	4.9
Level of Service		D	C		D	C	A	A	A	A	A	A
Approach Delay (s)		32.4			36.0			4.8			5.7	
Approach LOS		C			D			A			A	

Intersection Summary			
HCM Average Control Delay	7.8	HCM Level of Service	A
HCM Volume to Capacity ratio	0.35		
Actuated Cycle Length (s)	90.0	Sum of lost time (s)	12.0
Intersection Capacity Utilization	45.7%	ICU Level of Service	A
Analysis Period (min)	15		

c Critical Lane Group

Movement	EBL	EBT	EBR	WBL	WBT	WBR	NBL	NBT	NBR	SBL	SBT	SBR
Lane Configurations												
Ideal Flow (vphpl)	1900	1900	1900	1900	1900	1900	1900	1900	1900	1900	1900	1900
Total Lost time (s)	3.0	3.0	3.0	3.0	3.0	3.0	3.0	3.0	3.0	3.0	3.0	3.0
Lane Util. Factor	1.00	0.95	1.00	0.97	0.95	1.00	0.97	0.95	1.00	0.97	0.95	1.00
Frt	1.00	1.00	0.85	1.00	1.00	0.85	1.00	1.00	0.85	1.00	1.00	0.85
Flt Protected	0.95	1.00	1.00	0.95	1.00	1.00	0.95	1.00	1.00	0.95	1.00	1.00
Satd. Flow (prot)	1770	3539	1583	3433	3539	1583	3433	3539	1583	3433	3539	1583
Flt Permitted	0.95	1.00	1.00	0.95	1.00	1.00	0.95	1.00	1.00	0.95	1.00	1.00
Satd. Flow (perm)	1770	3539	1583	3433	3539	1583	3433	3539	1583	3433	3539	1583
Volume (vph)	205	454	220	191	704	306	334	902	146	164	876	390
Peak-hour factor, PHF	0.95	0.95	0.95	0.95	0.95	0.95	0.95	0.95	0.95	0.95	0.95	0.95
Adj. Flow (vph)	216	478	232	201	741	322	352	949	154	173	922	411
RTOR Reduction (vph)	0	0	0	0	0	0	0	0	0	0	0	0
Lane Group Flow (vph)	216	478	232	201	741	322	352	949	154	173	922	411
Turn Type	Prot		Free	Prot		Free	Prot		Free	Prot		Free
Protected Phases	7	4		3	8		5	2		1	6	
Permitted Phases			Free			Free			Free			Free
Actuated Green, G (s)	18.4	32.3	138.7	13.4	27.3	138.7	17.8	52.7	138.7	12.3	47.2	138.7
Effective Green, g (s)	22.4	36.3	138.7	17.4	31.3	138.7	21.8	56.7	138.7	16.3	51.2	138.7
Actuated g/C Ratio	0.16	0.26	1.00	0.13	0.23	1.00	0.16	0.41	1.00	0.12	0.37	1.00
Clearance Time (s)	7.0	7.0		7.0	7.0		7.0	7.0		7.0	7.0	
Vehicle Extension (s)	3.0	3.0		3.0	3.0		3.0	5.0		3.0	5.0	
Lane Grp Cap (vph)	286	926	1583	431	799	1583	540	1447	1583	403	1306	1583
v/s Ratio Prot	c0.12	0.14		0.06	c0.21		c0.10	0.27		0.05	c0.26	
v/s Ratio Perm			0.15			0.20			0.10			0.26
v/c Ratio	0.76	0.52	0.15	0.47	0.93	0.20	0.65	0.66	0.10	0.43	0.71	0.26
Uniform Delay, d1	55.5	43.7	0.0	56.3	52.6	0.0	54.9	33.1	0.0	56.9	37.3	0.0
Progression Factor	1.00	1.00	1.00	1.00	1.00	1.00	1.00	1.00	1.00	1.00	1.00	1.00
Incremental Delay, d2	10.8	0.5	0.2	0.8	16.6	0.3	2.8	1.5	0.1	0.7	2.2	0.4
Delay (s)	66.3	44.2	0.2	57.1	69.2	0.3	57.7	34.6	0.1	57.6	39.5	0.4
Level of Service	E	D	A	E	E	A	E	C	A	E	D	A
Approach Delay (s)		38.3			49.7			36.5			30.9	
Approach LOS		D			D			D			C	

Intersection Summary			
HCM Average Control Delay	38.5	HCM Level of Service	D
HCM Volume to Capacity ratio	0.76		
Actuated Cycle Length (s)	138.7	Sum of lost time (s)	12.0
Intersection Capacity Utilization	77.9%	ICU Level of Service	D
Analysis Period (min)	15		

c Critical Lane Group

Movement	EBL	EBR	NBL	NBT	SBT	SBR
Lane Configurations						
Ideal Flow (vphpl)	1900	1900	1900	1900	1900	1900
Total Lost time (s)	4.0			4.0	4.0	
Lane Util. Factor	0.97			0.95	0.95	
Frt	0.97			1.00	0.99	
Flt Protected	0.96			1.00	1.00	
Satd. Flow (prot)	3367			3534	3514	
Flt Permitted	0.96			0.66	1.00	
Satd. Flow (perm)	3367			2320	3514	
Volume (vph)	204	54	57	2013	2006	101
Peak-hour factor, PHF	0.95	0.95	0.95	0.95	0.95	0.95
Adj. Flow (vph)	215	57	60	2119	2112	106
RTOR Reduction (vph)	21	0	0	0	3	0
Lane Group Flow (vph)	251	0	0	2179	2215	0
Turn Type			Perm			
Protected Phases	4			2	6	
Permitted Phases			2			
Actuated Green, G (s)	14.0			92.0	92.0	
Effective Green, g (s)	17.0			95.0	95.0	
Actuated g/C Ratio	0.14			0.79	0.79	
Clearance Time (s)	7.0			7.0	7.0	
Vehicle Extension (s)	4.0			3.0	3.0	
Lane Grp Cap (vph)	477			1837	2782	
v/s Ratio Prot	c0.07				0.63	
v/s Ratio Perm				c0.94		
v/c Ratio	0.53			1.19	0.80	
Uniform Delay, d1	47.8			12.5	7.0	
Progression Factor	1.00			1.00	1.00	
Incremental Delay, d2	4.1			89.8	1.7	
Delay (s)	51.9			102.1	8.7	
Level of Service	D			F	A	
Approach Delay (s)	51.9			102.1	8.7	
Approach LOS	D			F	A	

Intersection Summary			
HCM Average Control Delay	54.8	HCM Level of Service	D
HCM Volume to Capacity ratio	1.09		
Actuated Cycle Length (s)	120.0	Sum of lost time (s)	8.0
Intersection Capacity Utilization	111.7%	ICU Level of Service	H
Analysis Period (min)	15		

c Critical Lane Group

Movement	EBL	EBT	EBR	WBL	WBT	WBR	NBL	NBT	NBR	SBL	SBT	SBR
Lane Configurations												
Ideal Flow (vphpl)	1900	1900	1900	1900	1900	1900	1900	1900	1900	1900	1900	1900
Total Lost time (s)	4.0	4.0	4.0	3.0	4.0	3.0	4.0	3.0	3.0	3.0	3.0	4.0
Lane Util. Factor	0.97	0.95	1.00	0.97	0.95	1.00	0.97	0.95	1.00	0.97	0.95	1.00
Frt	1.00	1.00	0.85	1.00	1.00	0.85	1.00	1.00	0.85	1.00	1.00	0.85
Flt Protected	0.95	1.00	1.00	0.95	1.00	1.00	0.95	1.00	1.00	0.95	1.00	1.00
Satd. Flow (prot)	3433	3539	1583	3433	3539	1583	3433	3539	1583	3433	3539	1583
Flt Permitted	0.95	1.00	1.00	0.95	1.00	1.00	0.95	1.00	1.00	0.95	1.00	1.00
Satd. Flow (perm)	3433	3539	1583	3433	3539	1583	3433	3539	1583	3433	3539	1583
Volume (vph)	458	763	433	223	643	93	1129	346	287	83	206	602
Peak-hour factor, PHF	0.95	0.95	0.95	0.95	0.95	0.95	0.95	0.95	0.95	0.95	0.95	0.95
Adj. Flow (vph)	482	803	456	235	677	98	1188	364	302	87	217	634
RTOR Reduction (vph)	0	0	0	0	0	0	0	0	35	0	0	0
Lane Group Flow (vph)	482	803	456	235	677	98	1188	364	267	87	217	634
Turn Type	Prot		Free	Prot		Free	Prot		pm+ov	Prot		Free
Protected Phases	1	6		5	2		7	4	5	3	8	
Permitted Phases			Free			Free			4			Free
Actuated Green, G (s)	12.5	21.0	100.0	8.1	16.6	100.0	36.0	39.4	47.5	4.0	7.4	100.0
Effective Green, g (s)	15.5	24.0	100.0	12.1	19.6	100.0	39.0	42.9	55.0	8.0	10.9	100.0
Actuated g/C Ratio	0.16	0.24	1.00	0.12	0.20	1.00	0.39	0.43	0.55	0.08	0.11	1.00
Clearance Time (s)	7.0	7.0		7.0	7.0		7.0	6.5	7.0	7.0	6.5	
Vehicle Extension (s)	2.5	4.0		2.5	4.0		2.5	2.5	2.5	2.5	2.5	
Lane Grp Cap (vph)	532	849	1583	415	694	1583	1339	1518	918	275	386	1583
v/s Ratio Prot	c0.14	c0.23		0.07	0.19		c0.35	0.10	0.04	0.03	c0.06	
v/s Ratio Perm			0.29			0.06			0.13			0.40
v/c Ratio	0.91	0.95	0.29	0.57	0.98	0.06	0.89	0.24	0.29	0.32	0.56	0.40
Uniform Delay, d1	41.5	37.4	0.0	41.5	40.0	0.0	28.4	18.2	12.1	43.4	42.3	0.0
Progression Factor	1.00	1.00	1.00	1.00	1.00	1.00	1.00	1.00	1.00	1.00	1.00	1.00
Incremental Delay, d2	18.9	20.2	0.5	1.4	28.7	0.1	7.4	0.1	0.1	0.5	1.5	0.8
Delay (s)	60.5	57.6	0.5	42.9	68.6	0.1	35.9	18.2	12.2	43.9	43.8	0.8
Level of Service	E	E	A	D	E	A	D	B	B	D	D	A
Approach Delay (s)		43.4			56.0			28.5			14.7	
Approach LOS		D			E			C			B	

Intersection Summary			
HCM Average Control Delay	35.9	HCM Level of Service	D
HCM Volume to Capacity ratio	0.85		
Actuated Cycle Length (s)	100.0	Sum of lost time (s)	11.0
Intersection Capacity Utilization	82.1%	ICU Level of Service	E
Analysis Period (min)	15		
c Critical Lane Group			

Movement	EBL	EBT	EBR	WBL	WBT	WBR	NBL	NBT	NBR	SBL	SBT	SBR
Lane Configurations												
Ideal Flow (vphpl)	1900	1900	1900	1900	1900	1900	1900	1900	1900	1900	1900	1900
Total Lost time (s)	3.0	3.0	3.0	3.0	3.0	3.0	3.0	3.0	3.0	3.0	3.0	3.0
Lane Util. Factor	0.97	1.00	1.00	0.97	1.00	1.00	0.97	0.95	1.00	1.00	0.95	1.00
Frt	1.00	1.00	0.85	1.00	1.00	0.85	1.00	1.00	0.85	1.00	1.00	0.85
Flt Protected	0.95	1.00	1.00	0.95	1.00	1.00	0.95	1.00	1.00	0.95	1.00	1.00
Satd. Flow (prot)	3433	1863	1583	3433	1863	1583	3433	3539	1583	1770	3539	1583
Flt Permitted	0.95	1.00	1.00	0.95	1.00	1.00	0.95	1.00	1.00	0.95	1.00	1.00
Satd. Flow (perm)	3433	1863	1583	3433	1863	1583	3433	3539	1583	1770	3539	1583
Volume (vph)	329	617	260	238	233	33	244	1406	298	4	1004	258
Peak-hour factor, PHF	0.95	0.95	0.95	0.95	0.95	0.95	0.95	0.95	0.95	0.95	0.95	0.95
Adj. Flow (vph)	346	649	274	251	245	35	257	1480	314	4	1057	272
RTOR Reduction (vph)	0	0	147	0	0	26	0	0	94	0	0	172
Lane Group Flow (vph)	346	649	127	251	245	9	257	1480	220	4	1057	100
Turn Type	Prot		Perm	Prot		Perm	Prot		Perm	Prot		Perm
Protected Phases	7	4		3	8		1	6		5	2	
Permitted Phases			4			8			6			2
Actuated Green, G (s)	18.8	36.0	36.0	15.1	32.3	32.3	11.8	56.6	56.6	1.9	46.7	46.7
Effective Green, g (s)	22.8	41.0	41.0	19.1	37.3	37.3	15.8	61.1	61.1	5.9	51.2	51.2
Actuated g/C Ratio	0.16	0.29	0.29	0.14	0.27	0.27	0.11	0.44	0.44	0.04	0.37	0.37
Clearance Time (s)	7.0	8.0	8.0	7.0	8.0	8.0	7.0	7.5	7.5	7.0	7.5	7.5
Vehicle Extension (s)	3.0	3.0	3.0	3.0	3.0	3.0	3.0	3.0	3.0	3.0	3.0	3.0
Lane Grp Cap (vph)	563	549	467	471	500	424	390	1555	695	75	1303	583
v/s Ratio Prot	c0.10	c0.35		0.07	0.13		c0.07	c0.42		0.00	0.30	
v/s Ratio Perm			0.08			0.01			0.14			0.06
v/c Ratio	0.61	1.18	0.27	0.53	0.49	0.02	0.86	0.95	0.32	0.05	0.81	0.17
Uniform Delay, d1	54.1	49.0	37.6	55.8	42.9	37.5	59.1	37.6	25.4	63.9	39.6	29.6
Progression Factor	1.00	1.00	1.00	1.00	1.00	1.00	1.00	1.00	1.00	1.00	1.00	1.00
Incremental Delay, d2	2.0	99.5	0.3	1.2	0.8	0.0	4.0	13.1	0.3	0.3	3.9	0.1
Delay (s)	58.1	148.5	37.9	57.0	43.6	37.5	63.1	50.7	25.7	64.2	43.5	29.8
Level of Service	E	F	D	E	D	D	E	D	C	E	D	C
Approach Delay (s)		99.4			49.6			48.4			40.8	
Approach LOS		F			D			D			D	

Intersection Summary			
HCM Average Control Delay	59.1	HCM Level of Service	E
HCM Volume to Capacity ratio	0.95		
Actuated Cycle Length (s)	139.1	Sum of lost time (s)	9.0
Intersection Capacity Utilization	101.3%	ICU Level of Service	G
Analysis Period (min)	15		
c Critical Lane Group			

Movement	EBL	EBR	NBL	NBT	SBT	SBR
Lane Configurations						
Ideal Flow (vphpl)	1900	1900	1900	1900	1900	1900
Total Lost time (s)	3.0	3.0	3.0	3.0	3.0	3.0
Lane Util. Factor	1.00	1.00	1.00	0.95	0.95	1.00
Frt	1.00	0.85	1.00	1.00	1.00	0.85
Flt Protected	0.95	1.00	0.95	1.00	1.00	1.00
Satd. Flow (prot)	1770	1583	1770	3539	3539	1583
Flt Permitted	0.95	1.00	0.07	1.00	1.00	1.00
Satd. Flow (perm)	1770	1583	138	3539	3539	1583
Volume (vph)	211	183	249	1742	1322	116
Peak-hour factor, PHF	0.95	0.95	0.95	0.95	0.95	0.95
Adj. Flow (vph)	222	193	262	1834	1392	122
RTOR Reduction (vph)	0	151	0	0	0	35
Lane Group Flow (vph)	222	42	262	1834	1392	87
Turn Type		Perm	pm+pt			pm+ov
Protected Phases	4		1	6	2	4
Permitted Phases		4	6			2
Actuated Green, G (s)	18.2	18.2	70.8	70.8	47.5	65.7
Effective Green, g (s)	22.2	22.2	74.3	74.3	51.0	73.2
Actuated g/C Ratio	0.22	0.22	0.72	0.72	0.50	0.71
Clearance Time (s)	7.0	7.0	7.0	6.5	6.5	7.0
Vehicle Extension (s)	3.0	3.0	4.0	4.0	4.0	3.0
Lane Grp Cap (vph)	383	343	420	2565	1761	1177
v/s Ratio Prot	c0.13		0.12	c0.52	c0.39	0.02
v/s Ratio Perm		0.03	0.33			0.04
v/c Ratio	0.58	0.12	0.62	0.72	0.79	0.07
Uniform Delay, d1	36.0	32.3	25.0	8.1	21.3	4.4
Progression Factor	1.00	1.00	1.00	1.00	1.00	1.00
Incremental Delay, d2	2.1	0.2	3.1	1.0	2.6	0.0
Delay (s)	38.1	32.5	28.1	9.1	24.0	4.4
Level of Service	D	C	C	A	C	A
Approach Delay (s)	35.5			11.5	22.4	
Approach LOS	D			B	C	

Intersection Summary			
HCM Average Control Delay	18.1	HCM Level of Service	B
HCM Volume to Capacity ratio	0.73		
Actuated Cycle Length (s)	102.5	Sum of lost time (s)	9.0
Intersection Capacity Utilization	72.0%	ICU Level of Service	C
Analysis Period (min)	15		
c Critical Lane Group			

Movement	EBL	EBT	EBR	WBL	WBT	WBR	NBL	NBT	NBR	SBL	SBT	SBR
Lane Configurations												
Ideal Flow (vphpl)	1900	1900	1900	1900	1900	1900	1900	1900	1900	1900	1900	1900
Lane Width	12	12	12	12	12	13	12	12	12	12	12	12
Total Lost time (s)	3.0	3.0	3.0	3.0	3.0	3.0	3.0	3.0	3.0	3.0	3.0	3.0
Lane Util. Factor	0.97	0.91	1.00	0.97	0.86	1.00	0.97	0.95	1.00	0.97	0.95	1.00
Frt	1.00	1.00	0.85	1.00	1.00	0.85	1.00	1.00	0.85	1.00	1.00	0.85
Flt Protected	0.95	1.00	1.00	0.95	1.00	1.00	0.95	1.00	1.00	0.95	1.00	1.00
Satd. Flow (prot)	3433	5085	1583	3433	6408	1636	3433	3539	1583	3433	3539	1583
Flt Permitted	0.95	1.00	1.00	0.95	1.00	1.00	0.95	1.00	1.00	0.95	1.00	1.00
Satd. Flow (perm)	3433	5085	1583	3433	6408	1636	3433	3539	1583	3433	3539	1583
Volume (vph)	245	1160	194	216	2758	1205	127	549	106	762	394	231
Peak-hour factor, PHF	0.95	0.95	0.95	0.95	0.95	0.95	0.95	0.95	0.95	0.95	0.95	0.95
Adj. Flow (vph)	258	1221	204	227	2903	1268	134	578	112	802	415	243
RTOR Reduction (vph)	0	0	0	0	0	0	0	0	11	0	0	5
Lane Group Flow (vph)	258	1221	204	227	2903	1268	134	578	101	802	415	238
Turn Type	Prot		Free	Prot		Free	Prot		pm+ov	Prot		pm+ov
Protected Phases	1	6		5	2		3	8	5	7	4	1
Permitted Phases			Free			Free			8			4
Actuated Green, G (s)	8.4	38.0	130.0	10.4	38.0	130.0	5.0	23.4	33.8	32.7	51.1	59.5
Effective Green, g (s)	12.4	40.0	130.0	14.4	42.0	130.0	9.0	26.9	41.3	36.7	54.6	67.0
Actuated g/C Ratio	0.10	0.31	1.00	0.11	0.32	1.00	0.07	0.21	0.32	0.28	0.42	0.52
Clearance Time (s)	7.0	7.0		7.0	7.0		7.0	6.5	7.0	7.0	6.5	7.0
Vehicle Extension (s)	2.0	3.0		2.0	3.0		2.0	2.0	2.0	2.0	2.0	2.0
Lane Grp Cap (vph)	327	1565	1583	380	2070	1636	238	732	539	969	1486	852
v/s Ratio Prot	0.08	0.24		0.07	c0.45		0.04	0.16	0.02	c0.23	0.12	0.03
v/s Ratio Perm			0.13			c0.78			0.04			0.12
v/c Ratio	0.79	0.78	0.13	0.60	1.40	0.78	0.56	0.79	0.19	0.83	0.28	0.28
Uniform Delay, d1	57.5	41.0	0.0	55.0	44.0	0.0	58.6	48.9	32.2	43.7	24.8	17.8
Progression Factor	1.00	1.00	1.00	1.11	1.13	1.00	1.00	1.00	1.00	1.00	1.00	1.00
Incremental Delay, d2	11.1	3.9	0.2	0.2	181.4	0.3	1.8	5.2	0.1	5.6	0.0	0.1
Delay (s)	68.6	44.9	0.2	61.2	231.2	0.3	60.4	54.1	32.2	49.3	24.8	17.9
Level of Service	E	D	A	E	F	A	E	D	C	D	C	B
Approach Delay (s)		43.1			155.9			52.2			37.1	
Approach LOS		D			F			D			D	

Intersection Summary			
HCM Average Control Delay	102.3	HCM Level of Service	F
HCM Volume to Capacity ratio	0.98		
Actuated Cycle Length (s)	130.0	Sum of lost time (s)	0.0
Intersection Capacity Utilization	97.2%	ICU Level of Service	F
Analysis Period (min)	15		
c Critical Lane Group			

Movement	EBL	EBT	EBR	WBL	WBT	WBR	NBL	NBT	NBR	SBL	SBT	SBR
Lane Configurations												
Ideal Flow (vphpl)	1900	1900	1900	1900	1900	1900	1900	1900	1900	1900	1900	1900
Total Lost time (s)	3.0	3.0	3.0	3.0	3.0	3.0	3.0	3.0	3.0	3.0	3.0	
Lane Util. Factor	1.00	0.91	1.00	1.00	0.91	1.00	1.00	0.95	1.00	1.00	0.95	
Frt	1.00	1.00	0.85	1.00	1.00	0.85	1.00	1.00	0.85	1.00	0.90	
Flt Protected	0.95	1.00	1.00	0.95	1.00	1.00	0.95	1.00	1.00	0.95	1.00	
Satd. Flow (prot)	1770	5085	1583	1770	5085	1583	1770	3539	1583	1770	3170	
Flt Permitted	0.95	1.00	1.00	0.95	1.00	1.00	0.78	1.00	1.00	0.49	1.00	
Satd. Flow (perm)	1770	5085	1583	1770	5085	1583	1461	3539	1583	920	3170	
Volume (vph)	27	1982	92	581	3625	159	145	33	484	290	65	147
Peak-hour factor, PHF	0.95	0.95	0.95	0.95	0.95	0.95	0.95	0.95	0.95	0.95	0.95	0.95
Adj. Flow (vph)	28	2086	97	612	3816	167	153	35	509	305	68	155
RTOR Reduction (vph)	0	0	50	0	0	33	0	0	0	0	111	0
Lane Group Flow (vph)	28	2086	47	612	3816	134	153	35	509	305	112	0
Turn Type	Prot		pm+ov	Prot		pm+ov	pm+pt		Free	pm+pt		
Protected Phases	1	6	3	5	2	7	3	8		7	4	
Permitted Phases			6			2	8		Free	4		
Actuated Green, G (s)	4.7	50.2	55.7	33.0	78.5	96.7	7.1	1.6	130.0	26.8	14.3	
Effective Green, g (s)	8.7	53.7	63.2	37.0	82.0	104.2	14.6	5.1	130.0	30.3	17.8	
Actuated g/C Ratio	0.07	0.41	0.49	0.28	0.63	0.80	0.11	0.04	1.00	0.23	0.14	
Clearance Time (s)	7.0	6.5	7.0	7.0	6.5	7.0	7.0	6.5		7.0	6.5	
Vehicle Extension (s)	2.0	3.0	2.0	2.0	3.0	2.0	2.0	2.0		2.0	2.0	
Lane Grp Cap (vph)	118	2100	806	504	3207	1305	187	139	1583	360	434	
v/s Ratio Prot	0.02	0.41	0.00	c0.35	c0.75	0.02	0.06	0.01		c0.14	0.04	
v/s Ratio Perm			0.03			0.07	0.03		0.32	c0.05		
v/c Ratio	0.24	0.99	0.06	1.21	1.19	0.10	0.82	0.25	0.32	0.85	0.26	
Uniform Delay, d1	57.5	36.0	17.7	46.5	24.0	2.8	56.1	60.6	0.0	46.2	50.2	
Progression Factor	0.97	1.33	4.23	1.00	1.00	1.00	1.00	1.00	1.00	1.00	1.00	
Incremental Delay, d2	0.2	14.4	0.0	113.6	88.8	0.2	22.4	0.3	0.5	21.2	1.4	
Delay (s)	56.3	64.8	74.8	160.1	112.8	2.9	78.5	60.9	0.5	67.4	51.6	
Level of Service	E	E	E	F	F	A	E	E	A	E	D	
Approach Delay (s)		65.1			115.1			20.7			60.8	
Approach LOS		E			F			C			E	

Intersection Summary			
HCM Average Control Delay	89.6	HCM Level of Service	F
HCM Volume to Capacity ratio	1.11		
Actuated Cycle Length (s)	130.0	Sum of lost time (s)	6.0
Intersection Capacity Utilization	111.1%	ICU Level of Service	H
Analysis Period (min)	15		

c Critical Lane Group

Movement	EBL	EBT	EBR	WBL	WBT	WBR	NBL	NBT	NBR	SBL	SBT	SBR
Lane Configurations												
Ideal Flow (vphpl)	1900	1900	1900	1900	1900	1900	1900	1900	1900	1900	1900	1900
Total Lost time (s)	3.0	3.0	3.0	3.0	3.0	3.0	3.0	3.0	3.0	3.0	3.0	3.0
Lane Util. Factor	0.94	0.86	1.00	0.97	0.86	1.00	0.97	0.95	1.00	0.97	0.95	1.00
Frt	1.00	1.00	0.85	1.00	1.00	0.85	1.00	1.00	0.85	1.00	1.00	0.85
Flt Protected	0.95	1.00	1.00	0.95	1.00	1.00	0.95	1.00	1.00	0.95	1.00	1.00
Satd. Flow (prot)	4990	6408	1583	3433	6408	1583	3433	3539	1583	3433	3539	1583
Flt Permitted	0.95	1.00	1.00	0.95	1.00	1.00	0.95	1.00	1.00	0.95	1.00	1.00
Satd. Flow (perm)	4990	6408	1583	3433	6408	1583	3433	3539	1583	3433	3539	1583
Volume (vph)	760	3401	258	102	5003	358	402	152	675	449	269	1768
Peak-hour factor, PHF	0.95	0.95	0.95	0.95	0.95	0.95	0.95	0.95	0.95	0.95	0.95	0.95
Adj. Flow (vph)	800	3580	272	107	5266	377	423	160	711	473	283	1861
RTOR Reduction (vph)	0	0	0	0	0	0	0	0	0	0	0	0
Lane Group Flow (vph)	800	3580	272	107	5266	377	423	160	711	473	283	1861
Turn Type	Prot		Free	Prot		Free	Prot		Free	Prot		Free
Protected Phases	1	6		5	2		7	4		3	8	
Permitted Phases			Free			Free			Free			Free
Actuated Green, G (s)	18.0	94.5	145.0	5.5	82.0	145.0	12.0	5.0	145.0	12.0	5.0	145.0
Effective Green, g (s)	22.0	98.5	145.0	9.5	86.0	145.0	16.0	9.0	145.0	16.0	9.0	145.0
Actuated g/C Ratio	0.15	0.68	1.00	0.07	0.59	1.00	0.11	0.06	1.00	0.11	0.06	1.00
Clearance Time (s)	7.0	7.0		7.0	7.0		7.0	7.0		7.0	7.0	
Vehicle Extension (s)	2.0	3.0		2.0	3.0		3.0	3.0		3.0	3.0	
Lane Grp Cap (vph)	757	4353	1583	225	3801	1583	379	220	1583	379	220	1583
v/s Ratio Prot	0.16	0.56		0.03	c0.82		0.12	0.05		0.14	0.08	
v/s Ratio Perm			0.17			0.24			0.45			c1.18
v/c Ratio	1.06	0.82	0.17	0.48	1.39	0.24	1.12	0.73	0.45	1.25	1.29	1.18
Uniform Delay, d1	61.5	16.9	0.0	65.3	29.5	0.0	64.5	66.8	0.0	64.5	68.0	72.5
Progression Factor	1.00	1.00	1.00	1.00	1.00	1.00	1.00	1.00	1.00	1.00	1.00	1.00
Incremental Delay, d2	48.8	1.9	0.2	0.6	175.1	0.4	81.5	11.3	0.9	131.8	158.7	86.0
Delay (s)	110.3	18.8	0.2	85.9	204.6	0.4	146.0	78.1	0.9	196.3	226.7	158.5
Level of Service	F	B	A	E	F	A	F	E	A	F	F	F
Approach Delay (s)		33.4			188.7			57.9			172.7	
Approach LOS		C			F			E			F	

Intersection Summary			
HCM Average Control Delay	123.5	HCM Level of Service	F
HCM Volume to Capacity ratio	1.30		
Actuated Cycle Length (s)	145.0	Sum of lost time (s)	3.0
Intersection Capacity Utilization	119.2%	ICU Level of Service	H
Analysis Period (min)	15		

c Critical Lane Group

Movement	EBL	EBT	EBR	WBL	WBT	WBR	NBL	NBT	NBR	SBL	SBT	SBR
Lane Configurations												
Ideal Flow (vphpl)	1900	1900	1900	1900	1900	1900	1900	1900	1900	1900	1900	1900
Total Lost time (s)		3.0		3.0	3.0			3.0	3.0		3.0	
Lane Util. Factor		0.95		1.00	0.95			1.00	1.00		1.00	
Frt		0.99		1.00	1.00			1.00	0.85		0.94	
Flt Protected		1.00		0.95	1.00			0.95	1.00		0.98	
Satd. Flow (prot)		3506		1770	3539			1775	1583		1724	
Flt Permitted		0.92		0.06	1.00			0.72	1.00		0.89	
Satd. Flow (perm)		3233		105	3539			1334	1583		1561	
Volume (vph)	25	1955	125	165	1196	0	180	2	262	7	3	7
Peak-hour factor, PHF	0.95	0.95	0.95	0.95	0.95	0.95	0.95	0.95	0.95	0.95	0.95	0.95
Adj. Flow (vph)	26	2058	132	174	1259	0	189	2	276	7	3	7
RTOR Reduction (vph)	0	4	0	0	0	0	0	0	0	0	6	0
Lane Group Flow (vph)	0	2212	0	174	1259	0	0	191	276	0	11	0
Turn Type	Perm			pm+pt			Perm		pm+ov	Perm		
Protected Phases		6		5	2			4	5		8	
Permitted Phases	6			2			4		4	8		
Actuated Green, G (s)		65.1		76.1	76.1			18.5	24.0		18.5	
Effective Green, g (s)		68.1		79.1	79.1			21.5	29.5		21.5	
Actuated g/C Ratio		0.64		0.74	0.74			0.20	0.28		0.20	
Clearance Time (s)		6.0		5.5	6.0			6.0	5.5		6.0	
Vehicle Extension (s)		4.0		2.0	4.0			3.0	2.0		3.0	
Lane Grp Cap (vph)		2065		203	2626			269	483		315	
v/s Ratio Prot				c0.06	0.36				0.04			
v/s Ratio Perm		c0.68		0.57				c0.14	0.13		0.01	
v/c Ratio		1.07		0.86	0.48			0.71	0.57		0.04	
Uniform Delay, d1		19.2		36.1	5.5			39.6	33.1		34.2	
Progression Factor		1.00		1.00	1.00			1.00	1.00		1.00	
Incremental Delay, d2		42.0		27.3	0.2			8.5	1.0		0.0	
Delay (s)		61.3		63.4	5.7			48.2	34.1		34.3	
Level of Service		E		E	A			D	C		C	
Approach Delay (s)		61.3			12.7			39.9			34.3	
Approach LOS		E			B			D			C	

Intersection Summary			
HCM Average Control Delay	41.9	HCM Level of Service	D
HCM Volume to Capacity ratio	0.97		
Actuated Cycle Length (s)	106.6	Sum of lost time (s)	9.0
Intersection Capacity Utilization	118.6%	ICU Level of Service	H
Analysis Period (min)	15		
c Critical Lane Group			

Movement	EBL	EBT	WBT	WBR	SBL	SBR
Lane Configurations						
Ideal Flow (vphpl)	1900	1900	1900	1900	1900	1900
Total Lost time (s)	3.0	3.0	3.0	3.0	3.0	3.0
Lane Util. Factor	0.97	0.95	0.91	0.91	0.97	1.00
Frt	1.00	1.00	0.98	0.85	1.00	0.85
Flt Protected	0.95	1.00	1.00	1.00	0.95	1.00
Satd. Flow (prot)	3433	3539	3311	1441	3433	1583
Flt Permitted	0.95	1.00	1.00	1.00	0.95	1.00
Satd. Flow (perm)	3433	3539	3311	1441	3433	1583
Volume (vph)	1251	744	632	863	717	825
Peak-hour factor, PHF	0.95	0.95	0.95	0.95	0.95	0.95
Adj. Flow (vph)	1317	783	665	908	755	868
RTOR Reduction (vph)	0	0	14	4	0	482
Lane Group Flow (vph)	1317	783	774	781	755	386
Turn Type	Prot			pm+ov		Perm
Protected Phases	5	2	6	4	4	
Permitted Phases				6		4
Actuated Green, G (s)	33.0	60.0	20.0	45.5	25.5	25.5
Effective Green, g (s)	37.0	64.0	24.0	54.0	30.0	30.0
Actuated g/C Ratio	0.37	0.64	0.24	0.54	0.30	0.30
Clearance Time (s)	7.0	7.0	7.0	7.5	7.5	7.5
Vehicle Extension (s)	2.0	3.0	3.0	3.0	3.0	3.0
Lane Grp Cap (vph)	1270	2265	795	821	1030	475
v/s Ratio Prot	c0.38	0.22	c0.23	c0.29	0.22	
v/s Ratio Perm				0.26		0.24
v/c Ratio	1.04	0.35	0.97	0.95	0.73	0.81
Uniform Delay, d1	31.5	8.3	37.7	21.8	31.4	32.4
Progression Factor	1.00	1.00	1.00	1.00	1.00	1.00
Incremental Delay, d2	35.4	0.1	25.2	20.5	2.7	10.2
Delay (s)	66.9	8.4	82.9	42.2	34.1	42.6
Level of Service	E	A	E	D	C	D
Approach Delay (s)		45.1	52.6		38.6	
Approach LOS		D	D		D	

Intersection Summary			
HCM Average Control Delay	45.3	HCM Level of Service	D
HCM Volume to Capacity ratio	0.99		
Actuated Cycle Length (s)	100.0	Sum of lost time (s)	6.0
Intersection Capacity Utilization	92.8%	ICU Level of Service	F
Analysis Period (min)	15		
c Critical Lane Group			

HCM Signalized Intersection Capacity Analysis
24: Pacific Blvd & Loudoun County Parkway

Kincora
Future Background 2025

Movement	EBL	EBT	EBR	WBL	WBT	WBR	NBL	NBT	NBR	SBL	SBT	SBR
Lane Configurations												
Ideal Flow (vphpl)	1900	1900	1900	1900	1900	1900	1900	1900	1900	1900	1900	1900
Total Lost time (s)	4.0		4.0	4.0		4.0	4.0	4.0	4.0	4.0	4.0	4.0
Lane Util. Factor	0.97		1.00	1.00		1.00	1.00	0.95	1.00	1.00	0.95	1.00
Frt	1.00		0.85	1.00		0.85	1.00	1.00	0.85	1.00	1.00	0.85
Flt Protected	0.95		1.00	0.95		1.00	0.95	1.00	1.00	0.95	1.00	1.00
Satd. Flow (prot)	3433		1583	1770		1583	1770	3539	1583	1770	3539	1583
Flt Permitted	0.95		1.00	0.95		1.00	0.08	1.00	1.00	0.05	1.00	1.00
Satd. Flow (perm)	3433		1583	1770		1583	151	3539	1583	99	3539	1583
Volume (vph)	354	0	629	98	0	1567	343	1655	20	574	1477	213
Peak-hour factor, PHF	0.95	0.95	0.95	0.95	0.95	0.95	0.95	0.95	0.95	0.95	0.95	0.95
Adj. Flow (vph)	373	0	662	103	0	1649	361	1742	21	604	1555	224
RTOR Reduction (vph)	0	0	0	0	0	0	0	0	5	0	0	60
Lane Group Flow (vph)	373	0	662	103	0	1649	361	1742	16	604	1555	164
Turn Type	Prot		Free	Prot		Free	pm+pt		pm+ov	pm+pt		pm+ov
Protected Phases	7	4		3	8		5	2	3	1	6	7
Permitted Phases			Free			Free	2		2	6		6
Actuated Green, G (s)	17.8		129.8	17.8		129.8	88.0	68.0	85.8	98.0	73.0	90.8
Effective Green, g (s)	18.8		129.8	18.8		129.8	94.0	71.0	89.8	103.0	76.0	94.8
Actuated g/C Ratio	0.14		1.00	0.14		1.00	0.72	0.55	0.69	0.79	0.59	0.73
Clearance Time (s)	5.0			5.0			7.0	7.0	5.0	7.0	7.0	5.0
Vehicle Extension (s)	2.0			2.0			2.0	3.0	2.0	2.0	3.0	2.0
Lane Grp Cap (vph)	497		1583	256		1583	396	1936	1144	439	2072	1205
v/s Ratio Prot	0.11			0.06			0.16	0.49	0.00	c0.30	0.44	0.02
v/s Ratio Perm			0.42			c1.04	0.50		0.01	c0.79		0.08
v/c Ratio	0.75		0.42	0.40		1.04	0.91	0.90	0.01	1.38	0.75	0.14
Uniform Delay, d1	53.2		0.0	50.4		64.9	37.6	26.2	6.2	44.6	19.9	5.2
Progression Factor	1.00		1.00	1.00		1.00	1.00	1.00	1.00	1.00	1.00	1.00
Incremental Delay, d2	5.6		0.8	0.4		34.3	24.4	6.1	0.0	183.0	1.6	0.0
Delay (s)	58.9		0.8	50.8		99.2	61.9	32.3	6.2	227.7	21.5	5.3
Level of Service	E		A	D		F	E	C	A	F	C	A
Approach Delay (s)		21.7			96.4			37.1			72.2	
Approach LOS		C			F			D			E	

Intersection Summary

HCM Average Control Delay	60.6	HCM Level of Service	E
HCM Volume to Capacity ratio	1.30		
Actuated Cycle Length (s)	129.8	Sum of lost time (s)	4.0
Intersection Capacity Utilization	104.3%	ICU Level of Service	G
Analysis Period (min)	15		

c Critical Lane Group

HCM Unsignalized Intersection Capacity Analysis
25: Russel Branch Pkwy & Richfield Way

Kincora
Future Background 2025

Movement	EBL	EBT	EBR	WBL	WBT	WBR	NBL	NBT	NBR	SBL	SBT	SBR
Lane Configurations												
Sign Control		Free			Free			Stop			Stop	
Grade		0%			0%			0%			0%	
Volume (veh/h)	0	310	0	0	515	0	0	0	0	0	0	0
Peak Hour Factor	0.92	0.92	0.92	0.92	0.92	0.92	0.92	0.92	0.92	0.92	0.92	0.92
Hourly flow rate (vph)	0	337	0	0	560	0	0	0	0	0	0	0
Pedestrians												
Lane Width (ft)												
Walking Speed (ft/s)												
Percent Blockage												
Right turn flare (veh)												
Median type								None			None	
Median storage veh)												
Upstream signal (ft)												
pX, platoon unblocked												
vC, conflicting volume	560			337			617	897	168	728	897	280
vC1, stage 1 conf vol												
vC2, stage 2 conf vol												
vCu, unblocked vol	560			337			617	897	168	728	897	280
tC, single (s)	4.1			4.1			7.5	6.5	6.9	7.5	6.5	6.9
tC, 2 stage (s)												
tF (s)	2.2			2.2			3.5	4.0	3.3	3.5	4.0	3.3
p0 queue free %	100			100			100	100	100	100	100	100
cM capacity (veh/h)	1007			1219			374	278	846	311	278	717

Direction, Lane #	EB 1	EB 2	EB 3	EB 4	WB 1	WB 2	WB 3	WB 4	NB 1	NB 2	SB 1	SB 2
Volume Total	0	168	168	0	0	280	280	0	0	0	0	0
Volume Left	0	0	0	0	0	0	0	0	0	0	0	0
Volume Right	0	0	0	0	0	0	0	0	0	0	0	0
cSH	1700	1700	1700	1700	1700	1700	1700	1700	1700	1700	1700	1700
Volume to Capacity	0.00	0.10	0.10	0.00	0.00	0.16	0.16	0.00	0.00	0.00	0.00	0.00
Queue Length 95th (ft)	0	0	0	0	0	0	0	0	0	0	0	0
Control Delay (s)	0.0	0.0	0.0	0.0	0.0	0.0	0.0	0.0	0.0	0.0	0.0	0.0
Lane LOS									A	A	A	A
Approach Delay (s)	0.0				0.0				0.0		0.0	
Approach LOS									A		A	

Intersection Summary

Average Delay	0.0		
Intersection Capacity Utilization	17.6%	ICU Level of Service	A
Analysis Period (min)	15		

Movement	EBL	EBT	WBT	WBR	SWL	SWR
Lane Configurations		↑↑	↑↑			↑↑
Sign Control		Free	Free		Stop	
Grade		0%	0%		0%	
Volume (veh/h)	0	0	0	0	0	0
Peak Hour Factor	0.95	0.95	0.95	0.95	0.95	0.95
Hourly flow rate (vph)	0	0	0	0	0	0
Pedestrians						
Lane Width (ft)						
Walking Speed (ft/s)						
Percent Blockage						
Right turn flare (veh)						
Median type					None	
Median storage veh)						
Upstream signal (ft)						
pX, platoon unblocked						
vC, conflicting volume	0				0	0
vC1, stage 1 conf vol						
vC2, stage 2 conf vol						
vCu, unblocked vol	0				0	0
tC, single (s)	4.1				6.8	6.9
tC, 2 stage (s)						
tF (s)	2.2				3.5	3.3
p0 queue free %	100				100	100
cM capacity (veh/h)	1622				1023	1084

Direction, Lane #	EB 1	EB 2	WB 1	WB 2	SW 1	SW 2
Volume Total	0	0	0	0	0	0
Volume Left	0	0	0	0	0	0
Volume Right	0	0	0	0	0	0
cSH	1700	1700	1700	1700	1700	1700
Volume to Capacity	0.00	0.00	0.00	0.00	0.00	0.00
Queue Length 95th (ft)	0	0	0	0	0	0
Control Delay (s)	0.0	0.0	0.0	0.0	0.0	0.0
Lane LOS					A	A
Approach Delay (s)	0.0		0.0		0.0	
Approach LOS					A	

Intersection Summary			
Average Delay	0.0		
Intersection Capacity Utilization	0.0%	ICU Level of Service	A
Analysis Period (min)	15		

Movement	EBL	EBR	NBL	NBT	SBT	SBR
Lane Configurations						
Ideal Flow (vphpl)	1900	1900	1900	1900	1900	1900
Total Lost time (s)	4.0		4.0	4.0	4.0	
Lane Util. Factor	0.97		1.00	0.95	0.95	
Frt	0.99		1.00	1.00	0.99	
Flt Protected	0.95		0.95	1.00	1.00	
Satd. Flow (prot)	3427		1770	3539	3506	
Flt Permitted	0.95		0.95	1.00	1.00	
Satd. Flow (perm)	3427		1770	3539	3506	
Volume (vph)	106	5	11	1164	1118	74
Peak-hour factor, PHF	0.95	0.95	0.95	0.95	0.95	0.95
Adj. Flow (vph)	112	5	12	1225	1177	78
RTOR Reduction (vph)	3	0	0	0	5	0
Lane Group Flow (vph)	114	0	12	1225	1250	0
Turn Type			Prot			
Protected Phases	4		5	2	6	
Permitted Phases						
Actuated Green, G (s)	9.4		1.1	51.8	43.7	
Effective Green, g (s)	12.4		4.1	54.8	46.7	
Actuated g/C Ratio	0.16		0.05	0.73	0.62	
Clearance Time (s)	7.0		7.0	7.0	7.0	
Vehicle Extension (s)	4.0		2.0	3.0	3.0	
Lane Grp Cap (vph)	565		97	2579	2177	
v/s Ratio Prot	c0.03		0.01	c0.35	c0.36	
v/s Ratio Perm						
v/c Ratio	0.20		0.12	0.47	0.57	
Uniform Delay, d1	27.1		33.8	4.2	8.4	
Progression Factor	1.00		1.00	1.00	1.00	
Incremental Delay, d2	0.2		0.2	0.1	0.4	
Delay (s)	27.4		34.0	4.4	8.8	
Level of Service	C		C	A	A	
Approach Delay (s)	27.4			4.7	8.8	
Approach LOS	C			A	A	

Intersection Summary			
HCM Average Control Delay	7.7	HCM Level of Service	A
HCM Volume to Capacity ratio	0.51		
Actuated Cycle Length (s)	75.2	Sum of lost time (s)	12.0
Intersection Capacity Utilization	48.3%	ICU Level of Service	A
Analysis Period (min)	15		

c Critical Lane Group

Movement	EBL	EBT	EBR	WBL	WBT	WBR	NBL	NBT	NBR	SBL	SBT	SBR
Lane Configurations												
Ideal Flow (vphpl)	1900	1900	1900	1900	1900	1900	1900	1900	1900	1900	1900	1900
Total Lost time (s)	3.0	3.0	3.0	3.0	3.0	3.0	3.0	3.0	3.0	3.0	3.0	3.0
Lane Util. Factor	0.94	0.88	1.00	0.97	0.86	1.00	0.97	0.95	1.00	0.97	0.95	1.00
Frt	1.00	1.00	0.85	1.00	1.00	0.85	1.00	1.00	0.85	1.00	1.00	0.85
Flt Protected	0.95	1.00	1.00	0.95	1.00	1.00	0.95	1.00	1.00	0.95	1.00	1.00
Satd. Flow (prot)	4990	6408	1583	3433	6408	1583	3433	3539	1583	3433	3539	1583
Flt Permitted	0.95	1.00	1.00	0.95	1.00	1.00	0.95	1.00	1.00	0.95	1.00	1.00
Satd. Flow (perm)	4990	6408	1583	3433	6408	1583	3433	3539	1583	3433	3539	1583
Volume (vph)	451	2261	129	25	1820	847	144	49	46	673	41	601
Peak-hour factor, PHF	0.95	0.95	0.95	0.95	0.95	0.95	0.95	0.95	0.95	0.95	0.95	0.95
Adj. Flow (vph)	475	2380	136	26	1916	892	152	52	48	708	43	633
RTOR Reduction (vph)	0	0	0	0	0	0	0	0	0	0	0	0
Lane Group Flow (vph)	475	2380	136	26	1916	892	152	52	48	708	43	633
Turn Type	Prot		Free	Prot		Free	Prot		Free	Prot		Free
Protected Phases	1	6		5	2		7	4		3	8	
Permitted Phases			Free			Free			Free			Free
Actuated Green, G (s)	17.0	72.7	145.0	3.7	59.4	145.0	13.4	6.2	145.0	34.4	27.2	145.0
Effective Green, g (s)	21.0	76.7	145.0	7.7	63.4	145.0	17.4	10.2	145.0	38.4	31.2	145.0
Actuated g/C Ratio	0.14	0.53	1.00	0.05	0.44	1.00	0.12	0.07	1.00	0.26	0.22	1.00
Clearance Time (s)	7.0	7.0		7.0	7.0		7.0	7.0		7.0	7.0	
Vehicle Extension (s)	2.0	3.0		2.0	3.0		3.0	3.0		3.0	3.0	
Lane Grp Cap (vph)	723	3390	1583	182	2802	1583	412	249	1583	909	761	1583
v/s Ratio Prot	c0.10	c0.37		0.01	0.30		0.04	0.01		c0.21	0.01	
v/s Ratio Perm			0.09			c0.56			0.03			0.40
v/c Ratio	0.66	0.70	0.09	0.14	0.68	0.56	0.37	0.21	0.03	0.78	0.06	0.40
Uniform Delay, d1	58.6	25.6	0.0	65.5	32.8	0.0	58.7	63.6	0.0	49.4	45.2	0.0
Progression Factor	1.00	1.00	1.00	1.00	1.00	1.00	1.00	1.00	1.00	1.00	1.00	1.00
Incremental Delay, d2	1.7	1.2	0.1	0.1	1.4	1.5	0.6	0.4	0.0	4.3	0.0	0.8
Delay (s)	60.2	26.8	0.1	65.6	34.1	1.5	59.3	64.0	0.0	53.6	45.2	0.8
Level of Service	E	C	A	E	C	A	E	E	A	D	D	A
Approach Delay (s)		30.9			24.1			49.0			29.2	
Approach LOS		C			C			D			C	

Intersection Summary			
HCM Average Control Delay	28.6	HCM Level of Service	C
HCM Volume to Capacity ratio	0.69		
Actuated Cycle Length (s)	145.0	Sum of lost time (s)	3.0
Intersection Capacity Utilization	72.8%	ICU Level of Service	C
Analysis Period (min)	15		

c Critical Lane Group

Movement	EBL	EBT	WBT	WBR	SWL	SWR
Lane Configurations		↑↑	↑↑			↑↑
Sign Control		Free	Free		Stop	
Grade		0%	0%		0%	
Volume (veh/h)	0	0	0	0	0	0
Peak Hour Factor	0.95	0.95	0.95	0.95	0.95	0.95
Hourly flow rate (vph)	0	0	0	0	0	0
Pedestrians						
Lane Width (ft)						
Walking Speed (ft/s)						
Percent Blockage						
Right turn flare (veh)						
Median type					None	
Median storage veh)						
Upstream signal (ft)						
pX, platoon unblocked						
vC, conflicting volume	0				0	0
vC1, stage 1 conf vol						
vC2, stage 2 conf vol						
vCu, unblocked vol	0				0	0
tC, single (s)	4.1				6.8	6.9
tC, 2 stage (s)						
tF (s)	2.2				3.5	3.3
p0 queue free %	100				100	100
cM capacity (veh/h)	1622				1023	1084

Direction, Lane #	EB 1	EB 2	WB 1	WB 2	SW 1	SW 2
Volume Total	0	0	0	0	0	0
Volume Left	0	0	0	0	0	0
Volume Right	0	0	0	0	0	0
cSH	1700	1700	1700	1700	1700	1700
Volume to Capacity	0.00	0.00	0.00	0.00	0.00	0.00
Queue Length 95th (ft)	0	0	0	0	0	0
Control Delay (s)	0.0	0.0	0.0	0.0	0.0	0.0
Lane LOS					A	A
Approach Delay (s)	0.0		0.0		0.0	
Approach LOS					A	

Intersection Summary			
Average Delay	0.0		
Intersection Capacity Utilization	0.0%	ICU Level of Service	A
Analysis Period (min)	15		

HCM Signalized Intersection Capacity Analysis — Kincora
5: Route 7 & Countryside Blvd. — Future Background 2025

Movement	EBL	EBT	EBR	WBL	WBT	WBR	NBL	NBT	NBR	SBL	SBT	SBR
Lane Configurations												
Ideal Flow (vphpl)	1900	1900	1900	1900	1900	1900	1900	1900	1900	1900	1900	1900
Total Lost time (s)	3.0	3.0	3.0	3.0	3.0	3.0	3.0	3.0	3.0	3.0	3.0	3.0
Lane Util. Factor	0.97	0.86	1.00	0.97	0.86	1.00	0.97	0.95	1.00	0.97	0.95	1.00
Frt	1.00	1.00	0.85	1.00	1.00	0.85	1.00	1.00	0.85	1.00	1.00	0.85
Flt Protected	0.95	1.00	1.00	0.95	1.00	1.00	0.95	1.00	1.00	0.95	1.00	1.00
Satd. Flow (prot)	3433	6408	1583	3433	6408	1583	3433	3539	1583	3433	3539	1583
Flt Permitted	0.95	1.00	1.00	0.95	1.00	1.00	0.95	1.00	1.00	0.95	1.00	1.00
Satd. Flow (perm)	3433	6408	1583	3433	6408	1583	3433	3539	1583	3433	3539	1583
Volume (vph)	287	3072	166	134	2031	108	86	70	153	165	94	240
Peak-hour factor, PHF	0.95	0.95	0.95	0.95	0.95	0.95	0.95	0.95	0.95	0.95	0.95	0.95
Adj. Flow (vph)	302	3234	175	141	2138	114	91	74	161	174	99	253
RTOR Reduction (vph)	0	0	0	0	0	39	0	0	0	0	0	23
Lane Group Flow (vph)	302	3234	175	141	2138	75	91	74	161	174	99	230
Turn Type	Prot		Free	Prot		pm+ov	Prot		Free	Prot		pm+ov
Protected Phases	1	6		5	2	3	7	4		3	8	1
Permitted Phases			Free			2			Free			8
Actuated Green, G (s)	15.5	78.8	140.0	8.1	71.4	84.6	7.4	11.9	140.0	13.2	17.7	33.2
Effective Green, g (s)	19.5	82.8	140.0	12.1	75.4	92.6	11.4	15.9	140.0	17.2	21.7	41.2
Actuated g/C Ratio	0.14	0.59	1.00	0.09	0.54	0.66	0.08	0.11	1.00	0.12	0.15	0.29
Clearance Time (s)	7.0	7.0		7.0	7.0	7.0	7.0	7.0		7.0	7.0	7.0
Vehicle Extension (s)	2.0	2.0		3.0	2.0	2.0	2.0	2.0		2.0	2.0	2.0
Lane Grp Cap (vph)	478	3790	1583	297	3451	1081	280	402	1583	422	549	500
v/s Ratio Prot	c0.09	c0.50		0.04	0.33	0.01	0.03	0.02		c0.05	0.03	c0.06
v/s Ratio Perm			0.11			0.04			0.10			0.08
v/c Ratio	0.63	0.85	0.11	0.47	0.62	0.07	0.33	0.18	0.10	0.41	0.18	0.46
Uniform Delay, d1	56.9	23.6	0.0	60.9	22.4	8.4	60.7	56.2	0.0	56.7	51.4	40.3
Progression Factor	1.00	1.00	1.00	1.00	1.00	1.00	1.00	1.00	1.00	1.00	1.00	1.00
Incremental Delay, d2	2.0	2.7	0.1	1.2	0.8	0.0	0.2	0.1	0.1	0.2	0.1	0.2
Delay (s)	58.9	26.2	0.1	62.1	23.2	8.4	60.9	56.3	0.1	57.0	51.5	40.6
Level of Service	E	C	A	E	C	A	E	E	A	E	D	D
Approach Delay (s)		27.7			24.8			29.8			48.1	
Approach LOS		C			C			C			D	

Intersection Summary

HCM Average Control Delay	28.3	HCM Level of Service	C
HCM Volume to Capacity ratio	0.71		
Actuated Cycle Length (s)	140.0	Sum of lost time (s)	6.0
Intersection Capacity Utilization	70.9%	ICU Level of Service	C
Analysis Period (min)	15		

c Critical Lane Group

HCM Signalized Intersection Capacity Analysis — Kincora
6: Route 7 & Palisade Parkway — Future Background 2025

Movement	EBL	EBT	EBR	WBL	WBT	WBR	NBL	NBT	NBR	SBL	SBT	SBR
Lane Configurations												
Ideal Flow (vphpl)	1900	1900	1900	1900	1900	1900	1900	1900	1900	1900	1900	1900
Total Lost time (s)	3.0	3.0	3.0	3.0	3.0	3.0	3.0	3.0	3.0	3.0	3.0	3.0
Lane Util. Factor	0.97	0.86	1.00	1.00	0.86	1.00	0.97	1.00	1.00	0.97	1.00	1.00
Frt	1.00	1.00	0.85	1.00	1.00	0.85	1.00	1.00	0.85	1.00	1.00	0.85
Flt Protected	0.95	1.00	1.00	0.95	1.00	1.00	0.95	1.00	1.00	0.95	1.00	1.00
Satd. Flow (prot)	3433	6408	1583	1770	6408	1583	3433	1863	1583	3433	1863	1583
Flt Permitted	0.95	1.00	1.00	0.95	1.00	1.00	0.95	1.00	1.00	0.95	1.00	1.00
Satd. Flow (perm)	3433	6408	1583	1770	6408	1583	3433	1863	1583	3433	1863	1583
Volume (vph)	162	2807	381	123	1993	73	58	34	42	131	82	208
Peak-hour factor, PHF	0.95	0.95	0.95	0.95	0.95	0.95	0.95	0.95	0.95	0.95	0.95	0.95
Adj. Flow (vph)	171	2955	401	129	2098	77	61	36	44	138	86	219
RTOR Reduction (vph)	0	0	0	0	0	0	0	0	6	0	0	26
Lane Group Flow (vph)	171	2955	401	129	2098	77	61	36	38	138	86	193
Turn Type	Prot		Free	Prot		Free	Prot		pm+ov	Prot		pm+ov
Protected Phases	1	6		5	2		7	4	5	3	8	1
Permitted Phases			Free			Free			4			8
Actuated Green, G (s)	10.7	68.3	120.0	10.9	68.5	120.0	4.0	4.8	15.7	8.0	8.8	19.5
Effective Green, g (s)	14.7	72.3	120.0	14.9	72.5	120.0	8.0	8.8	23.7	12.0	12.8	27.5
Actuated g/C Ratio	0.12	0.60	1.00	0.12	0.60	1.00	0.07	0.07	0.20	0.10	0.11	0.23
Clearance Time (s)	7.0	7.0		7.0	7.0		7.0	7.0	7.0	7.0	7.0	7.0
Vehicle Extension (s)	2.0	4.0		2.0	4.0		3.0	3.0	2.0	3.0	3.0	2.0
Lane Grp Cap (vph)	421	3861	1583	220	3872	1583	229	137	352	343	199	402
v/s Ratio Prot	0.05	c0.46		c0.07	0.33		0.02	0.02	0.01	c0.04	0.05	c0.06
v/s Ratio Perm			c0.25			0.05			0.01			0.08
v/c Ratio	0.41	0.77	0.25	0.59	0.54	0.05	0.27	0.26	0.11	0.40	0.43	0.48
Uniform Delay, d1	48.6	17.6	0.0	49.6	14.0	0.0	53.2	52.5	39.5	50.6	50.2	40.1
Progression Factor	1.00	1.00	1.00	1.00	1.00	1.00	1.00	1.00	1.00	1.00	1.00	1.00
Incremental Delay, d2	0.2	1.5	0.4	2.6	0.5	0.1	0.6	1.0	0.1	0.8	1.5	0.3
Delay (s)	48.9	19.1	0.4	52.2	14.5	0.1	53.8	53.6	39.5	51.4	51.7	40.4
Level of Service	D	B	A	D	B	A	D	D	D	D	D	D
Approach Delay (s)		18.4			16.2			49.3			46.0	
Approach LOS		B			B			D			D	

Intersection Summary

HCM Average Control Delay	20.2	HCM Level of Service	C
HCM Volume to Capacity ratio	0.67		
Actuated Cycle Length (s)	120.0	Sum of lost time (s)	9.0
Intersection Capacity Utilization	67.9%	ICU Level of Service	C
Analysis Period (min)	15		

c Critical Lane Group

Movement	WBL	WBR	NBT	NBR	SBL	SBT
Lane Configurations						
Ideal Flow (vphpl)	1900	1900	1900	1900	1900	1900
Total Lost time (s)	3.0	3.0	3.0		3.0	3.0
Lane Util. Factor	1.00	1.00	0.95		1.00	0.95
Frt	1.00	0.85	0.97		1.00	1.00
Flt Protected	0.95	1.00	1.00		0.95	1.00
Satd. Flow (prot)	1770	1583	3440		1770	3539
Flt Permitted	0.95	1.00	1.00		0.44	1.00
Satd. Flow (perm)	1770	1583	3440		825	3539
Volume (vph)	89	191	304	70	159	550
Peak-hour factor, PHF	0.95	0.95	0.95	0.95	0.95	0.95
Adj. Flow (vph)	94	201	320	74	167	579
RTOR Reduction (vph)	0	123	17	0	0	0
Lane Group Flow (vph)	94	78	377	0	167	579
Turn Type		pm+ov			pm+pt	
Protected Phases	4	1	2		1	6
Permitted Phases		4			6	
Actuated Green, G (s)	4.9	12.4	18.5		33.0	33.0
Effective Green, g (s)	8.9	20.4	23.0		37.5	37.5
Actuated g/C Ratio	0.17	0.39	0.44		0.72	0.72
Clearance Time (s)	7.0	7.0	7.5		7.0	7.5
Vehicle Extension (s)	2.0	2.0	2.0		2.0	2.0
Lane Grp Cap (vph)	301	707	1510		798	2533
v/s Ratio Prot	c0.05	0.02	0.11		0.05	c0.16
v/s Ratio Perm		0.03			0.10	
v/c Ratio	0.31	0.11	0.25		0.21	0.23
Uniform Delay, d1	19.1	10.2	9.3		2.5	2.5
Progression Factor	1.00	1.00	1.00		1.00	1.00
Incremental Delay, d2	0.2	0.0	0.0		0.0	0.0
Delay (s)	19.3	10.2	9.3		2.6	2.5
Level of Service	B	B	A		A	A
Approach Delay (s)	13.1		9.3			2.6
Approach LOS	B		A			A

Intersection Summary			
HCM Average Control Delay	6.6	HCM Level of Service	A
HCM Volume to Capacity ratio	0.24		
Actuated Cycle Length (s)	52.4	Sum of lost time (s)	6.0
Intersection Capacity Utilization	37.1%	ICU Level of Service	A
Analysis Period (min)	15		

c Critical Lane Group

Movement	EBL	EBT	EBR	WBL	WBT	WBR	NBL	NBT	NBR	SBL	SBT	SBR
Lane Configurations												
Ideal Flow (vphpl)	1900	1900	1900	1900	1900	1900	1900	1900	1900	1900	1900	1900
Total Lost time (s)		4.0	4.0		4.0	4.0	4.0	4.0	4.0	4.0	4.0	4.0
Lane Util. Factor		1.00	1.00		1.00	1.00	1.00	0.95	1.00	1.00	0.95	1.00
Frt		1.00	0.85		1.00	0.85	1.00	1.00	0.85	1.00	1.00	0.85
Flt Protected		0.95	1.00		0.96	1.00	0.95	1.00	1.00	0.95	1.00	1.00
Satd. Flow (prot)		1778	1583		1783	1583	1770	3539	1583	1770	3539	1583
Flt Permitted		0.67	1.00		0.72	1.00	0.34	1.00	1.00	0.58	1.00	1.00
Satd. Flow (perm)		1257	1583		1335	1583	632	3539	1583	1075	3539	1583
Volume (vph)	41	2	145	71	9	38	35	271	15	9	684	39
Peak-hour factor, PHF	0.95	0.95	0.95	0.95	0.95	0.95	0.95	0.95	0.95	0.95	0.95	0.95
Adj. Flow (vph)	43	2	153	75	9	40	37	285	16	9	720	41
RTOR Reduction (vph)	0	0	132	0	0	35	0	0	5	0	0	14
Lane Group Flow (vph)	0	45	21	0	84	5	37	285	11	9	720	27
Turn Type	Perm		Perm	Perm		Perm	pm+pt		Perm	pm+pt		Perm
Protected Phases		4			8		5	2		1	6	
Permitted Phases	4		4	8		8	2		2	6		6
Actuated Green, G (s)		9.3	9.3		9.3	9.3	61.9	58.7	58.7	57.5	56.5	56.5
Effective Green, g (s)		12.3	12.3		12.3	12.3	67.9	61.7	61.7	63.5	59.5	59.5
Actuated g/C Ratio		0.14	0.14		0.14	0.14	0.75	0.69	0.69	0.71	0.66	0.66
Clearance Time (s)		7.0	7.0		7.0	7.0	7.0	7.0	7.0	7.0	7.0	7.0
Vehicle Extension (s)		2.0	2.0		2.0	2.0	2.0	2.0	2.0	2.0	2.0	2.0
Lane Grp Cap (vph)		172	216		182	216	555	2426	1085	789	2340	1047
v/s Ratio Prot							c0.00	0.08		0.00	c0.20	
v/s Ratio Perm		0.04	0.01		c0.06	0.00	0.05		0.01	0.01		0.02
v/c Ratio		0.26	0.10		0.46	0.03	0.07	0.12	0.01	0.01	0.31	0.03
Uniform Delay, d1		34.8	34.0		35.8	33.7	3.0	4.8	4.5	3.9	6.5	5.3
Progression Factor		1.00	1.00		1.00	1.00	1.00	1.00	1.00	1.00	1.00	1.00
Incremental Delay, d2		0.3	0.1		0.7	0.0	0.0	0.1	0.0	0.0	0.3	0.0
Delay (s)		35.1	34.1		36.5	33.7	3.0	4.9	4.5	3.9	6.8	5.3
Level of Service		D	C		D	C	A	A	A	A	A	A
Approach Delay (s)		34.3			35.6			4.7			6.7	
Approach LOS		C			D			A			A	

Intersection Summary			
HCM Average Control Delay	12.6	HCM Level of Service	B
HCM Volume to Capacity ratio	0.33		
Actuated Cycle Length (s)	90.0	Sum of lost time (s)	16.0
Intersection Capacity Utilization	43.3%	ICU Level of Service	A
Analysis Period (min)	15		

c Critical Lane Group

Movement	EBL	EBT	EBR	WBL	WBT	WBR	NBL	NBT	NBR	SBL	SBT	SBR
Lane Configurations												
Ideal Flow (vphpl)	1900	1900	1900	1900	1900	1900	1900	1900	1900	1900	1900	1900
Total Lost time (s)	3.0	3.0	3.0	3.0	3.0	3.0	3.0	3.0	3.0	3.0	3.0	3.0
Lane Util. Factor	1.00	0.95	1.00	0.97	0.95	1.00	0.97	0.95	1.00	0.97	0.95	1.00
Frt	1.00	1.00	0.85	1.00	1.00	0.85	1.00	1.00	0.85	1.00	1.00	0.85
Flt Protected	0.95	1.00	1.00	0.95	1.00	1.00	0.95	1.00	1.00	0.95	1.00	1.00
Satd. Flow (prot)	1770	3539	1583	3433	3539	1583	3433	3539	1583	3433	3539	1583
Flt Permitted	0.95	1.00	1.00	0.95	1.00	1.00	0.95	1.00	1.00	0.95	1.00	1.00
Satd. Flow (perm)	1770	3539	1583	3433	3539	1583	3433	3539	1583	3433	3539	1583
Volume (vph)	288	383	220	205	150	157	116	654	296	318	470	69
Peak-hour factor, PHF	0.95	0.95	0.95	0.95	0.95	0.95	0.95	0.95	0.95	0.95	0.95	0.95
Adj. Flow (vph)	303	403	232	216	158	165	122	688	312	335	495	73
RTOR Reduction (vph)	0	0	0	0	0	0	0	0	0	0	0	0
Lane Group Flow (vph)	303	403	232	216	158	165	122	688	312	335	495	73
Turn Type	Prot		Free	Prot		Free	Prot		Free	Prot		Free
Protected Phases	7	4		3	8		5	2		1	6	
Permitted Phases			Free			Free			Free			Free
Actuated Green, G (s)	20.3	24.5	111.9	12.4	16.6	111.9	9.8	31.4	111.9	15.6	37.2	111.9
Effective Green, g (s)	24.3	28.5	111.9	16.4	20.6	111.9	13.8	35.4	111.9	19.6	41.2	111.9
Actuated g/C Ratio	0.22	0.25	1.00	0.15	0.18	1.00	0.12	0.32	1.00	0.18	0.37	1.00
Clearance Time (s)	7.0	7.0		7.0	7.0		7.0	7.0		7.0	7.0	
Vehicle Extension (s)	3.0	3.0		3.0	3.0		3.0	5.0		3.0	5.0	
Lane Grp Cap (vph)	384	901	1583	503	652	1583	423	1120	1583	601	1303	1583
v/s Ratio Prot	c0.17	c0.11		0.06	0.04		0.04	c0.19		c0.10	0.14	
v/s Ratio Perm			0.15			0.10			0.20			0.05
v/c Ratio	0.79	0.45	0.15	0.43	0.24	0.10	0.29	0.61	0.20	0.56	0.38	0.05
Uniform Delay, d1	41.4	35.1	0.0	43.5	39.0	0.0	44.6	32.5	0.0	42.2	26.0	0.0
Progression Factor	1.00	1.00	1.00	1.00	1.00	1.00	1.00	1.00	1.00	1.00	1.00	1.00
Incremental Delay, d2	10.3	0.4	0.2	0.6	0.2	0.1	0.4	1.5	0.3	1.1	0.4	0.1
Delay (s)	51.7	35.4	0.2	44.1	39.2	0.1	45.0	33.9	0.3	43.3	26.4	0.1
Level of Service	D	D	A	D	D	A	D	C	A	D	C	A
Approach Delay (s)		32.0			29.2			25.8			30.5	
Approach LOS		C			C			C			C	

Intersection Summary			
HCM Average Control Delay	29.2	HCM Level of Service	C
HCM Volume to Capacity ratio	0.60		
Actuated Cycle Length (s)	111.9	Sum of lost time (s)	9.0
Intersection Capacity Utilization	68.9%	ICU Level of Service	C
Analysis Period (min)	15		

c Critical Lane Group

Movement	EBL	EBR	NBL	NBT	SBT	SBR
Lane Configurations						
Ideal Flow (vphpl)	1900	1900	1900	1900	1900	1900
Total Lost time (s)	4.0		4.0	4.0	4.0	
Lane Util. Factor	0.97		1.00	0.95	0.95	
Frt	0.95		1.00	1.00	0.99	
Flt Protected	0.97		0.95	1.00	1.00	
Satd. Flow (prot)	3318		1770	3539	3488	
Flt Permitted	0.97		0.08	1.00	1.00	
Satd. Flow (perm)	3318		145	3539	3488	
Volume (vph)	117	62	48	1974	1436	152
Peak-hour factor, PHF	0.95	0.95	0.95	0.95	0.95	0.95
Adj. Flow (vph)	123	65	51	2078	1512	160
RTOR Reduction (vph)	55	0	0	0	6	0
Lane Group Flow (vph)	133	0	51	2078	1666	0
Turn Type			pm+pt			
Protected Phases	4		5	2	6	
Permitted Phases			2			
Actuated Green, G (s)	11.2		69.2	69.2	59.2	
Effective Green, g (s)	14.2		72.2	72.2	62.2	
Actuated g/C Ratio	0.15		0.76	0.76	0.66	
Clearance Time (s)	7.0		7.0	7.0	7.0	
Vehicle Extension (s)	4.0		2.0	3.0	3.0	
Lane Grp Cap (vph)	499		214	2707	2298	
v/s Ratio Prot	c0.04		0.02	c0.59	0.48	
v/s Ratio Perm			0.17			
v/c Ratio	0.27		0.24	0.77	0.72	
Uniform Delay, d1	35.5		8.9	6.3	10.5	
Progression Factor	1.00		1.00	1.00	1.00	
Incremental Delay, d2	0.4		0.2	1.4	1.2	
Delay (s)	35.9		9.1	7.7	11.7	
Level of Service	D		A	A	B	
Approach Delay (s)	35.9			7.7	11.7	
Approach LOS	D			A	B	

Intersection Summary			
HCM Average Control Delay	10.7	HCM Level of Service	B
HCM Volume to Capacity ratio	0.69		
Actuated Cycle Length (s)	94.4	Sum of lost time (s)	8.0
Intersection Capacity Utilization	69.6%	ICU Level of Service	C
Analysis Period (min)	15		

c Critical Lane Group

Movement	EBL	EBT	EBR	WBL	WBT	WBR	NBL	NBT	NBR	SBL	SBT	SBR
Lane Configurations												
Ideal Flow (vphpl)	1900	1900	1900	1900	1900	1900	1900	1900	1900	1900	1900	1900
Total Lost time (s)	4.0	4.0	4.0	3.0	4.0	3.0	4.0	3.0	3.0	3.0	3.0	4.0
Lane Util. Factor	0.97	0.95	1.00	0.97	0.95	1.00	0.97	0.95	1.00	0.97	0.95	1.00
Frt	1.00	1.00	0.85	1.00	1.00	0.85	1.00	1.00	0.85	1.00	1.00	0.85
Flt Protected	0.95	1.00	1.00	0.95	1.00	1.00	0.95	1.00	1.00	0.95	1.00	1.00
Satd. Flow (prot)	3433	3539	1583	3433	3539	1583	3433	3539	1583	3433	3539	1583
Flt Permitted	0.95	1.00	1.00	0.95	1.00	1.00	0.95	1.00	1.00	0.95	1.00	1.00
Satd. Flow (perm)	3433	3539	1583	3433	3539	1583	3433	3539	1583	3433	3539	1583
Volume (vph)	483	304	469	121	415	65	378	86	112	39	178	164
Peak-hour factor, PHF	0.95	0.95	0.95	0.95	0.95	0.95	0.95	0.95	0.95	0.95	0.95	0.95
Adj. Flow (vph)	508	320	494	127	437	68	398	91	118	41	187	173
RTOR Reduction (vph)	0	0	0	0	0	0	0	0	75	0	0	0
Lane Group Flow (vph)	508	320	494	127	437	68	398	91	43	41	187	173
Turn Type	Prot		Free	Prot		Free	Prot		pm+ov	Prot		Free
Protected Phases	1	6		5	2		7	4	5	3	8	
Permitted Phases			Free			Free			4			Free
Actuated Green, G (s)	18.9	39.4	100.0	8.1	28.6	100.0	15.7	20.9	29.0	4.1	9.3	100.0
Effective Green, g (s)	21.9	42.4	100.0	12.1	31.6	100.0	18.7	24.4	36.5	8.1	12.8	100.0
Actuated g/C Ratio	0.22	0.42	1.00	0.12	0.32	1.00	0.19	0.24	0.36	0.08	0.13	1.00
Clearance Time (s)	7.0	7.0		7.0	7.0		7.0	6.5	7.0	7.0	6.5	
Vehicle Extension (s)	2.5	4.0		2.5	4.0		2.5	2.5	2.5	2.5	2.5	
Lane Grp Cap (vph)	752	1501	1583	415	1118	1583	642	864	625	278	453	1583
v/s Ratio Prot	c0.15	0.09		0.04	c0.12		c0.12	0.03	0.01	0.01	c0.05	
v/s Ratio Perm			0.31			0.04			0.02			0.11
v/c Ratio	0.68	0.21	0.31	0.31	0.39	0.04	0.62	0.11	0.07	0.15	0.41	0.11
Uniform Delay, d1	35.8	18.2	0.0	40.1	26.7	0.0	37.4	29.3	20.7	42.7	40.1	0.0
Progression Factor	1.00	1.00	1.00	1.00	1.00	1.00	1.00	1.00	1.00	1.00	1.00	1.00
Incremental Delay, d2	2.2	0.3	0.5	0.3	1.0	0.1	1.5	0.0	0.0	0.2	0.4	0.1
Delay (s)	38.0	18.6	0.5	40.4	27.7	0.1	38.9	29.4	20.7	42.9	40.6	0.1
Level of Service	D	B	A	D	C	A	D	C	C	D	D	A
Approach Delay (s)		19.3			27.3			33.9			23.4	
Approach LOS		B			C			C			C	

Intersection Summary			
HCM Average Control Delay	24.6	HCM Level of Service	C
HCM Volume to Capacity ratio	0.52		
Actuated Cycle Length (s)	100.0	Sum of lost time (s)	15.0
Intersection Capacity Utilization	55.3%	ICU Level of Service	B
Analysis Period (min)	15		

c Critical Lane Group

Movement	EBL	EBT	EBR	WBL	WBT	WBR	NBL	NBT	NBR	SBL	SBT	SBR
Lane Configurations												
Ideal Flow (vphpl)	1900	1900	1900	1900	1900	1900	1900	1900	1900	1900	1900	1900
Total Lost time (s)	3.0	3.0	3.0	3.0	3.0	3.0	3.0	3.0	3.0	3.0	3.0	3.0
Lane Util. Factor	0.97	0.95	1.00	0.97	0.95	1.00	0.97	0.95	1.00	1.00	0.95	1.00
Frt	1.00	1.00	0.85	1.00	1.00	0.85	1.00	1.00	0.85	1.00	1.00	0.85
Flt Protected	0.95	1.00	1.00	0.95	1.00	1.00	0.95	1.00	1.00	0.95	1.00	1.00
Satd. Flow (prot)	3433	3539	1583	3433	3539	1583	3433	3539	1583	1770	3539	1583
Flt Permitted	0.95	1.00	1.00	0.95	1.00	1.00	0.95	1.00	1.00	0.95	1.00	1.00
Satd. Flow (perm)	3433	3539	1583	3433	3539	1583	3433	3539	1583	1770	3539	1583
Volume (vph)	72	75	79	190	365	18	161	702	220	4	765	116
Peak-hour factor, PHF	0.95	0.95	0.95	0.95	0.95	0.95	0.95	0.95	0.95	0.95	0.95	0.95
Adj. Flow (vph)	76	79	83	200	384	19	169	739	232	4	805	122
RTOR Reduction (vph)	0	0	70	0	0	15	0	0	111	0	0	70
Lane Group Flow (vph)	76	79	13	200	384	4	169	739	121	4	805	52
Turn Type	Prot		Perm	Prot		Perm	Prot		Perm	Prot		Perm
Protected Phases	7	4		3	8		1	6		5	2	
Permitted Phases			4			8			6			2
Actuated Green, G (s)	7.7	11.6	11.6	12.2	16.1	16.1	11.4	50.3	50.3	1.6	40.5	40.5
Effective Green, g (s)	11.7	16.6	16.6	16.2	21.1	21.1	15.4	54.8	54.8	5.6	45.0	45.0
Actuated g/C Ratio	0.11	0.16	0.16	0.15	0.20	0.20	0.15	0.52	0.52	0.05	0.43	0.43
Clearance Time (s)	7.0	8.0	8.0	7.0	8.0	8.0	7.0	7.5	7.5	7.0	7.5	7.5
Vehicle Extension (s)	3.0	3.0	3.0	3.0	3.0	3.0	3.0	3.0	3.0	3.0	3.0	3.0
Lane Grp Cap (vph)	382	558	250	529	710	318	503	1844	825	94	1514	677
v/s Ratio Prot	0.02	0.02		c0.06	c0.11		c0.05	0.21		0.00	c0.23	
v/s Ratio Perm			0.01			0.00			0.08			0.03
v/c Ratio	0.20	0.14	0.05	0.38	0.54	0.01	0.34	0.40	0.15	0.04	0.53	0.08
Uniform Delay, d1	42.5	38.2	37.6	40.0	37.7	33.7	40.3	15.3	13.1	47.3	22.3	17.8
Progression Factor	1.00	1.00	1.00	1.00	1.00	1.00	1.00	1.00	1.00	1.00	1.00	1.00
Incremental Delay, d2	0.3	0.1	0.1	0.5	0.8	0.0	0.4	0.1	0.1	0.2	0.4	0.0
Delay (s)	42.7	38.3	37.7	40.4	38.6	33.7	40.7	15.4	13.2	47.4	22.7	17.9
Level of Service	D	D	D	D	D	C	D	B	B	D	C	B
Approach Delay (s)		39.5			39.0			18.7			22.1	
Approach LOS		D			D			B			C	

Intersection Summary			
HCM Average Control Delay	25.7	HCM Level of Service	C
HCM Volume to Capacity ratio	0.47		
Actuated Cycle Length (s)	105.2	Sum of lost time (s)	9.0
Intersection Capacity Utilization	65.1%	ICU Level of Service	C
Analysis Period (min)	15		

c Critical Lane Group

Movement	EBL	EBR	NBL	NBT	SBT	SBR
Lane Configurations						
Ideal Flow (vphpl)	1900	1900	1900	1900	1900	1900
Total Lost time (s)	3.0	3.0	3.0	3.0	3.0	3.0
Lane Util. Factor	1.00	1.00	1.00	0.95	0.95	1.00
Frt	1.00	0.85	1.00	1.00	1.00	0.85
Flt Protected	0.95	1.00	0.95	1.00	1.00	1.00
Satd. Flow (prot)	1770	1583	1770	3539	3539	1583
Flt Permitted	0.95	1.00	0.22	1.00	1.00	1.00
Satd. Flow (perm)	1770	1583	401	3539	3539	1583
Volume (vph)	97	54	172	1133	863	142
Peak-hour factor, PHF	0.95	0.95	0.95	0.95	0.95	0.95
Adj. Flow (vph)	102	57	181	1193	908	149
RTOR Reduction (vph)	0	47	0	0	0	46
Lane Group Flow (vph)	102	10	181	1193	908	103
Turn Type		Perm	pm+pt			pm+ov
Protected Phases	4		1	6	2	4
Permitted Phases		4	6			2
Actuated Green, G (s)	7.9	7.9	45.2	45.2	30.7	38.6
Effective Green, g (s)	11.9	11.9	48.7	48.7	34.2	46.1
Actuated g/C Ratio	0.18	0.18	0.73	0.73	0.51	0.69
Clearance Time (s)	7.0	7.0	7.0	6.5	6.5	7.0
Vehicle Extension (s)	3.0	3.0	4.0	4.0	4.0	3.0
Lane Grp Cap (vph)	316	283	530	2588	1817	1167
v/s Ratio Prot	c0.06		0.06	c0.34	c0.26	0.02
v/s Ratio Perm		0.01	0.19			0.05
v/c Ratio	0.32	0.04	0.34	0.46	0.50	0.09
Uniform Delay, d1	23.8	22.6	4.2	3.6	10.6	3.4
Progression Factor	1.00	1.00	1.00	1.00	1.00	1.00
Incremental Delay, d2	0.6	0.1	0.5	0.2	0.3	0.0
Delay (s)	24.4	22.7	4.7	3.8	10.9	3.4
Level of Service	C	C	A	A	B	A
Approach Delay (s)	23.8			3.9	9.8	
Approach LOS	C			A	A	

Intersection Summary			
HCM Average Control Delay	7.6	HCM Level of Service	A
HCM Volume to Capacity ratio	0.46		
Actuated Cycle Length (s)	66.6	Sum of lost time (s)	9.0
Intersection Capacity Utilization	48.8%	ICU Level of Service	A
Analysis Period (min)	15		

c Critical Lane Group

Movement	EBL	EBT	EBR	WBL	WBT	WBR	NBL	NBT	NBR	SBL	SBT	SBR
Lane Configurations												
Ideal Flow (vphpl)	1900	1900	1900	1900	1900	1900	1900	1900	1900	1900	1900	1900
Lane Width	12	12	12	12	12	13	12	12	12	12	12	12
Total Lost time (s)	3.0	3.0	3.0	3.0	3.0	3.0	3.0	3.0	3.0	3.0	3.0	3.0
Lane Util. Factor	0.97	0.91	1.00	0.97	0.86	1.00	0.97	0.95	1.00	0.97	0.95	1.00
Frt	1.00	1.00	0.85	1.00	1.00	0.85	1.00	1.00	0.85	1.00	1.00	0.85
Flt Protected	0.95	1.00	1.00	0.95	1.00	1.00	0.95	1.00	1.00	0.95	1.00	1.00
Satd. Flow (prot)	3433	5085	1583	3433	6408	1636	3433	3539	1583	3433	3539	1583
Flt Permitted	0.95	1.00	1.00	0.95	1.00	1.00	0.95	1.00	1.00	0.95	1.00	1.00
Satd. Flow (perm)	3433	5085	1583	3433	6408	1636	3433	3539	1583	3433	3539	1583
Volume (vph)	226	1418	252	103	455	482	62	227	110	789	535	427
Peak-hour factor, PHF	0.95	0.95	0.95	0.95	0.95	0.95	0.95	0.95	0.95	0.95	0.95	0.95
Adj. Flow (vph)	238	1493	265	108	479	507	65	239	116	831	563	449
RTOR Reduction (vph)	0	0	0	0	0	0	0	0	9	0	0	67
Lane Group Flow (vph)	238	1493	265	108	479	507	65	239	107	831	563	382
Turn Type	Prot		Free	Prot		Free	Prot		pm+ov	Prot		pm+ov
Protected Phases	1	6		5	2		3	8	5	7	4	1
Permitted Phases			Free			Free			8			4
Actuated Green, G (s)	13.8	47.1	130.0	8.7	42.0	130.0	4.0	14.2	22.9	32.5	42.7	56.5
Effective Green, g (s)	17.8	51.1	130.0	12.7	46.0	130.0	8.0	17.7	30.4	36.5	46.2	64.0
Actuated g/C Ratio	0.14	0.39	1.00	0.10	0.35	1.00	0.06	0.14	0.23	0.28	0.36	0.49
Clearance Time (s)	7.0	7.0		7.0	7.0		7.0	6.5	7.0	7.0	6.5	7.0
Vehicle Extension (s)	2.0	3.0		2.0	3.0		2.0	2.0	2.0	2.0	2.0	2.0
Lane Grp Cap (vph)	470	1999	1583	335	2267	1636	211	482	407	964	1258	816
v/s Ratio Prot	c0.07	c0.29		0.03	0.07		0.02	0.07	0.03	c0.24	0.16	c0.06
v/s Ratio Perm			0.17			0.31			0.04			0.18
v/c Ratio	0.51	0.75	0.17	0.32	0.21	0.31	0.31	0.50	0.26	0.86	0.45	0.47
Uniform Delay, d1	52.0	33.9	0.0	54.6	29.3	0.0	58.4	52.0	40.6	44.4	32.1	21.8
Progression Factor	1.00	1.00	1.00	1.00	1.00	1.00	1.00	1.00	1.00	1.00	1.00	1.00
Incremental Delay, d2	0.3	2.6	0.2	0.2	0.2	0.5	0.3	0.3	0.1	7.8	0.1	0.2
Delay (s)	52.3	36.5	0.2	54.8	29.5	0.5	58.7	52.3	40.8	52.1	32.2	21.9
Level of Service	D	D	A	D	C	A	E	D	D	D	C	C
Approach Delay (s)		33.6			18.6			50.1			38.7	
Approach LOS		C			B			D			D	

Intersection Summary			
HCM Average Control Delay	33.6	HCM Level of Service	C
HCM Volume to Capacity ratio	0.69		
Actuated Cycle Length (s)	130.0	Sum of lost time (s)	3.0
Intersection Capacity Utilization	73.7%	ICU Level of Service	D
Analysis Period (min)	15		

c Critical Lane Group

Movement	EBL	EBT	EBR	WBL	WBT	WBR	NBL	NBT	NBR	SBL	SBT	SBR
Lane Configurations												
Ideal Flow (vphpl)	1900	1900	1900	1900	1900	1900	1900	1900	1900	1900	1900	1900
Total Lost time (s)	3.0	3.0	3.0	3.0	3.0	3.0	3.0	3.0	3.0	3.0	3.0	3.0
Lane Util. Factor	1.00	0.86	1.00	1.00	0.86	1.00	1.00	0.95	1.00	1.00	0.95	1.00
Frt	1.00	1.00	0.85	1.00	1.00	0.85	1.00	1.00	0.85	1.00	1.00	0.85
Flt Protected	0.95	1.00	1.00	0.95	1.00	1.00	0.95	1.00	1.00	0.95	1.00	1.00
Satd. Flow (prot)	1770	6408	1583	1770	6408	1583	1770	3539	1583	1770	3539	1583
Flt Permitted	0.95	1.00	1.00	0.95	1.00	1.00	0.75	1.00	1.00	0.54	1.00	1.00
Satd. Flow (perm)	1770	6408	1583	1770	6408	1583	1392	3539	1583	997	3539	1583
Volume (vph)	125	2262	55	242	902	202	72	63	138	104	14	28
Peak-hour factor, PHF	0.95	0.95	0.95	0.95	0.95	0.95	0.95	0.95	0.95	0.95	0.95	0.95
Adj. Flow (vph)	132	2381	58	255	949	213	76	66	145	109	15	29
RTOR Reduction (vph)	0	0	27	0	0	68	0	0	0	0	0	21
Lane Group Flow (vph)	132	2381	31	255	949	145	76	66	145	109	15	8
Turn Type	Prot		pm+ov	Prot		pm+ov	pm+pt		Free	pm+pt		pm+ov
Protected Phases	1	6	3	5	2	7	3	8		7	4	1
Permitted Phases			6			2	8		Free	4		4
Actuated Green, G (s)	10.2	50.6	53.8	18.8	58.7	69.2	8.8	5.6	110.0	21.1	12.9	23.1
Effective Green, g (s)	14.2	54.1	59.3	22.3	62.2	74.7	14.3	9.1	110.0	24.6	16.4	30.6
Actuated g/C Ratio	0.13	0.49	0.54	0.20	0.57	0.68	0.13	0.08	1.00	0.22	0.15	0.28
Clearance Time (s)	7.0	6.5	5.0	6.5	6.5	5.0	5.0	6.5		5.0	6.5	7.0
Vehicle Extension (s)	2.0	3.0	2.0	2.0	3.0	2.0	2.0	2.0		2.0	2.0	2.0
Lane Grp Cap (vph)	228	3152	897	359	3623	1118	199	293	1583	311	528	484
v/s Ratio Prot	0.07	c0.37	0.00	c0.14	0.15	0.01	0.02	0.02		c0.04	0.00	0.00
v/s Ratio Perm			0.02			0.08	0.03		0.09	c0.04		0.00
v/c Ratio	0.58	0.76	0.03	0.71	0.26	0.13	0.38	0.23	0.09	0.35	0.03	0.02
Uniform Delay, d1	45.1	22.6	11.9	40.8	12.2	6.2	43.5	47.2	0.0	35.4	40.0	28.8
Progression Factor	1.00	1.00	1.00	1.00	1.00	1.00	1.00	1.00	1.00	1.00	1.00	1.00
Incremental Delay, d2	2.2	1.7	0.0	5.4	0.2	0.0	0.4	0.1	0.1	0.2	0.1	0.0
Delay (s)	47.3	24.3	11.9	46.3	12.4	6.2	43.9	47.3	0.1	35.6	40.1	28.8
Level of Service	D	C	B	D	B	A	D	D	A	D	D	C
Approach Delay (s)		25.2			17.5			22.6			34.8	
Approach LOS		C			B			C			C	

Intersection Summary			
HCM Average Control Delay	22.9	HCM Level of Service	C
HCM Volume to Capacity ratio	0.65		
Actuated Cycle Length (s)	110.0	Sum of lost time (s)	9.0
Intersection Capacity Utilization	68.6%	ICU Level of Service	C
Analysis Period (min)	15		

c Critical Lane Group

Movement	EBL	EBT	EBR	WBL	WBT	WBR	NBL	NBT	NBR	SBL	SBT	SBR
Lane Configurations												
Ideal Flow (vphpl)	1900	1900	1900	1900	1900	1900	1900	1900	1900	1900	1900	1900
Total Lost time (s)	3.0	3.0	3.0	3.0	3.0	3.0	3.0	3.0	3.0	3.0	3.0	3.0
Lane Util. Factor	0.94	0.86	1.00	0.97	0.86	1.00	0.97	0.95	1.00	0.97	0.95	1.00
Frt	1.00	1.00	0.85	1.00	1.00	0.85	1.00	1.00	0.85	1.00	1.00	0.85
Flt Protected	0.95	1.00	1.00	0.95	1.00	1.00	0.95	1.00	1.00	0.95	1.00	1.00
Satd. Flow (prot)	4990	6408	1583	3433	6408	1583	3433	3539	1583	3433	3539	1583
Flt Permitted	0.95	1.00	1.00	0.95	1.00	1.00	0.95	1.00	1.00	0.95	1.00	1.00
Satd. Flow (perm)	4990	6408	1583	3433	6408	1583	3433	3539	1583	3433	3539	1583
Volume (vph)	208	4073	230	438	2447	286	226	5	106	149	53	62
Peak-hour factor, PHF	0.95	0.95	0.95	0.95	0.95	0.95	0.95	0.95	0.95	0.95	0.95	0.95
Adj. Flow (vph)	219	4287	242	461	2576	301	238	5	112	157	56	65
RTOR Reduction (vph)	0	0	88	0	0	0	0	0	0	0	0	0
Lane Group Flow (vph)	219	4287	154	461	2576	301	238	5	112	157	56	65
Turn Type	Prot		Perm	Prot		Free	Prot		Free	Prot		Free
Protected Phases	1	6		5	2		7	4		3	8	
Permitted Phases			6			Free			Free			Free
Actuated Green, G (s)	8.0	88.4	88.4	11.4	91.8	145.0	9.0	1.0	145.0	16.2	8.2	145.0
Effective Green, g (s)	12.0	92.4	92.4	15.4	95.8	145.0	13.0	5.0	145.0	20.2	12.2	145.0
Actuated g/C Ratio	0.08	0.64	0.64	0.11	0.66	1.00	0.09	0.03	1.00	0.14	0.08	1.00
Clearance Time (s)	7.0	7.0	7.0	7.0	7.0		7.0	7.0		7.0	7.0	
Vehicle Extension (s)	2.0	3.0	3.0	2.0	3.0		3.0	3.0		3.0	3.0	
Lane Grp Cap (vph)	413	4083	1009	365	4234	1583	308	122	1583	478	298	1583
v/s Ratio Prot	0.04	c0.67		c0.13	0.40		c0.07	0.00		c0.05	0.02	
v/s Ratio Perm			0.10			c0.19			0.07			0.04
v/c Ratio	0.53	1.05	0.15	1.26	0.61	0.19	0.77	0.04	0.07	0.33	0.19	0.04
Uniform Delay, d1	63.8	26.3	10.6	64.8	14.0	0.0	64.6	67.7	0.0	56.3	61.8	0.0
Progression Factor	1.00	1.00	1.00	1.00	1.00	1.00	1.00	1.00	1.00	1.00	1.00	1.00
Incremental Delay, d2	0.7	29.5	0.3	138.6	0.7	0.3	11.4	0.1	0.1	0.4	0.3	0.0
Delay (s)	64.5	55.8	10.9	203.4	14.6	0.3	76.0	67.8	0.1	56.7	62.1	0.0
Level of Service	E	E	B	F	B	A	E	E	A	E	E	A
Approach Delay (s)		53.9			39.4			51.9			44.5	
Approach LOS		D			D			D			D	

Intersection Summary			
HCM Average Control Delay	48.0	HCM Level of Service	D
HCM Volume to Capacity ratio	0.96		
Actuated Cycle Length (s)	145.0	Sum of lost time (s)	9.0
Intersection Capacity Utilization	94.6%	ICU Level of Service	F
Analysis Period (min)	15		

c Critical Lane Group

Movement	EBL	EBT	EBR	WBL	WBT	WBR	NBL	NBT	NBR	SBL	SBT	SBR
Lane Configurations												
Ideal Flow (vphpl)	1900	1900	1900	1900	1900	1900	1900	1900	1900	1900	1900	1900
Total Lost time (s)	3.0	3.0		3.0	3.0			3.0	3.0		3.0	
Lane Util. Factor	1.00	0.95		1.00	0.95			1.00	1.00		1.00	
Frt	1.00	0.98		1.00	1.00			1.00	0.85		0.91	
Flt Protected	0.95	1.00		0.95	1.00			0.95	1.00		0.99	
Satd. Flow (prot)	1770	3462		1770	3537			1776	1583		1676	
Flt Permitted	0.19	1.00		0.11	1.00			0.72	1.00		0.95	
Satd. Flow (perm)	352	3462		199	3537			1332	1583		1598	
Volume (vph)	24	1104	188	218	1339	7	118	3	144	4	3	14
Peak-hour factor, PHF	0.95	0.95	0.95	0.95	0.95	0.95	0.95	0.95	0.95	0.95	0.95	0.95
Adj. Flow (vph)	25	1162	198	229	1409	7	124	3	152	4	3	15
RTOR Reduction (vph)	0	9	0	0	0	0	0	0	0	0	13	0
Lane Group Flow (vph)	25	1351	0	229	1416	0	0	127	152	0	9	0
Turn Type	Perm			pm+pt			Perm		pm+ov	Perm		
Protected Phases		6		5	2			4	5		8	
Permitted Phases	6			2			4		4	8		
Actuated Green, G (s)	44.9	44.9		61.3	61.3			10.5	21.4		10.5	
Effective Green, g (s)	47.9	47.9		64.3	64.3			13.5	26.9		13.5	
Actuated g/C Ratio	0.57	0.57		0.77	0.77			0.16	0.32		0.16	
Clearance Time (s)	6.0	6.0		5.5	6.0			6.0	5.5		6.0	
Vehicle Extension (s)	4.0	4.0		2.0	4.0			3.0	2.0		3.0	
Lane Grp Cap (vph)	201	1979		404	2714			215	565		257	
v/s Ratio Prot		c0.39		c0.09	0.40				0.04			
v/s Ratio Perm	0.07			0.34				c0.10	0.05		0.01	
v/c Ratio	0.12	0.68		0.57	0.52			0.59	0.27		0.04	
Uniform Delay, d1	8.3	12.6		12.7	3.8			32.6	21.1		29.7	
Progression Factor	1.00	1.00		1.00	1.00			1.00	1.00		1.00	
Incremental Delay, d2	0.4	1.1		1.1	0.2			4.3	0.1		0.1	
Delay (s)	8.7	13.7		13.8	4.0			36.9	21.2		29.7	
Level of Service	A	B		B	A			D	C		C	
Approach Delay (s)		13.6			5.4			28.4			29.7	
Approach LOS		B			A			C			C	

Intersection Summary			
HCM Average Control Delay	10.9	HCM Level of Service	B
HCM Volume to Capacity ratio	0.65		
Actuated Cycle Length (s)	83.8	Sum of lost time (s)	9.0
Intersection Capacity Utilization	73.1%	ICU Level of Service	D
Analysis Period (min)	15		

c Critical Lane Group

Movement	EBL	EBT	WBT	WBR	SBL	SBR
Lane Configurations						
Ideal Flow (vphpl)	1900	1900	1900	1900	1900	1900
Total Lost time (s)	3.0	3.0	3.0	3.0	3.0	3.0
Lane Util. Factor	0.97	0.95	0.91	0.91	0.97	1.00
Frt	1.00	1.00	1.00	0.85	1.00	0.85
Flt Protected	0.95	1.00	1.00	1.00	0.95	1.00
Satd. Flow (prot)	3433	3539	3390	1441	3433	1583
Flt Permitted	0.95	1.00	1.00	1.00	0.95	1.00
Satd. Flow (perm)	3433	3539	3390	1441	3433	1583
Volume (vph)	758	495	536	416	329	618
Peak-hour factor, PHF	0.95	0.95	0.95	0.95	0.95	0.95
Adj. Flow (vph)	798	521	564	438	346	651
RTOR Reduction (vph)	0	0	0	15	0	456
Lane Group Flow (vph)	798	521	564	423	346	195
Turn Type	Prot			pm+ov		Perm
Protected Phases	5	2	6	4	4	
Permitted Phases				6		4
Actuated Green, G (s)	21.2	47.0	18.8	36.1	17.3	17.3
Effective Green, g (s)	25.2	51.0	22.8	44.6	21.8	21.8
Actuated g/C Ratio	0.32	0.65	0.29	0.57	0.28	0.28
Clearance Time (s)	7.0	7.0	7.0	7.5	7.5	7.5
Vehicle Extension (s)	2.0	3.0	3.0	3.0	3.0	3.0
Lane Grp Cap (vph)	1098	2290	981	870	950	438
v/s Ratio Prot	c0.23	0.15	c0.17	c0.13	0.10	
v/s Ratio Perm				0.16		0.12
v/c Ratio	0.73	0.23	0.57	0.49	0.36	0.45
Uniform Delay, d1	23.7	5.8	23.9	10.2	22.9	23.5
Progression Factor	1.00	1.00	1.00	1.00	1.00	1.00
Incremental Delay, d2	2.1	0.1	0.8	0.4	0.2	0.7
Delay (s)	25.8	5.8	24.7	10.7	23.2	24.2
Level of Service	C	A	C	B	C	C
Approach Delay (s)		17.9	18.6		23.9	
Approach LOS		B	B		C	

Intersection Summary			
HCM Average Control Delay	19.9	HCM Level of Service	B
HCM Volume to Capacity ratio	0.59		
Actuated Cycle Length (s)	78.8	Sum of lost time (s)	6.0
Intersection Capacity Utilization	64.2%	ICU Level of Service	C
Analysis Period (min)	15		

c Critical Lane Group

HCM Signalized Intersection Capacity Analysis
24: Pacific Boulevard & Loudoun County Parkway

Kincora
Future Background 2025

Movement	EBL	EBT	EBR	WBL	WBT	WBR	NBL	NBT	NBR	SBL	SBT	SBR
Lane Configurations												
Ideal Flow (vphpl)	1900	1900	1900	1900	1900	1900	1900	1900	1900	1900	1900	1900
Total Lost time (s)	4.0		4.0	4.0		4.0	4.0	4.0	4.0	4.0	4.0	4.0
Lane Util. Factor	0.97		1.00	0.97		0.88	0.97	0.95	1.00	0.97	0.95	1.00
Frt	1.00		0.85	1.00		0.85	1.00	1.00	0.85	1.00	1.00	0.85
Flt Protected	0.95		1.00	0.95		1.00	0.95	1.00	1.00	0.95	1.00	1.00
Satd. Flow (prot)	3433		1583	3433		2787	3433	3539	1583	3433	3539	1583
Flt Permitted	0.95		1.00	0.95		1.00	0.95	1.00	1.00	0.95	1.00	1.00
Satd. Flow (perm)	3433		1583	3433		2787	3433	3539	1583	3433	3539	1583
Volume (vph)	139	0	258	15	0	46	509	1415	113	338	1217	237
Peak-hour factor, PHF	0.95	0.95	0.95	0.95	0.95	0.95	0.95	0.95	0.95	0.95	0.95	0.95
Adj. Flow (vph)	146	0	272	16	0	48	536	1489	119	356	1281	249
RTOR Reduction (vph)	0	0	0	0	0	0	0	0	47	0	0	80
Lane Group Flow (vph)	146	0	272	16	0	48	536	1489	72	356	1281	169
Turn Type	Prot		Free	Prot		Free	Prot		pm+ov	Prot		pm+ov
Protected Phases	7	4		3	8		5	2	3	1	6	7
Permitted Phases			Free			Free			2			6
Actuated Green, G (s)	15.0		90.4	5.4		90.4	17.2	43.4	48.8	13.0	39.2	54.2
Effective Green, g (s)	16.0		90.4	6.4		90.4	20.2	46.4	52.8	16.0	42.2	58.2
Actuated g/C Ratio	0.18		1.00	0.07		1.00	0.22	0.51	0.58	0.18	0.47	0.64
Clearance Time (s)	5.0			5.0			7.0	7.0	5.0	7.0	7.0	5.0
Vehicle Extension (s)	2.0			2.0			2.0	3.0	2.0	2.0	3.0	2.0
Lane Grp Cap (vph)	608		1583	243		2787	767	1816	995	608	1652	1089
v/s Ratio Prot	c0.04			0.00			c0.16	c0.42	0.01	0.10	0.36	0.03
v/s Ratio Perm			0.17			0.02			0.04			0.08
v/c Ratio	0.24		0.17	0.07		0.02	0.70	0.82	0.07	0.59	0.78	0.16
Uniform Delay, d1	32.0		0.0	39.2		0.0	32.3	18.5	8.2	34.2	20.1	6.4
Progression Factor	1.00		1.00	1.00		1.00	1.00	1.00	1.00	1.00	1.00	1.00
Incremental Delay, d2	0.1		0.2	0.0		0.0	2.3	3.0	0.0	0.9	2.3	0.0
Delay (s)	32.0		0.2	39.3		0.0	34.6	21.5	8.2	35.1	22.5	6.4
Level of Service	C		A	D		A	C	C	A	D	C	A
Approach Delay (s)		11.3			9.8			24.0			22.7	
Approach LOS		B			A			C			C	

Intersection Summary			
HCM Average Control Delay	22.1	HCM Level of Service	C
HCM Volume to Capacity ratio	0.66		
Actuated Cycle Length (s)	90.4	Sum of lost time (s)	8.0
Intersection Capacity Utilization	69.4%	ICU Level of Service	C
Analysis Period (min)	15		

c Critical Lane Group

HCM Unsignalized Intersection Capacity Analysis
25: Pacific Boulevard & Richfield Way

Kincora
Future Background 2025

Movement	EBL	EBT	EBR	WBL	WBT	WBR	NBL	NBT	NBR	SBL	SBT	SBR
Lane Configurations												
Sign Control		Free			Free			Stop			Stop	
Grade		0%			0%			0%			0%	
Volume (veh/h)	0	450	0	0	165	0	0	0	0	0	0	0
Peak Hour Factor	0.92	0.92	0.92	0.92	0.92	0.92	0.92	0.92	0.92	0.92	0.92	0.92
Hourly flow rate (vph)	0	489	0	0	179	0	0	0	0	0	0	0
Pedestrians												
Lane Width (ft)												
Walking Speed (ft/s)												
Percent Blockage												
Right turn flare (veh)												
Median type								None			None	
Median storage veh)												
Upstream signal (ft)												
pX, platoon unblocked												
vC, conflicting volume	179			489			579	668	245	424	668	90
vC1, stage 1 conf vol												
vC2, stage 2 conf vol												
vCu, unblocked vol	179			489			579	668	245	424	668	90
tC, single (s)	4.1			4.1			7.5	6.5	6.9	7.5	6.5	6.9
tC, 2 stage (s)												
tF (s)	2.2			2.2			3.5	4.0	3.3	3.5	4.0	3.3
p0 queue free %	100			100			100	100	100	100	100	100
cM capacity (veh/h)	1394			1070			398	377	756	514	377	950

Direction, Lane #	EB 1	EB 2	EB 3	EB 4	WB 1	WB 2	WB 3	WB 4	NB 1	NB 2	SB 1	SB 2
Volume Total	0	245	245	0	0	90	90	0	0	0	0	0
Volume Left	0	0	0	0	0	0	0	0	0	0	0	0
Volume Right	0	0	0	0	0	0	0	0	0	0	0	0
cSH	1700	1700	1700	1700	1700	1700	1700	1700	1700	1700	1700	1700
Volume to Capacity	0.00	0.14	0.14	0.00	0.00	0.05	0.05	0.00	0.00	0.00	0.00	0.00
Queue Length 95th (ft)	0	0	0	0	0	0	0	0	0	0	0	0
Control Delay (s)	0.0	0.0	0.0	0.0	0.0	0.0	0.0	0.0	0.0	0.0	0.0	0.0
Lane LOS									A	A	A	A
Approach Delay (s)	0.0				0.0				0.0		0.0	
Approach LOS									A		A	

Intersection Summary			
Average Delay	0.0		
Intersection Capacity Utilization	15.8%	ICU Level of Service	A
Analysis Period (min)	15		

Movement	EBL	EBT	WBT	WBR	SWL	SWR
Lane Configurations		↑↑	↑↑			↱↱
Sign Control		Free	Free		Stop	
Grade		0%	0%		0%	
Volume (veh/h)	0	0	0	0	0	0
Peak Hour Factor	0.95	0.95	0.95	0.95	0.95	0.95
Hourly flow rate (vph)	0	0	0	0	0	0
Pedestrians						
Lane Width (ft)						
Walking Speed (ft/s)						
Percent Blockage						
Right turn flare (veh)						
Median type					None	
Median storage veh)						
Upstream signal (ft)						
pX, platoon unblocked						
vC, conflicting volume	0				0	0
vC1, stage 1 conf vol						
vC2, stage 2 conf vol						
vCu, unblocked vol	0				0	0
tC, single (s)	4.1				6.8	6.9
tC, 2 stage (s)						
tF (s)	2.2				3.5	3.3
p0 queue free %	100				100	100
cM capacity (veh/h)	1622				1023	1084

Direction, Lane #	EB 1	EB 2	WB 1	WB 2	SW 1	SW 2
Volume Total	0	0	0	0	0	0
Volume Left	0	0	0	0	0	0
Volume Right	0	0	0	0	0	0
cSH	1700	1700	1700	1700	1700	1700
Volume to Capacity	0.00	0.00	0.00	0.00	0.00	0.00
Queue Length 95th (ft)	0	0	0	0	0	0
Control Delay (s)	0.0	0.0	0.0	0.0	0.0	0.0
Lane LOS					A	A
Approach Delay (s)	0.0		0.0		0.0	
Approach LOS					A	

Intersection Summary			
Average Delay	0.0		
Intersection Capacity Utilization	0.0%	ICU Level of Service	A
Analysis Period (min)	15		

HCM Signalized Intersection Capacity Analysis
5: Route 7 & Countryside Blvd.

Kincora
Future Background 2025

Movement	EBL	EBT	EBR	WBL	WBT	WBR	NBL	NBT	NBR	SBL	SBT	SBR
Lane Configurations												
Ideal Flow (vphpl)	1900	1900	1900	1900	1900	1900	1900	1900	1900	1900	1900	1900
Total Lost time (s)	3.0	3.0	3.0	3.0	3.0	3.0	3.0	3.0	3.0	3.0	3.0	3.0
Lane Util. Factor	0.97	0.86	1.00	0.97	0.86	1.00	0.97	0.95	1.00	0.97	0.95	1.00
Frt	1.00	1.00	0.85	1.00	1.00	0.85	1.00	1.00	0.85	1.00	1.00	0.85
Flt Protected	0.95	1.00	1.00	0.95	1.00	1.00	0.95	1.00	1.00	0.95	1.00	1.00
Satd. Flow (prot)	3433	6408	1583	3433	6408	1583	3433	3539	1583	3433	3539	1583
Flt Permitted	0.95	1.00	1.00	0.95	1.00	1.00	0.95	1.00	1.00	0.95	1.00	1.00
Satd. Flow (perm)	3433	6408	1583	3433	6408	1583	3433	3539	1583	3433	3539	1583
Volume (vph)	591	2943	175	651	2730	214	286	148	413	186	163	333
Peak-hour factor, PHF	0.95	0.95	0.95	0.95	0.95	0.95	0.95	0.95	0.95	0.95	0.95	0.95
Adj. Flow (vph)	622	3098	184	685	2874	225	301	156	435	196	172	351
RTOR Reduction (vph)	0	0	0	0	0	11	0	0	0	0	0	1
Lane Group Flow (vph)	622	3098	184	685	2874	214	301	156	435	196	172	350
Turn Type	Prot		Free	Prot		pm+ov	Prot		Free	Prot		pm+ov
Protected Phases	1	6		5	2	3	7	4		3	8	1
Permitted Phases			Free			2			Free			8
Actuated Green, G (s)	24.7	68.1	140.0	27.1	70.5	80.2	8.0	7.1	140.0	9.7	8.8	33.5
Effective Green, g (s)	28.7	72.1	140.0	31.1	74.5	88.2	12.0	11.1	140.0	13.7	12.8	41.5
Actuated g/C Ratio	0.20	0.51	1.00	0.22	0.53	0.63	0.09	0.08	1.00	0.10	0.09	0.30
Clearance Time (s)	7.0	7.0		7.0	7.0	7.0	7.0	7.0		7.0	7.0	7.0
Vehicle Extension (s)	2.0	2.0		3.0	2.0	2.0	2.0	2.0		2.0	2.0	2.0
Lane Grp Cap (vph)	704	3300	1583	763	3410	1031	294	281	1583	336	324	503
v/s Ratio Prot	0.18	c0.48		c0.20	0.45	0.02	c0.09	0.04		0.06	0.05	c0.14
v/s Ratio Perm			0.12			0.11			c0.27			0.08
v/c Ratio	0.88	0.94	0.12	0.90	0.84	0.21	1.02	0.56	0.27	0.58	0.53	0.70
Uniform Delay, d1	54.0	31.9	0.0	52.9	27.8	11.0	64.0	62.1	0.0	60.4	60.7	43.7
Progression Factor	1.00	1.00	1.00	1.00	1.00	1.00	1.00	1.00	1.00	1.00	1.00	1.00
Incremental Delay, d2	12.3	6.7	0.1	13.3	2.7	0.0	58.7	1.3	0.4	1.7	0.8	3.4
Delay (s)	66.3	38.6	0.1	66.2	30.5	11.1	122.7	63.4	0.4	62.1	61.6	47.0
Level of Service	E	D	A	E	C	B	F	E	A	E	E	D
Approach Delay (s)		41.2			35.8			52.7			54.6	
Approach LOS		D			D			D			D	

Intersection Summary			
HCM Average Control Delay	41.2	HCM Level of Service	D
HCM Volume to Capacity ratio	0.89		
Actuated Cycle Length (s)	140.0	Sum of lost time (s)	9.0
Intersection Capacity Utilization	87.7%	ICU Level of Service	E
Analysis Period (min)	15		

c Critical Lane Group

HCM Signalized Intersection Capacity Analysis
6: Route 7 & Palisade Parkway

Kincora
Future Background 2025

Movement	EBL	EBT	EBR	WBL	WBT	WBR	NBL	NBT	NBR	SBL	SBT	SBR
Lane Configurations												
Ideal Flow (vphpl)	1900	1900	1900	1900	1900	1900	1900	1900	1900	1900	1900	1900
Total Lost time (s)	3.0	3.0	3.0	3.0	3.0	3.0	3.0	3.0	3.0	3.0	3.0	3.0
Lane Util. Factor	0.97	0.86	1.00	1.00	0.86	1.00	0.97	1.00	1.00	0.97	1.00	1.00
Frt	1.00	1.00	0.85	1.00	1.00	0.85	1.00	1.00	0.85	1.00	1.00	0.85
Flt Protected	0.95	1.00	1.00	0.95	1.00	1.00	0.95	1.00	1.00	0.95	1.00	1.00
Satd. Flow (prot)	3433	6408	1583	1770	6408	1583	3433	1863	1583	3433	1863	1583
Flt Permitted	0.95	1.00	1.00	0.95	1.00	1.00	0.95	1.00	1.00	0.95	1.00	1.00
Satd. Flow (perm)	3433	6408	1583	1770	6408	1583	3433	1863	1583	3433	1863	1583
Volume (vph)	263	3124	25	74	2934	161	391	97	234	225	77	234
Peak-hour factor, PHF	0.95	0.95	0.95	0.95	0.95	0.95	0.95	0.95	0.95	0.95	0.95	0.95
Adj. Flow (vph)	277	3288	26	78	3088	169	412	102	246	237	81	246
RTOR Reduction (vph)	0	0	0	0	0	0	0	0	8	0	0	4
Lane Group Flow (vph)	277	3288	26	78	3088	169	412	102	238	237	81	242
Turn Type	Prot		Free	Prot		Free	Prot		pm+ov	Prot		pm+ov
Protected Phases	1	6		5	2		7	4	5	3	8	1
Permitted Phases			Free			Free			4			8
Actuated Green, G (s)	11.5	63.0	120.0	8.1	59.6	120.0	16.9	10.9	19.0	10.0	4.0	15.5
Effective Green, g (s)	15.5	67.0	120.0	12.1	63.6	120.0	20.9	14.9	27.0	14.0	8.0	23.5
Actuated g/C Ratio	0.13	0.56	1.00	0.10	0.53	1.00	0.17	0.12	0.22	0.12	0.07	0.20
Clearance Time (s)	7.0	7.0		7.0	7.0		7.0	7.0	7.0	7.0	7.0	7.0
Vehicle Extension (s)	2.0	4.0		2.0	4.0		3.0	3.0	2.0	3.0	3.0	2.0
Lane Grp Cap (vph)	443	3578	1583	178	3396	1583	598	231	396	401	124	350
v/s Ratio Prot	0.08	c0.51		0.04	0.48		c0.12	0.05	c0.06	0.07	0.04	c0.09
v/s Ratio Perm			0.02			0.11			0.09			0.06
v/c Ratio	0.63	0.92	0.02	0.44	0.91	0.11	0.69	0.44	0.60	0.59	0.65	0.69
Uniform Delay, d1	49.5	24.0	0.0	50.8	25.6	0.0	46.5	48.7	41.7	50.3	54.6	44.9
Progression Factor	1.00	1.00	1.00	1.00	1.00	1.00	1.00	1.00	1.00	1.00	1.00	1.00
Incremental Delay, d2	2.0	5.0	0.0	0.6	4.8	0.1	3.3	1.3	1.8	2.3	11.7	4.7
Delay (s)	51.5	29.1	0.0	51.4	30.3	0.1	49.8	50.0	43.4	52.6	66.3	49.6
Level of Service	D	C	A	D	C	A	D	D	D	D	E	D
Approach Delay (s)		30.6			29.3			47.8			53.3	
Approach LOS		C			C			D			D	

Intersection Summary			
HCM Average Control Delay	33.2	HCM Level of Service	C
HCM Volume to Capacity ratio	0.81		
Actuated Cycle Length (s)	120.0	Sum of lost time (s)	3.0
Intersection Capacity Utilization	78.2%	ICU Level of Service	D
Analysis Period (min)	15		

c Critical Lane Group

Movement	WBL	WBR	NBT	NBR	SBL	SBT
Lane Configurations						
Ideal Flow (vphpl)	1900	1900	1900	1900	1900	1900
Total Lost time (s)	3.0	3.0	3.0		3.0	3.0
Lane Util. Factor	1.00	1.00	0.95		1.00	0.95
Frt	1.00	0.85	0.98		1.00	1.00
Flt Protected	0.95	1.00	1.00		0.95	1.00
Satd. Flow (prot)	1770	1583	3465		1770	3539
Flt Permitted	0.95	1.00	1.00		0.19	1.00
Satd. Flow (perm)	1770	1583	3465		356	3539
Volume (vph)	112	262	717	117	250	587
Peak-hour factor, PHF	0.95	0.95	0.95	0.95	0.95	0.95
Adj. Flow (vph)	118	276	755	123	263	618
RTOR Reduction (vph)	0	84	11	0	0	0
Lane Group Flow (vph)	118	192	867	0	263	618
Turn Type		pm+ov			pm+pt	
Protected Phases	4	1	2		1	6
Permitted Phases		4			6	
Actuated Green, G (s)	7.0	15.7	20.1		35.8	35.8
Effective Green, g (s)	11.0	23.7	24.6		40.3	40.3
Actuated g/C Ratio	0.19	0.41	0.43		0.70	0.70
Clearance Time (s)	7.0	7.0	7.5		7.0	7.5
Vehicle Extension (s)	2.0	2.0	2.0		2.0	2.0
Lane Grp Cap (vph)	340	738	1488		564	2489
v/s Ratio Prot	c0.07	0.06	c0.25		c0.10	0.17
v/s Ratio Perm		0.06			0.22	
v/c Ratio	0.35	0.26	0.58		0.47	0.25
Uniform Delay, d1	20.0	11.0	12.4		4.9	3.1
Progression Factor	1.00	1.00	1.00		1.00	1.00
Incremental Delay, d2	0.2	0.1	0.4		0.2	0.0
Delay (s)	20.3	11.1	12.8		5.2	3.1
Level of Service	C	B	B		A	A
Approach Delay (s)	13.8		12.8			3.7
Approach LOS	B		B			A

Intersection Summary			
HCM Average Control Delay	9.3	HCM Level of Service	A
HCM Volume to Capacity ratio	0.50		
Actuated Cycle Length (s)	57.3	Sum of lost time (s)	9.0
Intersection Capacity Utilization	53.6%	ICU Level of Service	A
Analysis Period (min)	15		

c Critical Lane Group

Movement	EBL	EBT	EBR	WBL	WBT	WBR	NBL	NBT	NBR	SBL	SBT	SBR
Lane Configurations												
Ideal Flow (vphpl)	1900	1900	1900	1900	1900	1900	1900	1900	1900	1900	1900	1900
Total Lost time (s)		4.0	4.0		4.0	4.0	4.0	4.0	4.0	4.0	4.0	4.0
Lane Util. Factor		1.00	1.00		1.00	1.00	1.00	0.95	1.00	1.00	0.95	1.00
Frt		1.00	0.85		1.00	0.85	1.00	1.00	0.85	1.00	1.00	0.85
Flt Protected		0.96	1.00		0.95	1.00	0.95	1.00	1.00	0.95	1.00	1.00
Satd. Flow (prot)		1779	1583		1770	1583	1770	3539	1583	1770	3539	1583
Flt Permitted		0.71	1.00		0.74	1.00	0.38	1.00	1.00	0.30	1.00	1.00
Satd. Flow (perm)		1323	1583		1370	1583	709	3539	1583	568	3539	1583
Volume (vph)	29	2	82	37	0	30	148	855	83	29	592	72
Peak-hour factor, PHF	0.95	0.95	0.95	0.95	0.95	0.95	0.95	0.95	0.95	0.95	0.95	0.95
Adj. Flow (vph)	31	2	86	39	0	32	156	900	87	31	623	76
RTOR Reduction (vph)	0	0	70	0	0	27	0	0	25	0	0	24
Lane Group Flow (vph)	0	33	16	0	39	5	156	900	62	31	623	52
Turn Type	Perm		pm+ov	Perm		pm+ov	pm+pt		Perm	pm+pt		Perm
Protected Phases		4	5		8	1	5	2		1	6	
Permitted Phases	4		4	8		8	2		2	6		6
Actuated Green, G (s)		4.9	10.9		4.9	7.9	67.1	61.1	61.1	61.1	58.1	58.1
Effective Green, g (s)		7.9	16.9		7.9	13.9	73.1	64.1	64.1	67.1	61.1	61.1
Actuated g/C Ratio		0.09	0.19		0.09	0.15	0.81	0.71	0.71	0.75	0.68	0.68
Clearance Time (s)		7.0	7.0		7.0	7.0	7.0	7.0	7.0	7.0	7.0	7.0
Vehicle Extension (s)		2.0	2.0		2.0	2.0	2.0	2.0	2.0	2.0	2.0	2.0
Lane Grp Cap (vph)		116	368		120	315	682	2521	1127	504	2403	1075
v/s Ratio Prot			0.00			0.00	c0.02	c0.25		0.00	0.18	
v/s Ratio Perm		0.02	0.01		c0.03	0.00	0.16		0.04	0.04		0.03
v/c Ratio		0.28	0.04		0.33	0.02	0.23	0.36	0.05	0.06	0.26	0.05
Uniform Delay, d1		38.4	29.9		38.5	32.3	1.9	5.0	3.9	3.0	5.6	4.8
Progression Factor		1.00	1.00		1.00	1.00	1.00	1.00	1.00	1.00	1.00	1.00
Incremental Delay, d2		0.5	0.0		0.6	0.0	0.1	0.4	0.1	0.0	0.3	0.1
Delay (s)		38.9	30.0		39.1	32.3	2.0	5.4	4.0	3.0	5.9	4.9
Level of Service		D	C		D	C	A	A	A	A	A	A
Approach Delay (s)		32.4			36.0			4.8			5.7	
Approach LOS		C			D			A			A	

Intersection Summary			
HCM Average Control Delay	7.8	HCM Level of Service	A
HCM Volume to Capacity ratio	0.35		
Actuated Cycle Length (s)	90.0	Sum of lost time (s)	12.0
Intersection Capacity Utilization	45.7%	ICU Level of Service	A
Analysis Period (min)	15		

c Critical Lane Group

Movement	EBL	EBT	EBR	WBL	WBT	WBR	NBL	NBT	NBR	SBL	SBT	SBR
Lane Configurations												
Ideal Flow (vphpl)	1900	1900	1900	1900	1900	1900	1900	1900	1900	1900	1900	1900
Total Lost time (s)	3.0	3.0	3.0	3.0	3.0	3.0	3.0	3.0	3.0	3.0	3.0	3.0
Lane Util. Factor	1.00	0.95	1.00	0.97	0.95	1.00	0.97	0.95	1.00	0.97	0.95	1.00
Frt	1.00	1.00	0.85	1.00	1.00	0.85	1.00	1.00	0.85	1.00	1.00	0.85
Flt Protected	0.95	1.00	1.00	0.95	1.00	1.00	0.95	1.00	1.00	0.95	1.00	1.00
Satd. Flow (prot)	1770	3539	1583	3433	3539	1583	3433	3539	1583	3433	3539	1583
Flt Permitted	0.95	1.00	1.00	0.95	1.00	1.00	0.95	1.00	1.00	0.95	1.00	1.00
Satd. Flow (perm)	1770	3539	1583	3433	3539	1583	3433	3539	1583	3433	3539	1583
Volume (vph)	205	454	220	191	704	306	334	902	146	164	876	390
Peak-hour factor, PHF	0.95	0.95	0.95	0.95	0.95	0.95	0.95	0.95	0.95	0.95	0.95	0.95
Adj. Flow (vph)	216	478	232	201	741	322	352	949	154	173	922	411
RTOR Reduction (vph)	0	0	0	0	0	0	0	0	0	0	0	0
Lane Group Flow (vph)	216	478	232	201	741	322	352	949	154	173	922	411
Turn Type	Prot		Free	Prot		Free	Prot		Free	Prot		Free
Protected Phases	7	4		3	8		5	2		1	6	
Permitted Phases			Free			Free			Free			Free
Actuated Green, G (s)	18.4	32.3	138.7	13.4	27.3	138.7	17.8	52.7	138.7	12.3	47.2	138.7
Effective Green, g (s)	22.4	36.3	138.7	17.4	31.3	138.7	21.8	56.7	138.7	16.3	51.2	138.7
Actuated g/C Ratio	0.16	0.26	1.00	0.13	0.23	1.00	0.16	0.41	1.00	0.12	0.37	1.00
Clearance Time (s)	7.0	7.0		7.0	7.0		7.0	7.0		7.0	7.0	
Vehicle Extension (s)	3.0	3.0		3.0	3.0		3.0	5.0		3.0	5.0	
Lane Grp Cap (vph)	286	926	1583	431	799	1583	540	1447	1583	403	1306	1583
v/s Ratio Prot	c0.12	0.14		0.06	c0.21		c0.10	0.27		0.05	c0.26	
v/s Ratio Perm			0.15			0.20			0.10			0.26
v/c Ratio	0.76	0.52	0.15	0.47	0.93	0.20	0.65	0.66	0.10	0.43	0.71	0.26
Uniform Delay, d1	55.5	43.7	0.0	56.3	52.6	0.0	54.9	33.1	0.0	56.9	37.3	0.0
Progression Factor	1.00	1.00	1.00	1.00	1.00	1.00	1.00	1.00	1.00	1.00	1.00	1.00
Incremental Delay, d2	10.8	0.5	0.2	0.8	16.6	0.3	2.8	1.5	0.1	0.7	2.2	0.4
Delay (s)	66.3	44.2	0.2	57.1	69.2	0.3	57.7	34.6	0.1	57.6	39.5	0.4
Level of Service	E	D	A	E	E	A	E	C	A	E	D	A
Approach Delay (s)		38.3			49.7			36.5			30.9	
Approach LOS		D			D			D			C	

Intersection Summary			
HCM Average Control Delay	38.5	HCM Level of Service	D
HCM Volume to Capacity ratio	0.76		
Actuated Cycle Length (s)	138.7	Sum of lost time (s)	12.0
Intersection Capacity Utilization	77.9%	ICU Level of Service	D
Analysis Period (min)	15		

c Critical Lane Group

Movement	EBL	EBR	NBL	NBT	SBT	SBR
Lane Configurations						
Ideal Flow (vphpl)	1900	1900	1900	1900	1900	1900
Total Lost time (s)	4.0		4.0	4.0	4.0	
Lane Util. Factor	0.97		1.00	0.95	0.95	
Frt	0.97		1.00	1.00	0.99	
Flt Protected	0.96		0.95	1.00	1.00	
Satd. Flow (prot)	3367		1770	3539	3514	
Flt Permitted	0.96		0.05	1.00	1.00	
Satd. Flow (perm)	3367		91	3539	3514	
Volume (vph)	204	54	57	2013	2006	101
Peak-hour factor, PHF	0.95	0.95	0.95	0.95	0.95	0.95
Adj. Flow (vph)	215	57	60	2119	2112	106
RTOR Reduction (vph)	20	0	0	0	3	0
Lane Group Flow (vph)	252	0	60	2119	2215	0
Turn Type			pm+pt			
Protected Phases	4		5	2	6	
Permitted Phases			2			
Actuated Green, G (s)	11.5		84.4	84.4	74.5	
Effective Green, g (s)	14.5		87.4	87.4	77.5	
Actuated g/C Ratio	0.13		0.80	0.80	0.71	
Clearance Time (s)	7.0		7.0	7.0	7.0	
Vehicle Extension (s)	4.0		2.0	3.0	3.0	
Lane Grp Cap (vph)	444		163	2814	2478	
v/s Ratio Prot	c0.07		0.02	c0.60	c0.63	
v/s Ratio Perm			0.27			
v/c Ratio	0.57		0.37	0.75	0.89	
Uniform Delay, d1	44.8		22.1	5.7	12.9	
Progression Factor	1.00		1.00	1.00	1.00	
Incremental Delay, d2	5.2		0.5	1.2	4.6	
Delay (s)	49.9		22.6	6.9	17.5	
Level of Service	D		C	A	B	
Approach Delay (s)	49.9			7.4	17.5	
Approach LOS	D			A	B	

Intersection Summary			
HCM Average Control Delay	14.7	HCM Level of Service	B
HCM Volume to Capacity ratio	0.85		
Actuated Cycle Length (s)	109.9	Sum of lost time (s)	12.0
Intersection Capacity Utilization	73.7%	ICU Level of Service	D
Analysis Period (min)	15		

c Critical Lane Group

Movement	EBL	EBT	EBR	WBL	WBT	WBR	NBL	NBT	NBR	SBL	SBT	SBR
Lane Configurations												
Ideal Flow (vphpl)	1900	1900	1900	1900	1900	1900	1900	1900	1900	1900	1900	1900
Total Lost time (s)	4.0	4.0	4.0	3.0	4.0	3.0	4.0	3.0	3.0	3.0	3.0	4.0
Lane Util. Factor	0.97	0.95	1.00	0.97	0.95	1.00	0.97	0.95	1.00	0.97	0.95	1.00
Frt	1.00	1.00	0.85	1.00	1.00	0.85	1.00	1.00	0.85	1.00	1.00	0.85
Flt Protected	0.95	1.00	1.00	0.95	1.00	1.00	0.95	1.00	1.00	0.95	1.00	1.00
Satd. Flow (prot)	3433	3539	1583	3433	3539	1583	3433	3539	1583	3433	3539	1583
Flt Permitted	0.95	1.00	1.00	0.95	1.00	1.00	0.95	1.00	1.00	0.95	1.00	1.00
Satd. Flow (perm)	3433	3539	1583	3433	3539	1583	3433	3539	1583	3433	3539	1583
Volume (vph)	458	763	433	223	643	93	1129	346	287	83	206	602
Peak-hour factor, PHF	0.95	0.95	0.95	0.95	0.95	0.95	0.95	0.95	0.95	0.95	0.95	0.95
Adj. Flow (vph)	482	803	456	235	677	98	1188	364	302	87	217	634
RTOR Reduction (vph)	0	0	0	0	0	0	0	0	34	0	0	0
Lane Group Flow (vph)	482	803	456	235	677	98	1188	364	268	87	217	634
Turn Type	Prot		Free	Prot		Free	Prot		pm+ov	Prot		Free
Protected Phases	1	6		5	2		7	4	5	3	8	
Permitted Phases			Free			Free			4			Free
Actuated Green, G (s)	11.5	21.0	100.0	8.1	17.6	100.0	36.0	39.4	47.5	4.0	7.4	100.0
Effective Green, g (s)	14.5	24.0	100.0	12.1	20.6	100.0	39.0	42.9	55.0	8.0	10.9	100.0
Actuated g/C Ratio	0.14	0.24	1.00	0.12	0.21	1.00	0.39	0.43	0.55	0.08	0.11	1.00
Clearance Time (s)	7.0	7.0		7.0	7.0		7.0	6.5	7.0	7.0	6.5	
Vehicle Extension (s)	2.5	4.0		2.5	4.0		2.5	2.5	2.5	2.5	2.5	
Lane Grp Cap (vph)	498	849	1583	415	729	1583	1339	1518	918	275	386	1583
v/s Ratio Prot	c0.14	c0.23		0.07	0.19		c0.35	0.10	0.04	0.03	c0.06	
v/s Ratio Perm			0.29			0.06			0.13			c0.40
v/c Ratio	0.97	0.95	0.29	0.57	0.93	0.06	0.89	0.24	0.29	0.32	0.56	0.40
Uniform Delay, d1	42.5	37.4	0.0	41.5	39.0	0.0	28.4	18.2	12.1	43.4	42.3	0.0
Progression Factor	1.00	1.00	1.00	1.00	1.00	1.00	1.00	1.00	1.00	1.00	1.00	1.00
Incremental Delay, d2	31.8	20.2	0.5	1.4	19.9	0.1	7.4	0.1	0.1	0.5	1.5	0.8
Delay (s)	74.4	57.6	0.5	42.9	58.8	0.1	35.9	18.2	12.2	43.9	43.8	0.8
Level of Service	E	E	A	D	E	A	D	B	B	D	D	A
Approach Delay (s)		47.3			49.4			28.5			14.7	
Approach LOS		D			D			C			B	

Intersection Summary			
HCM Average Control Delay	35.9	HCM Level of Service	D
HCM Volume to Capacity ratio	0.86		
Actuated Cycle Length (s)	100.0	Sum of lost time (s)	11.0
Intersection Capacity Utilization	82.1%	ICU Level of Service	E
Analysis Period (min)	15		
c Critical Lane Group			

Movement	EBL	EBT	EBR	WBL	WBT	WBR	NBL	NBT	NBR	SBL	SBT	SBR
Lane Configurations												
Ideal Flow (vphpl)	1900	1900	1900	1900	1900	1900	1900	1900	1900	1900	1900	1900
Total Lost time (s)	3.0	3.0	3.0	3.0	3.0	3.0	3.0	3.0	3.0	3.0	3.0	3.0
Lane Util. Factor	0.97	0.95	1.00	0.97	0.95	1.00	0.97	0.95	1.00	1.00	0.95	1.00
Frt	1.00	1.00	0.85	1.00	1.00	0.85	1.00	1.00	0.85	1.00	1.00	0.85
Flt Protected	0.95	1.00	1.00	0.95	1.00	1.00	0.95	1.00	1.00	0.95	1.00	1.00
Satd. Flow (prot)	3433	3539	1583	3433	3539	1583	3433	3539	1583	1770	3539	1583
Flt Permitted	0.95	1.00	1.00	0.95	1.00	1.00	0.95	1.00	1.00	0.95	1.00	1.00
Satd. Flow (perm)	3433	3539	1583	3433	3539	1583	3433	3539	1583	1770	3539	1583
Volume (vph)	329	617	260	238	233	33	244	1406	298	4	1004	258
Peak-hour factor, PHF	0.95	0.95	0.95	0.95	0.95	0.95	0.95	0.95	0.95	0.95	0.95	0.95
Adj. Flow (vph)	346	649	274	251	245	35	257	1480	314	4	1057	272
RTOR Reduction (vph)	0	0	139	0	0	28	0	0	103	0	0	150
Lane Group Flow (vph)	346	649	135	251	245	7	257	1480	211	4	1057	122
Turn Type	Prot		Perm	Prot		Perm	Prot		Perm	Prot		Perm
Protected Phases	7	4		3	8		1	6		5	2	
Permitted Phases			4			8			6			2
Actuated Green, G (s)	15.5	24.5	24.5	10.2	19.2	19.2	11.7	63.8	63.8	1.8	53.9	53.9
Effective Green, g (s)	19.5	29.5	29.5	14.2	24.2	24.2	15.7	68.3	68.3	5.8	58.4	58.4
Actuated g/C Ratio	0.15	0.23	0.23	0.11	0.19	0.19	0.12	0.53	0.53	0.04	0.45	0.45
Clearance Time (s)	7.0	8.0	8.0	7.0	8.0	8.0	7.0	7.5	7.5	7.0	7.5	7.5
Vehicle Extension (s)	3.0	3.0	3.0	3.0	3.0	3.0	3.0	3.0	3.0	3.0	3.0	3.0
Lane Grp Cap (vph)	516	804	360	376	660	295	415	1862	833	79	1592	712
v/s Ratio Prot	c0.10	c0.18		0.07	0.07		c0.07	c0.42		0.00	0.30	
v/s Ratio Perm			0.09			0.00			0.13			0.08
v/c Ratio	0.67	0.81	0.37	0.67	0.37	0.02	0.62	0.79	0.25	0.05	0.66	0.17
Uniform Delay, d1	52.1	47.5	42.4	55.5	46.1	43.1	54.2	25.0	16.8	59.4	28.0	21.3
Progression Factor	1.00	1.00	1.00	1.00	1.00	1.00	1.00	1.00	1.00	1.00	1.00	1.00
Incremental Delay, d2	3.4	6.0	0.7	4.4	0.4	0.0	2.7	2.4	0.2	0.3	1.1	0.1
Delay (s)	55.5	53.4	43.0	60.0	46.5	43.2	57.0	27.5	17.0	59.6	29.1	21.4
Level of Service	E	D	D	E	D	D	E	C	B	E	C	C
Approach Delay (s)		51.8			52.7			29.6			27.6	
Approach LOS		D			D			C			C	

Intersection Summary			
HCM Average Control Delay	36.9	HCM Level of Service	D
HCM Volume to Capacity ratio	0.77		
Actuated Cycle Length (s)	129.8	Sum of lost time (s)	9.0
Intersection Capacity Utilization	85.9%	ICU Level of Service	E
Analysis Period (min)	15		
c Critical Lane Group			

Movement	EBL	EBR	NBL	NBT	SBT	SBR
Lane Configurations						
Ideal Flow (vphpl)	1900	1900	1900	1900	1900	1900
Total Lost time (s)	3.0	3.0	3.0	3.0	3.0	3.0
Lane Util. Factor	1.00	1.00	1.00	0.95	0.95	1.00
Frt	1.00	0.85	1.00	1.00	1.00	0.85
Flt Protected	0.95	1.00	0.95	1.00	1.00	1.00
Satd. Flow (prot)	1770	1583	1770	3539	3539	1583
Flt Permitted	0.95	1.00	0.07	1.00	1.00	1.00
Satd. Flow (perm)	1770	1583	138	3539	3539	1583
Volume (vph)	211	183	249	1742	1322	116
Peak-hour factor, PHF	0.95	0.95	0.95	0.95	0.95	0.95
Adj. Flow (vph)	222	193	262	1834	1392	122
RTOR Reduction (vph)	0	151	0	0	0	35
Lane Group Flow (vph)	222	42	262	1834	1392	87
Turn Type		Perm	pm+pt			pm+ov
Protected Phases	4		1	6	2	4
Permitted Phases		4	6			2
Actuated Green, G (s)	18.2	18.2	70.8	70.8	47.5	65.7
Effective Green, g (s)	22.2	22.2	74.3	74.3	51.0	73.2
Actuated g/C Ratio	0.22	0.22	0.72	0.72	0.50	0.71
Clearance Time (s)	7.0	7.0	7.0	6.5	6.5	7.0
Vehicle Extension (s)	3.0	3.0	4.0	4.0	4.0	3.0
Lane Grp Cap (vph)	383	343	423	2565	1761	1177
v/s Ratio Prot	c0.13		0.12	c0.52	c0.39	0.02
v/s Ratio Perm		0.03	0.33			0.04
v/c Ratio	0.58	0.12	0.62	0.72	0.79	0.07
Uniform Delay, d1	36.0	32.3	25.0	8.1	21.3	4.4
Progression Factor	1.00	1.00	1.00	1.00	1.00	1.00
Incremental Delay, d2	2.1	0.2	3.1	1.0	2.6	0.0
Delay (s)	38.1	32.5	28.1	9.1	24.0	4.4
Level of Service	D	C	C	A	C	A
Approach Delay (s)	35.5			11.5	22.4	
Approach LOS	D			B	C	

Intersection Summary

HCM Average Control Delay	18.1	HCM Level of Service	B
HCM Volume to Capacity ratio	0.73		
Actuated Cycle Length (s)	102.5	Sum of lost time (s)	9.0
Intersection Capacity Utilization	72.0%	ICU Level of Service	C
Analysis Period (min)	15		

c Critical Lane Group

Movement	EBL	EBT	EBR	WBL	WBT	WBR	NBL	NBT	NBR	SBL	SBT	SBR
Lane Configurations												
Ideal Flow (vphpl)	1900	1900	1900	1900	1900	1900	1900	1900	1900	1900	1900	1900
Lane Width	12	12	12	12	12	13	12	12	12	12	12	12
Total Lost time (s)	3.0	3.0	3.0	3.0	3.0	3.0	3.0	3.0	3.0	3.0	3.0	3.0
Lane Util. Factor	0.97	0.91	1.00	0.97	0.86	1.00	0.97	0.95	1.00	0.97	0.95	1.00
Frt	1.00	1.00	0.85	1.00	1.00	0.85	1.00	1.00	0.85	1.00	1.00	0.85
Flt Protected	0.95	1.00	1.00	0.95	1.00	1.00	0.95	1.00	1.00	0.95	1.00	1.00
Satd. Flow (prot)	3433	5085	1583	3433	6408	1636	3433	3539	1583	3433	3539	1583
Flt Permitted	0.95	1.00	1.00	0.95	1.00	1.00	0.95	1.00	1.00	0.95	1.00	1.00
Satd. Flow (perm)	3433	5085	1583	3433	6408	1636	3433	3539	1583	3433	3539	1583
Volume (vph)	245	1160	194	216	2758	1205	127	549	106	762	394	231
Peak-hour factor, PHF	0.95	0.95	0.95	0.95	0.95	0.95	0.95	0.95	0.95	0.95	0.95	0.95
Adj. Flow (vph)	258	1221	204	227	2903	1268	134	578	112	802	415	243
RTOR Reduction (vph)	0	0	0	0	0	0	0	0	6	0	0	5
Lane Group Flow (vph)	258	1221	204	227	2903	1268	134	578	106	802	415	238
Turn Type	Prot		Free	Prot		Free	Prot		pm+ov	Prot		pm+ov
Protected Phases	1	6		5	2		3	8	5	7	4	1
Permitted Phases			Free			Free			8			4
Actuated Green, G (s)	4.4	44.1	130.0	11.3	51.0	130.0	5.0	23.1	34.4	24.0	42.1	46.5
Effective Green, g (s)	8.4	48.1	130.0	15.3	55.0	130.0	9.0	26.6	41.9	28.0	45.6	54.0
Actuated g/C Ratio	0.06	0.37	1.00	0.12	0.42	1.00	0.07	0.20	0.32	0.22	0.35	0.42
Clearance Time (s)	7.0	7.0		7.0	7.0		7.0	6.5	7.0	7.0	6.5	7.0
Vehicle Extension (s)	2.0	3.0		2.0	3.0		2.0	2.0	2.0	2.0	2.0	2.0
Lane Grp Cap (vph)	222	1881	1583	404	2711	1636	238	724	547	739	1241	694
v/s Ratio Prot	c0.08	0.24		0.07	c0.45		0.04	0.16	0.02	c0.23	0.12	0.02
v/s Ratio Perm			0.13			c0.78			0.04			0.13
v/c Ratio	1.16	0.65	0.13	0.56	1.07	0.78	0.56	0.80	0.19	1.09	0.33	0.34
Uniform Delay, d1	60.8	34.0	0.0	54.2	37.5	0.0	58.6	49.2	31.8	51.0	31.0	25.9
Progression Factor	1.00	1.00	1.00	1.00	1.00	1.00	1.00	1.00	1.00	1.00	1.00	1.00
Incremental Delay, d2	111.1	1.8	0.2	1.1	39.9	3.7	1.8	5.7	0.1	58.6	0.1	0.1
Delay (s)	171.9	35.7	0.2	55.3	77.4	3.7	60.4	54.9	31.9	109.6	31.1	26.0
Level of Service	F	D	A	E	E	A	E	D	C	F	C	C
Approach Delay (s)		52.3			55.0			52.7			73.4	
Approach LOS		D			D			D			E	

Intersection Summary

HCM Average Control Delay	57.4	HCM Level of Service	E
HCM Volume to Capacity ratio	0.99		
Actuated Cycle Length (s)	130.0	Sum of lost time (s)	6.0
Intersection Capacity Utilization	97.2%	ICU Level of Service	F
Analysis Period (min)	15		

c Critical Lane Group

Movement	EBL	EBT	EBR	WBL	WBT	WBR	NBL	NBT	NBR	SBL	SBT	SBR
Lane Configurations												
Ideal Flow (vphpl)	1900	1900	1900	1900	1900	1900	1900	1900	1900	1900	1900	1900
Total Lost time (s)	3.0	3.0	3.0	3.0	3.0	3.0	3.0	3.0	3.0	3.0	3.0	3.0
Lane Util. Factor	1.00	0.86	1.00	1.00	0.86	1.00	1.00	0.95	1.00	1.00	0.95	1.00
Frt	1.00	1.00	0.85	1.00	1.00	0.85	1.00	1.00	0.85	1.00	1.00	0.85
Flt Protected	0.95	1.00	1.00	0.95	1.00	1.00	0.95	1.00	1.00	0.95	1.00	1.00
Satd. Flow (prot)	1770	6408	1583	1770	6408	1583	1770	3539	1583	1770	3539	1583
Flt Permitted	0.95	1.00	1.00	0.95	1.00	1.00	0.71	1.00	1.00	0.53	1.00	1.00
Satd. Flow (perm)	1770	6408	1583	1770	6408	1583	1323	3539	1583	983	3539	1583
Volume (vph)	27	1982	92	581	3625	159	145	33	484	290	65	147
Peak-hour factor, PHF	0.95	0.95	0.95	0.95	0.95	0.95	0.95	0.95	0.95	0.95	0.95	0.95
Adj. Flow (vph)	28	2086	97	612	3816	167	153	35	509	305	68	155
RTOR Reduction (vph)	0	0	57	0	0	47	0	0	0	0	0	24
Lane Group Flow (vph)	28	2086	40	612	3816	120	153	35	509	305	68	131
Turn Type	Prot		pm+ov	Prot		pm+ov	pm+pt		Free	pm+pt		pm+ov
Protected Phases	1	6	3	5	2	7	3	8		7	4	1
Permitted Phases			6			2	8		Free	4		4
Actuated Green, G (s)	7.0	32.4	38.4	35.0	60.4	71.8	10.2	4.2	110.0	21.0	9.6	16.6
Effective Green, g (s)	11.0	35.9	45.9	39.0	63.9	79.3	17.7	7.7	110.0	26.1	13.1	24.1
Actuated g/C Ratio	0.10	0.33	0.42	0.35	0.58	0.72	0.16	0.07	1.00	0.24	0.12	0.22
Clearance Time (s)	7.0	6.5	7.0	7.0	6.5	7.0	7.0	6.5		7.0	6.5	7.0
Vehicle Extension (s)	2.0	3.0	2.0	2.0	3.0	2.0	2.0	2.0		2.0	2.0	2.0
Lane Grp Cap (vph)	177	2091	704	628	3722	1184	254	248	1583	343	421	390
v/s Ratio Prot	0.02	0.33	0.01	c0.35	c0.60	0.01	0.05	0.01		c0.12	0.02	0.03
v/s Ratio Perm			0.02			0.06	0.04		0.32	c0.09		0.05
v/c Ratio	0.16	1.00	0.06	0.97	1.03	0.10	0.60	0.14	0.32	0.89	0.16	0.34
Uniform Delay, d1	45.3	37.0	19.1	35.0	23.1	4.6	42.4	48.0	0.0	39.1	43.5	36.2
Progression Factor	1.00	1.00	1.00	1.00	1.00	1.00	1.00	1.00	1.00	1.00	1.00	1.00
Incremental Delay, d2	0.2	19.1	0.0	29.2	21.7	0.2	2.7	0.1	0.5	27.2	0.8	0.2
Delay (s)	45.4	56.1	19.1	64.2	44.7	4.8	45.1	48.1	0.5	66.3	44.3	36.4
Level of Service	D	E	B	E	D	A	D	D	A	E	D	D
Approach Delay (s)		54.4			45.9			12.7			54.7	
Approach LOS		D			D			B			D	

Intersection Summary			
HCM Average Control Delay	45.9	HCM Level of Service	D
HCM Volume to Capacity ratio	0.97		
Actuated Cycle Length (s)	110.0	Sum of lost time (s)	6.0
Intersection Capacity Utilization	93.6%	ICU Level of Service	F
Analysis Period (min)	15		

c Critical Lane Group

Movement	EBL	EBT	EBR	WBL	WBT	WBR	NBL	NBT	NBR	SBL	SBT	SBR
Lane Configurations												
Ideal Flow (vphpl)	1900	1900	1900	1900	1900	1900	1900	1900	1900	1900	1900	1900
Total Lost time (s)	3.0	3.0	3.0	3.0	3.0	3.0	3.0	3.0	3.0	3.0	3.0	3.0
Lane Util. Factor	0.94	0.86	1.00	0.97	0.86	1.00	0.97	0.95	1.00	0.97	0.95	1.00
Frt	1.00	1.00	0.85	1.00	1.00	0.85	1.00	1.00	0.85	1.00	1.00	0.85
Flt Protected	0.95	1.00	1.00	0.95	1.00	1.00	0.95	1.00	1.00	0.95	1.00	1.00
Satd. Flow (prot)	4990	6408	1583	3433	6408	1583	3433	3539	1583	3433	3539	1583
Flt Permitted	0.95	1.00	1.00	0.95	1.00	1.00	0.95	1.00	1.00	0.95	1.00	1.00
Satd. Flow (perm)	4990	6408	1583	3433	6408	1583	3433	3539	1583	3433	3539	1583
Volume (vph)	760	3401	258	102	5003	358	402	152	675	449	269	1768
Peak-hour factor, PHF	0.95	0.95	0.95	0.95	0.95	0.95	0.95	0.95	0.95	0.95	0.95	0.95
Adj. Flow (vph)	800	3580	272	107	5266	377	423	160	711	473	283	1861
RTOR Reduction (vph)	0	0	0	0	0	0	0	0	0	0	0	0
Lane Group Flow (vph)	800	3580	272	107	5266	377	423	160	711	473	283	1861
Turn Type	Prot		Free	Prot		Free	Prot		Free	Prot		Free
Protected Phases	1	6		5	2		7	4		3	8	
Permitted Phases			Free			Free			Free			Free
Actuated Green, G (s)	14.0	90.4	145.0	7.6	84.0	145.0	11.0	6.0	145.0	13.0	8.0	145.0
Effective Green, g (s)	18.0	94.4	145.0	11.6	88.0	145.0	15.0	10.0	145.0	17.0	12.0	145.0
Actuated g/C Ratio	0.12	0.65	1.00	0.08	0.61	1.00	0.10	0.07	1.00	0.12	0.08	1.00
Clearance Time (s)	7.0	7.0		7.0	7.0		7.0	7.0		7.0	7.0	
Vehicle Extension (s)	2.0	3.0		2.0	3.0		3.0	3.0		3.0	3.0	
Lane Grp Cap (vph)	619	4172	1583	275	3889	1583	355	244	1583	402	293	1583
v/s Ratio Prot	c0.16	0.56		0.03	c0.82		0.12	0.05		0.14	0.08	
v/s Ratio Perm			0.17			0.24			0.45			c1.18
v/c Ratio	1.29	0.86	0.17	0.39	1.35	0.24	1.19	0.66	0.45	1.18	0.97	1.18
Uniform Delay, d1	63.5	20.0	0.0	63.3	28.5	0.0	65.0	65.8	0.0	64.0	66.3	72.5
Progression Factor	1.00	1.00	1.00	1.00	1.00	1.00	1.00	1.00	1.00	1.00	1.00	1.00
Incremental Delay, d2	143.4	2.5	0.2	0.3	161.1	0.4	110.7	6.2	0.9	102.6	42.9	86.0
Delay (s)	206.9	22.5	0.2	63.7	189.6	0.4	175.7	72.0	0.9	166.6	109.2	158.5
Level of Service	F	C	A	E	F	A	F	E	A	F	F	F
Approach Delay (s)		52.9			174.8			66.9			154.6	
Approach LOS		D			F			E			F	

Intersection Summary			
HCM Average Control Delay	121.8	HCM Level of Service	F
HCM Volume to Capacity ratio	1.29		
Actuated Cycle Length (s)	145.0	Sum of lost time (s)	3.0
Intersection Capacity Utilization	119.2%	ICU Level of Service	H
Analysis Period (min)	15		

c Critical Lane Group

Movement	EBL	EBT	EBR	WBL	WBT	WBR	NBL	NBT	NBR	SBL	SBT	SBR
Lane Configurations												
Ideal Flow (vphpl)	1900	1900	1900	1900	1900	1900	1900	1900	1900	1900	1900	1900
Total Lost time (s)	3.0	3.0		3.0	3.0			3.0	3.0		3.0	
Lane Util. Factor	1.00	0.95		1.00	0.95			1.00	1.00		1.00	
Frt	1.00	0.99		1.00	1.00			1.00	0.85		0.94	
Flt Protected	0.95	1.00		0.95	1.00			0.95	1.00		0.98	
Satd. Flow (prot)	1770	3507		1770	3539			1775	1583		1724	
Flt Permitted	0.22	1.00		0.05	1.00			0.72	1.00		0.89	
Satd. Flow (perm)	412	3507		86	3539			1334	1583		1558	
Volume (vph)	25	1955	125	165	1196	0	180	2	262	7	3	7
Peak-hour factor, PHF	0.95	0.95	0.95	0.95	0.95	0.95	0.95	0.95	0.95	0.95	0.95	0.95
Adj. Flow (vph)	26	2058	132	174	1259	0	189	2	276	7	3	7
RTOR Reduction (vph)	0	3	0	0	0	0	0	0	0	0	6	0
Lane Group Flow (vph)	26	2187	0	174	1259	0	0	191	276	0	11	0
Turn Type	Perm			pm+pt			Perm		pm+ov	Perm		
Protected Phases		6		5	2			4	5		8	
Permitted Phases	6			2			4		4	8		
Actuated Green, G (s)	80.5	80.5		94.5	94.5			20.0	28.5		20.0	
Effective Green, g (s)	83.5	83.5		97.5	97.5			23.0	34.0		23.0	
Actuated g/C Ratio	0.66	0.66		0.77	0.77			0.18	0.27		0.18	
Clearance Time (s)	6.0	6.0		5.5	6.0			6.0	5.5		6.0	
Vehicle Extension (s)	4.0	4.0		2.0	4.0			3.0	2.0		3.0	
Lane Grp Cap (vph)	272	2315		213	2728			243	463		283	
v/s Ratio Prot		c0.62		c0.07	0.36				0.05			
v/s Ratio Perm	0.06			0.56				c0.14	0.12		0.01	
v/c Ratio	0.10	0.94		0.82	0.46			0.79	0.60		0.04	
Uniform Delay, d1	7.8	19.4		43.5	5.2			49.4	40.3		42.6	
Progression Factor	1.00	1.00		1.00	1.00			1.00	1.00		1.00	
Incremental Delay, d2	0.2	8.9		20.0	0.2			15.3	1.4		0.1	
Delay (s)	8.0	28.3		63.5	5.3			64.7	41.6		42.7	
Level of Service	A	C		E	A			E	D		D	
Approach Delay (s)		28.1			12.4			51.1			42.7	
Approach LOS		C			B			D			D	

Intersection Summary			
HCM Average Control Delay	25.3	HCM Level of Service	C
HCM Volume to Capacity ratio	0.90		
Actuated Cycle Length (s)	126.5	Sum of lost time (s)	9.0
Intersection Capacity Utilization	93.9%	ICU Level of Service	F
Analysis Period (min)	15		
c Critical Lane Group			

Movement	EBL	EBT	WBT	WBR	SBL	SBR
Lane Configurations						
Ideal Flow (vphpl)	1900	1900	1900	1900	1900	1900
Total Lost time (s)	3.0	3.0	3.0	3.0	3.0	3.0
Lane Util. Factor	0.97	0.95	0.95	1.00	0.97	1.00
Frt	1.00	1.00	1.00	0.85	1.00	0.85
Flt Protected	0.95	1.00	1.00	1.00	0.95	1.00
Satd. Flow (prot)	3433	3539	3539	1583	3433	1583
Flt Permitted	0.95	1.00	1.00	1.00	0.95	1.00
Satd. Flow (perm)	3433	3539	3539	1583	3433	1583
Volume (vph)	1251	744	632	863	717	825
Peak-hour factor, PHF	0.95	0.95	0.95	0.95	0.95	0.95
Adj. Flow (vph)	1317	783	665	908	755	868
RTOR Reduction (vph)	0	0	0	4	0	481
Lane Group Flow (vph)	1317	783	665	904	755	387
Turn Type	Prot			pm+ov		Perm
Protected Phases	5	2	6	4	4	
Permitted Phases				6		4
Actuated Green, G (s)	33.0	59.6	19.6	45.1	25.5	25.5
Effective Green, g (s)	37.0	63.6	23.6	53.6	30.0	30.0
Actuated g/C Ratio	0.37	0.64	0.24	0.54	0.30	0.30
Clearance Time (s)	7.0	7.0	7.0	7.5	7.5	7.5
Vehicle Extension (s)	2.0	3.0	3.0	3.0	3.0	3.0
Lane Grp Cap (vph)	1275	2260	839	900	1034	477
v/s Ratio Prot	c0.38	0.22	0.19	c0.30	0.22	
v/s Ratio Perm				0.27		0.24
v/c Ratio	1.03	0.35	0.79	1.00	0.73	0.81
Uniform Delay, d1	31.3	8.4	35.7	23.0	31.2	32.2
Progression Factor	1.00	1.00	1.00	1.00	1.00	1.00
Incremental Delay, d2	34.1	0.1	5.2	31.2	2.7	10.0
Delay (s)	65.4	8.4	40.9	54.2	33.9	42.2
Level of Service	E	A	D	D	C	D
Approach Delay (s)		44.2	48.5		38.3	
Approach LOS		D	D		D	

Intersection Summary			
HCM Average Control Delay	43.7	HCM Level of Service	D
HCM Volume to Capacity ratio	1.02		
Actuated Cycle Length (s)	99.6	Sum of lost time (s)	6.0
Intersection Capacity Utilization	95.8%	ICU Level of Service	F
Analysis Period (min)	15		
c Critical Lane Group			

HCM Signalized Intersection Capacity Analysis
24: Pacific Blvd & Loudoun County Parkway

Kincora
Future Background 2025

Movement	EBL	EBT	EBR	WBL	WBT	WBR	NBL	NBT	NBR	SBL	SBT	SBR
Lane Configurations												
Ideal Flow (vphpl)	1900	1900	1900	1900	1900	1900	1900	1900	1900	1900	1900	1900
Total Lost time (s)	4.0		4.0	4.0		4.0	4.0	4.0	4.0	4.0	4.0	4.0
Lane Util. Factor	0.97		1.00	0.97		0.88	0.97	0.95	1.00	0.97	0.95	1.00
Frt	1.00		0.85	1.00		0.85	1.00	1.00	0.85	1.00	1.00	0.85
Flt Protected	0.95		1.00	0.95		1.00	0.95	1.00	1.00	0.95	1.00	1.00
Satd. Flow (prot)	3433		1583	3433		2787	3433	3539	1583	3433	3539	1583
Flt Permitted	0.95		1.00	0.95		1.00	0.95	1.00	1.00	0.95	1.00	1.00
Satd. Flow (perm)	3433		1583	3433		2787	3433	3539	1583	3433	3539	1583
Volume (vph)	354	0	629	98	0	1567	343	1655	20	574	1477	213
Peak-hour factor, PHF	0.95	0.95	0.95	0.95	0.95	0.95	0.95	0.95	0.95	0.95	0.95	0.95
Adj. Flow (vph)	373	0	662	103	0	1649	361	1742	21	604	1555	224
RTOR Reduction (vph)	0	0	0	0	0	0	0	0	7	0	0	53
Lane Group Flow (vph)	373	0	662	103	0	1649	361	1742	14	604	1555	171
Turn Type	Prot		Free	Prot		Free	Prot		pm+ov	Prot		pm+ov
Protected Phases	7	4		3	8		5	2	3	1	6	7
Permitted Phases			Free			Free			2			6
Actuated Green, G (s)	16.3		126.3	7.0		126.3	14.8	67.6	74.6	23.4	76.2	92.5
Effective Green, g (s)	17.3		126.3	8.0		126.3	17.8	70.6	78.6	26.4	79.2	96.5
Actuated g/C Ratio	0.14		1.00	0.06		1.00	0.14	0.56	0.62	0.21	0.63	0.76
Clearance Time (s)	5.0			5.0			7.0	7.0	5.0	7.0	7.0	5.0
Vehicle Extension (s)	2.0			2.0			2.0	3.0	2.0	2.0	3.0	2.0
Lane Grp Cap (vph)	470		1583	217		2787	484	1978	1035	718	2219	1260
v/s Ratio Prot	c0.11			0.03			0.11	c0.49	0.00	c0.18	0.44	0.02
v/s Ratio Perm			0.42			0.59			0.01			0.09
v/c Ratio	0.79		0.42	0.47		0.59	0.75	0.88	0.01	0.84	0.70	0.14
Uniform Delay, d1	52.8		0.0	57.1		0.0	52.1	24.2	9.1	47.9	15.7	3.9
Progression Factor	1.00		1.00	1.00		1.00	1.00	1.00	1.00	1.00	1.00	1.00
Incremental Delay, d2	8.4		0.8	0.6		0.9	5.4	5.0	0.0	8.5	1.0	0.0
Delay (s)	61.1		0.8	57.7		0.9	57.5	29.2	9.1	56.4	16.7	3.9
Level of Service	E		A	E		A	E	C	A	E	B	A
Approach Delay (s)		22.6			4.3			33.8			25.6	
Approach LOS		C			A			C			C	

Intersection Summary

HCM Average Control Delay	22.4	HCM Level of Service	C
HCM Volume to Capacity ratio	0.86		
Actuated Cycle Length (s)	126.3	Sum of lost time (s)	12.0
Intersection Capacity Utilization	88.9%	ICU Level of Service	E
Analysis Period (min)	15		

c Critical Lane Group

HCM Unsignalized Intersection Capacity Analysis
25: Russel Branch Pkwy & Richfield Way

Kincora
Future Background 2025

Movement	EBL	EBT	EBR	WBL	WBT	WBR	NBL	NBT	NBR	SBL	SBT	SBR
Lane Configurations												
Sign Control		Free			Free			Stop			Stop	
Grade		0%			0%			0%			0%	
Volume (veh/h)	0	310	0	0	515	0	0	0	0	0	0	0
Peak Hour Factor	0.92	0.92	0.92	0.92	0.92	0.92	0.92	0.92	0.92	0.92	0.92	0.92
Hourly flow rate (vph)	0	337	0	0	560	0	0	0	0	0	0	0
Pedestrians												
Lane Width (ft)												
Walking Speed (ft/s)												
Percent Blockage												
Right turn flare (veh)												
Median type								None			None	
Median storage veh)												
Upstream signal (ft)												
pX, platoon unblocked												
vC, conflicting volume	560			337			617	897	168	728	897	280
vC1, stage 1 conf vol												
vC2, stage 2 conf vol												
vCu, unblocked vol	560			337			617	897	168	728	897	280
tC, single (s)	4.1			4.1			7.5	6.5	6.9	7.5	6.5	6.9
tC, 2 stage (s)												
tF (s)	2.2			2.2			3.5	4.0	3.3	3.5	4.0	3.3
p0 queue free %	100			100			100	100	100	100	100	100
cM capacity (veh/h)	1007			1219			374	278	846	311	278	717

Direction, Lane #	EB 1	EB 2	EB 3	EB 4	WB 1	WB 2	WB 3	WB 4	NB 1	NB 2	SB 1	SB 2
Volume Total	0	168	168	0	0	280	280	0	0	0	0	0
Volume Left	0	0	0	0	0	0	0	0	0	0	0	0
Volume Right	0	0	0	0	0	0	0	0	0	0	0	0
cSH	1700	1700	1700	1700	1700	1700	1700	1700	1700	1700	1700	1700
Volume to Capacity	0.00	0.10	0.10	0.00	0.00	0.16	0.16	0.00	0.00	0.00	0.00	0.00
Queue Length 95th (ft)	0	0	0	0	0	0	0	0	0	0	0	0
Control Delay (s)	0.0	0.0	0.0	0.0	0.0	0.0	0.0	0.0	0.0	0.0	0.0	0.0
Lane LOS									A	A	A	A
Approach Delay (s)	0.0				0.0				0.0		0.0	
Approach LOS									A		A	

Intersection Summary

Average Delay	0.0		
Intersection Capacity Utilization	17.6%	ICU Level of Service	A
Analysis Period (min)	15		

Movement	EBL	EBT	WBT	WBR	SWL	SWR
Lane Configurations		↑↑	↑↑			↱↱
Sign Control		Free	Free		Stop	
Grade		0%	0%		0%	
Volume (veh/h)	0	0	0	0	0	0
Peak Hour Factor	0.95	0.95	0.95	0.95	0.95	0.95
Hourly flow rate (vph)	0	0	0	0	0	0
Pedestrians						
Lane Width (ft)						
Walking Speed (ft/s)						
Percent Blockage						
Right turn flare (veh)						
Median type					None	
Median storage veh)						
Upstream signal (ft)						
pX, platoon unblocked						
vC, conflicting volume	0				0	0
vC1, stage 1 conf vol						
vC2, stage 2 conf vol						
vCu, unblocked vol	0				0	0
tC, single (s)	4.1				6.8	6.9
tC, 2 stage (s)						
tF (s)	2.2				3.5	3.3
p0 queue free %	100				100	100
cM capacity (veh/h)	1622				1023	1084

Direction, Lane #	EB 1	EB 2	WB 1	WB 2	SW 1	SW 2
Volume Total	0	0	0	0	0	0
Volume Left	0	0	0	0	0	0
Volume Right	0	0	0	0	0	0
cSH	1700	1700	1700	1700	1700	1700
Volume to Capacity	0.00	0.00	0.00	0.00	0.00	0.00
Queue Length 95th (ft)	0	0	0	0	0	0
Control Delay (s)	0.0	0.0	0.0	0.0	0.0	0.0
Lane LOS					A	A
Approach Delay (s)	0.0		0.0		0.0	
Approach LOS					A	

Intersection Summary			
Average Delay	0.0		
Intersection Capacity Utilization	0.0%	ICU Level of Service	A
Analysis Period (min)	15		

HCM Signalized Intersection Capacity Analysis
11: Smith Switch Road & Loudoun County Parkway

Kincora
Future Background 2025

Movement	EBL	EBR	NBL	NBT	SBT	SBR
Lane Configurations						
Ideal Flow (vphpl)	1900	1900	1900	1900	1900	1900
Total Lost time (s)	4.0		4.0	4.0	4.0	
Lane Util. Factor	0.97		1.00	0.95	0.95	
Frt	0.99		1.00	1.00	0.99	
Flt Protected	0.95		0.95	1.00	1.00	
Satd. Flow (prot)	3427		1770	3539	3506	
Flt Permitted	0.95		0.14	1.00	1.00	
Satd. Flow (perm)	3427		266	3539	3506	
Volume (vph)	106	5	11	1164	1118	74
Peak-hour factor, PHF	0.95	0.95	0.95	0.95	0.95	0.95
Adj. Flow (vph)	112	5	12	1225	1177	78
RTOR Reduction (vph)	2	0	0	0	3	0
Lane Group Flow (vph)	115	0	12	1225	1252	0
Turn Type			pm+pt			
Protected Phases	4		5	2	6	
Permitted Phases			2			
Actuated Green, G (s)	10.9		49.9	49.9	41.8	
Effective Green, g (s)	13.9		52.9	52.9	44.8	
Actuated g/C Ratio	0.19		0.71	0.71	0.60	
Clearance Time (s)	7.0		7.0	7.0	7.0	
Vehicle Extension (s)	4.0		2.0	3.0	3.0	
Lane Grp Cap (vph)	637		271	2503	2100	
v/s Ratio Prot	c0.03		0.00	c0.35	c0.36	
v/s Ratio Perm			0.03			
v/c Ratio	0.18		0.04	0.49	0.60	
Uniform Delay, d1	25.6		5.3	4.9	9.4	
Progression Factor	1.00		1.00	1.00	1.00	
Incremental Delay, d2	0.2		0.0	0.2	0.5	
Delay (s)	25.8		5.3	5.1	9.8	
Level of Service	C		A	A	A	
Approach Delay (s)	25.8			5.1	9.8	
Approach LOS	C			A	A	

Intersection Summary

HCM Average Control Delay	8.3	HCM Level of Service	A
HCM Volume to Capacity ratio	0.51		
Actuated Cycle Length (s)	74.8	Sum of lost time (s)	12.0
Intersection Capacity Utilization	48.3%	ICU Level of Service	A
Analysis Period (min)	15		

c Critical Lane Group

HCM Signalized Intersection Capacity Analysis
21: Waxpool Road & Pacific Blvd

Kincora
Future Background 2025

Movement	EBL	EBT	EBR	WBL	WBT	WBR	NBL	NBT	NBR	SBL	SBT	SBR
Lane Configurations												
Ideal Flow (vphpl)	1900	1900	1900	1900	1900	1900	1900	1900	1900	1900	1900	1900
Total Lost time (s)	3.0	3.0	3.0	3.0	3.0	3.0	3.0	3.0	3.0	3.0	3.0	3.0
Lane Util. Factor	0.94	0.86	1.00	0.97	0.86	1.00	0.97	0.95	1.00	0.97	0.95	1.00
Frt	1.00	1.00	0.85	1.00	1.00	0.85	1.00	1.00	0.85	1.00	1.00	0.85
Flt Protected	0.95	1.00	1.00	0.95	1.00	0.95	1.00	1.00	1.00	0.95	1.00	1.00
Satd. Flow (prot)	4990	6408	1583	3433	6408	1583	3433	3539	1583	3433	3539	1583
Flt Permitted	0.95	1.00	1.00	0.95	1.00	1.00	0.95	1.00	1.00	0.95	1.00	1.00
Satd. Flow (perm)	4990	6408	1583	3433	6408	1583	3433	3539	1583	3433	3539	1583
Volume (vph)	451	2261	129	25	1820	847	144	49	46	673	41	601
Peak-hour factor, PHF	0.95	0.95	0.95	0.95	0.95	0.95	0.95	0.95	0.95	0.95	0.95	0.95
Adj. Flow (vph)	475	2380	136	26	1916	892	152	52	48	708	43	633
RTOR Reduction (vph)	0	0	0	0	0	0	0	0	0	0	0	0
Lane Group Flow (vph)	475	2380	136	26	1916	892	152	52	48	708	43	633
Turn Type	Prot		Free	Prot		Free	Prot		Free	Prot		Free
Protected Phases	1	6		5	2		7	4		3	8	
Permitted Phases			Free			Free			Free			Free
Actuated Green, G (s)	18.0	77.9	145.0	3.7	63.6	145.0	14.5	6.4	145.0	29.0	20.9	145.0
Effective Green, g (s)	22.0	81.9	145.0	7.7	67.6	145.0	18.5	10.4	145.0	33.0	24.9	145.0
Actuated g/C Ratio	0.15	0.56	1.00	0.05	0.47	1.00	0.13	0.07	1.00	0.23	0.17	1.00
Clearance Time (s)	7.0	7.0		7.0	7.0		7.0	7.0		7.0	7.0	
Vehicle Extension (s)	2.0	3.0		2.0	3.0		3.0	3.0		3.0	3.0	
Lane Grp Cap (vph)	757	3619	1583	182	2987	1583	438	254	1583	781	608	1583
v/s Ratio Prot	c0.10	c0.37		0.01	0.30		0.04	0.01		c0.21	0.01	
v/s Ratio Perm			0.09			c0.56			0.03			0.40
v/c Ratio	0.63	0.66	0.09	0.14	0.64	0.56	0.35	0.20	0.03	0.91	0.07	0.40
Uniform Delay, d1	57.7	21.8	0.0	65.5	29.5	0.0	57.7	63.4	0.0	54.5	50.3	0.0
Progression Factor	1.00	1.00	1.00	1.00	1.00	1.00	1.00	1.00	1.00	1.00	1.00	1.00
Incremental Delay, d2	1.2	0.9	0.1	0.1	1.1	1.5	0.5	0.4	0.0	14.1	0.0	0.8
Delay (s)	58.8	22.8	0.1	65.6	30.5	1.5	58.2	63.8	0.0	68.6	50.4	0.8
Level of Service	E	C	A	E	C	A	E	E	A	E	D	A
Approach Delay (s)		27.5			21.7			48.3			37.0	
Approach LOS		C			C			D			D	

Intersection Summary

HCM Average Control Delay	27.8	HCM Level of Service	C
HCM Volume to Capacity ratio	0.69		
Actuated Cycle Length (s)	145.0	Sum of lost time (s)	3.0
Intersection Capacity Utilization	72.8%	ICU Level of Service	C
Analysis Period (min)	15		

c Critical Lane Group

Movement	EBL	EBT	WBT	WBR	SWL	SWR
Lane Configurations		↑↑	↑↑			↑↑
Sign Control		Free	Free		Stop	
Grade		0%	0%		0%	
Volume (veh/h)	0	0	0	0	0	0
Peak Hour Factor	0.95	0.95	0.95	0.95	0.95	0.95
Hourly flow rate (vph)	0	0	0	0	0	0
Pedestrians						
Lane Width (ft)						
Walking Speed (ft/s)						
Percent Blockage						
Right turn flare (veh)						
Median type					None	
Median storage veh)						
Upstream signal (ft)						
pX, platoon unblocked						
vC, conflicting volume	0				0	0
vC1, stage 1 conf vol						
vC2, stage 2 conf vol						
vCu, unblocked vol	0				0	0
tC, single (s)	4.1				6.8	6.9
tC, 2 stage (s)						
tF (s)	2.2				3.5	3.3
p0 queue free %	100				100	100
cM capacity (veh/h)	1622				1023	1084

Direction, Lane #	EB 1	EB 2	WB 1	WB 2	SW 1	SW 2
Volume Total	0	0	0	0	0	0
Volume Left	0	0	0	0	0	0
Volume Right	0	0	0	0	0	0
cSH	1700	1700	1700	1700	1700	1700
Volume to Capacity	0.00	0.00	0.00	0.00	0.00	0.00
Queue Length 95th (ft)	0	0	0	0	0	0
Control Delay (s)	0.0	0.0	0.0	0.0	0.0	0.0
Lane LOS					A	A
Approach Delay (s)	0.0		0.0		0.0	
Approach LOS					A	

Intersection Summary			
Average Delay	0.0		
Intersection Capacity Utilization	0.0%	ICU Level of Service	A
Analysis Period (min)	15		

APPENDIX D-7

INTERSECTION CAPACITY ANALYSIS RESULTS – FULL BUILD-OUT YEAR (2025) CONDITIONS WITH DEVELOPMENT

HCM Signalized Intersection Capacity Analysis
5: Route 7 & Countryside Blvd.

Kincora
Total Future 2025

Movement	EBL	EBT	EBR	WBL	WBT	WBR	NBL	NBT	NBR	SBL	SBT	SBR
Lane Configurations												
Ideal Flow (vphpl)	1900	1900	1900	1900	1900	1900	1900	1900	1900	1900	1900	1900
Total Lost time (s)	3.0	3.0	3.0	3.0	3.0	3.0	3.0	3.0	3.0	3.0	3.0	3.0
Lane Util. Factor	0.97	0.86	1.00	0.97	0.86	1.00	0.97	0.95	1.00	0.97	0.95	1.00
Frt	1.00	1.00	0.85	1.00	1.00	0.85	1.00	1.00	0.85	1.00	1.00	0.85
Flt Protected	0.95	1.00	1.00	0.95	1.00	1.00	0.95	1.00	1.00	0.95	1.00	1.00
Satd. Flow (prot)	3433	6408	1583	3433	6408	1583	3433	3539	1583	3433	3539	1583
Flt Permitted	0.95	1.00	1.00	0.95	1.00	1.00	0.95	1.00	1.00	0.95	1.00	1.00
Satd. Flow (perm)	3433	6408	1583	3433	6408	1583	3433	3539	1583	3433	3539	1583
Volume (vph)	314	3262	166	134	2577	108	86	70	153	165	94	372
Peak-hour factor, PHF	0.95	0.95	0.95	0.95	0.95	0.95	0.95	0.95	0.95	0.95	0.95	0.95
Adj. Flow (vph)	331	3434	175	141	2713	114	91	74	161	174	99	392
RTOR Reduction (vph)	0	0	0	0	0	39	0	0	0	0	0	20
Lane Group Flow (vph)	331	3434	175	141	2713	75	91	74	161	174	99	372
Turn Type	Prot		Free	Prot		pm+ov	Prot		Free	Prot		pm+ov
Protected Phases	1	6		5	2	3	7	4		3	8	1
Permitted Phases			Free			2			Free			8
Actuated Green, G (s)	16.0	77.6	140.0	8.0	69.6	84.0	7.4	12.0	140.0	14.4	19.0	35.0
Effective Green, g (s)	20.0	81.6	140.0	12.0	73.6	92.0	11.4	16.0	140.0	18.4	23.0	43.0
Actuated g/C Ratio	0.14	0.58	1.00	0.09	0.53	0.66	0.08	0.11	1.00	0.13	0.16	0.31
Clearance Time (s)	7.0	7.0		7.0	7.0	7.0	7.0	7.0		7.0	7.0	7.0
Vehicle Extension (s)	2.0	2.0		3.0	2.0	2.0	2.0	2.0		2.0	2.0	2.0
Lane Grp Cap (vph)	490	3735	1583	294	3369	1074	280	404	1583	451	581	520
v/s Ratio Prot	0.10	c0.54		0.04	0.42	0.01	0.03	0.02		c0.05	0.03	c0.10
v/s Ratio Perm			0.11			0.04			0.10			0.13
v/c Ratio	0.68	0.92	0.11	0.48	0.81	0.07	0.33	0.18	0.10	0.39	0.17	0.72
Uniform Delay, d1	56.9	26.2	0.0	61.0	27.3	8.6	60.7	56.1	0.0	55.6	50.3	43.1
Progression Factor	1.00	1.00	1.00	1.00	1.00	1.00	1.00	1.00	1.00	1.00	1.00	1.00
Incremental Delay, d2	2.9	4.8	0.1	1.2	2.2	0.0	0.2	0.1	0.1	0.2	0.1	3.9
Delay (s)	59.8	31.1	0.1	62.3	29.5	8.6	60.9	56.2	0.1	55.8	50.3	46.9
Level of Service	E	C	A	E	C	A	E	E	A	E	D	D
Approach Delay (s)		32.1			30.2			29.8			49.8	
Approach LOS		C			C			C			D	

Intersection Summary

HCM Average Control Delay	32.8	HCM Level of Service	C
HCM Volume to Capacity ratio	0.80		
Actuated Cycle Length (s)	140.0	Sum of lost time (s)	6.0
Intersection Capacity Utilization	75.4%	ICU Level of Service	D
Analysis Period (min)	15		

c Critical Lane Group

HCM Signalized Intersection Capacity Analysis
6: Route 7 & Palisade Parkway

Kincora
Total Future 2025

Movement	EBL	EBT	EBR	WBL	WBT	WBR	NBL	NBT	NBR	SBL	SBT	SBR
Lane Configurations												
Ideal Flow (vphpl)	1900	1900	1900	1900	1900	1900	1900	1900	1900	1900	1900	1900
Total Lost time (s)	3.0	3.0	3.0	3.0	3.0	3.0	3.0	3.0	3.0	3.0	3.0	3.0
Lane Util. Factor	0.97	0.86	1.00	1.00	0.86	1.00	0.97	1.00	1.00	0.97	1.00	1.00
Frt	1.00	1.00	0.85	1.00	1.00	0.85	1.00	1.00	0.85	1.00	1.00	0.85
Flt Protected	0.95	1.00	1.00	0.95	1.00	1.00	0.95	1.00	1.00	0.95	1.00	1.00
Satd. Flow (prot)	3433	6408	1583	1770	6408	1583	3433	1863	1583	3433	1863	1583
Flt Permitted	0.95	1.00	1.00	0.95	1.00	1.00	0.95	1.00	1.00	0.95	1.00	1.00
Satd. Flow (perm)	3433	6408	1583	1770	6408	1583	3433	1863	1583	3433	1863	1583
Volume (vph)	162	2997	381	123	2539	73	58	34	42	131	82	208
Peak-hour factor, PHF	0.95	0.95	0.95	0.95	0.95	0.95	0.95	0.95	0.95	0.95	0.95	0.95
Adj. Flow (vph)	171	3155	401	129	2673	77	61	36	44	138	86	219
RTOR Reduction (vph)	0	0	0	0	0	0	0	0	6	0	0	22
Lane Group Flow (vph)	171	3155	401	129	2673	77	61	36	38	138	88	197
Turn Type	Prot		Free	Prot		Free	Prot		pm+ov	Prot		pm+ov
Protected Phases	1	6		5	2		7	4	5	3	8	1
Permitted Phases			Free			Free			4			8
Actuated Green, G (s)	10.8	68.3	120.0	10.9	68.4	120.0	4.0	4.8	15.7	8.0	8.8	19.6
Effective Green, g (s)	14.8	72.3	120.0	14.9	72.4	120.0	8.0	8.8	23.7	12.0	12.8	27.6
Actuated g/C Ratio	0.12	0.60	1.00	0.12	0.60	1.00	0.07	0.07	0.20	0.10	0.11	0.23
Clearance Time (s)	7.0	7.0		7.0	7.0		7.0	7.0	7.0	7.0	7.0	7.0
Vehicle Extension (s)	2.0	4.0		2.0	4.0		3.0	3.0	2.0	3.0	3.0	2.0
Lane Grp Cap (vph)	423	3861	1583	220	3866	1583	229	137	352	343	199	404
v/s Ratio Prot	0.05	c0.49		c0.07	0.42		0.02	0.02	0.01	c0.04	0.05	c0.06
v/s Ratio Perm			c0.25			0.05			0.01			0.06
v/c Ratio	0.40	0.82	0.25	0.59	0.69	0.05	0.27	0.26	0.11	0.40	0.43	0.49
Uniform Delay, d1	48.5	18.7	0.0	49.6	16.2	0.0	53.2	52.5	39.5	50.6	50.2	40.1
Progression Factor	1.00	1.00	1.00	1.00	1.00	1.00	1.00	1.00	1.00	1.00	1.00	1.00
Incremental Delay, d2	0.2	2.0	0.4	2.6	1.0	0.1	0.6	1.0	0.1	0.8	1.5	0.3
Delay (s)	48.8	20.7	0.4	52.2	17.2	0.1	53.8	53.6	39.5	51.4	51.7	40.4
Level of Service	D	C	A	D	B	A	D	D	D	D	D	D
Approach Delay (s)		19.8			18.3			49.3			46.0	
Approach LOS		B			B			D			D	

Intersection Summary

HCM Average Control Delay	21.4	HCM Level of Service	C
HCM Volume to Capacity ratio	0.71		
Actuated Cycle Length (s)	120.0	Sum of lost time (s)	9.0
Intersection Capacity Utilization	70.6%	ICU Level of Service	C
Analysis Period (min)	15		

c Critical Lane Group

Movement	WBL	WBR	NBT	NBR	SBL	SBT
Lane Configurations						
Ideal Flow (vphpl)	1900	1900	1900	1900	1900	1900
Total Lost time (s)	3.0	3.0	3.0		3.0	3.0
Lane Util. Factor	1.00	1.00	0.95		1.00	0.95
Frt	1.00	0.85	0.97		1.00	1.00
Flt Protected	0.95	1.00	1.00		0.95	1.00
Satd. Flow (prot)	1770	1583	3445		1770	3539
Flt Permitted	0.95	1.00	1.00		0.43	1.00
Satd. Flow (perm)	1770	1583	3445		798	3539
Volume (vph)	89	191	326	70	159	643
Peak-hour factor, PHF	0.95	0.95	0.95	0.95	0.95	0.95
Adj. Flow (vph)	94	201	343	74	167	677
RTOR Reduction (vph)	0	123	15	0	0	0
Lane Group Flow (vph)	94	78	402	0	167	677
Turn Type		pm+ov			pm+pt	
Protected Phases	4	1	2		1	6
Permitted Phases		4			6	
Actuated Green, G (s)	4.9	12.4	18.6		33.1	33.1
Effective Green, g (s)	8.9	20.4	23.1		37.6	37.6
Actuated g/C Ratio	0.17	0.39	0.44		0.72	0.72
Clearance Time (s)	7.0	7.0	7.5		7.0	7.5
Vehicle Extension (s)	2.0	2.0	2.0		2.0	2.0
Lane Grp Cap (vph)	300	706	1516		784	2535
v/s Ratio Prot	c0.05	0.02	0.12		0.05	c0.19
v/s Ratio Perm		0.03			0.11	
v/c Ratio	0.31	0.11	0.27		0.21	0.27
Uniform Delay, d1	19.1	10.3	9.3		2.5	2.6
Progression Factor	1.00	1.00	1.00		1.00	1.00
Incremental Delay, d2	0.2	0.0	0.0		0.0	0.0
Delay (s)	19.3	10.3	9.4		2.6	2.6
Level of Service	B	B	A		A	A
Approach Delay (s)	13.2		9.4			2.6
Approach LOS	B		A			A

Intersection Summary			
HCM Average Control Delay	6.4	HCM Level of Service	A
HCM Volume to Capacity ratio	0.28		
Actuated Cycle Length (s)	52.5	Sum of lost time (s)	6.0
Intersection Capacity Utilization	37.1%	ICU Level of Service	A
Analysis Period (min)	15		

c Critical Lane Group

Movement	EBL	EBT	EBR	WBL	WBT	WBR	NBL	NBT	NBR	SBL	SBT	SBR
Lane Configurations												
Ideal Flow (vphpl)	1900	1900	1900	1900	1900	1900	1900	1900	1900	1900	1900	1900
Total Lost time (s)		4.0	4.0		4.0	4.0	4.0	4.0	4.0	4.0	4.0	4.0
Lane Util. Factor		1.00	1.00		1.00	1.00	1.00	0.95	1.00	1.00	0.95	1.00
Frt		1.00	0.85		1.00	0.85	1.00	1.00	0.85	1.00	1.00	0.85
Flt Protected		0.95	1.00		0.96	1.00	0.95	1.00	1.00	0.95	1.00	1.00
Satd. Flow (prot)		1778	1583		1783	1583	1770	3539	1583	1770	3539	1583
Flt Permitted		0.67	1.00		0.72	1.00	0.30	1.00	1.00	0.56	1.00	1.00
Satd. Flow (perm)		1257	1583		1335	1583	559	3539	1583	1051	3539	1583
Volume (vph)	41	2	145	71	9	38	35	293	15	9	777	39
Peak-hour factor, PHF	0.95	0.95	0.95	0.95	0.95	0.95	0.95	0.95	0.95	0.95	0.95	0.95
Adj. Flow (vph)	43	2	153	75	9	40	37	308	16	9	818	41
RTOR Reduction (vph)	0	0	132	0	0	35	0	0	5	0	0	14
Lane Group Flow (vph)	0	45	21	0	84	5	37	308	11	9	818	27
Turn Type	Perm		Perm	Perm		Perm	pm+pt		Perm	pm+pt		Perm
Protected Phases		4			8		5	2		1	6	
Permitted Phases	4		4	8		8	2		2	6		6
Actuated Green, G (s)		9.3	9.3		9.3	9.3	61.9	58.7	58.7	57.5	56.5	56.5
Effective Green, g (s)		12.3	12.3		12.3	12.3	67.9	61.7	61.7	63.5	59.5	59.5
Actuated g/C Ratio		0.14	0.14		0.14	0.14	0.75	0.69	0.69	0.71	0.66	0.66
Clearance Time (s)		7.0	7.0		7.0	7.0	7.0	7.0	7.0	7.0	7.0	7.0
Vehicle Extension (s)		2.0	2.0		2.0	2.0	2.0	2.0	2.0	2.0	2.0	2.0
Lane Grp Cap (vph)		172	216		182	216	505	2426	1085	773	2340	1047
v/s Ratio Prot							c0.01	0.09		0.00	c0.23	
v/s Ratio Perm		0.04	0.01		c0.06	0.00	0.05		0.01	0.01		0.02
v/c Ratio		0.26	0.10		0.46	0.03	0.07	0.13	0.01	0.01	0.35	0.03
Uniform Delay, d1		34.8	34.0		35.8	33.7	3.1	4.9	4.5	3.9	6.7	5.3
Progression Factor		1.00	1.00		1.00	1.00	1.00	1.00	1.00	1.00	1.00	1.00
Incremental Delay, d2		0.3	0.1		0.7	0.0	0.0	0.1	0.0	0.0	0.4	0.0
Delay (s)		35.1	34.1		36.5	33.7	3.2	5.0	4.5	3.9	7.1	5.3
Level of Service		D	C		D	C	A	A	A	A	A	A
Approach Delay (s)		34.3			35.6			4.8			7.0	
Approach LOS		C			D			A			A	

Intersection Summary			
HCM Average Control Delay	12.3	HCM Level of Service	B
HCM Volume to Capacity ratio	0.36		
Actuated Cycle Length (s)	90.0	Sum of lost time (s)	18.0
Intersection Capacity Utilization	45.9%	ICU Level of Service	A
Analysis Period (min)	15		

c Critical Lane Group

HCM Signalized Intersection Capacity Analysis — Kincora
10: Gloucester Parkway & Ashburn Village Blvd. — Total Future 2025

Movement	EBL	EBT	EBR	WBL	WBT	WBR	NBL	NBT	NBR	SBL	SBT	SBR
Lane Configurations												
Ideal Flow (vphpl)	1900	1900	1900	1900	1900	1900	1900	1900	1900	1900	1900	1900
Total Lost time (s)	3.0	3.0	3.0	3.0	3.0	3.0	3.0	3.0	3.0	3.0	3.0	3.0
Lane Util. Factor	1.00	0.95	1.00	0.97	0.95	1.00	0.97	0.95	1.00	0.97	0.95	1.00
Frt	1.00	1.00	0.85	1.00	1.00	0.85	1.00	1.00	0.85	1.00	1.00	0.85
Flt Protected	0.95	1.00	1.00	0.95	1.00	1.00	0.95	1.00	1.00	0.95	1.00	1.00
Satd. Flow (prot)	1770	3539	1583	3433	3539	1583	3433	3539	1583	3433	3539	1583
Flt Permitted	0.95	1.00	1.00	0.95	1.00	1.00	0.95	1.00	1.00	0.95	1.00	1.00
Satd. Flow (perm)	1770	3539	1583	3433	3539	1583	3433	3539	1583	3433	3539	1583
Volume (vph)	331	707	220	205	282	157	116	770	296	318	491	81
Peak-hour factor, PHF	0.95	0.95	0.95	0.95	0.95	0.95	0.95	0.95	0.95	0.95	0.95	0.95
Adj. Flow (vph)	348	744	232	216	297	165	122	811	312	335	517	85
RTOR Reduction (vph)	0	0	0	0	0	0	0	0	0	0	0	0
Lane Group Flow (vph)	348	744	232	216	297	165	122	811	312	335	517	85
Turn Type	Prot		Free	Prot		Free	Prot		Free	Prot		Free
Protected Phases	7	4		3	8		5	2		1	6	
Permitted Phases			Free			Free			Free			Free
Actuated Green, G (s)	20.4	27.5	124.1	13.2	20.3	124.1	10.2	38.9	124.1	16.5	45.2	124.1
Effective Green, g (s)	24.4	31.5	124.1	17.2	24.3	124.1	14.2	42.9	124.1	20.5	49.2	124.1
Actuated g/C Ratio	0.20	0.25	1.00	0.14	0.20	1.00	0.11	0.35	1.00	0.17	0.40	1.00
Clearance Time (s)	7.0	7.0		7.0	7.0		7.0	7.0		7.0	7.0	
Vehicle Extension (s)	3.0	3.0		3.0	3.0		3.0	5.0		3.0	5.0	
Lane Grp Cap (vph)	348	898	1583	476	693	1583	393	1223	1583	567	1403	1583
v/s Ratio Prot	c0.20	c0.21		0.06	0.08		0.04	c0.23		c0.10	0.15	
v/s Ratio Perm			0.15			0.10			0.20			0.05
v/c Ratio	1.00	0.83	0.15	0.45	0.43	0.10	0.31	0.66	0.20	0.59	0.37	0.05
Uniform Delay, d1	49.8	43.7	0.0	49.1	43.8	0.0	50.5	34.5	0.0	47.9	26.5	0.0
Progression Factor	1.00	1.00	1.00	1.00	1.00	1.00	1.00	1.00	1.00	1.00	1.00	1.00
Incremental Delay, d2	48.2	6.4	0.2	0.7	0.4	0.1	0.5	1.8	0.3	1.7	0.3	0.1
Delay (s)	98.1	50.1	0.2	49.8	44.2	0.1	50.9	36.3	0.3	49.6	26.8	0.1
Level of Service	F	D	A	D	D	A	D	D	A	D	C	A
Approach Delay (s)		54.0			35.3			28.7			32.5	
Approach LOS		D			D			C			C	

Intersection Summary

HCM Average Control Delay	38.6	HCM Level of Service	D
HCM Volume to Capacity ratio	0.76		
Actuated Cycle Length (s)	124.1	Sum of lost time (s)	9.0
Intersection Capacity Utilization	74.5%	ICU Level of Service	D
Analysis Period (min)	15		

c Critical Lane Group

HCM Signalized Intersection Capacity Analysis — Kincora
11: Smith Switch Road & Loudoun County Parkway — Total Future 2025

Movement	EBL	EBT	EBR	WBL	WBT	WBR	NBL	NBT	NBR	SBL	SBT	SBR
Lane Configurations												
Ideal Flow (vphpl)	1900	1900	1900	1900	1900	1900	1900	1900	1900	1900	1900	1900
Total Lost time (s)	4.0	4.0		4.0	4.0		4.0	4.0		4.0	4.0	
Lane Util. Factor	1.00	0.95		1.00	0.95		1.00	0.95		1.00	0.95	
Frt	1.00	0.98		1.00	0.88		1.00	1.00		1.00	0.99	
Flt Protected	0.95	1.00		0.95	1.00		0.95	1.00		0.95	1.00	
Satd. Flow (prot)	1770	3456		1770	3131		1770	3534		1770	3498	
Flt Permitted	0.95	1.00		0.95	1.00		0.95	1.00		0.11	1.00	
Satd. Flow (perm)	1770	3456		1770	3131		1770	3534		204	3498	
Volume (vph)	110	333	62	113	197	656	48	1557	15	260	1205	103
Peak-hour factor, PHF	0.95	0.95	0.95	0.95	0.95	0.95	0.95	0.95	0.95	0.95	0.95	0.95
Adj. Flow (vph)	116	351	65	119	207	691	51	1639	16	274	1268	108
RTOR Reduction (vph)	0	13	0	0	40	0	0	1	0	0	5	0
Lane Group Flow (vph)	116	403	0	119	858	0	51	1654	0	274	1371	0
Turn Type	Prot			Prot			Prot			Perm		
Protected Phases	7	4		3	8		5	2			6	
Permitted Phases										6		
Actuated Green, G (s)	4.0	15.1		4.0	17.1		6.4	77.6		64.2	64.2	
Effective Green, g (s)	7.0	18.1		7.0	18.1		9.4	80.6		67.2	67.2	
Actuated g/C Ratio	0.06	0.15		0.06	0.15		0.08	0.68		0.57	0.57	
Clearance Time (s)	7.0	7.0		7.0	5.0		7.0	7.0		7.0	7.0	
Vehicle Extension (s)	2.0	4.0		2.0	2.0		2.0	3.0		3.0	3.0	
Lane Grp Cap (vph)	105	531		105	481		141	2420		116	1997	
v/s Ratio Prot	0.07	0.12		c0.07	c0.27		0.03	c0.47			0.39	
v/s Ratio Perm										c1.34		
v/c Ratio	1.10	0.76		1.13	2.42dr		0.36	0.68		2.36	0.69	
Uniform Delay, d1	55.4	47.7		55.4	49.8		51.3	11.0		25.2	17.8	
Progression Factor	1.00	1.00		1.00	1.00		1.00	1.00		1.00	1.00	
Incremental Delay, d2	118.9	6.6		128.2	361.2		0.6	0.8		638.8	1.0	
Delay (s)	174.2	54.3		183.5	411.0		51.9	11.8		664.0	18.8	
Level of Service	F	D		F	F		D	B		F	B	
Approach Delay (s)		80.4			384.4			13.0			126.0	
Approach LOS		F			F			B			F	

Intersection Summary

HCM Average Control Delay	135.3	HCM Level of Service	F
HCM Volume to Capacity ratio	2.02		
Actuated Cycle Length (s)	117.7	Sum of lost time (s)	16.0
Intersection Capacity Utilization	104.0%	ICU Level of Service	G
Analysis Period (min)	15		

dr Defacto Right Lane. Recode with 1 though lane as a right lane.
c Critical Lane Group

Movement	EBL	EBT	EBR	WBL	WBT	WBR	NBL	NBT	NBR	SBL	SBT	SBR
Lane Configurations												
Ideal Flow (vphpl)	1900	1900	1900	1900	1900	1900	1900	1900	1900	1900	1900	1900
Total Lost time (s)	4.0	4.0	4.0	3.0	4.0	3.0	4.0	3.0	3.0	3.0	3.0	4.0
Lane Util. Factor	0.97	0.95	1.00	0.97	0.95	1.00	0.97	0.95	1.00	0.97	0.95	1.00
Frt	1.00	1.00	0.85	1.00	1.00	0.85	1.00	1.00	0.85	1.00	1.00	0.85
Flt Protected	0.95	1.00	1.00	0.95	1.00	1.00	0.95	1.00	1.00	0.95	1.00	1.00
Satd. Flow (prot)	3433	3539	1583	3433	3539	1583	3433	3539	1583	3433	3539	1583
Flt Permitted	0.95	1.00	1.00	0.95	1.00	1.00	0.95	1.00	1.00	0.95	1.00	1.00
Satd. Flow (perm)	3433	3539	1583	3433	3539	1583	3433	3539	1583	3433	3539	1583
Volume (vph)	483	349	469	121	651	65	378	86	112	39	178	164
Peak-hour factor, PHF	0.95	0.95	0.95	0.95	0.95	0.95	0.95	0.95	0.95	0.95	0.95	0.95
Adj. Flow (vph)	508	367	494	127	685	68	398	91	118	41	187	173
RTOR Reduction (vph)	0	0	0	0	0	0	0	0	75	0	0	0
Lane Group Flow (vph)	508	367	494	127	685	68	398	91	43	41	187	173
Turn Type	Prot		Free	Prot		Free	Prot		pm+ov	Prot		Free
Protected Phases	1	6		5	2		7	4	5	3	8	
Permitted Phases			Free			Free			4			Free
Actuated Green, G (s)	16.9	39.4	100.0	8.1	28.6	100.0	15.7	20.9	29.0	4.1	9.3	100.0
Effective Green, g (s)	21.9	42.4	100.0	12.1	31.6	100.0	18.7	24.4	36.5	8.1	12.8	100.0
Actuated g/C Ratio	0.22	0.42	1.00	0.12	0.32	1.00	0.19	0.24	0.36	0.08	0.13	1.00
Clearance Time (s)	7.0	7.0		7.0	7.0		7.0	6.5	7.0	7.0	6.5	
Vehicle Extension (s)	2.5	4.0		2.5	4.0		2.5	2.5	2.5	2.5	2.5	
Lane Grp Cap (vph)	752	1501	1583	415	1118	1583	642	864	625	278	453	1583
v/s Ratio Prot	c0.15	0.10		0.04	c0.19		c0.12	0.03	0.01	0.01	c0.05	
v/s Ratio Perm			0.31			0.04			0.02			0.11
v/c Ratio	0.68	0.24	0.31	0.31	0.61	0.04	0.62	0.11	0.07	0.15	0.41	0.11
Uniform Delay, d1	35.8	18.5	0.0	40.1	29.0	0.0	37.4	29.3	20.7	42.7	40.1	0.0
Progression Factor	1.00	1.00	1.00	1.00	1.00	1.00	1.00	1.00	1.00	1.00	1.00	1.00
Incremental Delay, d2	2.2	0.4	0.5	0.3	2.5	0.1	1.5	0.0	0.0	0.2	0.4	0.1
Delay (s)	38.0	18.9	0.5	40.4	31.5	0.1	38.9	29.4	20.7	42.9	40.6	0.1
Level of Service	D	B	A	D	C	A	D	C	C	D	D	A
Approach Delay (s)		19.3			30.4			33.9			23.4	
Approach LOS		B			C			C			C	

Intersection Summary			
HCM Average Control Delay	25.5	HCM Level of Service	C
HCM Volume to Capacity ratio	0.60		
Actuated Cycle Length (s)	100.0	Sum of lost time (s)	15.0
Intersection Capacity Utilization	60.8%	ICU Level of Service	B
Analysis Period (min)	15		

c Critical Lane Group

Movement	EBL	EBT	EBR	WBL	WBT	WBR	NBL	NBT	NBR	SBL	SBT	SBR
Lane Configurations												
Ideal Flow (vphpl)	1900	1900	1900	1900	1900	1900	1900	1900	1900	1900	1900	1900
Total Lost time (s)	3.0	3.0	3.0	3.0	3.0	3.0	3.0	3.0	3.0	3.0	3.0	3.0
Lane Util. Factor	0.97	0.95	1.00	0.97	0.95	1.00	0.97	0.95	1.00	1.00	0.95	1.00
Frt	1.00	1.00	0.85	1.00	1.00	0.85	1.00	1.00	0.85	1.00	1.00	0.85
Flt Protected	0.95	1.00	1.00	0.95	1.00	1.00	0.95	1.00	1.00	0.95	1.00	1.00
Satd. Flow (prot)	3433	3539	1583	3433	3539	1583	3433	3539	1583	1770	3539	1583
Flt Permitted	0.95	1.00	1.00	0.62	1.00	1.00	0.95	1.00	1.00	0.95	1.00	1.00
Satd. Flow (perm)	3433	3539	1583	2235	3539	1583	3433	3539	1583	1770	3539	1583
Volume (vph)	72	119	79	190	602	18	161	702	220	4	765	116
Peak-hour factor, PHF	0.95	0.95	0.95	0.95	0.95	0.95	0.95	0.95	0.95	0.95	0.95	0.95
Adj. Flow (vph)	76	125	83	200	634	19	169	739	232	4	805	122
RTOR Reduction (vph)	0	0	61	0	0	14	0	0	124	0	0	75
Lane Group Flow (vph)	76	125	22	200	634	5	169	739	108	4	805	47
Turn Type	Prot		Perm	pm+pt		Perm	Prot		Perm	Prot		Perm
Protected Phases	7	4		3	8		1	6		5	2	
Permitted Phases			4	8		8			6			2
Actuated Green, G (s)	7.7	24.2	24.2	36.7	26.6	26.6	10.1	46.7	46.7	1.8	38.4	38.4
Effective Green, g (s)	11.7	29.2	29.2	45.7	31.6	31.6	14.1	51.2	51.2	5.8	42.9	42.9
Actuated g/C Ratio	0.10	0.26	0.26	0.41	0.28	0.28	0.13	0.46	0.46	0.05	0.38	0.38
Clearance Time (s)	7.0	8.0	8.0	7.0	8.0	8.0	7.0	7.5	7.5	7.0	7.5	7.5
Vehicle Extension (s)	3.0	3.0	3.0	3.0	3.0	3.0	3.0	3.0	3.0	3.0	3.0	3.0
Lane Grp Cap (vph)	358	920	412	1060	996	445	431	1614	722	91	1352	605
v/s Ratio Prot	c0.02	0.04		c0.02	c0.18		c0.05	0.21		0.00	c0.23	
v/s Ratio Perm			0.01	0.05		0.00			0.07			0.03
v/c Ratio	0.21	0.14	0.05	0.19	0.64	0.01	0.39	0.46	0.15	0.04	0.60	0.08
Uniform Delay, d1	46.1	31.9	31.2	21.0	35.3	29.1	45.2	21.0	17.8	50.6	27.8	22.1
Progression Factor	1.00	1.00	1.00	1.00	1.00	1.00	1.00	1.00	1.00	1.00	1.00	1.00
Incremental Delay, d2	0.3	0.1	0.1	0.1	1.3	0.0	0.6	0.2	0.1	0.2	0.7	0.1
Delay (s)	46.4	31.9	31.2	21.1	36.7	29.1	45.7	21.2	17.9	50.8	28.5	22.1
Level of Service	D	C	C	C	D	C	D	C	B	D	C	C
Approach Delay (s)		35.6			32.8			24.2			27.7	
Approach LOS		D			C			C			C	

Intersection Summary			
HCM Average Control Delay	28.5	HCM Level of Service	C
HCM Volume to Capacity ratio	0.54		
Actuated Cycle Length (s)	112.3	Sum of lost time (s)	12.0
Intersection Capacity Utilization	71.6%	ICU Level of Service	C
Analysis Period (min)	15		

c Critical Lane Group

Movement	EBL	EBR	NBL	NBT	SBT	SBR
Lane Configurations						
Ideal Flow (vphpl)	1900	1900	1900	1900	1900	1900
Total Lost time (s)	3.0	3.0	3.0	3.0	3.0	3.0
Lane Util. Factor	1.00	1.00	1.00	0.95	0.95	1.00
Frt	1.00	0.85	1.00	1.00	1.00	0.85
Flt Protected	0.95	1.00	0.95	1.00	1.00	1.00
Satd. Flow (prot)	1770	1583	1770	3539	3539	1583
Flt Permitted	0.95	1.00	0.22	1.00	1.00	1.00
Satd. Flow (perm)	1770	1583	401	3539	3539	1583
Volume (vph)	97	54	172	1133	863	142
Peak-hour factor, PHF	0.95	0.95	0.95	0.95	0.95	0.95
Adj. Flow (vph)	102	57	181	1193	908	149
RTOR Reduction (vph)	0	47	0	0	0	46
Lane Group Flow (vph)	102	10	181	1193	908	103
Turn Type		Perm	pm+pt			pm+ov
Protected Phases	4		1	6	2	4
Permitted Phases		4	6			2
Actuated Green, G (s)	7.9	7.9	45.2	45.2	30.7	38.6
Effective Green, g (s)	11.9	11.9	46.7	48.7	34.2	46.1
Actuated g/C Ratio	0.18	0.18	0.73	0.73	0.51	0.69
Clearance Time (s)	7.0	7.0	7.0	6.5	6.5	7.0
Vehicle Extension (s)	3.0	3.0	4.0	4.0	4.0	3.0
Lane Grp Cap (vph)	316	283	530	2588	1817	1167
v/s Ratio Prot	c0.06		0.06	c0.34	c0.26	0.02
v/s Ratio Perm		0.01	0.19			0.05
v/c Ratio	0.32	0.04	0.34	0.46	0.50	0.09
Uniform Delay, d1	23.8	22.6	4.2	3.6	10.6	3.4
Progression Factor	1.00	1.00	1.00	1.00	1.00	1.00
Incremental Delay, d2	0.6	0.1	0.5	0.2	0.3	0.0
Delay (s)	24.4	22.7	4.7	3.8	10.9	3.4
Level of Service	C	C	A	A	B	A
Approach Delay (s)	23.8			3.9	9.8	
Approach LOS	C			A	A	

Intersection Summary

HCM Average Control Delay	7.6	HCM Level of Service	A
HCM Volume to Capacity ratio	0.46		
Actuated Cycle Length (s)	66.6	Sum of lost time (s)	9.0
Intersection Capacity Utilization	48.8%	ICU Level of Service	A
Analysis Period (min)	15		

c Critical Lane Group

Movement	EBL	EBT	EBR	WBL	WBT	WBR	NBL	NBT	NBR	SBL	SBT	SBR
Lane Configurations												
Ideal Flow (vphpl)	1900	1900	1900	1900	1900	1900	1900	1900	1900	1900	1900	1900
Lane Width	12	12	12	12	12	13	12	12	12	12	12	12
Total Lost time (s)	3.0	3.0	3.0	3.0	3.0	3.0	3.0	3.0	3.0	3.0	3.0	3.0
Lane Util. Factor	0.97	0.91	1.00	0.97	0.86	1.00	0.97	0.95	1.00	0.97	0.95	1.00
Frt	1.00	1.00	0.85	1.00	1.00	0.85	1.00	1.00	0.85	1.00	1.00	0.85
Flt Protected	0.95	1.00	1.00	0.95	1.00	1.00	0.95	1.00	1.00	0.95	1.00	1.00
Satd. Flow (prot)	3433	5085	1583	3433	6408	1636	3433	3539	1583	3433	3539	1583
Flt Permitted	0.95	1.00	1.00	0.95	1.00	1.00	0.95	1.00	1.00	0.95	1.00	1.00
Satd. Flow (perm)	3433	5085	1583	3433	6408	1636	3433	3539	1583	3433	3539	1583
Volume (vph)	258	2150	252	103	658	566	62	227	110	805	535	432
Peak-hour factor, PHF	0.95	0.95	0.95	0.95	0.95	0.95	0.95	0.95	0.95	0.95	0.95	0.95
Adj. Flow (vph)	272	2263	265	108	693	596	65	239	116	847	563	455
RTOR Reduction (vph)	0	0	0	0	0	0	0	0	8	0	0	36
Lane Group Flow (vph)	272	2263	265	108	693	596	65	239	108	847	563	419
Turn Type	Prot		Free	Prot		Free	Prot		pm+ov	Prot		pm+ov
Protected Phases	1	6		5	2		3	8	5	7	4	1
Permitted Phases			Free			Free			8			4
Actuated Green, G (s)	15.2	46.8	130.0	8.7	40.3	130.0	4.0	14.2	22.9	32.8	43.0	58.2
Effective Green, g (s)	19.2	50.8	130.0	12.7	44.3	130.0	8.0	17.7	30.4	36.8	46.5	65.7
Actuated g/C Ratio	0.15	0.39	1.00	0.10	0.34	1.00	0.06	0.14	0.23	0.28	0.36	0.51
Clearance Time (s)	7.0	7.0		7.0	7.0		7.0	6.5	7.0	7.0	6.5	7.0
Vehicle Extension (s)	2.0	3.0		2.0	3.0		2.0	2.0	2.0	2.0	2.0	2.0
Lane Grp Cap (vph)	507	1987	1583	335	2184	1636	211	482	407	972	1266	837
v/s Ratio Prot	0.08	c0.45		0.03	0.11		0.02	0.07	0.03	c0.25	0.16	c0.07
v/s Ratio Perm			0.17			0.36			0.04			0.19
v/c Ratio	0.54	1.14	0.17	0.32	0.32	0.36	0.31	0.50	0.27	0.87	0.44	0.50
Uniform Delay, d1	51.3	39.6	0.0	54.6	31.7	0.0	58.4	52.0	40.7	44.3	31.9	21.3
Progression Factor	1.00	1.00	1.00	1.00	1.00	1.00	1.00	1.00	1.00	1.00	1.00	1.00
Incremental Delay, d2	0.5	69.2	0.2	0.2	0.4	0.6	0.3	0.3	0.1	8.4	0.1	0.2
Delay (s)	51.8	108.8	0.2	54.8	32.1	0.6	58.7	52.3	40.8	52.7	32.0	21.5
Level of Service	D	F	A	D	C	A	E	D	D	D	C	C
Approach Delay (s)		93.0			20.4			50.1			38.8	
Approach LOS		F			C			D			D	

Intersection Summary

HCM Average Control Delay	59.0	HCM Level of Service	E
HCM Volume to Capacity ratio	0.87		
Actuated Cycle Length (s)	130.0	Sum of lost time (s)	6.0
Intersection Capacity Utilization	88.3%	ICU Level of Service	E
Analysis Period (min)	15		

c Critical Lane Group

HCM Signalized Intersection Capacity Analysis
19: Farmwell Road & Smith Switch Road

Kincora
Total Future 2025

Movement	EBL	EBT	EBR	WBL	WBT	WBR	NBL	NBT	NBR	SBL	SBT	SBR
Lane Configurations												
Ideal Flow (vphpl)	1900	1900	1900	1900	1900	1900	1900	1900	1900	1900	1900	1900
Total Lost time (s)	3.0	3.0	3.0	3.0	3.0	3.0	3.0	3.0	3.0	3.0	3.0	3.0
Lane Util. Factor	1.00	0.86	1.00	1.00	0.86	1.00	1.00	0.95	1.00	1.00	0.95	1.00
Frt	1.00	1.00	0.85	1.00	1.00	0.85	1.00	1.00	0.85	1.00	1.00	0.85
Flt Protected	0.95	1.00	1.00	0.95	1.00	1.00	0.95	1.00	1.00	0.95	1.00	1.00
Satd. Flow (prot)	1770	6408	1583	1770	6408	1583	1770	3539	1583	1770	3539	1583
Flt Permitted	0.95	1.00	1.00	0.95	1.00	1.00	0.75	1.00	1.00	0.54	1.00	1.00
Satd. Flow (perm)	1770	6408	1583	1770	6408	1583	1392	3539	1583	997	3539	1583
Volume (vph)	125	3008	58	283	1170	186	91	63	272	104	14	28
Peak-hour factor, PHF	0.95	0.95	0.95	0.95	0.95	0.95	0.95	0.95	0.95	0.95	0.95	0.95
Adj. Flow (vph)	132	3166	61	298	1232	196	96	66	286	109	15	29
RTOR Reduction (vph)	0	0	28	0	0	63	0	0	0	0	0	21
Lane Group Flow (vph)	132	3166	33	298	1232	133	96	66	286	109	15	8
Turn Type	Prot		pm+ov	Prot		pm+ov	pm+pt		Free	pm+pt		pm+ov
Protected Phases	1	6	3	5	2	7	3	8		7	4	1
Permitted Phases			6			2	8		Free	4		4
Actuated Green, G (s)	10.2	50.0	54.0	20.2	59.5	69.2	9.6	5.6	110.0	20.3	11.3	21.5
Effective Green, g (s)	14.2	53.5	59.5	23.7	63.0	74.7	15.1	9.1	110.0	23.8	14.8	29.0
Actuated g/C Ratio	0.13	0.49	0.54	0.22	0.57	0.68	0.14	0.08	1.00	0.22	0.13	0.26
Clearance Time (s)	7.0	6.5	5.0	6.5	6.5	5.0	5.0	6.5		5.0	6.5	7.0
Vehicle Extension (s)	2.0	3.0	2.0	2.0	3.0	2.0	2.0	2.0		2.0	2.0	2.0
Lane Grp Cap (vph)	228	3117	899	381	3670	1118	212	293	1583	298	476	461
v/s Ratio Prot	0.07	c0.49	0.00	c0.17	0.19	0.01	c0.02	0.02		c0.04	0.00	0.00
v/s Ratio Perm			0.02			0.07	0.04		0.18	c0.04		0.00
v/c Ratio	0.58	1.02	0.04	0.78	0.34	0.12	0.45	0.23	0.18	0.37	0.03	0.02
Uniform Delay, d1	45.1	28.2	11.8	40.7	12.4	6.2	43.3	47.2	0.0	36.0	41.4	30.0
Progression Factor	1.00	1.00	1.00	1.00	1.00	1.00	1.00	1.00	1.00	1.00	1.00	1.00
Incremental Delay, d2	2.2	20.2	0.0	9.3	0.2	0.0	0.6	0.1	0.3	0.3	0.1	0.0
Delay (s)	47.3	48.4	11.8	50.0	12.7	6.2	43.8	47.3	0.3	36.3	41.5	30.0
Level of Service	D	D	B	D	B	A	D	D	A	D	D	C
Approach Delay (s)		47.7			18.4			16.5			35.6	
Approach LOS		D			B			B			D	

Intersection Summary			
HCM Average Control Delay	36.0	HCM Level of Service	D
HCM Volume to Capacity ratio	0.81		
Actuated Cycle Length (s)	110.0	Sum of lost time (s)	9.0
Intersection Capacity Utilization	81.7%	ICU Level of Service	D
Analysis Period (min)	15		

c Critical Lane Group

HCM Signalized Intersection Capacity Analysis
21: Waxpool Road & Pacific Boulevard

Kincora
Total Future 2025

Movement	EBL	EBT	EBR	WBL	WBT	WBR	NBL	NBT	NBR	SBL	SBT	SBR
Lane Configurations												
Ideal Flow (vphpl)	1900	1900	1900	1900	1900	1900	1900	1900	1900	1900	1900	1900
Total Lost time (s)	3.0	3.0	3.0	3.0	3.0	3.0	3.0	3.0	3.0	3.0	3.0	3.0
Lane Util. Factor	0.94	0.86	1.00	0.97	0.86	1.00	0.97	0.95	1.00	0.97	0.95	1.00
Frt	1.00	1.00	0.85	1.00	1.00	0.85	1.00	1.00	0.85	1.00	1.00	0.85
Flt Protected	0.95	1.00	1.00	0.95	1.00	1.00	0.95	1.00	1.00	0.95	1.00	1.00
Satd. Flow (prot)	4990	6408	1583	3433	6408	1583	3433	3539	1583	3433	3539	1583
Flt Permitted	0.95	1.00	1.00	0.95	1.00	1.00	0.95	1.00	1.00	0.95	1.00	1.00
Satd. Flow (perm)	4990	6408	1583.	3433	6408	1583	3433	3539	1583	3433	3539	1583
Volume (vph)	1534	3878	237	438	2888	368	262	234	105	180	114	423
Peak-hour factor, PHF	0.95	0.95	0.95	0.95	0.95	0.95	0.95	0.95	0.95	0.95	0.95	0.95
Adj. Flow (vph)	1615	4082	249	461	3040	387	276	246	111	189	120	445
RTOR Reduction (vph)	0	0	0	0	0	0	0	0	0	0	0	0
Lane Group Flow (vph)	1615	4082	249	461	3040	387	276	246	111	189	120	445
Turn Type	Prot		Free	Prot		Free	Prot		Free	Prot		Free
Protected Phases	1	6		5	2		7	4		3	8	
Permitted Phases			Free			Free			Free			Free
Actuated Green, G (s)	8.0	94.0	145.0	9.0	95.0	145.0	9.0	5.0	145.0	9.0	5.0	145.0
Effective Green, g (s)	12.0	98.0	145.0	13.0	99.0	145.0	13.0	9.0	145.0	13.0	9.0	145.0
Actuated g/C Ratio	0.08	0.68	1.00	0.09	0.68	1.00	0.09	0.06	1.00	0.09	0.06	1.00
Clearance Time (s)	7.0	7.0		7.0	7.0		7.0	7.0		7.0	7.0	
Vehicle Extension (s)	2.0	3.0		2.0	3.0		3.0	3.0		3.0	3.0	
Lane Grp Cap (vph)	413	4331	1583	308	4375	1583	308	220	1583	308	220	1583
v/s Ratio Prot	c0.32	c0.64		0.13	0.47		c0.08	c0.07		0.06	0.03	
v/s Ratio Perm			0.16			0.24			0.07			c0.28
v/c Ratio	3.91	0.94	0.16	1.50	0.69	0.24	0.90	1.12	0.07	0.61	0.55	0.28
Uniform Delay, d1	66.5	21.0	0.0	66.0	13.9	0.0	65.3	68.0	0.0	63.6	66.0	0.0
Progression Factor	1.00	1.00	1.00	1.00	1.00	1.00	1.00	1.00	1.00	1.00	1.00	1.00
Incremental Delay, d2	1315.5	5.6	0.2	239.9	0.9	0.4	26.5	96.0	0.1	3.6	2.8	0.4
Delay (s)	1382.0	26.6	0.2	305.9	14.8	0.4	91.8	164.0	0.1	67.2	68.8	0.4
Level of Service	F	C	A	F	B	A	F	F	A	E	E	A
Approach Delay (s)		393.6			47.9			103.8			28.0	
Approach LOS		F			D			F			C	

Intersection Summary			
HCM Average Control Delay	232.9	HCM Level of Service	F
HCM Volume to Capacity ratio	1.21		
Actuated Cycle Length (s)	145.0	Sum of lost time (s)	12.0
Intersection Capacity Utilization	96.0%	ICU Level of Service	F
Analysis Period (min)	15		

c Critical Lane Group

HCM Signalized Intersection Capacity Analysis
22: Church Road & Ruritan Circle

Kincora
Total Future 2025

Movement	EBL	EBT	EBR	WBL	WBT	WBR	NBL	NBT	NBR	SBL	SBT	SBR
Lane Configurations												
Ideal Flow (vphpl)	1900	1900	1900	1900	1900	1900	1900	1900	1900	1900	1900	1900
Total Lost time (s)	3.0	3.0		3.0	3.0			3.0	3.0		3.0	
Lane Util. Factor	1.00	0.95		1.00	0.95			1.00	1.00		1.00	
Frt	1.00	0.98		1.00	1.00			1.00	0.85		0.91	
Flt Protected	0.95	1.00		0.95	1.00			0.95	1.00		0.99	
Satd. Flow (prot)	1770	3463		1770	3537			1776	1583		1676	
Flt Permitted	0.17	1.00		0.10	1.00			0.72	1.00		0.95	
Satd. Flow (perm)	318	3463		193	3537			1332	1583		1599	
Volume (vph)	24	1124	188	218	1434	7	118	3	144	4	3	14
Peak-hour factor, PHF	0.95	0.95	0.95	0.95	0.95	0.95	0.95	0.95	0.95	0.95	0.95	0.95
Adj. Flow (vph)	25	1183	198	229	1509	7	124	3	152	4	3	15
RTOR Reduction (vph)	0	9	0	0	0	0	0	0	0	0	13	0
Lane Group Flow (vph)	25	1372	0	229	1516	0	0	127	152	0	9	0
Turn Type	Perm			pm+pt			Perm		pm+ov	Perm		
Protected Phases		6		5	2			4	5		8	
Permitted Phases	6			2			4		4	8		
Actuated Green, G (s)	45.6	45.6		61.9	61.9			10.6	21.4		10.6	
Effective Green, g (s)	48.6	48.6		64.9	64.9			13.6	26.9		13.6	
Actuated g/C Ratio	0.58	0.58		0.77	0.77			0.16	0.32		0.16	
Clearance Time (s)	6.0	6.0		5.5	6.0			6.0	5.5		6.0	
Vehicle Extension (s)	4.0	4.0		2.0	4.0			3.0	2.0		3.0	
Lane Grp Cap (vph)	183	1992		396	2717			214	560		257	
v/s Ratio Prot		c0.40		c0.09	0.43				0.04			
v/s Ratio Perm	0.08			0.35				c0.10	0.05		0.01	
v/c Ratio	0.14	0.69		0.58	0.56			0.59	0.27		0.04	
Uniform Delay, d1	8.3	12.6		13.6	4.0			32.9	21.5		29.9	
Progression Factor	1.00	1.00		1.00	1.00			1.00	1.00		1.00	
Incremental Delay, d2	0.5	1.1		1.3	0.3			4.4	0.1		0.1	
Delay (s)	8.7	13.7		14.9	4.3			37.3	21.6		30.0	
Level of Service	A	B		B	A			D	C		C	
Approach Delay (s)		13.6			5.7			28.7			30.0	
Approach LOS		B			A			C			C	

Intersection Summary			
HCM Average Control Delay	10.9	HCM Level of Service	B
HCM Volume to Capacity ratio	0.65		
Actuated Cycle Length (s)	84.5	Sum of lost time (s)	9.0
Intersection Capacity Utilization	75.7%	ICU Level of Service	D
Analysis Period (min)	15		

c Critical Lane Group

HCM Signalized Intersection Capacity Analysis
23: Church Road & Potomac View Road

Kincora
Total Future 2025

Movement	EBL	EBT	WBT	WBR	SBL	SBR
Lane Configurations						
Ideal Flow (vphpl)	1900	1900	1900	1900	1900	1900
Total Lost time (s)	3.0	3.0	3.0	3.0	3.0	3.0
Lane Util. Factor	0.97	0.95	0.91	0.91	0.97	1.00
Frt	1.00	1.00	1.00	0.85	1.00	0.85
Flt Protected	0.95	1.00	1.00	1.00	0.95	1.00
Satd. Flow (prot)	3433	3539	3390	1441	3433	1583
Flt Permitted	0.95	1.00	1.00	1.00	0.95	1.00
Satd. Flow (perm)	3433	3539	3390	1441	3433	1583
Volume (vph)	758	514	624	416	329	618
Peak-hour factor, PHF	0.95	0.95	0.95	0.95	0.95	0.95
Adj. Flow (vph)	798	541	657	438	346	651
RTOR Reduction (vph)	0	0	0	15	0	449
Lane Group Flow (vph)	798	541	657	423	346	202
Turn Type	Prot			pm+ov		Perm
Protected Phases	5	2	6	4	4	
Permitted Phases				6		4
Actuated Green, G (s)	21.6	48.3	19.7	37.2	17.5	17.5
Effective Green, g (s)	25.6	52.3	23.7	45.7	22.0	22.0
Actuated g/C Ratio	0.32	0.65	0.30	0.57	0.27	0.27
Clearance Time (s)	7.0	7.0	7.0	7.5	7.5	7.5
Vehicle Extension (s)	2.0	3.0	3.0	3.0	3.0	3.0
Lane Grp Cap (vph)	1094	2305	1001	874	941	434
v/s Ratio Prot	c0.23	0.15	c0.19	c0.13	0.10	
v/s Ratio Perm				0.16		0.13
v/c Ratio	0.73	0.23	0.66	0.48	0.37	0.46
Uniform Delay, d1	24.3	5.8	24.7	10.3	23.5	24.2
Progression Factor	1.00	1.00	1.00	1.00	1.00	1.00
Incremental Delay, d2	2.1	0.1	1.6	0.4	0.2	0.8
Delay (s)	26.4	5.8	26.3	10.7	23.8	25.0
Level of Service	C	A	C	B	C	C
Approach Delay (s)		18.1	20.1		24.6	
Approach LOS		B	C		C	

Intersection Summary			
HCM Average Control Delay	20.6	HCM Level of Service	C
HCM Volume to Capacity ratio	0.62		
Actuated Cycle Length (s)	80.3	Sum of lost time (s)	6.0
Intersection Capacity Utilization	66.6%	ICU Level of Service	C
Analysis Period (min)	15		

c Critical Lane Group

Movement	EBL	EBT	EBR	WBL	WBT	WBR	NBL	NBT	NBR	SBL	SBT	SBR
Lane Configurations												
Ideal Flow (vphpl)	1900	1900	1900	1900	1900	1900	1900	1900	1900	1900	1900	1900
Total Lost time (s)	4.0		4.0	4.0		4.0	4.0	4.0	4.0	4.0	4.0	4.0
Lane Util. Factor	0.97		1.00	0.97		0.88	0.97	0.95	1.00	0.97	0.95	1.00
Frt	1.00		0.85	1.00		0.85	1.00	1.00	0.85	1.00	1.00	0.85
Flt Protected	0.95		1.00	0.95		1.00	0.95	1.00	1.00	0.95	1.00	1.00
Satd. Flow (prot)	3433		1583	3433		2787	3433	3539	1583	3433	3539	1583
Flt Permitted	0.95		1.00	0.95		1.00	0.95	1.00	1.00	0.95	1.00	1.00
Satd. Flow (perm)	3433		1583	3433		2787	3433	3539	1583	3433	3539	1583
Volume (vph)	139	0	281	27	0	324	610	1444	203	1390	1118	237
Peak-hour factor, PHF	0.95	0.95	0.95	0.95	0.95	0.95	0.95	0.95	0.95	0.95	0.95	0.95
Adj. Flow (vph)	146	0	296	28	0	341	642	1520	214	1463	1177	249
RTOR Reduction (vph)	0	0	0	0	0	0	0	0	81	0	0	85
Lane Group Flow (vph)	146	0	296	28	0	341	642	1520	133	1463	1177	164
Turn Type	Prot		Free	Prot		Free	Prot		pm+ov	Prot		pm+ov
Protected Phases	7	4		3	8		5	2	3	1	6	7
Permitted Phases			Free			Free			2			6
Actuated Green, G (s)	5.0		116.3	5.0		116.3	25.5	58.0	63.0	32.3	64.8	69.8
Effective Green, g (s)	8.0		116.3	8.0		116.3	28.5	61.0	69.0	35.3	67.8	75.8
Actuated g/C Ratio	0.07		1.00	0.07		1.00	0.25	0.52	0.59	0.30	0.58	0.65
Clearance Time (s)	7.0			7.0			7.0	7.0	7.0	7.0	7.0	7.0
Vehicle Extension (s)	2.0			2.0			2.0	3.0	2.0	2.0	3.0	2.0
Lane Grp Cap (vph)	236		1583	236		2787	841	1856	994	1042	2063	1086
v/s Ratio Prot	c0.04			0.01			0.19	c0.43	0.01	c0.43	0.33	0.01
v/s Ratio Perm			0.19			0.12			0.07			0.09
v/c Ratio	0.62		0.19	0.12		0.12	0.76	0.82	0.13	1.40	0.57	0.15
Uniform Delay, d1	52.7		0.0	50.8		0.0	40.8	23.0	10.4	40.5	15.2	7.8
Progression Factor	1.00		1.00	1.00		1.00	1.00	1.00	1.00	1.00	1.00	1.00
Incremental Delay, d2	3.4		0.3	0.1		0.1	3.7	2.9	0.0	187.6	0.4	0.0
Delay (s)	56.0		0.3	50.9		0.1	44.5	26.0	10.5	228.1	15.5	7.8
Level of Service	E		A	D		A	D	C	B	F	B	A
Approach Delay (s)		18.7			3.9			29.6			122.5	
Approach LOS		B			A			C			F	

Intersection Summary			
HCM Average Control Delay	71.4	HCM Level of Service	E
HCM Volume to Capacity ratio	1.00		
Actuated Cycle Length (s)	116.3	Sum of lost time (s)	12.0
Intersection Capacity Utilization	100.2%	ICU Level of Service	G
Analysis Period (min)	15		

c Critical Lane Group

Movement	EBL	EBT	EBR	WBL	WBT	WBR	NBL	NBT	NBR	SBL	SBT	SBR
Lane Configurations												
Sign Control		Free			Free			Stop			Stop	
Grade		0%			0%			0%			0%	
Volume (veh/h)	0	1143	5	0	290	0	5	0	0	0	0	0
Peak Hour Factor	0.92	0.92	0.92	0.92	0.92	0.92	0.92	0.92	0.92	0.92	0.92	0.92
Hourly flow rate (vph)	0	1242	5	0	315	0	5	0	0	0	0	0
Pedestrians												
Lane Width (ft)												
Walking Speed (ft/s)												
Percent Blockage												
Right turn flare (veh)												
Median type								None			None	
Median storage veh)												
Upstream signal (ft)												
pX, platoon unblocked												
vC, conflicting volume	315			1248			1400	1558	621	936	1563	158
vC1, stage 1 conf vol												
vC2, stage 2 conf vol												
vCu, unblocked vol	315			1248			1400	1558	621	936	1563	158
tC, single (s)	4.1			4.1			7.5	6.5	6.9	7.5	6.5	6.9
tC, 2 stage (s)												
tF (s)	2.2			2.2			3.5	4.0	3.3	3.5	4.0	3.3
p0 queue free %	100			100			95	100	100	100	100	100
cM capacity (veh/h)	1242			554			100	112	430	220	111	860

Direction, Lane #	EB 1	EB 2	EB 3	EB 4	WB 1	WB 2	WB 3	WB 4	NB 1	NB 2	SB 1	SB 2
Volume Total	0	621	621	5	0	158	158	0	5	0	0	0
Volume Left	0	0	0	0	0	0	0	0	5	0	0	0
Volume Right	0	0	0	5	0	0	0	0	0	0	0	0
cSH	1700	1700	1700	1700	1700	1700	1700	1700	100	1700	1700	1700
Volume to Capacity	0.00	0.37	0.37	0.00	0.00	0.09	0.09	0.00	0.05	0.00	0.00	0.00
Queue Length 95th (ft)	0	0	0	0	0	0	0	0	4	0	0	0
Control Delay (s)	0.0	0.0	0.0	0.0	0.0	0.0	0.0	0.0	43.0	0.0	0.0	0.0
Lane LOS									E	A	A	A
Approach Delay (s)	0.0				0.0				43.0		0.0	
Approach LOS									E		A	

Intersection Summary			
Average Delay	0.1		
Intersection Capacity Utilization	41.6%	ICU Level of Service	A
Analysis Period (min)	15		

Movement	EBL	EBT	EBR	WBL	WBT	WBR	NBL	NBT	NBR	SBL	SBT	SBR
Lane Configurations												
Ideal Flow (vphpl)	1900	1900	1900	1900	1900	1900	1900	1900	1900	1900	1900	1900
Total Lost time (s)	4.0	4.0		4.0	4.0	4.0		4.0	4.0	4.0	4.0	4.0
Lane Util. Factor	1.00	0.95		1.00	0.95	1.00		0.95	1.00	1.00	0.95	1.00
Frt	1.00	1.00		1.00	1.00	0.85		1.00	0.85	1.00	1.00	0.85
Flt Protected	0.95	1.00		0.95	1.00	1.00		1.00	1.00	0.95	1.00	1.00
Satd. Flow (prot)	1770	3539		1770	3539	1583		3539	1583	1770	3539	1583
Flt Permitted	0.95	1.00		0.95	1.00	1.00		1.00	1.00	0.95	1.00	1.00
Satd. Flow (perm)	1770	3539		1770	3539	1583		3539	1583	1770	3539	1583
Volume (vph)	324	193	0	697	395	1567	0	1183	103	407	417	132
Peak-hour factor, PHF	0.95	0.95	0.95	0.95	0.95	0.95	0.95	0.95	0.95	0.95	0.95	0.95
Adj. Flow (vph)	341	203	0	734	416	1649	0	1245	108	428	439	139
RTOR Reduction (vph)	0	0	0	0	0	131	0	0	60	0	0	84
Lane Group Flow (vph)	341	203	0	734	416	1518	0	1245	48	428	439	55
Turn Type	Prot		Perm	Prot		Perm	Prot		Perm	Prot		Perm
Protected Phases	7	4		3	8		5	2		1	6	
Permitted Phases			4			8			2			6
Actuated Green, G (s)	13.0	10.0		51.0	48.0	48.0		25.0	25.0	16.0	48.0	48.0
Effective Green, g (s)	16.0	13.0		54.0	51.0	51.0		28.0	28.0	19.0	51.0	51.0
Actuated g/C Ratio	0.12	0.10		0.42	0.39	0.39		0.22	0.22	0.15	0.39	0.39
Clearance Time (s)	7.0	7.0		7.0	7.0	7.0		7.0	7.0	7.0	7.0	7.0
Vehicle Extension (s)	2.0	2.0		2.0	2.0	2.0		2.0	2.0	2.0	2.0	2.0
Lane Grp Cap (vph)	218	354		735	1388	621		762	341	259	1388	621
v/s Ratio Prot	c0.19	0.06		0.41	0.12			c0.35		c0.24	0.12	
v/s Ratio Perm						c0.96			0.03			0.03
v/c Ratio	1.56	0.57		1.00	0.30	2.44		1.63	0.14	1.65	0.32	0.09
Uniform Delay, d1	57.0	55.9		36.0	27.2	39.5		51.0	41.3	55.5	27.4	24.9
Progression Factor	1.00	1.00		1.00	1.00	1.00		1.00	1.00	1.00	1.00	1.00
Incremental Delay, d2	275.0	1.4		32.6	0.0	654.7		291.2	0.1	310.3	0.0	0.0
Delay (s)	332.0	57.3		70.5	27.2	694.2		342.2	41.3	365.8	27.5	24.9
Level of Service	F	E		E	C	F		F	D	F	C	C
Approach Delay (s)		229.5			491.5			318.2			171.0	
Approach LOS		F			F			F			F	

Intersection Summary			
HCM Average Control Delay	339.4	HCM Level of Service	F
HCM Volume to Capacity ratio	1.99		
Actuated Cycle Length (s)	130.0	Sum of lost time (s)	16.0
Intersection Capacity Utilization	157.7%	ICU Level of Service	H
Analysis Period (min)	15		

c Critical Lane Group

Movement	WBL	WBR	NBT	NBR	SBL	SBT
Lane Configurations						
Sign Control	Stop		Free			Free
Grade	0%		0%			0%
Volume (veh/h)	0	83	1203	455	0	1114
Peak Hour Factor	0.95	0.95	0.95	0.95	0.95	0.95
Hourly flow rate (vph)	0	87	1266	479	0	1173
Pedestrians						
Lane Width (ft)						
Walking Speed (ft/s)						
Percent Blockage						
Right turn flare (veh)						
Median type	None					
Median storage veh)						
Upstream signal (ft)			535			850
pX, platoon unblocked	0.77	0.74			0.74	
vC, conflicting volume	2092	873			1745	
vC1, stage 1 conf vol						
vC2, stage 2 conf vol						
vCu, unblocked vol	1868	471			1655	
tC, single (s)	6.8	6.9			4.1	
tC, 2 stage (s)						
tF (s)	3.5	3.3			2.2	
p0 queue free %	100	78			100	
cM capacity (veh/h)	49	398			285	

Direction, Lane #	WB 1	NB 1	NB 2	SB 1	SB 2
Volume Total	87	844	901	586	586
Volume Left	0	0	0	0	0
Volume Right	87	0	479	0	0
cSH	398	1700	1700	1700	1700
Volume to Capacity	0.22	0.50	0.53	0.34	0.34
Queue Length 95th (ft)	21	0	0	0	0
Control Delay (s)	16.6	0.0	0.0	0.0	0.0
Lane LOS	C				
Approach Delay (s)	16.6	0.0		0.0	
Approach LOS	C				

Intersection Summary			
Average Delay	0.5		
Intersection Capacity Utilization	59.6%	ICU Level of Service	B
Analysis Period (min)	15		

Movement	WBL	WBR	NBT	NBR	SBL	SBT
Lane Configurations						
Ideal Flow (vphpl)	1900	1900	1900	1900	1900	1900
Total Lost time (s)	4.0		4.0			4.0
Lane Util. Factor	1.00		0.95			0.95
Frt	0.95		1.00			1.00
Flt Protected	0.97		1.00			1.00
Satd. Flow (prot)	1711		3533			3535
Flt Permitted	0.97		1.00			0.85
Satd. Flow (perm)	1711		3533			3006
Volume (vph)	36	24	1634	19	29	1085
Peak-hour factor, PHF	0.95	0.95	0.95	0.95	0.95	0.95
Adj. Flow (vph)	38	25	1720	20	31	1142
RTOR Reduction (vph)	19	0	1	0	0	0
Lane Group Flow (vph)	44	0	1739	0	0	1173
Turn Type					Perm	
Protected Phases	8		2			6
Permitted Phases					6	
Actuated Green, G (s)	8.9		67.4			67.4
Effective Green, g (s)	11.9		70.4			70.4
Actuated g/C Ratio	0.13		0.78			0.78
Clearance Time (s)	7.0		7.0			7.0
Vehicle Extension (s)	2.0		2.0			2.0
Lane Grp Cap (vph)	225		2754			2344
v/s Ratio Prot	c0.03		c0.49			
v/s Ratio Perm						0.39
v/c Ratio	0.20		0.63			0.50
Uniform Delay, d1	34.9		4.3			3.6
Progression Factor	1.00		1.00			1.00
Incremental Delay, d2	0.2		0.4			0.1
Delay (s)	35.1		4.7			3.7
Level of Service	D		A			A
Approach Delay (s)	35.1		4.7			3.7
Approach LOS	D		A			A

Intersection Summary			
HCM Average Control Delay	4.9	HCM Level of Service	A
HCM Volume to Capacity ratio	0.57		
Actuated Cycle Length (s)	90.3	Sum of lost time (s)	8.0
Intersection Capacity Utilization	65.8%	ICU Level of Service	C
Analysis Period (min)	15		

c Critical Lane Group

Movement	WBL	WBR	NBT	NBR	SBL	SBT
Lane Configurations						
Sign Control	Stop		Free			Free
Grade	0%		0%			0%
Volume (veh/h)	0	4	3050	24	0	956
Peak Hour Factor	0.95	0.95	0.95	0.95	0.95	0.95
Hourly flow rate (vph)	0	4	3211	25	0	1006
Pedestrians						
Lane Width (ft)						
Walking Speed (ft/s)						
Percent Blockage						
Right turn flare (veh)						
Median type	None					
Median storage veh)						
Upstream signal (ft)			844			
pX, platoon unblocked	0.80	0.80			0.80	
vC, conflicting volume	3726	1618			3236	
vC1, stage 1 conf vol						
vC2, stage 2 conf vol						
vCu, unblocked vol	4159	1522			3546	
tC, single (s)	6.8	*5.2			4.1	
tC, 2 stage (s)						
tF (s)	3.5	3.3			2.2	
p0 queue free %	100	98			100	
cM capacity (veh/h)	1	179			54	

Direction, Lane #	WB 1	NB 1	NB 2	SB 1	SB 2
Volume Total	4	2140	1095	503	503
Volume Left	0	0	0	0	0
Volume Right	4	0	25	0	0
cSH	179	1700	1700	1700	1700
Volume to Capacity	0.02	1.26	0.64	0.30	0.30
Queue Length 95th (ft)	2	0	0	0	0
Control Delay (s)	25.6	0.0	0.0	0.0	0.0
Lane LOS	D				
Approach Delay (s)	25.6	0.0		0.0	
Approach LOS	D				

Intersection Summary			
Average Delay	0.0		
Intersection Capacity Utilization	95.1%	ICU Level of Service	F
Analysis Period (min)	15		

* User Entered Value

Movement	WBL	WBR	NBT	NBR	SBL	SBT
Lane Configurations						
Sign Control	Stop		Free			Free
Grade	0%		0%			0%
Volume (veh/h)	0	4	3030	24	0	956
Peak Hour Factor	0.95	0.95	0.95	0.95	0.95	0.95
Hourly flow rate (vph)	0	4	3189	25	0	1006
Pedestrians						
Lane Width (ft)						
Walking Speed (ft/s)						
Percent Blockage						
Right turn flare (veh)						
Median type	None					
Median storage veh)						
Upstream signal (ft)						
pX, platoon unblocked						
vC, conflicting volume	3705	1607			3215	
vC1, stage 1 conf vol						
vC2, stage 2 conf vol						
vCu, unblocked vol	3705	1607			3215	
tC, single (s)	6.8	*5.2			4.1	
tC, 2 stage (s)						
tF (s)	3.5	3.3			2.2	
p0 queue free %	100	98			100	
cM capacity (veh/h)	3	204			92	

Direction, Lane #	WB 1	NB 1	NB 2	SB 1	SB 2
Volume Total	4	2126	1088	503	503
Volume Left	0	0	0	0	0
Volume Right	4	0	25	0	0
cSH	204	1700	1700	1700	1700
Volume to Capacity	0.02	1.25	0.64	0.30	0.30
Queue Length 95th (ft)	2	0	0	0	0
Control Delay (s)	23.0	0.0	0.0	0.0	0.0
Lane LOS	C				
Approach Delay (s)	23.0	0.0		0.0	
Approach LOS	C				

Intersection Summary			
Average Delay	0.0		
Intersection Capacity Utilization	94.5%	ICU Level of Service	F
Analysis Period (min)	15		

* User Entered Value

Movement	EBL	EBT	EBR	WBL	WBT	WBR	NBL	NBT	NBR	SBL	SBT	SBR
Lane Configurations												
Sign Control		Stop			Stop			Free			Free	
Grade		0%			0%			0%			0%	
Volume (veh/h)	0	0	95	0	0	4	0	3024	10	0	860	421
Peak Hour Factor	0.95	0.95	0.95	0.95	0.95	0.95	0.95	0.95	0.95	0.95	0.95	0.95
Hourly flow rate (vph)	0	0	100	0	0	4	0	3183	11	0	905	443
Pedestrians												
Lane Width (ft)												
Walking Speed (ft/s)												
Percent Blockage												
Right turn flare (veh)												
Median type		None			None							
Median storage veh)												
Upstream signal (ft)												
pX, platoon unblocked												
vC, conflicting volume	2723	4321	674	3741	4537	1597	1348			3194		
vC1, stage 1 conf vol												
vC2, stage 2 conf vol												
vCu, unblocked vol	2723	4321	674	3741	4537	1597	1348			3194		
tC, single (s)	7.5	6.5	6.9	7.5	6.5	*5.2	4.1			4.1		
tC, 2 stage (s)												
tF (s)	3.5	4.0	3.3	3.5	4.0	3.3	2.2			2.2		
p0 queue free %	100	100	75	100	100	98	100			100		
cM capacity (veh/h)	10	2	397	1	1	206	507			94		

Direction, Lane #	EB 1	WB 1	NB 1	NB 2	SB 1	SB 2
Volume Total	100	4	2122	1072	604	745
Volume Left	0	0	0	0	0	0
Volume Right	100	4	0	11	0	443
cSH	397	206	1700	1700	1700	1700
Volume to Capacity	0.25	0.02	1.25	0.63	0.36	0.44
Queue Length 95th (ft)	25	2	0	0	0	0
Control Delay (s)	17.1	22.8	0.0	0.0	0.0	0.0
Lane LOS	C	C				
Approach Delay (s)	17.1	22.8	0.0		0.0	
Approach LOS	C	C				

Intersection Summary			
Average Delay	0.4		
Intersection Capacity Utilization	93.9%	ICU Level of Service	F
Analysis Period (min)	15		

* User Entered Value

Movement	EBL	EBR	NBL	NBT	SBT	SBR
Lane Configurations						
Sign Control	Stop			Free	Free	
Grade	0%			0%	0%	
Volume (veh/h)	0	99	0	3028	1182	430
Peak Hour Factor	0.95	0.95	0.95	0.95	0.95	0.95
Hourly flow rate (vph)	0	104	0	3187	1244	453
Pedestrians						
Lane Width (ft)						
Walking Speed (ft/s)						
Percent Blockage						
Right turn flare (veh)						
Median type	None					
Median storage veh)						
Upstream signal (ft)					936	
pX, platcon unblocked	0.81	0.81	0.81			
vC, conflicting volume	3064	848	1697			
vC1, stage 1 conf vol						
vC2, stage 2 conf vol						
vCu, unblocked vol	3312	581	1626			
tC, single (s)	6.8	6.9	4.1			
tC, 2 stage (s)						
tF (s)	3.5	3.3	2.2			
p0 queue free %	100	72	100			
cM capacity (veh/h)	5	371	321			

Direction, Lane #	EB 1	NB 1	NB 2	SB 1	SB 2
Volume Total	104	1594	1594	829	867
Volume Left	0	0	0	0	0
Volume Right	104	0	0	0	453
cSH	371	1700	1700	1700	1700
Volume to Capacity	0.28	0.94	0.94	0.49	0.51
Queue Length 95th (ft)	28	0	0	0	0
Control Delay (s)	18.5	0.0	0.0	0.0	0.0
Lane LOS	C				
Approach Delay (s)	18.5	0.0		0.0	
Approach LOS	C				

Intersection Summary			
Average Delay	0.4		
Intersection Capacity Utilization	87.0%	ICU Level of Service	E
Analysis Period (min)	15		

Movement	EBL	EBR	NBL	NBT	SBT	SBR
Lane Configurations						
Ideal Flow (vphpl)	1900	1900	1900	1900	1900	1900
Total Lost time (s)	4.0			4.0	4.0	
Lane Util. Factor	1.00			0.95	0.95	
Frt	0.90			1.00	1.00	
Flt Protected	0.99			0.99	1.00	
Satd. Flow (prot)	1659			3497	3532	
Flt Permitted	0.99			0.49	1.00	
Satd. Flow (perm)	1659			1740	3532	
Volume (vph)	54	138	728	2300	1474	19
Peak-hour factor, PHF	0.95	0.95	0.95	0.95	0.95	0.95
Adj. Flow (vph)	57	145	766	2421	1552	20
RTOR Reduction (vph)	66	0	0	0	1	0
Lane Group Flow (vph)	136	0	0	3187	1571	0
Turn Type			Perm			
Protected Phases	4			2	6	
Permitted Phases			2			
Actuated Green, G (s)	14.2			98.1	100.1	
Effective Green, g (s)	17.2			101.1	101.1	
Actuated g/C Ratio	0.14			0.80	0.80	
Clearance Time (s)	7.0			7.0	5.0	
Vehicle Extension (s)	2.0			2.0	2.0	
Lane Grp Cap (vph)	226			1393	2827	
v/s Ratio Prot	c0.08				0.44	
v/s Ratio Perm				c1.83		
v/c Ratio	0.60			4.03dl	0.56	
Uniform Delay, d1	51.3			12.6	4.5	
Progression Factor	1.00			1.00	1.00	
Incremental Delay, d2	3.1			581.8	0.1	
Delay (s)	54.4			594.4	4.7	
Level of Service	D			F	A	
Approach Delay (s)	54.4			594.4	4.7	
Approach LOS	D			F	A	

Intersection Summary			
HCM Average Control Delay	385.6	HCM Level of Service	F
HCM Volume to Capacity ratio	2.04		
Actuated Cycle Length (s)	126.3	Sum of lost time (s)	8.0
Intersection Capacity Utilization	147.6%	ICU Level of Service	H
Analysis Period (min)	15		

dl Defacto Left Lane. Recode with 1 though lane as a left lane.
c Critical Lane Group

Movement	EBL	EBR	NBL	NBT	SBT	SBR
Lane Configurations						
Ideal Flow (vphpl)	1900	1900	1900	1900	1900	1900
Total Lost time (s)	4.0			4.0	4.0	
Lane Util. Factor	1.00			0.95	0.95	
Frt	0.90			1.00	1.00	
Flt Protected	0.99			0.98	1.00	
Satd. Flow (prot)	1656			3484	3529	
Flt Permitted	0.99			0.50	1.00	
Satd. Flow (perm)	1656			1762	3529	
Volume (vph)	75	208	744	1610	1286	26
Peak-hour factor, PHF	0.95	0.95	0.95	0.95	0.95	0.95
Adj. Flow (vph)	79	219	783	1695	1354	27
RTOR Reduction (vph)	76	0	0	0	1	0
Lane Group Flow (vph)	222	0	0	2478	1380	0
Turn Type			Perm			
Protected Phases	4			2	6	
Permitted Phases			2			
Actuated Green, G (s)	14.0			102.0	102.0	
Effective Green, g (s)	17.0			105.0	105.0	
Actuated g/C Ratio	0.13			0.81	0.81	
Clearance Time (s)	7.0			7.0	7.0	
Vehicle Extension (s)	2.0			2.0	2.0	
Lane Grp Cap (vph)	217			1423	2850	
v/s Ratio Prot	c0.13				0.39	
v/s Ratio Perm				c1.41		
v/c Ratio	1.02			3.03dl	0.48	
Uniform Delay, d1	56.5			12.5	3.9	
Progression Factor	1.00			1.00	1.00	
Incremental Delay, d2	66.6			336.6	0.0	
Delay (s)	123.1			349.1	4.0	
Level of Service	F			F	A	
Approach Delay (s)	123.1			349.1	4.0	
Approach LOS	F			F	A	

Intersection Summary			
HCM Average Control Delay	218.2	HCM Level of Service	F
HCM Volume to Capacity ratio	1.64		
Actuated Cycle Length (s)	130.0	Sum of lost time (s)	8.0
Intersection Capacity Utilization	129.5%	ICU Level of Service	H
Analysis Period (min)	15		

dl Defacto Left Lane. Recode with 1 though lane as a left lane.
c Critical Lane Group

Movement	EBL	EBR	NBL	NBT	SBT	SBR
Lane Configurations						
Ideal Flow (vphpl)	1900	1900	1900	1900	1900	1900
Total Lost time (s)	4.0			4.0	4.0	
Lane Util. Factor	1.00			0.95	0.95	
Frt	0.90			1.00	1.00	
Flt Protected	0.99			0.98	1.00	
Satd. Flow (prot)	1651			3463	3529	
Flt Permitted	0.99			0.50	1.00	
Satd. Flow (perm)	1651			1778	3529	
Volume (vph)	65	208	744	941	1104	21
Peak-hour factor, PHF	0.95	0.95	0.95	0.95	0.95	0.95
Adj. Flow (vph)	68	219	783	991	1162	22
RTOR Reduction (vph)	90	0	0	0	1	0
Lane Group Flow (vph)	197	0	0	1774	1183	0
Turn Type			Perm			
Protected Phases	4			2	6	
Permitted Phases			2			
Actuated Green, G (s)	14.0			102.0	102.0	
Effective Green, g (s)	17.0			105.0	105.0	
Actuated g/C Ratio	0.13			0.81	0.81	
Clearance Time (s)	7.0			7.0	7.0	
Vehicle Extension (s)	2.0			2.0	2.0	
Lane Grp Cap (vph)	216			1436	2850	
v/s Ratio Prot	c0.12				0.34	
v/s Ratio Perm				c1.00		
v/c Ratio	0.91			2.39dl	0.42	
Uniform Delay, d1	55.8			12.5	3.6	
Progression Factor	1.00			1.00	1.00	
Incremental Delay, d2	37.7			112.1	0.0	
Delay (s)	93.4			124.6	3.7	
Level of Service	F			F	A	
Approach Delay (s)	93.4			124.6	3.7	
Approach LOS	F			F	A	

Intersection Summary			
HCM Average Control Delay	77.7	HCM Level of Service	E
HCM Volume to Capacity ratio	1.19		
Actuated Cycle Length (s)	130.0	Sum of lost time (s)	8.0
Intersection Capacity Utilization	105.2%	ICU Level of Service	G
Analysis Period (min)	15		

dl Defacto Left Lane. Recode with 1 though lane as a left lane.
c Critical Lane Group

Movement	EBL	EBT	WBT	WBR	SWL	SWR
Lane Configurations		↑↑	↑↑			↱↱
Sign Control		Free	Free		Stop	
Grade		0%	0%		0%	
Volume (veh/h)	0	843	1619	0	0	1040
Peak Hour Factor	0.95	0.95	0.95	0.95	0.95	0.95
Hourly flow rate (vph)	0	887	1704	0	0	1095
Pedestrians						
Lane Width (ft)						
Walking Speed (ft/s)						
Percent Blockage						
Right turn flare (veh)						
Median type					None	
Median storage veh)						
Upstream signal (ft)		411				
pX, platoon unblocked					0.96	
vC, conflicting volume	1704				2148	852
vC1, stage 1 conf vol						
vC2, stage 2 conf vol						
vCu, unblocked vol	1704				2155	852
tC, single (s)	4.1				6.8	6.9
tC, 2 stage (s)						
tF (s)	2.2				3.5	3.3
p0 queue free %	100				100	0
cM capacity (veh/h)	369				39	303

Direction, Lane #	EB 1	EB 2	WB 1	WB 2	SW 1	SW 2
Volume Total	444	444	852	852	547	547
Volume Left	0	0	0	0	0	0
Volume Right	0	0	0	0	547	547
cSH	1700	1700	1700	1700	303	303
Volume to Capacity	0.26	0.26	0.50	0.50	1.81	1.81
Queue Length 95th (ft)	0	0	0	0	906	906
Control Delay (s)	0.0	0.0	0.0	0.0	405.0	405.0
Lane LOS					F	F
Approach Delay (s)	0.0		0.0		405.0	
Approach LOS					F	

Intersection Summary			
Average Delay	120.3		
Intersection Capacity Utilization	87.8%	ICU Level of Service	E
Analysis Period (min)	15		

Movement	EBL	EBR	NBL	NBT	SBT	SBR
Lane Configurations	↰↱			↑↑	↑↑	
Sign Control	Stop			Free	Free	
Grade	0%			0%	0%	
Volume (veh/h)	65	207	780	225	918	225
Peak Hour Factor	0.95	0.95	0.95	0.95	0.95	0.95
Hourly flow rate (vph)	68	218	821	237	966	237
Pedestrians						
Lane Width (ft)						
Walking Speed (ft/s)						
Percent Blockage						
Right turn flare (veh)						
Median type	None					
Median storage veh)						
Upstream signal (ft)				506		
pX, platoon unblocked						
vC, conflicting volume	2845	602	1203			
vC1, stage 1 conf vol						
vC2, stage 2 conf vol						
vCu, unblocked vol	2845	602	1203			
tC, single (s)	6.8	6.9	4.1			
tC, 2 stage (s)						
tF (s)	3.5	3.3	2.2			
p0 queue free %	0	51	0			
cM capacity (veh/h)	0	443	576			

Direction, Lane #	EB 1	EB 2	NB 1	NB 2	SB 1	SB 2
Volume Total	46	241	900	158	644	559
Volume Left	46	23	821	0	0	0
Volume Right	0	218	0	0	0	237
cSH	0	0	576	1700	1700	1700
Volume to Capacity	Err	Err	1.43	0.09	0.38	0.33
Queue Length 95th (ft)	Err	Err	966	0	0	0
Control Delay (s)	Err	Err	223.0	0.0	0.0	0.0
Lane LOS	F	F	F			
Approach Delay (s)	Err		189.7		0.0	
Approach LOS	F					

Intersection Summary			
Average Delay	Err		
Intersection Capacity Utilization	94.2%	ICU Level of Service	F
Analysis Period (min)	15		

HCM Signalized Intersection Capacity Analysis
5: Route 7 & Countryside Blvd.

Kincora
Total Future 2025

Movement	EBL	EBT	EBR	WBL	WBT	WBR	NBL	NBT	NBR	SBL	SBT	SBR
Lane Configurations												
Ideal Flow (vphpl)	1900	1900	1900	1900	1900	1900	1900	1900	1900	1900	1900	1900
Total Lost time (s)	3.0	3.0	3.0	3.0	3.0	3.0	3.0	3.0	3.0	3.0	3.0	3.0
Lane Util. Factor	0.97	0.86	1.00	0.97	0.86	1.00	0.97	0.95	1.00	0.97	0.95	1.00
Frt	1.00	1.00	0.85	1.00	1.00	0.85	1.00	1.00	0.85	1.00	1.00	0.85
Flt Protected	0.95	1.00	1.00	0.95	1.00	1.00	0.95	1.00	1.00	0.95	1.00	1.00
Satd. Flow (prot)	3433	6408	1583	3433	6408	1583	3433	3539	1583	3433	3539	1583
Flt Permitted	0.95	1.00	1.00	0.95	1.00	1.00	0.95	1.00	1.00	0.95	1.00	1.00
Satd. Flow (perm)	3433	6408	1583	3433	6408	1583	3433	3539	1583	3433	3539	1583
Volume (vph)	591	3114	175	651	2827	214	286	148	413	186	163	333
Peak-hour factor, PHF	0.95	0.95	0.95	0.95	0.95	0.95	0.95	0.95	0.95	0.95	0.95	0.95
Adj. Flow (vph)	622	3278	184	685	2976	225	301	156	435	196	172	351
RTOR Reduction (vph)	0	0	0	0	0	11	0	0	0	0	0	1
Lane Group Flow (vph)	622	3278	184	685	2976	214	301	156	435	196	172	350
Turn Type	Prot		Free	Prot		pm+ov	Prot		Free	Prot		pm+ov
Protected Phases	1	6		5	2	3	7	4		3	8	1
Permitted Phases			Free			2			Free			8
Actuated Green, G (s)	24.7	68.1	140.0	27.1	70.5	80.2	8.0	7.1	140.0	9.7	8.8	33.5
Effective Green, g (s)	28.7	72.1	140.0	31.1	74.5	38.2	12.0	11.1	140.0	13.7	12.8	41.5
Actuated g/C Ratio	0.20	0.51	1.00	0.22	0.53	0.63	0.09	0.08	1.00	0.10	0.09	0.30
Clearance Time (s)	7.0	7.0		7.0	7.0	7.0	7.0	7.0		7.0	7.0	7.0
Vehicle Extension (s)	2.0	2.0		3.0	2.0	2.0	2.0	2.0		2.0	2.0	2.0
Lane Grp Cap (vph)	704	3300	1583	763	3410	1031	294	281	1583	336	324	503
v/s Ratio Prot	0.18	c0.51		c0.20	0.46	0.02	c0.09	0.04		0.06	0.05	c0.14
v/s Ratio Perm			0.12			0.11			c0.27			0.08
v/c Ratio	0.88	0.99	0.12	0.90	0.87	0.21	1.02	0.56	0.27	0.58	0.53	0.70
Uniform Delay, d1	54.0	33.7	0.0	52.9	28.6	11.0	64.0	62.1	0.0	60.4	60.7	43.7
Progression Factor	1.00	1.00	1.00	1.00	1.00	1.00	1.00	1.00	1.00	1.00	1.00	1.00
Incremental Delay, d2	12.3	14.2	0.1	13.3	3.4	0.0	58.7	1.3	0.4	1.7	0.8	3.4
Delay (s)	66.3	47.9	0.1	66.2	32.0	11.1	122.7	63.4	0.4	62.1	61.6	47.0
Level of Service	E	D	A	E	C	B	F	E	A	E	E	D
Approach Delay (s)		48.6			36.8			52.7			54.6	
Approach LOS		D			D			D			D	

Intersection Summary			
HCM Average Control Delay	44.6	HCM Level of Service	D
HCM Volume to Capacity ratio	0.92		
Actuated Cycle Length (s)	140.0	Sum of lost time (s)	9.0
Intersection Capacity Utilization	90.2%	ICU Level of Service	E
Analysis Period (min)	15		

c Critical Lane Group

HCM Signalized Intersection Capacity Analysis
6: Route 7 & Palisade Parkway

Kincora
Total Future 2025

Movement	EBL	EBT	EBR	WBL	WBT	WBR	NBL	NBT	NBR	SBL	SBT	SBR
Lane Configurations												
Ideal Flow (vphpl)	1900	1900	1900	1900	1900	1900	1900	1900	1900	1900	1900	1900
Total Lost time (s)	3.0	3.0	3.0	3.0	3.0	3.0	3.0	3.0	3.0	3.0	3.0	3.0
Lane Util. Factor	0.97	0.86	1.00	1.00	0.86	1.00	0.97	1.00	1.00	0.97	1.00	1.00
Frt	1.00	1.00	0.85	1.00	1.00	0.85	1.00	1.00	0.85	1.00	1.00	0.85
Flt Protected	0.95	1.00	1.00	0.95	1.00	1.00	0.95	1.00	1.00	0.95	1.00	1.00
Satd. Flow (prot)	3433	6408	1583	1770	6408	1583	3433	1863	1583	3433	1863	1583
Flt Permitted	0.95	1.00	1.00	0.95	1.00	1.00	0.95	1.00	1.00	0.95	1.00	1.00
Satd. Flow (perm)	3433	6408	1583	1770	6408	1583	3433	1863	1583	3433	1863	1583
Volume (vph)	263	3295	25	74	3030	161	391	97	234	225	77	234
Peak-hour factor, PHF	0.95	0.95	0.95	0.95	0.95	0.95	0.95	0.95	0.95	0.95	0.95	0.95
Adj. Flow (vph)	277	3468	26	78	3189	169	412	102	246	237	81	246
RTOR Reduction (vph)	0	0	0	0	0	0	0	0	8	0	0	4
Lane Group Flow (vph)	277	3468	26	78	3189	169	412	102	238	237	81	242
Turn Type	Prot		Free	Prot		Free	Prot		pm+ov	Prot		pm+ov
Protected Phases	1	6		5	2		7	4	5	3	8	1
Permitted Phases			Free			Free			4			8
Actuated Green, G (s)	11.5	63.0	120.0	8.1	59.6	120.0	16.9	10.9	19.0	10.0	4.0	15.5
Effective Green, g (s)	15.5	67.0	120.0	12.1	63.6	120.0	20.9	14.9	27.0	14.0	8.0	23.5
Actuated g/C Ratio	0.13	0.56	1.00	0.10	0.53	1.00	0.17	0.12	0.22	0.12	0.07	0.20
Clearance Time (s)	7.0	7.0		7.0	7.0		7.0	7.0	7.0	7.0	7.0	7.0
Vehicle Extension (s)	2.0	4.0		2.0	4.0		3.0	3.0	2.0	3.0	3.0	2.0
Lane Grp Cap (vph)	443	3578	1583	178	3396	1583	598	231	396	401	124	350
v/s Ratio Prot	0.08	c0.54		0.04	0.50		c0.12	0.05	c0.06	0.07	0.04	c0.09
v/s Ratio Perm			0.02			0.11			0.09			0.06
v/c Ratio	0.63	0.97	0.02	0.44	0.94	0.11	0.69	0.44	0.60	0.59	0.65	0.69
Uniform Delay, d1	49.5	25.5	0.0	50.8	26.4	0.0	46.5	48.7	41.7	50.3	54.6	44.9
Progression Factor	1.00	1.00	1.00	1.00	1.00	1.00	1.00	1.00	1.00	1.00	1.00	1.00
Incremental Delay, d2	2.0	9.4	0.0	0.6	6.6	0.1	3.3	1.3	1.8	2.3	11.7	4.7
Delay (s)	51.5	34.9	0.0	51.4	33.0	0.1	49.8	50.0	43.4	52.6	66.3	49.6
Level of Service	D	C	A	D	C	A	D	D	D	D	E	D
Approach Delay (s)		35.9			31.8			47.8			53.3	
Approach LOS		D			C			D			D	

Intersection Summary			
HCM Average Control Delay	36.5	HCM Level of Service	D
HCM Volume to Capacity ratio	0.83		
Actuated Cycle Length (s)	120.0	Sum of lost time (s)	3.0
Intersection Capacity Utilization	79.7%	ICU Level of Service	D
Analysis Period (min)	15		

c Critical Lane Group

Movement	WBL	WBR	NBT	NBR	SBL	SBT
Lane Configurations						
Ideal Flow (vphpl)	1900	1900	1900	1900	1900	1900
Total Lost time (s)	3.0	3.0	3.0		3.0	3.0
Lane Util. Factor	1.00	1.00	0.95		1.00	0.95
Frt	1.00	0.85	0.98		1.00	1.00
Flt Protected	0.95	1.00	1.00		0.95	1.00
Satd. Flow (prot)	1770	1583	3466		1770	3539
Flt Permitted	0.95	1.00	1.00		0.19	1.00
Satd. Flow (perm)	1770	1583	3466		346	3539
Volume (vph)	112	262	733	117	250	603
Peak-hour factor, PHF	0.95	0.95	0.95	0.95	0.95	0.95
Adj. Flow (vph)	118	276	772	123	263	635
RTOR Reduction (vph)	0	80	11	0	0	0
Lane Group Flow (vph)	118	196	884	0	263	635
Turn Type		pm+ov			pm+pt	
Protected Phases	4	1	2		1	6
Permitted Phases		4			6	
Actuated Green, G (s)	7.0	15.8	20.4		36.2	36.2
Effective Green, g (s)	11.0	23.8	24.9		40.7	40.7
Actuated g/C Ratio	0.19	0.41	0.43		0.71	0.71
Clearance Time (s)	7.0	7.0	7.5		7.0	7.5
Vehicle Extension (s)	2.0	2.0	2.0		2.0	2.0
Lane Grp Cap (vph)	337	735	1496		560	2496
v/s Ratio Prot	c0.07	0.06	c0.26		c0.10	0.18
v/s Ratio Perm		0.06			0.23	
v/c Ratio	0.35	0.27	0.59		0.47	0.25
Uniform Delay, d1	20.3	11.2	12.5		5.0	3.1
Progression Factor	1.00	1.00	1.00		1.00	1.00
Incremental Delay, d2	0.2	0.1	0.4		0.2	0.0
Delay (s)	20.5	11.3	12.9		5.3	3.1
Level of Service	C	B	B		A	A
Approach Delay (s)	14.0		12.9			3.7
Approach LOS	B		B			A

Intersection Summary			
HCM Average Control Delay	9.3	HCM Level of Service	A
HCM Volume to Capacity ratio	0.51		
Actuated Cycle Length (s)	57.7	Sum of lost time (s)	9.0
Intersection Capacity Utilization	54.0%	ICU Level of Service	A
Analysis Period (min)	15		

c Critical Lane Group

Movement	EBL	EBT	EBR	WBL	WBT	WBR	NBL	NBT	NBR	SBL	SBT	SBR
Lane Configurations												
Ideal Flow (vphpl)	1900	1900	1900	1900	1900	1900	1900	1900	1900	1900	1900	1900
Total Lost time (s)		4.0	4.0		4.0	4.0	4.0	4.0	4.0	4.0	4.0	4.0
Lane Util. Factor		1.00	1.00		1.00	1.00	1.00	0.95	1.00	1.00	0.95	1.00
Frt		1.00	0.85		1.00	0.85	1.00	1.00	0.85	1.00	1.00	0.85
Flt Protected		0.96	1.00		0.95	1.00	0.95	1.00	1.00	0.95	1.00	1.00
Satd. Flow (prot)		1779	1583		1770	1583	1770	3539	1583	1770	3539	1583
Flt Permitted		0.71	1.00		0.74	1.00	0.37	1.00	1.00	0.30	1.00	1.00
Satd. Flow (perm)		1323	1583		1370	1583	694	3539	1583	556	3539	1583
Volume (vph)	29	2	82	37	0	30	148	871	83	29	608	72
Peak-hour factor, PHF	0.95	0.95	0.95	0.95	0.95	0.95	0.95	0.95	0.95	0.95	0.95	0.95
Adj. Flow (vph)	31	2	86	39	0	32	156	917	87	31	640	76
RTOR Reduction (vph)	0	0	70	0	0	27	0	0	25	0	0	24
Lane Group Flow (vph)	0	33	16	0	39	5	156	917	62	31	640	52
Turn Type	Perm		pm+ov	Perm		pm+ov	pm+pt		Perm	pm+pt		Perm
Protected Phases		4	5		8	1	5	2		1	6	
Permitted Phases	4		4	8		8	2		2	6		6
Actuated Green, G (s)		4.9	10.9		4.9	7.9	67.1	61.1	61.1	61.1	58.1	58.1
Effective Green, g (s)		7.9	16.9		7.9	13.9	73.1	64.1	64.1	67.1	61.1	61.1
Actuated g/C Ratio		0.09	0.19		0.09	0.15	0.81	0.71	0.71	0.75	0.68	0.68
Clearance Time (s)		7.0	7.0		7.0	7.0	7.0	7.0	7.0	7.0	7.0	7.0
Vehicle Extension (s)		2.0	2.0		2.0	2.0	2.0	2.0	2.0	2.0	2.0	2.0
Lane Grp Cap (vph)		116	368		120	315	671	2521	1127	495	2403	1075
v/s Ratio Prot			0.00			0.00	c0.02	c0.26		0.00	0.18	
v/s Ratio Perm		0.02	0.01		c0.03	0.00	0.17		0.04	0.04		0.03
v/c Ratio		0.28	0.04		0.33	0.02	0.23	0.36	0.05	0.06	0.27	0.05
Uniform Delay, d1		38.4	29.9		38.5	32.3	2.0	5.0	3.9	3.0	5.7	4.8
Progression Factor		1.00	1.00		1.00	1.00	1.00	1.00	1.00	1.00	1.00	1.00
Incremental Delay, d2		0.5	0.0		0.6	0.0	0.1	0.4	0.1	0.0	0.3	0.1
Delay (s)		38.9	30.0		39.1	32.3	2.0	5.4	4.0	3.0	5.9	4.9
Level of Service		D	C		D	C	A	A	A	A	A	A
Approach Delay (s)		32.4			36.0			4.9			5.7	
Approach LOS		C			D			A			A	

Intersection Summary			
HCM Average Control Delay	7.8	HCM Level of Service	A
HCM Volume to Capacity ratio	0.36		
Actuated Cycle Length (s)	90.0	Sum of lost time (s)	12.0
Intersection Capacity Utilization	46.1%	ICU Level of Service	A
Analysis Period (min)	15		

c Critical Lane Group

Movement	EBL	EBT	EBR	WBL	WBT	WBR	NBL	NBT	NBR	SBL	SBT	SBR
Lane Configurations												
Ideal Flow (vphpl)	1900	1900	1900	1900	1900	1900	1900	1900	1900	1900	1900	1900
Total Lost time (s)	3.0	3.0	3.0	3.0	3.0	3.0	3.0	3.0	3.0	3.0	3.0	3.0
Lane Util. Factor	1.00	0.95	1.00	0.97	0.95	1.00	0.97	0.95	1.00	0.97	0.95	1.00
Frt	1.00	1.00	0.85	1.00	1.00	0.85	1.00	1.00	0.85	1.00	1.00	0.85
Flt Protected	0.95	1.00	1.00	0.95	1.00	1.00	0.95	1.00	1.00	0.95	1.00	1.00
Satd. Flow (prot)	1770	3539	1583	3433	3539	1583	3433	3539	1583	3433	3539	1583
Flt Permitted	0.95	1.00	1.00	0.95	1.00	1.00	0.95	1.00	1.00	0.95	1.00	1.00
Satd. Flow (perm)	1770	3539	1583	3433	3539	1583	3433	3539	1583	3433	3539	1583
Volume (vph)	290	454	220	191	704	306	334	949	146	164	1002	501
Peak-hour factor, PHF	0.95	0.95	0.95	0.95	0.95	0.95	0.95	0.95	0.95	0.95	0.95	0.95
Adj. Flow (vph)	305	478	232	201	741	322	352	999	154	173	1055	527
RTOR Reduction (vph)	0	0	0	0	0	0	0	0	0	0	0	0
Lane Group Flow (vph)	305	478	232	201	741	322	352	999	154	173	1055	527
Turn Type	Prot		Free	Prot		Free	Prot		Free	Prot		Free
Protected Phases	7	4		3	8		5	2		1	6	
Permitted Phases			Free			Free			Free			Free
Actuated Green, G (s)	20.1	33.3	147.8	13.9	27.1	147.8	18.3	59.9	147.8	12.7	54.3	147.8
Effective Green, g (s)	24.1	37.3	147.8	17.9	31.1	147.8	22.3	63.9	147.8	16.7	58.3	147.8
Actuated g/C Ratio	0.16	0.25	1.00	0.12	0.21	1.00	0.15	0.43	1.00	0.11	0.39	1.00
Clearance Time (s)	7.0	7.0		7.0	7.0		7.0	7.0		7.0	7.0	
Vehicle Extension (s)	3.0	3.0		3.0	3.0		3.0	5.0		3.0	5.0	
Lane Grp Cap (vph)	289	893	1583	416	745	1583	518	1530	1583	388	1396	1583
v/s Ratio Prot	c0.17	0.14		0.06	c0.21		c0.10	0.28		0.05	c0.30	
v/s Ratio Perm			0.15			0.20			0.10			0.33
v/c Ratio	1.06	0.54	0.15	0.48	0.99	0.20	0.68	0.65	0.10	0.45	0.76	0.33
Uniform Delay, d1	61.9	47.8	0.0	60.6	58.3	0.0	59.4	33.2	0.0	61.2	38.6	0.0
Progression Factor	1.00	1.00	1.00	1.00	1.00	1.00	1.00	1.00	1.00	1.00	1.00	1.00
Incremental Delay, d2	68.3	0.6	0.2	0.9	31.4	0.3	3.5	1.4	0.1	0.8	2.8	0.6
Delay (s)	130.1	48.4	0.2	61.5	89.7	0.3	62.9	34.5	0.1	62.0	41.4	0.6
Level of Service	F	D	A	E	F	A	E	C	A	E	D	A
Approach Delay (s)		61.9			62.4			37.7			31.2	
Approach LOS		E			E			D			C	

Intersection Summary			
HCM Average Control Delay	45.7	HCM Level of Service	D
HCM Volume to Capacity ratio	0.85		
Actuated Cycle Length (s)	147.8	Sum of lost time (s)	12.0
Intersection Capacity Utilization	86.1%	ICU Level of Service	E
Analysis Period (min)	15		

c Critical Lane Group

Movement	EBL	EBT	EBR	WBL	WBT	WBR	NBL	NBT	NBR	SBL	SBT	SBR
Lane Configurations												
Ideal Flow (vphpl)	1900	1900	1900	1900	1900	1900	1900	1900	1900	1900	1900	1900
Total Lost time (s)	4.0	4.0		4.0	4.0		4.0	4.0		4.0	4.0	
Lane Util. Factor	1.00	0.95		1.00	0.95		1.00	0.95		1.00	0.95	
Frt	1.00	0.98		1.00	1.00		1.00	0.99		1.00	0.99	
Flt Protected	0.95	1.00		0.95	1.00		0.95	1.00		0.95	1.00	
Satd. Flow (prot)	1770	3468		1770	3522		1770	3504		1770	3513	
Flt Permitted	0.95	1.00		0.95	1.00		0.95	1.00		0.06	1.00	
Satd. Flow (perm)	1770	3468		1770	3522		1770	3504		119	3513	
Volume (vph)	153	349	54	16	472	16	57	1709	121	843	1797	94
Peak-hour factor, PHF	0.95	0.95	0.95	0.95	0.95	0.95	0.95	0.95	0.95	0.95	0.95	0.95
Adj. Flow (vph)	161	367	57	17	497	17	60	1799	127	887	1892	99
RTOR Reduction (vph)	0	10	0	0	2	0	0	5	0	0	3	0
Lane Group Flow (vph)	161	414	0	17	512	0	60	1921	0	887	1988	0
Turn Type	Prot			Prot			Prot			Perm		
Protected Phases	7	4		3	8		5	2			6	
Permitted Phases										6		
Actuated Green, G (s)	4.0	17.8		1.6	15.4		6.5	81.7		68.2	68.2	
Effective Green, g (s)	7.0	20.8		4.6	18.4		9.5	84.7		71.2	71.2	
Actuated g/C Ratio	0.06	0.17		0.04	0.15		0.08	0.69		0.58	0.58	
Clearance Time (s)	7.0	7.0		7.0	7.0		7.0	7.0		7.0	7.0	
Vehicle Extension (s)	4.0	4.0		2.0	2.0		2.0	3.0		3.0	3.0	
Lane Grp Cap (vph)	101	591		67	531		138	2431		69	2049	
v/s Ratio Prot	c0.09	0.12		0.01	c0.15		0.03	c0.55			0.57	
v/s Ratio Perm										c7.47		
v/c Ratio	1.59	0.70		0.25	0.96		0.43	0.79		12.86	0.97	
Uniform Delay, d1	57.5	47.7		57.1	51.5		53.7	12.7		25.4	24.4	
Progression Factor	1.00	1.00		1.00	1.00		1.00	1.00		1.00	1.00	
Incremental Delay, d2	308.7	4.0		0.7	29.9		0.8	1.8		5362.9	13.5	
Delay (s)	366.3	51.7		57.8	81.4		54.5	14.5		5388.4	38.0	
Level of Service	F	D		E	F		D	B		F	D	
Approach Delay (s)		138.3			80.6			15.7			1687.0	
Approach LOS		F			F			B			F	

Intersection Summary			
HCM Average Control Delay	837.8	HCM Level of Service	F
HCM Volume to Capacity ratio	8.92		
Actuated Cycle Length (s)	122.1	Sum of lost time (s)	16.0
Intersection Capacity Utilization	133.2%	ICU Level of Service	H
Analysis Period (min)	15		

c Critical Lane Group

Movement	EBL	EBT	EBR	WBL	WBT	WBR	NBL	NBT	NBR	SBL	SBT	SBR
Lane Configurations												
Ideal Flow (vphpl)	1900	1900	1900	1900	1900	1900	1900	1900	1900	1900	1900	1900
Total Lost time (s)	4.0	4.0	4.0	3.0	4.0	3.0	4.0	3.0	3.0	3.0	3.0	4.0
Lane Util. Factor	0.97	0.95	1.00	0.97	0.95	1.00	0.97	0.95	1.00	0.97	0.95	1.00
Frt	1.00	1.00	0.85	1.00	1.00	0.85	1.00	1.00	0.85	1.00	1.00	0.85
Flt Protected	0.95	1.00	1.00	0.95	1.00	1.00	0.95	1.00	1.00	0.95	1.00	1.00
Satd. Flow (prot)	3433	3539	1583	3433	3539	1583	3433	3539	1583	3433	3539	1583
Flt Permitted	0.95	1.00	1.00	0.95	1.00	1.00	0.95	1.00	1.00	0.95	1.00	1.00
Satd. Flow (perm)	3433	3539	1583	3433	3539	1583	3433	3539	1583	3433	3539	1583
Volume (vph)	458	792	433	223	649	93	1129	346	287	83	206	602
Peak-hour factor, PHF	0.95	0.95	0.95	0.95	0.95	0.95	0.95	0.95	0.95	0.95	0.95	0.95
Adj. Flow (vph)	482	834	456	235	683	98	1188	364	302	87	217	634
RTOR Reduction (vph)	0	0	0	0	0	0	0	0	33	0	0	0
Lane Group Flow (vph)	482	834	456	235	683	98	1188	364	269	87	217	634
Turn Type	Prot		Free	Prot		Free	Prot		pm+ov	Prot		Free
Protected Phases	1	6		5	2		7	4	5	3	8	
Permitted Phases			Free			Free			4			Free
Actuated Green, G (s)	11.5	21.0	100.0	8.1	17.6	100.0	36.0	39.4	47.5	4.0	7.4	100.0
Effective Green, g (s)	14.5	24.0	100.0	12.1	20.6	100.0	39.0	42.9	55.0	8.0	10.9	100.0
Actuated g/C Ratio	0.14	0.24	1.00	0.12	0.21	1.00	0.39	0.43	0.55	0.08	0.11	1.00
Clearance Time (s)	7.0	7.0		7.0	7.0		7.0	6.5	7.0	7.0	6.5	
Vehicle Extension (s)	2.5	4.0		2.5	4.0		2.5	2.5	2.5	2.5	2.5	
Lane Grp Cap (vph)	498	849	1583	415	729	1583	1339	1518	918	275	386	1583
v/s Ratio Prot	c0.14	c0.24		0.07	0.19		c0.35	0.10	0.04	0.03	c0.06	
v/s Ratio Perm			0.29			0.06			0.13			c0.40
v/c Ratio	0.97	0.98	0.29	0.57	0.94	0.06	0.89	0.24	0.29	0.32	0.56	0.40
Uniform Delay, d1	42.5	37.8	0.0	41.5	39.1	0.0	28.4	18.2	12.1	43.4	42.3	0.0
Progression Factor	1.00	1.00	1.00	1.00	1.00	1.00	1.00	1.00	1.00	1.00	1.00	1.00
Incremental Delay, d2	31.8	26.9	0.5	1.4	21.1	0.1	7.4	0.1	0.1	0.5	1.5	0.8
Delay (s)	74.4	64.7	0.5	42.9	60.1	0.1	35.9	18.2	12.2	43.9	43.8	0.8
Level of Service	E	E	A	D	E	A	D	B	B	D	D	A
Approach Delay (s)		50.8			50.3			28.5			14.7	
Approach LOS		D			D			C			B	

Intersection Summary			
HCM Average Control Delay	37.3	HCM Level of Service	D
HCM Volume to Capacity ratio	0.86		
Actuated Cycle Length (s)	100.0	Sum of lost time (s)	11.0
Intersection Capacity Utilization	82.2%	ICU Level of Service	E
Analysis Period (min)	15		
c Critical Lane Group			

Movement	EBL	EBT	EBR	WBL	WBT	WBR	NBL	NBT	NBR	SBL	SBT	SBR
Lane Configurations												
Ideal Flow (vphpl)	1900	1900	1900	1900	1900	1900	1900	1900	1900	1900	1900	1900
Total Lost time (s)	3.0	3.0	3.0	3.0	3.0	3.0	3.0	3.0	3.0	3.0	3.0	3.0
Lane Util. Factor	0.97	0.95	1.00	0.97	0.95	1.00	0.97	0.95	1.00	1.00	0.95	1.00
Frt	1.00	1.00	0.85	1.00	1.00	0.85	1.00	1.00	0.85	1.00	1.00	0.85
Flt Protected	0.95	1.00	1.00	0.95	1.00	1.00	0.95	1.00	1.00	0.95	1.00	1.00
Satd. Flow (prot)	3433	3539	1583	3433	3539	1583	3433	3539	1583	1770	3539	1583
Flt Permitted	0.95	1.00	1.00	0.95	1.00	1.00	0.95	1.00	1.00	0.95	1.00	1.00
Satd. Flow (perm)	3433	3539	1583	3433	3539	1583	3433	3539	1583	1770	3539	1583
Volume (vph)	329	647	260	238	239	33	244	1406	298	4	1004	258
Peak-hour factor, PHF	0.95	0.95	0.95	0.95	0.95	0.95	0.95	0.95	0.95	0.95	0.95	0.95
Adj. Flow (vph)	346	681	274	251	252	35	257	1480	314	4	1057	272
RTOR Reduction (vph)	0	0	139	0	0	28	0	0	103	0	0	150
Lane Group Flow (vph)	346	681	135	251	252	7	257	1480	211	4	1057	122
Turn Type	Prot		Perm	Prot		Perm	Prot		Perm	Prot		Perm
Protected Phases	7	4		3	8		1	6		5	2	
Permitted Phases			4			8			6			2
Actuated Green, G (s)	15.6	24.9	24.9	10.1	19.4	19.4	11.7	64.1	64.1	1.8	54.2	54.2
Effective Green, g (s)	19.6	29.9	29.9	14.1	24.4	24.4	15.7	68.6	68.6	5.8	58.7	58.7
Actuated g/C Ratio	0.15	0.23	0.23	0.11	0.19	0.19	0.12	0.53	0.53	0.04	0.45	0.45
Clearance Time (s)	7.0	8.0	8.0	7.0	8.0	8.0	7.0	7.5	7.5	7.0	7.5	7.5
Vehicle Extension (s)	3.0	3.0	3.0	3.0	3.0	3.0	3.0	3.0	3.0	3.0	3.0	3.0
Lane Grp Cap (vph)	516	811	363	371	662	296	413	1862	833	79	1593	713
v/s Ratio Prot	c0.10	c0.19		0.07	0.07		c0.07	c0.42		0.00	0.30	
v/s Ratio Perm			0.09			0.00			0.13			0.08
v/c Ratio	0.67	0.84	0.37	0.68	0.38	0.02	0.62	0.79	0.25	0.05	0.66	0.17
Uniform Delay, d1	52.3	48.0	42.3	56.0	46.4	43.3	54.5	25.2	16.9	59.7	28.1	21.4
Progression Factor	1.00	1.00	1.00	1.00	1.00	1.00	1.00	1.00	1.00	1.00	1.00	1.00
Incremental Delay, d2	3.4	7.7	0.6	4.8	0.4	0.0	2.9	2.4	0.2	0.3	1.1	0.1
Delay (s)	55.8	55.6	43.0	60.8	46.8	43.3	57.4	27.6	17.1	59.9	29.2	21.5
Level of Service	E	E	D	E	D	D	E	C	B	E	C	C
Approach Delay (s)		53.0			53.1			29.7			27.7	
Approach LOS		D			D			C			C	

Intersection Summary			
HCM Average Control Delay	37.4	HCM Level of Service	D
HCM Volume to Capacity ratio	0.78		
Actuated Cycle Length (s)	130.4	Sum of lost time (s)	9.0
Intersection Capacity Utilization	86.8%	ICU Level of Service	E
Analysis Period (min)	15		
c Critical Lane Group			

Movement	EBL	EBR	NBL	NBT	SBT	SBR
Lane Configurations						
Ideal Flow (vphpl)	1900	1900	1900	1900	1900	1900
Total Lost time (s)	3.0	3.0	3.0	3.0	3.0	3.0
Lane Util. Factor	1.00	1.00	1.00	0.95	0.95	1.00
Frt	1.00	0.85	1.00	1.00	1.00	0.85
Flt Protected	0.95	1.00	0.95	1.00	1.00	1.00
Satd. Flow (prot)	1770	1583	1770	3539	3539	1583
Flt Permitted	0.95	1.00	0.07	1.00	1.00	1.00
Satd. Flow (perm)	1770	1583	138	3539	3539	1583
Volume (vph)	211	183	249	1742	1322	116
Peak-hour factor, PHF	0.95	0.95	0.95	0.95	0.95	0.95
Adj. Flow (vph)	222	193	262	1834	1392	122
RTOR Reduction (vph)	0	151	0	0	0	35
Lane Group Flow (vph)	222	42	262	1834	1392	87
Turn Type		Perm	pm+pt			pm+ov
Protected Phases	4		1	6	2	4
Permitted Phases		4	6			2
Actuated Green, G (s)	18.2	18.2	70.8	70.8	47.5	65.7
Effective Green, g (s)	22.2	22.2	74.3	74.3	51.0	73.2
Actuated g/C Ratio	0.22	0.22	0.72	0.72	0.50	0.71
Clearance Time (s)	7.0	7.0	7.0	6.5	6.5	7.0
Vehicle Extension (s)	3.0	3.0	4.0	4.0	4.0	3.0
Lane Grp Cap (vph)	383	343	423	2565	1761	1177
v/s Ratio Prot	c0.13		0.12	c0.52	c0.39	0.02
v/s Ratio Perm		0.03	0.33			0.04
v/c Ratio	0.58	0.12	0.62	0.72	0.79	0.07
Uniform Delay, d1	36.0	32.3	25.0	8.1	21.3	4.4
Progression Factor	1.00	1.00	1.00	1.00	1.00	1.00
Incremental Delay, d2	2.1	0.2	3.1	1.0	2.6	0.0
Delay (s)	38.1	32.5	28.1	9.1	24.0	4.4
Level of Service	D	C	C	A	C	A
Approach Delay (s)	35.5			11.5	22.4	
Approach LOS	D			B	C	

Intersection Summary

HCM Average Control Delay	18.1	HCM Level of Service	B
HCM Volume to Capacity ratio	0.73		
Actuated Cycle Length (s)	102.5	Sum of lost time (s)	9.0
Intersection Capacity Utilization	72.0%	ICU Level of Service	C
Analysis Period (min)	15		

c Critical Lane Group

Movement	EBL	EBT	EBR	WBL	WBT	WBR	NBL	NBT	NBR	SBL	SBT	SBR
Lane Configurations												
Ideal Flow (vphpl)	1900	1900	1900	1900	1900	1900	1900	1900	1900	1900	1900	1900
Lane Width	12	12	12	12	12	13	12	12	12	12	12	12
Total Lost time (s)	3.0	3.0	3.0	3.0	3.0	3.0	3.0	3.0	3.0	3.0	3.0	3.0
Lane Util. Factor	0.97	0.91	1.00	0.97	0.86	1.00	0.97	0.95	1.00	0.97	0.95	1.00
Frt	1.00	1.00	0.85	1.00	1.00	0.85	1.00	1.00	0.85	1.00	1.00	0.85
Flt Protected	0.95	1.00	1.00	0.95	1.00	1.00	0.95	1.00	1.00	0.95	1.00	1.00
Satd. Flow (prot)	3433	5085	1583	3433	6408	1636	3433	3539	1583	3433	3539	1583
Flt Permitted	0.95	1.00	1.00	0.95	1.00	1.00	0.95	1.00	1.00	0.95	1.00	1.00
Satd. Flow (perm)	3433	5085	1583	3433	6408	1636	3433	3539	1583	3433	3539	1583
Volume (vph)	251	1160	194	216	2758	1246	127	549	106	858	394	260
Peak-hour factor, PHF	0.95	0.95	0.95	0.95	0.95	0.95	0.95	0.95	0.95	0.95	0.95	0.95
Adj. Flow (vph)	264	1221	204	227	2903	1312	134	578	112	903	415	274
RTOR Reduction (vph)	0	0	0	0	0	0	0	0	5	0	0	3
Lane Group Flow (vph)	264	1221	204	227	2903	1312	134	578	107	903	415	271
Turn Type	Prot		Free	Prot		Free	Prot		pm+ov	Prot		pm+ov
Protected Phases	1	6		5	2		3	8	5	7	4	1
Permitted Phases			Free			Free			8			4
Actuated Green, G (s)	6.8	44.8	130.0	11.5	49.5	130.0	4.0	24.2	35.7	22.0	42.2	49.0
Effective Green, g (s)	10.8	48.8	130.0	15.5	53.5	130.0	8.0	27.7	43.2	26.0	45.7	56.5
Actuated g/C Ratio	0.08	0.38	1.00	0.12	0.41	1.00	0.06	0.21	0.33	0.20	0.35	0.43
Clearance Time (s)	7.0	7.0		7.0	7.0		7.0	6.5	7.0	7.0	6.5	7.0
Vehicle Extension (s)	2.0	3.0		2.0	3.0		2.0	2.0	2.0	2.0	2.0	2.0
Lane Grp Cap (vph)	285	1909	1583	409	2637	1636	211	754	563	687	1244	725
v/s Ratio Prot	0.08	0.24		0.07	c0.45		0.04	0.16	0.02	c0.26	0.12	0.03
v/s Ratio Perm			0.13			c0.80			0.05			0.14
v/c Ratio	0.93	0.64	0.13	0.56	1.10	0.80	0.64	0.77	0.19	1.31	0.33	0.37
Uniform Delay, d1	59.2	33.4	0.0	54.0	38.2	0.0	59.6	48.1	30.9	52.0	31.0	24.8
Progression Factor	1.00	1.00	1.00	1.00	1.00	1.00	1.00	1.00	1.00	1.00	1.00	1.00
Incremental Delay, d2	33.7	1.7	0.2	0.9	51.9	4.3	4.5	4.2	0.1	151.7	0.1	0.1
Delay (s)	92.9	35.0	0.2	54.9	90.2	4.3	64.1	52.3	31.0	203.7	31.0	24.9
Level of Service	F	D	A	D	F	A	E	D	C	F	C	C
Approach Delay (s)		39.9			63.0			51.3			127.9	
Approach LOS		D			E			D			F	

Intersection Summary

HCM Average Control Delay	69.4	HCM Level of Service	E
HCM Volume to Capacity ratio	1.02		
Actuated Cycle Length (s)	130.0	Sum of lost time (s)	3.0
Intersection Capacity Utilization	100.1%	ICU Level of Service	G
Analysis Period (min)	15		

c Critical Lane Group

Movement	EBL	EBT	EBR	WBL	WBT	WBR	NBL	NBT	NBR	SBL	SBT	SBR
Lane Configurations												
Ideal Flow (vphpl)	1900	1900	1900	1900	1900	1900	1900	1900	1900	1900	1900	1900
Total Lost time (s)	3.0	3.0	3.0	3.0	3.0	3.0	3.0	3.0	3.0	3.0	3.0	3.0
Lane Util. Factor	1.00	0.86	1.00	1.00	0.86	1.00	1.00	0.95	1.00	1.00	0.95	1.00
Frt	1.00	1.00	0.85	1.00	1.00	0.85	1.00	1.00	0.85	1.00	1.00	0.85
Flt Protected	0.95	1.00	1.00	0.95	1.00	1.00	0.95	1.00	1.00	0.95	1.00	1.00
Satd. Flow (prot)	1770	6408	1583	1770	6408	1583	1770	3539	1583	1770	3539	1583
Flt Permitted	0.95	1.00	1.00	0.95	1.00	1.00	0.71	1.00	1.00	0.53	1.00	1.00
Satd. Flow (perm)	1770	6408	1583	1770	6408	1583	1323	3539	1583	983	3539	1583
Volume (vph)	27	2060	110	581	3663	159	147	33	484	272	65	147
Peak-hour factor, PHF	0.95	0.95	0.95	0.95	0.95	0.95	0.95	0.95	0.95	0.95	0.95	0.95
Adj. Flow (vph)	28	2168	116	612	3856	167	155	35	509	286	68	155
RTOR Reduction (vph)	0	0	68	0	0	42	0	0	0	0	0	122
Lane Group Flow (vph)	28	2168	48	612	3856	125	155	35	509	286	68	33
Turn Type	Prot		pm+ov	Prot		pm+ov	pm+pt		Free	pm+pt		Perm
Protected Phases	1	6	3	5	2	7	3	8		7	4	
Permitted Phases			6			2	8		Free	4		4
Actuated Green, G (s)	4.2	32.4	38.4	35.0	63.2	74.6	10.2	4.2	110.0	21.0	9.6	9.6
Effective Green, g (s)	8.2	35.9	45.9	39.0	66.7	82.1	17.7	7.7	110.0	26.1	13.1	13.1
Actuated g/C Ratio	0.07	0.33	0.42	0.35	0.61	0.75	0.16	0.07	1.00	0.24	0.12	0.12
Clearance Time (s)	7.0	6.5	7.0	7.0	6.5	7.0	7.0	6.5		7.0	6.5	6.5
Vehicle Extension (s)	2.0	3.0	2.0	2.0	3.0	2.0	2.0	2.0		2.0	2.0	2.0
Lane Grp Cap (vph)	132	2091	704	628	3886	1225	254	248	1583	343	421	189
v/s Ratio Prot	0.02	0.34	0.01	c0.35	c0.60	0.01	0.06	0.01		c0.12	0.02	
v/s Ratio Perm			0.02			0.06	0.04		0.32	c0.08		0.02
v/c Ratio	0.21	1.04	0.07	0.97	0.99	0.10	0.61	0.14	0.32	0.83	0.16	0.18
Uniform Delay, d1	47.9	37.0	19.2	35.0	21.4	3.8	42.4	48.0	0.0	38.4	43.5	43.6
Progression Factor	1.00	1.00	1.00	1.00	1.00	1.00	1.00	1.00	1.00	1.00	1.00	1.00
Incremental Delay, d2	0.3	30.0	0.0	29.2	12.7	0.0	3.0	0.1	0.5	15.2	0.8	2.0
Delay (s)	48.2	67.0	19.2	64.2	34.1	3.8	45.5	48.1	0.5	53.5	44.3	45.6
Level of Service	D	E	B	E	C	A	D	D	A	D	D	D
Approach Delay (s)		64.4			37.0			12.9			49.9	
Approach LOS		E			D			B			D	

Intersection Summary			
HCM Average Control Delay	43.5	HCM Level of Service	D
HCM Volume to Capacity ratio	0.94		
Actuated Cycle Length (s)	110.0	Sum of lost time (s)	6.0
Intersection Capacity Utilization	93.8%	ICU Level of Service	F
Analysis Period (min)	15		
c Critical Lane Group			

Movement	EBL	EBT	EBR	WBL	WBT	WBR	NBL	NBT	NBR	SBL	SBT	SBR
Lane Configurations												
Ideal Flow (vphpl)	1900	1900	1900	1900	1900	1900	1900	1900	1900	1900	1900	1900
Total Lost time (s)	3.0	3.0	3.0	3.0	3.0	3.0	3.0	3.0	3.0	3.0	3.0	3.0
Lane Util. Factor	0.94	0.86	1.00	0.97	0.86	1.00	0.97	0.95	1.00	0.97	0.95	1.00
Frt	1.00	1.00	0.85	1.00	1.00	0.85	1.00	1.00	0.85	1.00	1.00	0.85
Flt Protected	0.95	1.00	1.00	0.95	1.00	1.00	0.95	1.00	1.00	0.95	1.00	1.00
Satd. Flow (prot)	4990	6408	1583	3433	6408	1583	3433	3539	1583	3433	3539	1583
Flt Permitted	0.95	1.00	1.00	0.95	1.00	1.00	0.95	1.00	1.00	0.95	1.00	1.00
Satd. Flow (perm)	4990	6408	1583	3433	6408	1583	3433	3539	1583	3433	3539	1583
Volume (vph)	760	2580	321	102	4553	358	440	152	675	449	269	1768
Peak-hour factor, PHF	0.95	0.95	0.95	0.95	0.95	0.95	0.95	0.95	0.95	0.95	0.95	0.95
Adj. Flow (vph)	800	2716	338	107	4793	377	463	160	711	473	283	1861
RTOR Reduction (vph)	0	0	0	0	0	0	0	0	0	0	0	0
Lane Group Flow (vph)	800	2716	338	107	4793	377	463	160	711	473	283	1861
Turn Type	Prot		Free	Prot		Free	Prot		Free	Prot		Free
Protected Phases	1	6		5	2		7	4		3	8	
Permitted Phases			Free			Free			Free			Free
Actuated Green, G (s)	14.0	90.4	145.0	7.6	84.0	145.0	11.0	6.0	145.0	13.0	8.0	145.0
Effective Green, g (s)	18.0	94.4	145.0	11.6	88.0	145.0	15.0	10.0	145.0	17.0	12.0	145.0
Actuated g/C Ratio	0.12	0.65	1.00	0.08	0.61	1.00	0.10	0.07	1.00	0.12	0.08	1.00
Clearance Time (s)	7.0	7.0		7.0	7.0		7.0	7.0		7.0	7.0	
Vehicle Extension (s)	2.0	3.0		2.0	3.0		3.0	3.0		3.0	3.0	
Lane Grp Cap (vph)	619	4172	1583	275	3889	1583	355	244	1583	402	293	1583
v/s Ratio Prot	c0.16	0.42		0.03	c0.75		0.13	0.05		0.14	0.08	
v/s Ratio Perm			0.21			0.24			0.45			c1.18
v/c Ratio	1.29	0.65	0.21	0.39	1.23	0.24	1.30	0.66	0.45	1.18	0.97	1.18
Uniform Delay, d1	63.5	15.3	0.0	63.3	28.5	0.0	65.0	65.8	0.0	64.0	66.3	72.5
Progression Factor	1.00	1.00	1.00	1.00	1.00	1.00	1.00	1.00	1.00	1.00	1.00	1.00
Incremental Delay, d2	143.4	0.8	0.3	0.3	107.0	0.4	156.0	6.2	0.9	102.6	42.9	86.0
Delay (s)	206.9	16.1	0.3	63.7	135.5	0.4	221.0	72.0	0.9	166.6	109.2	158.5
Level of Service	F	B	A	E	F	A	F	E	A	F	F	F
Approach Delay (s)		54.3			124.4			85.8			154.6	
Approach LOS		D			F			F			F	

Intersection Summary			
HCM Average Control Delay	105.9	HCM Level of Service	F
HCM Volume to Capacity ratio	1.21		
Actuated Cycle Length (s)	145.0	Sum of lost time (s)	3.0
Intersection Capacity Utilization	113.8%	ICU Level of Service	H
Analysis Period (min)	15		
c Critical Lane Group			

Movement	EBL	EBT	EBR	WBL	WBT	WBR	NBL	NBT	NBR	SBL	SBT	SBR
Lane Configurations												
Ideal Flow (vphpl)	1900	1900	1900	1900	1900	1900	1900	1900	1900	1900	1900	1900
Total Lost time (s)	3.0	3.0		3.0	3.0			3.0	3.0		3.0	
Lane Util. Factor	1.00	0.95		1.00	0.95			1.00	1.00		1.00	
Frt	1.00	0.99		1.00	1.00			1.00	0.85		0.94	
Flt Protected	0.95	1.00		0.95	1.00			0.95	1.00		0.98	
Satd. Flow (prot)	1770	3507		1770	3539			1775	1583		1724	
Flt Permitted	0.22	1.00		0.05	1.00			0.72	1.00		0.89	
Satd. Flow (perm)	411	3507		86	3539			1334	1583		1558	
Volume (vph)	25	1967	125	165	1198	0	180	2	262	7	3	7
Peak-hour factor, PHF	0.95	0.95	0.95	0.95	0.95	0.95	0.95	0.95	0.95	0.95	0.95	0.95
Adj. Flow (vph)	26	2071	132	174	1261	0	189	2	276	7	3	7
RTOR Reduction (vph)	0	3	0	0	0	0	0	0	0	0	6	0
Lane Group Flow (vph)	26	2200	0	174	1261	0	0	191	276	0	11	0
Turn Type	Perm			pm+pt			Perm		pm+ov	Perm		
Protected Phases		6		5	2			4	5		8	
Permitted Phases	6			2			4		4	8		
Actuated Green, G (s)	80.9	80.9		94.9	94.9			20.0	28.5		20.0	
Effective Green, g (s)	83.9	83.9		97.9	97.9			23.0	34.0		23.0	
Actuated g/C Ratio	0.66	0.66		0.77	0.77			0.18	0.27		0.18	
Clearance Time (s)	6.0	6.0		5.5	5.0			6.0	5.5		6.0	
Vehicle Extension (s)	4.0	4.0		2.0	4.0			3.0	2.0		3.0	
Lane Grp Cap (vph)	272	2319		212	2730			242	462		282	
v/s Ratio Prot		c0.63		c0.07	0.36				0.05			
v/s Ratio Perm	0.06			0.56				c0.14	0.12		0.01	
v/c Ratio	0.10	0.95		0.82	0.46			0.79	0.60		0.04	
Uniform Delay, d1	7.8	19.5		43.9	5.1			49.6	40.5		42.8	
Progression Factor	1.00	1.00		1.00	1.00			1.00	1.00		1.00	
Incremental Delay, d2	0.2	9.3		20.9	0.2			15.6	1.4		0.1	
Delay (s)	8.0	28.9		64.8	5.3			65.2	41.9		42.9	
Level of Service	A	C		E	A			E	D		D	
Approach Delay (s)		28.6			12.5			51.4			42.9	
Approach LOS		C			B			D			D	

Intersection Summary			
HCM Average Control Delay	25.7	HCM Level of Service	C
HCM Volume to Capacity ratio	0.91		
Actuated Cycle Length (s)	126.9	Sum of lost time (s)	9.0
Intersection Capacity Utilization	94.2%	ICU Level of Service	F
Analysis Period (min)	15		
c Critical Lane Group			

Movement	EBL	EBT	WBT	WBR	SBL	SBR
Lane Configurations						
Ideal Flow (vphpl)	1900	1900	1900	1900	1900	1900
Total Lost time (s)	3.0	3.0	3.0	3.0	3.0	3.0
Lane Util. Factor	0.97	0.95	0.91	0.91	0.97	1.00
Frt	1.00	1.00	0.98	0.85	1.00	0.85
Flt Protected	0.95	1.00	1.00	1.00	0.95	1.00
Satd. Flow (prot)	3433	3539	3312	1441	3433	1583
Flt Permitted	0.95	1.00	1.00	1.00	0.95	1.00
Satd. Flow (perm)	3433	3539	3312	1441	3433	1583
Volume (vph)	1251	756	634	863	717	825
Peak-hour factor, PHF	0.95	0.95	0.95	0.95	0.95	0.95
Adj. Flow (vph)	1317	796	667	908	755	868
RTOR Reduction (vph)	0	0	14	4	0	482
Lane Group Flow (vph)	1317	796	775	782	755	386
Turn Type	Prot			pm+ov		Perm
Protected Phases	5	2	6	4	4	
Permitted Phases				6		4
Actuated Green, G (s)	33.0	60.0	20.0	45.5	25.5	25.5
Effective Green, g (s)	37.0	64.0	24.0	54.0	30.0	30.0
Actuated g/C Ratio	0.37	0.64	0.24	0.54	0.30	0.30
Clearance Time (s)	7.0	7.0	7.0	7.5	7.5	7.5
Vehicle Extension (s)	2.0	3.0	3.0	3.0	3.0	3.0
Lane Grp Cap (vph)	1270	2265	795	821	1030	475
v/s Ratio Prot	c0.38	0.22	c0.23	c0.29	0.22	
v/s Ratio Perm				0.26		0.24
v/c Ratio	1.04	0.35	0.97	0.95	0.73	0.81
Uniform Delay, d1	31.5	8.4	37.7	21.8	31.4	32.4
Progression Factor	1.00	1.00	1.00	1.00	1.00	1.00
Incremental Delay, d2	35.4	0.1	25.5	20.7	2.7	10.2
Delay (s)	66.9	8.5	63.2	42.5	34.1	42.6
Level of Service	E	A	E	D	C	D
Approach Delay (s)		44.9	52.8		38.6	
Approach LOS		D	D		D	

Intersection Summary			
HCM Average Control Delay	45.3	HCM Level of Service	D
HCM Volume to Capacity ratio	0.99		
Actuated Cycle Length (s)	100.0	Sum of lost time (s)	6.0
Intersection Capacity Utilization	92.9%	ICU Level of Service	F
Analysis Period (min)	15		
c Critical Lane Group			

HCM Signalized Intersection Capacity Analysis
24: Pacific Blvd & Loudoun County Parkway

Kincora
Total Future 2025

Movement	EBL	EBT	EBR	WBL	WBT	WBR	NBL	NBT	NBR	SBL	SBT	SBR
Lane Configurations												
Ideal Flow (vphpl)	1900	1900	1900	1900	1900	1900	1900	1900	1900	1900	1900	1900
Total Lost time (s)	4.0		4.0	4.0		4.0	4.0	4.0	4.0	4.0	4.0	4.0
Lane Util. Factor	0.97		1.00	0.97		0.88	0.97	0.95	1.00	0.97	0.95	1.00
Frt	1.00		0.85	1.00		0.85	1.00	1.00	0.85	1.00	1.00	0.85
Flt Protected	0.95		1.00	0.95		1.00	0.95	1.00	1.00	0.95	1.00	1.00
Satd. Flow (prot)	3433		1583	3433		2787	3433	3539	1583	3433	3539	1583
Flt Permitted	0.95		1.00	0.95		1.00	0.95	1.00	1.00	0.95	1.00	1.00
Satd. Flow (perm)	3433		1583	3433		2787	3433	3539	1583	3433	3539	1583
Volume (vph)	354	0	768	257	0	1857	420	1550	117	926	1508	213
Peak-hour factor, PHF	0.95	0.95	0.95	0.95	0.95	0.95	0.95	0.95	0.95	0.95	0.95	0.95
Adj. Flow (vph)	373	0	808	271	0	1955	442	1632	123	975	1587	224
RTOR Reduction (vph)	0	0	0	0	0	0	0	0	38	0	0	62
Lane Group Flow (vph)	373	0	808	271	0	1955	442	1632	85	975	1587	162
Turn Type	Prot		Free	Prot		Free	Prot		pm+ov	Prot		pm+ov
Protected Phases	7	4		3	8		5	2	3	1	6	7
Permitted Phases			Free			Free			2			6
Actuated Green, G (s)	9.1		112.9	9.1		112.9	16.2	60.6	69.7	24.2	68.6	77.7
Effective Green, g (s)	10.1		112.9	10.1		112.9	19.2	63.6	73.7	27.2	71.6	81.7
Actuated g/C Ratio	0.09		1.00	0.09		1.00	0.17	0.56	0.65	0.24	0.63	0.72
Clearance Time (s)	5.0			5.0			7.0	7.0	5.0	7.0	7.0	5.0
Vehicle Extension (s)	2.0			2.0			2.0	3.0	2.0	2.0	3.0	2.0
Lane Grp Cap (vph)	307		1583	307		2787	584	1994	1089	827	2244	1202
v/s Ratio Prot	c0.11			0.08			0.13	c0.46	0.01	c0.28	0.45	0.01
v/s Ratio Perm			0.51			0.70			0.05			0.09
v/c Ratio	1.21		0.51	0.88		0.70	0.76	0.82	0.08	1.18	0.71	0.13
Uniform Delay, d1	51.4		0.0	50.8		0.0	44.6	20.0	7.2	42.9	13.7	4.8
Progression Factor	1.00		1.00	1.00		1.00	1.00	1.00	1.00	1.00	1.00	1.00
Incremental Delay, d2	122.8		1.2	23.8		1.5	5.0	2.7	0.0	93.0	1.0	0.0
Delay (s)	174.2		1.2	74.7		1.5	49.6	22.7	7.2	135.8	14.7	4.8
Level of Service	F		A	E		A	D	C	A	F	B	A
Approach Delay (s)		55.8			10.4			27.2			56.3	
Approach LOS		E			B			C			E	

Intersection Summary			
HCM Average Control Delay	36.5	HCM Level of Service	D
HCM Volume to Capacity ratio	0.96		
Actuated Cycle Length (s)	112.9	Sum of lost time (s)	12.0
Intersection Capacity Utilization	96.0%	ICU Level of Service	F
Analysis Period (min)	15		

c Critical Lane Group

HCM Unsignalized Intersection Capacity Analysis
25: Russel Branch Pkwy & Richfield Way

Kincora
Total Future 2025

Movement	EBL	EBT	EBR	WBL	WBT	WBR	NBL	NBT	NBR	SBL	SBT	SBR
Lane Configurations												
Sign Control		Free			Free			Stop			Stop	
Grade		0%			0%			0%			0%	
Volume (veh/h)	0	514	5	0	1273	0	5	0	0	0	0	0
Peak Hour Factor	0.92	0.92	0.92	0.92	0.92	0.92	0.92	0.92	0.92	0.92	0.92	0.92
Hourly flow rate (vph)	0	559	5	0	1384	0	5	0	0	0	0	0
Pedestrians												
Lane Width (ft)												
Walking Speed (ft/s)												
Percent Blockage												
Right turn flare (veh)												
Median type								None			None	
Median storage veh)												
Upstream signal (ft)												
pX, platoon unblocked												
vC, conflicting volume	1384			564			1251	1942	279	1663	1948	692
vC1, stage 1 conf vol												
vC2, stage 2 conf vol												
vCu, unblocked vol	1384			564			1251	1942	279	1663	1948	692
tC, single (s)	4.1			4.1			7.5	6.5	6.9	7.5	6.5	6.9
tC, 2 stage (s)												
tF (s)	2.2			2.2			3.5	4.0	3.3	3.5	4.0	3.3
p0 queue free %	100			100			96	100	100	100	100	100
cM capacity (veh/h)	491			1004			129	64	718	64	64	386

Direction, Lane #	EB 1	EB 2	EB 3	EB 4	WB 1	WB 2	WB 3	WB 4	NB 1	NB 2	SB 1	SB 2
Volume Total	0	279	279	5	0	692	692	0	5	0	0	0
Volume Left	0	0	0	0	0	0	0	0	5	0	0	0
Volume Right	0	0	0	5	0	0	0	0	0	0	0	0
cSH	1700	1700	1700	1700	1700	1700	1700	1700	129	1700	1700	1700
Volume to Capacity	0.00	0.16	0.16	0.00	0.00	0.41	0.41	0.00	0.04	0.00	0.00	0.00
Queue Length 95th (ft)	0	0	0	0	0	0	0	0	3	0	0	0
Control Delay (s)	0.0	0.0	0.0	0.0	0.0	0.0	0.0	0.0	34.1	0.0	0.0	0.0
Lane LOS									D	A	A	A
Approach Delay (s)	0.0				0.0				34.1		0.0	
Approach LOS									D		A	

Intersection Summary			
Average Delay	0.1		
Intersection Capacity Utilization	45.2%	ICU Level of Service	A
Analysis Period (min)	15		

Movement	EBL	EBT	EBR	WBL	WBT	WBR	NBL	NBT	NBR	SBL	SBT	SBR
Lane Configurations												
Ideal Flow (vphpl)	1900	1900	1900	1900	1900	1900	1900	1900	1900	1900	1900	1900
Total Lost time (s)	4.0	4.0		4.0	4.0	4.0		4.0	4.0	4.0	4.0	4.0
Lane Util. Factor	1.00	0.95		1.00	0.95	1.00		0.95	1.00	1.00	0.95	1.00
Frt	1.00	1.00		1.00	1.00	0.85		1.00	0.85	1.00	1.00	0.85
Flt Protected	0.95	1.00		0.95	1.00	1.00		1.00	1.00	0.95	1.00	1.00
Satd. Flow (prot)	1770	3539		1770	3539	1583		3539	1583	1770	3539	1583
Flt Permitted	0.95	1.00		0.95	1.00	1.00		1.00	1.00	0.95	1.00	1.00
Satd. Flow (perm)	1770	3539		1770	3539	1583		3539	1583	1770	3539	1583
Volume (vph)	321	1033	0	145	452	794	0	651	533	1427	1793	463
Peak-hour factor, PHF	0.95	0.95	0.95	0.95	0.95	0.95	0.95	0.95	0.95	0.95	0.95	0.95
Adj. Flow (vph)	338	1087	0	153	476	836	0	685	561	1502	1887	487
RTOR Reduction (vph)	0	0	0	0	0	556	0	0	119	0	0	150
Lane Group Flow (vph)	338	1087	0	153	476	280	0	685	442	1502	1887	337
Turn Type	Prot		Perm	Prot		Perm	Prot		Perm	Prot		Perm
Protected Phases	7	4		3	8		5	2		1	6	
Permitted Phases			4			8			2			6
Actuated Green, G (s)	12.0	25.0		10.0	23.0	23.0		17.0	17.0	52.0	76.0	76.0
Effective Green, g (s)	13.0	26.0		13.0	26.0	26.0		20.0	20.0	55.0	79.0	79.0
Actuated g/C Ratio	0.10	0.20		0.10	0.20	0.20		0.15	0.15	0.42	0.61	0.61
Clearance Time (s)	5.0	5.0		7.0	7.0	7.0		7.0	7.0	7.0	7.0	7.0
Vehicle Extension (s)	2.0	2.0		2.0	2.0	2.0		2.0	2.0	2.0	2.0	2.0
Lane Grp Cap (vph)	177	708		177	708	317		544	244	749	2151	962
v/s Ratio Prot	c0.19	c0.31		0.09	0.13			0.19		c0.85	0.53	
v/s Ratio Perm						0.18			c0.28			0.21
v/c Ratio	1.91	1.54		0.86	0.67	0.88		1.26	1.81	2.01	0.88	0.35
Uniform Delay, d1	58.5	52.0		57.6	48.1	50.5		55.0	55.0	37.5	21.4	12.7
Progression Factor	1.00	1.00		1.00	1.00	1.00		1.00	1.00	1.00	1.00	1.00
Incremental Delay, d2	429.7	248.0		31.9	2.0	23.3		131.0	380.4	457.1	4.3	0.1
Delay (s)	488.2	300.0		89.5	50.0	73.9		186.0	435.4	494.6	25.7	12.8
Level of Service	F	F		F	D	E		F	F	F	C	B
Approach Delay (s)		344.6			67.8			298.3			205.8	
Approach LOS		F			E			F			F	

Intersection Summary			
HCM Average Control Delay	219.6	HCM Level of Service	F
HCM Volume to Capacity ratio	1.85		
Actuated Cycle Length (s)	130.0	Sum of lost time (s)	16.0
Intersection Capacity Utilization	150.6%	ICU Level of Service	H
Analysis Period (min)	15		

c Critical Lane Group

Movement	WBL	WBR	NBT	NBR	SBL	SBT
Lane Configurations						
Sign Control	Stop		Free			Free
Grade	0%		0%			0%
Volume (veh/h)	0	450	734	193	0	1938
Peak Hour Factor	0.95	0.95	0.95	0.95	0.95	0.95
Hourly flow rate (vph)	0	474	773	203	0	2040
Pedestrians						
Lane Width (ft)						
Walking Speed (ft/s)						
Percent Blockage						
Right turn flare (veh)						
Median type	None					
Median storage veh)						
Upstream signal (ft)			535			850
pX, platoon unblocked	0.48	0.95			0.95	
vC, conflicting volume	1894	488			976	
vC1, stage 1 conf vol						
vC2, stage 2 conf vol						
vCu, unblocked vol	1483	413			925	
tC, single (s)	6.8	*5.2			4.1	
tC, 2 stage (s)						
tF (s)	3.5	3.3			2.2	
p0 queue free %	100	31			100	
cM capacity (veh/h)	55	684			700	

Direction, Lane #	WB 1	NB 1	NB 2	SB 1	SB 2
Volume Total	474	515	461	1020	1020
Volume Left	0	0	0	0	0
Volume Right	474	0	203	0	0
cSH	684	1700	1700	1700	1700
Volume to Capacity	0.69	0.30	0.27	0.60	0.60
Queue Length 95th (ft)	139	0	0	0	0
Control Delay (s)	21.2	0.0	0.0	0.0	0.0
Lane LOS	C				
Approach Delay (s)	21.2	0.0		0.0	
Approach LOS	C				

Intersection Summary				
Average Delay	2.9			
Intersection Capacity Utilization	61.0%	ICU Level of Service		B
Analysis Period (min)	15			

* User Entered Value

Movement	WBL	WBR	NBT	NBR	SBL	SBT
Lane Configurations						
Ideal Flow (vphpl)	1900	1900	1900	1900	1900	1900
Total Lost time (s)	4.0		4.0			4.0
Lane Util. Factor	1.00		0.95			0.95
Frt	0.96		0.99			1.00
Flt Protected	0.97		1.00			1.00
Satd. Flow (prot)	1711		3509			3533
Flt Permitted	0.97		1.00			0.87
Satd. Flow (perm)	1711		3509			3089
Volume (vph)	95	64	751	45	67	1871
Peak-hour factor, PHF	0.95	0.95	0.95	0.95	0.95	0.95
Adj. Flow (vph)	100	67	791	47	71	1969
RTOR Reduction (vph)	18	0	4	0	0	0
Lane Group Flow (vph)	149	0	834	0	0	2040
Turn Type					Perm	
Protected Phases	8		2			6
Permitted Phases					6	
Actuated Green, G (s)	11.4		73.9			73.9
Effective Green, g (s)	14.4		76.9			76.9
Actuated g/C Ratio	0.15		0.77			0.77
Clearance Time (s)	7.0		7.0			7.0
Vehicle Extension (s)	2.0		2.0			2.0
Lane Grp Cap (vph)	248		2717			2392
v/s Ratio Prot	c0.09		0.24			
v/s Ratio Perm						c0.66
v/c Ratio	0.60		0.31			0.85
Uniform Delay, d1	39.8		3.3			7.4
Progression Factor	1.00		1.00			1.00
Incremental Delay, d2	2.8		0.0			3.0
Delay (s)	42.6		3.3			10.5
Level of Service	D		A			B
Approach Delay (s)	42.6		3.3			10.5
Approach LOS	D		A			B

Intersection Summary			
HCM Average Control Delay	10.3	HCM Level of Service	B
HCM Volume to Capacity ratio	0.81		
Actuated Cycle Length (s)	99.3	Sum of lost time (s)	8.0
Intersection Capacity Utilization	95.0%	ICU Level of Service	F
Analysis Period (min)	15		

c Critical Lane Group

Movement	WBL	WBR	NBT	NBR	SBL	SBT
Lane Configurations						
Sign Control	Stop		Free			Free
Grade	0%		0%			0%
Volume (veh/h)	0	11	1709	56	0	3683
Peak Hour Factor	0.95	0.95	0.95	0.95	0.95	0.95
Hourly flow rate (vph)	0	12	1799	59	0	3877
Pedestrians						
Lane Width (ft)						
Walking Speed (ft/s)						
Percent Blockage						
Right turn flare (veh)						
Median type	None					
Median storage veh)						
Upstream signal (ft)			844			
pX, platoon unblocked	0.86	0.86			0.86	
vC, conflicting volume	3767	929			1858	
vC1, stage 1 conf vol						
vC2, stage 2 conf vol						
vCu, unblocked vol	4047	759			1835	
tC, single (s)	6.8	6.9			4.1	
tC, 2 stage (s)						
tF (s)	3.5	3.3			2.2	
p0 queue free %	100	96			100	
cM capacity (veh/h)	2	301			283	

Direction, Lane #	WB 1	NB 1	NB 2	SB 1	SB 2
Volume Total	12	1199	659	1938	1938
Volume Left	0	0	0	0	0
Volume Right	12	0	59	0	0
cSH	301	1700	1700	1700	1700
Volume to Capacity	0.04	0.71	0.39	1.14	1.14
Queue Length 95th (ft)	3	0	0	0	0
Control Delay (s)	17.4	0.0	0.0	0.0	0.0
Lane LOS	C				
Approach Delay (s)	17.4	0.0		0.0	
Approach LOS	C				

Intersection Summary			
Average Delay	0.0		
Intersection Capacity Utilization	105.1%	ICU Level of Service	G
Analysis Period (min)	15		

Movement	WBL	WBR	NBT	NBR	SBL	SBT
Lane Configurations						
Sign Control	Stop		Free			Free
Grade	0%		0%			0%
Volume (veh/h)	0	11	1664	56	0	3683
Peak Hour Factor	0.95	0.95	0.95	0.95	0.95	0.95
Hourly flow rate (vph)	0	12	1752	59	0	3877
Pedestrians						
Lane Width (ft)						
Walking Speed (ft/s)						
Percent Blockage						
Right turn flare (veh)						
Median type	None					
Median storage veh)						
Upstream signal (ft)						
pX, platoon unblocked						
vC, conflicting volume	3719	905			1811	
vC1, stage 1 conf vol						
vC2, stage 2 conf vol						
vCu, unblocked vol	3719	905			1811	
tC, single (s)	6.8	6.9			4.1	
tC, 2 stage (s)						
tF (s)	3.5	3.3			2.2	
p0 queue free %	100	96			100	
cM capacity (veh/h)	3	279			336	

Direction, Lane #	WB 1	NB 1	NB 2	SB 1	SB 2
Volume Total	12	1168	643	1938	1938
Volume Left	0	0	0	0	0
Volume Right	12	0	59	0	0
cSH	279	1700	1700	1700	1700
Volume to Capacity	0.04	0.69	0.38	1.14	1.14
Queue Length 95th (ft)	3	0	0	0	0
Control Delay (s)	18.4	0.0	0.0	0.0	0.0
Lane LOS	C				
Approach Delay (s)	18.4	0.0		0.0	
Approach LOS	C				

Intersection Summary			
Average Delay	0.0		
Intersection Capacity Utilization	105.1%	ICU Level of Service	G
Analysis Period (min)	15		

Movement	EBL	EBT	EBR	WBL	WBT	WBR	NBL	NBT	NBR	SBL	SBT	SBR
Lane Configurations												
Sign Control		Stop			Stop			Free			Free	
Grade		0%			0%			0%			0%	
Volume (veh/h)	0	0	482	0	0	11	0	1652	22	0	3201	115
Peak Hour Factor	0.95	0.95	0.95	0.95	0.95	0.95	0.95	0.95	0.95	0.95	0.95	0.95
Hourly flow rate (vph)	0	0	507	0	0	12	0	1739	23	0	3369	121
Pedestrians												
Lane Width (ft)												
Walking Speed (ft/s)												
Percent Blockage												
Right turn flare (veh)												
Median type		None			None							
Median storage veh)												
Upstream signal (ft)												
pX, platoon unblocked												
vC, conflicting volume	4311	5192	1745	3435	5241	881	3491			1762		
vC1, stage 1 conf vol												
vC2, stage 2 conf vol												
vCu, unblocked vol	4311	5192	1745	3435	5241	881	3491			1762		
tC, single (s)	7.5	6.5	*5.2	7.5	6.5	6.9	4.1			4.1		
tC, 2 stage (s)												
tF (s)	3.5	4.0	3.3	3.5	4.0	3.3	2.2			2.2		
p0 queue free %	100	100	0	0	100	96	100			100		
cM capacity (veh/h)	1	0	175	0	0	290	71			350		

Direction, Lane #	EB 1	WB 1	NB 1	NB 2	SB 1	SB 2
Volume Total	507	12	1159	603	2246	1244
Volume Left	0	0	0	0	0	0
Volume Right	507	12	0	23	0	121
cSH	175	290	1700	1700	1700	1700
Volume to Capacity	2.89	0.04	0.68	0.35	1.32	0.73
Queue Length 95th (ft)	1142	3	0	0	0	0
Control Delay (s)	907.8	17.9	0.0	0.0	0.0	0.0
Lane LOS	F	C				
Approach Delay (s)	907.8	17.9	0.0		0.0	
Approach LOS	F	C				

Intersection Summary			
Average Delay	79.8		
Intersection Capacity Utilization	128.7%	ICU Level of Service	H
Analysis Period (min)	15		

* User Entered Value

Movement	EBL	EBR	NBL	NBT	SBT	SBR
Lane Configurations						
Sign Control	Stop			Free	Free	
Grade	0%			0%	0%	
Volume (veh/h)	0	493	0	1663	2824	137
Peak Hour Factor	0.95	0.95	0.95	0.95	0.95	0.95
Hourly flow rate (vph)	0	519	0	1751	2973	144
Pedestrians						
Lane Width (ft)						
Walking Speed (ft/s)						
Percent Blockage						
Right turn flare (veh)						
Median type	None					
Median storage veh)						
Upstream signal (ft)					936	
pX, platoon unblocked	0.34	0.34	0.34			
vC, conflicting volume	3920	1558	3117			
vC1, stage 1 conf vol						
vC2, stage 2 conf vol						
vCu, unblocked vol	7668	696	5297			
tC, single (s)	6.8	*5.2	4.1			
tC, 2 stage (s)						
tF (s)	3.5	3.3	2.2			
p0 queue free %	100	0	100			
cM capacity (veh/h)	0	182	4			

Direction, Lane #	EB 1	NB 1	NB 2	SB 1	SB 2
Volume Total	519	875	875	1982	1135
Volume Left	0	0	0	0	0
Volume Right	519	0	0	0	144
cSH	182	1700	1700	1700	1700
Volume to Capacity	2.85	0.51	0.51	1.17	0.67
Queue Length 95th (ft)	1158	0	0	0	0
Control Delay (s)	887.0	0.0	0.0	0.0	0.0
Lane LOS	F				
Approach Delay (s)	887.0	0.0		0.0	
Approach LOS	F				

Intersection Summary			
Average Delay	85.5		
Intersection Capacity Utilization	119.6%	ICU Level of Service	H
Analysis Period (min)	15		

* User Entered Value

Movement	EBL	EBR	NBL	NBT	SBT	SBR
Lane Configurations						
Ideal Flow (vphpl)	1900	1900	1900	1900	1900	1900
Total Lost time (s)	4.0			4.0	4.0	
Lane Util. Factor	1.00			0.95	0.95	
Frt	0.90			1.00	1.00	
Flt Protected	0.99			0.99	1.00	
Satd. Flow (prot)	1660			3504	3529	
Flt Permitted	0.99			0.52	1.00	
Satd. Flow (perm)	1660			1828	3529	
Volume (vph)	281	681	337	1326	2279	45
Peak-hour factor, PHF	0.95	0.95	0.95	0.95	0.95	0.95
Adj. Flow (vph)	296	717	355	1396	2399	47
RTOR Reduction (vph)	6	0	0	0	1	0
Lane Group Flow (vph)	1007	0	0	1751	2445	0
Turn Type			Perm			
Protected Phases	4			2	6	
Permitted Phases			2			
Actuated Green, G (s)	31.0			85.0	85.0	
Effective Green, g (s)	34.0			88.0	88.0	
Actuated g/C Ratio	0.26			0.68	0.68	
Clearance Time (s)	7.0			7.0	7.0	
Vehicle Extension (s)	2.0			2.0	2.0	
Lane Grp Cap (vph)	434			1237	2389	
v/s Ratio Prot	c0.61				0.69	
v/s Ratio Perm				c0.96		
v/c Ratio	2.32			6.23dl	1.02	
Uniform Delay, d1	48.0			21.0	21.0	
Progression Factor	1.00			1.00	1.00	
Incremental Delay, d2	601.4			191.8	24.6	
Delay (s)	649.4			212.8	45.6	
Level of Service	F			F	D	
Approach Delay (s)	649.4			212.8	45.6	
Approach LOS	F			F	D	

Intersection Summary			
HCM Average Control Delay	219.2	HCM Level of Service	F
HCM Volume to Capacity ratio	1.67		
Actuated Cycle Length (s)	130.0	Sum of lost time (s)	8.0
Intersection Capacity Utilization	178.4%	ICU Level of Service	H
Analysis Period (min)	15		

dl Defacto Left Lane. Recode with 1 though lane as a left lane.
c Critical Lane Group

Movement	EBL	EBR	NBL	NBT	SBT	SBR
Lane Configurations						
Ideal Flow (vphpl)	1900	1900	1900	1900	1900	1900
Total Lost time (s)	4.0			4.0	4.0	
Lane Util. Factor	1.00			0.95	0.95	
Frt	0.91			1.00	0.99	
Flt Protected	0.98			0.99	1.00	
Satd. Flow (prot)	1667			3494	3518	
Flt Permitted	0.98			0.50	1.00	
Satd. Flow (perm)	1667			1752	3518	
Volume (vph)	336	679	414	1192	1646	67
Peak-hour factor, PHF	0.95	0.95	0.95	0.95	0.95	0.95
Adj. Flow (vph)	354	715	436	1255	1733	71
RTOR Reduction (vph)	28	0	0	0	2	0
Lane Group Flow (vph)	1041	0	0	1691	1802	0
Turn Type			Perm			
Protected Phases	4			2	6	
Permitted Phases			2			
Actuated Green, G (s)	29.0			87.0	87.0	
Effective Green, g (s)	32.0			90.0	90.0	
Actuated g/C Ratio	0.25			0.69	0.69	
Clearance Time (s)	7.0			7.0	7.0	
Vehicle Extension (s)	2.0			2.0	2.0	
Lane Grp Cap (vph)	410			1213	2436	
v/s Ratio Prot	c0.62				0.51	
v/s Ratio Perm				c0.97		
v/c Ratio	2.54			4.84dl	0.74	
Uniform Delay, d1	49.0			20.0	12.6	
Progression Factor	1.00			1.00	1.00	
Incremental Delay, d2	699.8			182.4	1.0	
Delay (s)	748.8			202.4	13.7	
Level of Service	F			F	B	
Approach Delay (s)	748.8			202.4	13.7	
Approach LOS	F			F	B	

Intersection Summary			
HCM Average Control Delay	255.8	HCM Level of Service	F
HCM Volume to Capacity ratio	1.69		
Actuated Cycle Length (s)	130.0	Sum of lost time (s)	8.0
Intersection Capacity Utilization	163.0%	ICU Level of Service	H
Analysis Period (min)	15		

dl Defacto Left Lane. Recode with 1 though lane as a left lane.
c Critical Lane Group

Movement	EBL	EBR	NBL	NBT	SBT	SBR
Lane Configurations						
Ideal Flow (vphpl)	1900	1900	1900	1900	1900	1900
Total Lost time (s)	4.0			4.0	4.0	
Lane Util. Factor	1.00			0.95	0.95	
Frt	0.90			1.00	0.99	
Flt Protected	0.99			0.99	1.00	
Satd. Flow (prot)	1661			3492	3512	
Flt Permitted	0.99			0.53	1.00	
Satd. Flow (perm)	1661			1863	3512	
Volume (vph)	286	679	414	1115	1033	55
Peak-hour factor, PHF	0.95	0.95	0.95	0.95	0.95	0.95
Adj. Flow (vph)	301	715	436	1174	1087	58
RTOR Reduction (vph)	66	0	0	0	3	0
Lane Group Flow (vph)	950	0	0	1610	1142	0
Turn Type			Perm			
Protected Phases	4			2	6	
Permitted Phases			2			
Actuated Green, G (s)	23.0			93.0	93.0	
Effective Green, g (s)	26.0			96.0	96.0	
Actuated g/C Ratio	0.20			0.74	0.74	
Clearance Time (s)	7.0			7.0	7.0	
Vehicle Extension (s)	2.0			2.0	2.0	
Lane Grp Cap (vph)	332			1376	2593	
v/s Ratio Prot	c0.57				0.33	
v/s Ratio Perm				c0.86		
v/c Ratio	2.86			1.48dl	0.44	
Uniform Delay, d1	52.0			17.0	6.6	
Progression Factor	1.00			1.00	1.00	
Incremental Delay, d2	846.4			84.7	0.0	
Delay (s)	898.4			101.7	6.6	
Level of Service	F			F	A	
Approach Delay (s)	898.4			101.7	6.6	
Approach LOS	F			F	A	

Intersection Summary			
HCM Average Control Delay	287.5	HCM Level of Service	F
HCM Volume to Capacity ratio	1.53		
Actuated Cycle Length (s)	130.0	Sum of lost time (s)	8.0
Intersection Capacity Utilization	140.8%	ICU Level of Service	H
Analysis Period (min)	15		

dl Defacto Left Lane. Recode with 1 though lane as a left lane.
c Critical Lane Group

Movement	EBL	EBT	WBT	WBR	SWL	SWR
Lane Configurations		↑↑	↑↑			↱↱
Sign Control		Free	Free		Stop	
Grade		0%	0%		0%	
Volume (veh/h)	0	2984	704	0	0	687
Peak Hour Factor	0.95	0.95	0.95	0.95	0.95	0.95
Hourly flow rate (vph)	0	3141	741	0	0	723
Pedestrians						
Lane Width (ft)						
Walking Speed (ft/s)						
Percent Blockage						
Right turn flare (veh)						
Median type					None	
Median storage veh)						
Upstream signal (ft)		411				
pX, platoon unblocked					0.81	
vC, conflicting volume	741				2312	371
vC1, stage 1 conf vol						
vC2, stage 2 conf vol						
vCu, unblocked vol	741				2386	371
tC, single (s)	4.1				6.8	6.9
tC, 2 stage (s)						
tF (s)	2.2				3.5	3.3
p0 queue free %	100				100	0
cM capacity (veh/h)	862				23	627

Direction, Lane #	EB 1	EB 2	WB 1	WB 2	SW 1	SW 2
Volume Total	1571	1571	371	371	362	362
Volume Left	0	0	0	0	0	0
Volume Right	0	0	0	0	362	362
cSH	1700	1700	1700	1700	627	627
Volume to Capacity	0.92	0.92	0.22	0.22	0.58	0.58
Queue Length 95th (ft)	0	0	0	0	92	92
Control Delay (s)	0.0	0.0	0.0	0.0	18.3	18.3
Lane LOS					C	C
Approach Delay (s)	0.0		0.0		18.3	
Approach LOS					C	

Intersection Summary			
Average Delay	2.9		
Intersection Capacity Utilization	85.8%	ICU Level of Service	E
Analysis Period (min)	15		

Movement	EBL	EBR	NBL	NBT	SBT	SBR
Lane Configurations	↰↰			↑↑	↑↑	
Sign Control	Stop			Free	Free	
Grade	0%			0%	0%	
Volume (veh/h)	286	670	276	1126	418	96
Peak Hour Factor	0.95	0.95	0.95	0.95	0.95	0.95
Hourly flow rate (vph)	301	705	291	1185	440	101
Pedestrians						
Lane Width (ft)						
Walking Speed (ft/s)						
Percent Blockage						
Right turn flare (veh)						
Median type	None					
Median storage veh)						
Upstream signal (ft)				506		
pX, platoon unblocked	0.81					
vC, conflicting volume	1664	271	541			
vC1, stage 1 conf vol						
vC2, stage 2 conf vol						
vCu, unblocked vol	1586	271	541			
tC, single (s)	6.8	6.9	4.1			
tC, 2 stage (s)						
tF (s)	3.5	3.3	2.2			
p0 queue free %	0	3	72			
cM capacity (veh/h)	57	727	1024			

Direction, Lane #	EB 1	EB 2	NB 1	NB 2	SB 1	SB 2
Volume Total	201	806	686	790	293	248
Volume Left	201	100	291	0	0	0
Volume Right	0	705	0	0	0	101
cSH	57	297	1024	1700	1700	1700
Volume to Capacity	3.49	2.72	0.28	0.46	0.17	0.15
Queue Length 95th (ft)	Err	1702	29	0	0	0
Control Delay (s)	Err	808.6	6.3	0.0	0.0	0.0
Lane LOS	F	F	A			
Approach Delay (s)	2641.5		2.9		0.0	
Approach LOS	F					

Intersection Summary			
Average Delay	880.7		
Intersection Capacity Utilization	93.2%	ICU Level of Service	F
Analysis Period (min)	15		

HCM Signalized Intersection Capacity Analysis — Kincora
11: Smith Switch Road & Loudoun County Parkway — Total Future 2025

Movement	EBL	EBT	EBR	WBL	WBT	WBR	NBL	NBT	NBR	SBL	SBT	SBR
Lane Configurations												
Ideal Flow (vphpl)	1900	1900	1900	1900	1900	1900	1900	1900	1900	1900	1900	1900
Total Lost time (s)	4.0	4.0		4.0	4.0		4.0	4.0		4.0	4.0	
Lane Util. Factor	1.00	0.95		1.00	0.95		1.00	0.95		1.00	0.95	
Frt	1.00	1.00		1.00	0.91		1.00	1.00		1.00	0.99	
Flt Protected	0.95	1.00		0.95	1.00		0.95	1.00		0.95	1.00	
Satd. Flow (prot)	1770	3534		1770	3236		1770	3533		1770	3499	
Flt Permitted	0.95	1.00		0.95	1.00		0.95	1.00		0.26	1.00	
Satd. Flow (perm)	1770	3534		1770	3236		1770	3533		482	3499	
Volume (vph)	102	492	5	9	344	459	11	909	10	451	847	70
Peak-hour factor, PHF	0.95	0.95	0.95	0.95	0.95	0.95	0.95	0.95	0.95	0.95	0.95	0.95
Adj. Flow (vph)	107	518	5	9	362	483	12	957	11	475	892	74
RTOR Reduction (vph)	0	1	0	0	109	0	0	1	0	0	5	0
Lane Group Flow (vph)	107	522	0	9	736	0	12	967	0	475	961	0
Turn Type	Prot			Prot			Prot			Perm		
Protected Phases	7	4		3	8		5	2			6	
Permitted Phases										6		
Actuated Green, G (s)	4.0	30.2		0.7	26.9		1.8	58.0		49.2	49.2	
Effective Green, g (s)	7.0	33.2		3.7	29.9		4.8	61.0		52.2	52.2	
Actuated g/C Ratio	0.06	0.30		0.03	0.27		0.04	0.56		0.47	0.47	
Clearance Time (s)	7.0	7.0		7.0	7.0		7.0	7.0		7.0	7.0	
Vehicle Extension (s)	4.0	4.0		2.0	2.0		2.0	3.0		3.0	3.0	
Lane Grp Cap (vph)	113	1068		60	880		77	1961		229	1662	
v/s Ratio Prot	c0.06	c0.15		0.01	c0.23		0.01	c0.27			0.27	
v/s Ratio Perm										c0.98		
v/c Ratio	0.95	0.49		0.15	0.96dr		0.16	0.49		2.07	0.58	
Uniform Delay, d1	51.3	31.4		51.6	37.7		50.6	15.0		28.9	20.9	
Progression Factor	1.00	1.00		1.00	1.00		1.00	1.00		1.00	1.00	
Incremental Delay, d2	67.8	0.5		0.4	6.6		0.3	0.2		498.1	0.5	
Delay (s)	119.1	31.9		52.0	44.3		50.9	15.2		527.0	21.4	
Level of Service	F	C		D	D		D	B		F	C	
Approach Delay (s)		46.7			44.4			15.6			188.0	
Approach LOS		D			D			B			F	

Intersection Summary				
HCM Average Control Delay	90.6	HCM Level of Service		F
HCM Volume to Capacity ratio	1.58			
Actuated Cycle Length (s)	109.9	Sum of lost time (s)		20.0
Intersection Capacity Utilization	93.7%	ICU Level of Service		F
Analysis Period (min)	15			

dr Defacto Right Lane. Recode with 1 though lane as a right lane.
c Critical Lane Group

HCM Signalized Intersection Capacity Analysis — Kincora
21: Waxpool Road & Pacific Blvd — Total Future 2025

Movement	EBL	EBT	EBR	WBL	WBT	WBR	NBL	NBT	NBR	SBL	SBT	SBR
Lane Configurations												
Ideal Flow (vphpl)	1900	1900	1900	1900	1900	1900	1900	1900	1900	1900	1900	1900
Total Lost time (s)	3.0	3.0	3.0	3.0	3.0	3.0	3.0	3.0	3.0	3.0	3.0	3.0
Lane Util. Factor	0.94	0.86	1.00	0.97	0.86	1.00	0.97	0.95	1.00	0.97	0.95	1.00
Frt	1.00	1.00	0.85	1.00	1.00	0.85	1.00	1.00	0.85	1.00	1.00	0.85
Flt Protected	0.95	1.00	1.00	0.95	1.00	1.00	0.95	1.00	1.00	0.95	1.00	1.00
Satd. Flow (prot)	4990	6408	1583	3433	6408	1583	3433	3539	1583	3433	3539	1583
Flt Permitted	0.95	1.00	1.00	0.95	1.00	1.00	0.95	1.00	1.00	0.95	1.00	1.00
Satd. Flow (perm)	4990	6408	1583	3433	6408	1583	3433	3539	1583	3433	3539	1583
Volume (vph)	1178	1707	168	25	1338	863	189	183	30	750	116	1155
Peak-hour factor, PHF	0.95	0.95	0.95	0.95	0.95	0.95	0.95	0.95	0.95	0.95	0.95	0.95
Adj. Flow (vph)	1240	1797	177	26	1408	908	199	193	32	789	122	1216
RTOR Reduction (vph)	0	0	0	0	0	0	0	0	0	0	0	0
Lane Group Flow (vph)	1240	1797	177	26	1408	908	199	193	32	789	122	1216
Turn Type	Prot		Free	Prot		Free	Prot		Free	Prot		Free
Protected Phases	1	6		5	2		7	4		3	8	
Permitted Phases			Free			Free			Free			Free
Actuated Green, G (s)	21.7	69.6	145.0	3.7	51.6	145.0	11.1	10.7	145.0	33.0	32.6	145.0
Effective Green, g (s)	25.7	73.6	145.0	7.7	55.6	145.0	15.1	14.7	145.0	37.0	36.6	145.0
Actuated g/C Ratio	0.18	0.51	1.00	0.05	0.38	1.00	0.10	0.10	1.00	0.26	0.25	1.00
Clearance Time (s)	7.0	7.0		7.0	7.0		7.0	7.0		7.0	7.0	
Vehicle Extension (s)	2.0	3.0		2.0	3.0		3.0	3.0		3.0	3.0	
Lane Grp Cap (vph)	884	3253	1583	182	2457	1583	358	359	1583	876	893	1583
v/s Ratio Prot	c0.25	0.28		0.01	0.22		0.06	0.05		c0.23	0.03	
v/s Ratio Perm			0.11			0.57			0.02			c0.77
v/c Ratio	1.40	0.55	0.11	0.14	0.57	0.57	0.56	0.54	0.02	0.90	0.14	0.77
Uniform Delay, d1	59.6	24.4	0.0	65.5	35.3	0.0	61.8	61.9	0.0	52.2	42.0	0.0
Progression Factor	1.00	1.00	1.00	1.00	1.00	1.00	1.00	1.00	1.00	1.00	1.00	1.00
Incremental Delay, d2	188.1	0.7	0.1	0.1	1.0	1.5	1.9	1.6	0.0	12.3	0.1	3.6
Delay (s)	247.7	25.1	0.1	65.6	36.3	1.5	63.6	63.5	0.0	64.5	42.0	3.6
Level of Service	F	C	A	E	D	A	E	E	A	E	D	A
Approach Delay (s)		109.6			23.1			58.8			28.4	
Approach LOS		F			C			E			C	

Intersection Summary				
HCM Average Control Delay	60.7	HCM Level of Service		E
HCM Volume to Capacity ratio	0.92			
Actuated Cycle Length (s)	145.0	Sum of lost time (s)		6.0
Intersection Capacity Utilization	81.6%	ICU Level of Service		D
Analysis Period (min)	15			

c Critical Lane Group

Movement	WBL	WBR	NBT	NBR	SBL	SBT
Lane Configurations						
Sign Control	Stop		Free			Free
Grade	0%		0%			0%
Volume (veh/h)	0	13	1991	78	0	1489
Peak Hour Factor	0.95	0.95	0.95	0.95	0.95	0.95
Hourly flow rate (vph)	0	14	2096	82	0	1567
Pedestrians						
Lane Width (ft)						
Walking Speed (ft/s)						
Percent Blockage						
Right turn flare (veh)						
Median type	None					
Median storage veh)						
Upstream signal (ft)						
pX, platoon unblocked						
vC, conflicting volume	2921	1089			2178	
vC1, stage 1 conf vol						
vC2, stage 2 conf vol						
vCu, unblocked vol	2921	1089			2178	
tC, single (s)	6.8	6.9			4.1	
tC, 2 stage (s)						
tF (s)	3.5	3.3			2.2	
p0 queue free %	100	94			100	
cM capacity (veh/h)	12	211			241	

Direction, Lane #	WB 1	NB 1	NB 2	SB 1	SB 2
Volume Total	14	1397	781	784	784
Volume Left	0	0	0	0	0
Volume Right	14	0	82	0	0
cSH	211	1700	1700	1700	1700
Volume to Capacity	0.06	0.82	0.46	0.46	0.46
Queue Length 95th (ft)	5	0	0	0	0
Control Delay (s)	23.3	0.0	0.0	0.0	0.0
Lane LOS	C				
Approach Delay (s)	23.3	0.0		0.0	
Approach LOS	C				

Intersection Summary			
Average Delay	0.1		
Intersection Capacity Utilization	67.5%	ICU Level of Service	C
Analysis Period (min)	15		

Movement	EBL	EBT	EBR	WBL	WBT	WBR	NBL	NBT	NBR	SBL	SBT	SBR
Lane Configurations												
Sign Control		Stop			Stop			Free			Free	
Grade		0%			0%			0%			0%	
Volume (veh/h)	0	0	133	0	0	13	0	1971	31	0	1356	108
Peak Hour Factor	0.95	0.95	0.95	0.95	0.95	0.95	0.95	0.95	0.95	0.95	0.95	0.95
Hourly flow rate (vph)	0	0	140	0	0	14	0	2075	33	0	1427	114
Pedestrians												
Lane Width (ft)												
Walking Speed (ft/s)												
Percent Blockage												
Right turn flare (veh)												
Median type		None			None							
Median storage veh)												
Upstream signal (ft)												
pX, platoon unblocked												
vC, conflicting volume	2535	3592	771	2805	3632	1054	1541			2107		
vC1, stage 1 conf vol												
vC2, stage 2 conf vol												
vCu, unblocked vol	2535	3592	771	2805	3632	1054	1541			2107		
tC, single (s)	7.5	6.5	6.9	7.5	6.5	6.9	4.1			4.1		
tC, 2 stage (s)												
tF (s)	3.5	4.0	3.3	3.5	4.0	3.3	2.2			2.2		
p0 queue free %	100	100	59	100	100	94	100			100		
cM capacity (veh/h)	13	5	343	5	5	222	427			257		

Direction, Lane #	EB 1	WB 1	NB 1	NB 2	SB 1	SB 2
Volume Total	140	14	1383	724	952	589
Volume Left	0	0	0	0	0	0
Volume Right	140	14	0	33	0	114
cSH	343	222	1700	1700	1700	1700
Volume to Capacity	0.41	0.06	0.81	0.43	0.56	0.35
Queue Length 95th (ft)	48	5	0	0	0	0
Control Delay (s)	22.5	22.2	0.0	0.0	0.0	0.0
Lane LOS	C	C				
Approach Delay (s)	22.5	22.2	0.0		0.0	
Approach LOS	C	C				

Intersection Summary			
Average Delay	0.9		
Intersection Capacity Utilization	65.5%	ICU Level of Service	C
Analysis Period (min)	15		

HCM Unsignalized Intersection Capacity Analysis
32: Site Drive #5 & Pacific Blvd

Kincora
Total Future 2025

Movement	EBL	EBR	NBL	NBT	SBT	SBR
Lane Configurations						
Sign Control	Stop			Free	Free	
Grade	0%			0%	0%	
Volume (veh/h)	0	146	0	1984	1318	139
Peak Hour Factor	0.95	0.95	0.95	0.95	0.95	0.95
Hourly flow rate (vph)	0	154	0	2088	1387	146
Pedestrians						
Lane Width (ft)						
Walking Speed (ft/s)						
Percent Blockage						
Right turn flare (veh)						
Median type	None					
Median storage veh)						
Upstream signal (ft)					936	
pX, platoon unblocked	0.83	0.83	0.83			
vC, conflicting volume	2505	767	1534			
vC1, stage 1 conf vol						
vC2, stage 2 conf vol						
vCu, unblocked vol	2607	516	1439			
tC, single (s)	6.8	6.9	4.1			
tC, 2 stage (s)						
tF (s)	3.5	3.3	2.2			
p0 queue free %	100	63	100			
cM capacity (veh/h)	17	419	389			

Direction, Lane #	EB 1	NB 1	NB 2	SB 1	SB 2
Volume Total	154	1044	1044	925	609
Volume Left	0	0	0	0	0
Volume Right	154	0	0	0	146
cSH	419	1700	1700	1700	1700
Volume to Capacity	0.37	0.61	0.61	0.54	0.36
Queue Length 95th (ft)	41	0	0	0	0
Control Delay (s)	18.5	0.0	0.0	0.0	0.0
Lane LOS	C				
Approach Delay (s)	18.5	0.0		0.0	
Approach LOS	C				

Intersection Summary			
Average Delay	0.8		
Intersection Capacity Utilization	58.2%	ICU Level of Service	B
Analysis Period (min)	15		

HCM Signalized Intersection Capacity Analysis
33: Site Drive #2 & Pacific Blvd

Kincora
Total Future 2025

Movement	EBL	EBR	NBL	NBT	SBT	SBR
Lane Configurations						
Ideal Flow (vphpl)	1900	1900	1900	1900	1900	1900
Total Lost time (s)	4.0			4.0	4.0	
Lane Util. Factor	1.00			0.95	0.95	
Frt	0.89			1.00	0.99	
Flt Protected	0.99			0.99	1.00	
Satd. Flow (prot)	1646			3507	3513	
Flt Permitted	0.99			0.52	1.00	
Satd. Flow (perm)	1646			1848	3513	
Volume (vph)	70	272	370	1614	1186	62
Peak-hour factor, PHF	0.95	0.95	0.95	0.95	0.95	0.95
Adj. Flow (vph)	74	286	389	1699	1248	65
RTOR Reduction (vph)	74	0	0	0	3	0
Lane Group Flow (vph)	286	0	0	2088	1310	0
Turn Type			Perm			
Protected Phases	4			2	6	
Permitted Phases			2			
Actuated Green, G (s)	23.9			85.2	85.2	
Effective Green, g (s)	26.9			88.2	88.2	
Actuated g/C Ratio	0.22			0.72	0.72	
Clearance Time (s)	7.0			7.0	7.0	
Vehicle Extension (s)	2.0			2.0	2.0	
Lane Grp Cap (vph)	360			1324	2517	
v/s Ratio Prot	c0.17				0.37	
v/s Ratio Perm				c1.13		
v/c Ratio	0.79			1.86dl	0.52	
Uniform Delay, d1	45.5			17.4	7.9	
Progression Factor	1.00			1.00	1.00	
Incremental Delay, d2	10.7			263.3	0.1	
Delay (s)	56.2			280.8	8.0	
Level of Service	E			F	A	
Approach Delay (s)	56.2			280.8	8.0	
Approach LOS	E			F	A	

Intersection Summary			
HCM Average Control Delay	164.0	HCM Level of Service	F
HCM Volume to Capacity ratio	1.39		
Actuated Cycle Length (s)	123.1	Sum of lost time (s)	8.0
Intersection Capacity Utilization	120.8%	ICU Level of Service	H
Analysis Period (min)	15		

dl Defacto Left Lane. Recode with 1 though lane as a left lane.
c Critical Lane Group

Movement	EBL	EBR	NBL	NBT	SBT	SBR
Lane Configurations						
Ideal Flow (vphpl)	1900	1900	1900	1900	1900	1900
Total Lost time (s)	4.0			4.0	4.0	
Lane Util. Factor	1.00			0.95	0.95	
Frt	0.90			1.00	0.97	
Flt Protected	0.99			0.98	1.00	
Satd. Flow (prot)	1650			3470	3437	
Flt Permitted	0.99			0.50	1.00	
Satd. Flow (perm)	1650			1760	3437	
Volume (vph)	97	323	674	1010	925	220
Peak-hour factor, PHF	0.95	0.95	0.95	0.95	0.95	0.95
Adj. Flow (vph)	102	340	709	1063	974	232
RTOR Reduction (vph)	93	0	0	0	15	0
Lane Group Flow (vph)	349	0	0	1772	1191	0
Turn Type			Perm			
Protected Phases	4			2	6	
Permitted Phases			2			
Actuated Green, G (s)	27.2			87.1	87.1	
Effective Green, g (s)	30.2			90.1	90.1	
Actuated g/C Ratio	0.24			0.70	0.70	
Clearance Time (s)	7.0			7.0	7.0	
Vehicle Extension (s)	2.0			2.0	2.0	
Lane Grp Cap (vph)	388			1236	2414	
v/s Ratio Prot	c0.21				0.35	
v/s Ratio Perm				c1.01		
v/c Ratio	0.90			2.91dl	0.49	
Uniform Delay, d1	47.6			19.1	8.7	
Progression Factor	1.00			1.00	1.00	
Incremental Delay, d2	22.2			199.8	0.1	
Delay (s)	69.8			218.9	8.8	
Level of Service	E			F	A	
Approach Delay (s)	69.8			218.9	8.8	
Approach LOS	E			F	A	

Intersection Summary			
HCM Average Control Delay	125.5	HCM Level of Service	F
HCM Volume to Capacity ratio	1.30		
Actuated Cycle Length (s)	128.3	Sum of lost time (s)	8.0
Intersection Capacity Utilization	115.4%	ICU Level of Service	H
Analysis Period (min)	15		

dl Defacto Left Lane. Recode with 1 though lane as a left lane.
c Critical Lane Group

Movement	EBL	EBR	NBL	NBT	SBT	SBR
Lane Configurations						
Ideal Flow (vphpl)	1900	1900	1900	1900	1900	1900
Total Lost time (s)	4.0			4.0	4.0	
Lane Util. Factor	1.00			0.95	0.95	
Frt	0.89			1.00	0.99	
Flt Protected	0.99			0.98	1.00	
Satd. Flow (prot)	1644			3473	3498	
Flt Permitted	0.99			0.53	1.00	
Satd. Flow (perm)	1644			1892	3498	
Volume (vph)	76	313	423	684	832	70
Peak-hour factor, PHF	0.95	0.95	0.95	0.95	0.95	0.95
Adj. Flow (vph)	80	329	445	720	876	74
RTOR Reduction (vph)	108	0	0	0	6	0
Lane Group Flow (vph)	301	0	0	1165	944	0
Turn Type			Perm			
Protected Phases	4			2	6	
Permitted Phases			2			
Actuated Green, G (s)	20.0			62.1	62.1	
Effective Green, g (s)	23.0			65.1	65.1	
Actuated g/C Ratio	0.24			0.68	0.68	
Clearance Time (s)	7.0			7.0	7.0	
Vehicle Extension (s)	2.0			2.0	2.0	
Lane Grp Cap (vph)	393			1282	2370	
v/s Ratio Prot	c0.18				0.27	
v/s Ratio Perm				c0.62		
v/c Ratio	0.77			1.31dl	0.40	
Uniform Delay, d1	34.0			13.0	6.8	
Progression Factor	1.00			1.00	1.00	
Incremental Delay, d2	7.8			9.3	0.0	
Delay (s)	41.9			22.3	6.9	
Level of Service	D			C	A	
Approach Delay (s)	41.9			22.3	6.9	
Approach LOS	D			C	A	

Intersection Summary			
HCM Average Control Delay	19.7	HCM Level of Service	B
HCM Volume to Capacity ratio	0.87		
Actuated Cycle Length (s)	96.1	Sum of lost time (s)	8.0
Intersection Capacity Utilization	89.9%	ICU Level of Service	E
Analysis Period (min)	15		

dl Defacto Left Lane. Recode with 1 though lane as a left lane.
c Critical Lane Group

Movement	EBL	EBT	WBT	WBR	SWL	SWR
Lane Configurations		↑↑	↑↑			↱↑
Sign Control		Free	Free		Stop	
Grade		0%	0%		0%	
Volume (veh/h)	0	1427	690	0	0	535
Peak Hour Factor	0.95	0.95	0.95	0.95	0.95	0.95
Hourly flow rate (vph)	0	1502	726	0	0	563
Pedestrians						
Lane Width (ft)						
Walking Speed (ft/s)						
Percent Blockage						
Right turn flare (veh)						
Median type					None	
Median storage veh)						
Upstream signal (ft)		411				
pX, platoon unblocked					0.83	
vC, conflicting volume	726				1477	363
vC1, stage 1 conf vol						
vC2, stage 2 conf vol						
vCu, unblocked vol	726				1368	363
tC, single (s)	4.1				6.8	6.9
tC, 2 stage (s)						
tF (s)	2.2				3.5	3.3
p0 queue free %	100				100	11
cM capacity (veh/h)	873				114	634

Direction, Lane #	EB 1	EB 2	WB 1	WB 2	SW 1	SW 2
Volume Total	751	751	363	363	282	282
Volume Left	0	0	0	0	0	0
Volume Right	0	0	0	0	282	282
cSH	1700	1700	1700	1700	634	634
Volume to Capacity	0.44	0.44	0.21	0.21	0.44	0.44
Queue Length 95th (ft)	0	0	0	0	57	57
Control Delay (s)	0.0	0.0	0.0	0.0	15.1	15.1
Lane LOS					C	C
Approach Delay (s)	0.0		0.0		15.1	
Approach LOS					C	

Intersection Summary				
Average Delay	3.1			
Intersection Capacity Utilization	44.5%	ICU Level of Service	A	
Analysis Period (min)	15			

Movement	EBL	EBR	NBL	NBT	SBT	SBR
Lane Configurations	↰↰↱			↑↑	↑↑↳	
Sign Control	Stop			Free	Free	
Grade	0%			0%	0%	
Volume (veh/h)	76	302	311	449	599	100
Peak Hour Factor	0.95	0.95	0.95	0.95	0.95	0.95
Hourly flow rate (vph)	80	318	327	473	631	105
Pedestrians						
Lane Width (ft)						
Walking Speed (ft/s)						
Percent Blockage						
Right turn flare (veh)						
Median type	None					
Median storage veh)						
Upstream signal (ft)				506		
pX, platoon unblocked	0.95					
vC, conflicting volume	1574	368	736			
vC1, stage 1 conf vol						
vC2, stage 2 conf vol						
vCu, unblocked vol	1554	368	736			
tC, single (s)	6.8	6.9	4.1			
tC, 2 stage (s)						
tF (s)	3.5	3.3	2.2			
p0 queue free %	0	49	62			
cM capacity (veh/h)	62	629	866			

Direction, Lane #	EB 1	EB 2	NB 1	NB 2	SB 1	SB 2
Volume Total	53	345	485	315	420	315
Volume Left	53	27	327	0	0	0
Volume Right	0	318	0	0	0	105
cSH	62	367	866	1700	1700	1700
Volume to Capacity	0.87	0.94	0.38	0.19	0.25	0.19
Queue Length 95th (ft)	100	251	44	0	0	0
Control Delay (s)	186.9	66.6	9.5	0.0	0.0	0.0
Lane LOS	F	F	A			
Approach Delay (s)	82.7		5.7		0.0	
Approach LOS	F					

Intersection Summary			
Average Delay	19.4		
Intersection Capacity Utilization	63.0%	ICU Level of Service	B
Analysis Period (min)	15		

HCM Signalized Intersection Capacity Analysis — Kincora
5: Route 7 & Countryside Blvd — Total Future 2025

Movement	EBL	EBT	EBR	WBL	WBT	WBR	NBL	NBT	NBR	SBL	SBT	SBR
Lane Configurations												
Ideal Flow (vphpl)	1900	1900	1900	1900	1900	1900	1900	1900	1900	1900	1900	1900
Total Lost time (s)	3.0	3.0	3.0	3.0	3.0	3.0	3.0	3.0	3.0	3.0	3.0	3.0
Lane Util. Factor	0.97	0.86	1.00	0.97	0.86	1.00	0.97	0.95	1.00	0.97	0.95	1.00
Frt	1.00	1.00	0.85	1.00	1.00	0.85	1.00	1.00	0.85	1.00	1.00	0.85
Flt Protected	0.95	1.00	1.00	0.95	1.00	1.00	0.95	1.00	1.00	0.95	1.00	1.00
Satd. Flow (prot)	3433	6408	1583	3433	6408	1583	3433	3539	1583	3433	3539	1583
Flt Permitted	0.95	1.00	1.00	0.95	1.00	1.00	0.95	1.00	1.00	0.95	1.00	1.00
Satd. Flow (perm)	3433	6408	1583	3433	6408	1583	3433	3539	1583	3433	3539	1583
Volume (vph)	314	3262	166	134	2577	108	86	70	153	165	94	372
Peak-hour factor, PHF	0.95	0.95	0.95	0.95	0.95	0.95	0.95	0.95	0.95	0.95	0.95	0.95
Adj. Flow (vph)	331	3434	175	141	2713	114	91	74	161	174	99	392
RTOR Reduction (vph)	0	0	0	0	0	39	0	0	0	0	0	20
Lane Group Flow (vph)	331	3434	175	141	2713	75	91	74	161	174	99	372
Turn Type	Prot		Free	Prot		pm+ov	Prot		Free	Prot		pm+ov
Protected Phases	1	6		5	2	3	7	4		3	8	1
Permitted Phases			Free			2			Free			8
Actuated Green, G (s)	16.0	77.6	140.0	8.0	69.6	84.0	7.4	12.0	140.0	14.4	19.0	35.0
Effective Green, g (s)	20.0	81.6	140.0	12.0	73.6	92.0	11.4	16.0	140.0	18.4	23.0	43.0
Actuated g/C Ratio	0.14	0.58	1.00	0.09	0.53	0.66	0.08	0.11	1.00	0.13	0.16	0.31
Clearance Time (s)	7.0	7.0		7.0	7.0	7.0	7.0	7.0		7.0	7.0	7.0
Vehicle Extension (s)	2.0	2.0		3.0	2.0	2.0	2.0	2.0		2.0	2.0	2.0
Lane Grp Cap (vph)	490	3735	1583	294	3369	1074	280	404	1583	451	581	520
v/s Ratio Prot	0.10	c0.54		0.04	0.42	0.01	0.03	0.02		c0.05	0.03	c0.10
v/s Ratio Perm			0.11			0.04			0.10			0.13
v/c Ratio	0.68	0.92	0.11	0.48	0.81	0.07	0.33	0.18	0.10	0.39	0.17	0.72
Uniform Delay, d1	56.9	26.2	0.0	61.0	27.3	8.6	60.7	56.1	0.0	55.6	50.3	43.1
Progression Factor	1.00	1.00	1.00	1.00	1.00	1.00	1.00	1.00	1.00	1.00	1.00	1.00
Incremental Delay, d2	2.9	4.8	0.1	1.2	2.2	0.0	0.2	0.1	0.1	0.2	0.1	3.9
Delay (s)	59.8	31.1	0.1	62.3	29.5	8.6	60.9	56.2	0.1	55.8	50.3	46.9
Level of Service	E	C	A	E	C	A	E	E	A	E	D	D
Approach Delay (s)		32.1			30.2			29.8			49.8	
Approach LOS		C			C			C			D	

Intersection Summary

HCM Average Control Delay	32.8	HCM Level of Service	C
HCM Volume to Capacity ratio	0.80		
Actuated Cycle Length (s)	140.0	Sum of lost time (s)	6.0
Intersection Capacity Utilization	75.4%	ICU Level of Service	D
Analysis Period (min)	15		

c Critical Lane Group

HCM Signalized Intersection Capacity Analysis — Kincora
6: Route 7 & Palisade Parkway — Total Future 2025

Movement	EBL	EBT	EBR	WBL	WBT	WBR	NBL	NBT	NBR	SBL	SBT	SBR
Lane Configurations												
Ideal Flow (vphpl)	1900	1900	1900	1900	1900	1900	1900	1900	1900	1900	1900	1900
Total Lost time (s)	3.0	3.0	3.0	3.0	3.0	3.0	3.0	3.0	3.0	3.0	3.0	3.0
Lane Util. Factor	0.97	0.86	1.00	1.00	0.86	1.00	0.97	1.00	1.00	0.97	1.00	1.00
Frt	1.00	1.00	0.85	1.00	1.00	0.85	1.00	1.00	0.85	1.00	1.00	0.85
Flt Protected	0.95	1.00	1.00	0.95	1.00	1.00	0.95	1.00	1.00	0.95	1.00	1.00
Satd. Flow (prot)	3433	6408	1583	1770	6408	1583	3433	1863	1583	3433	1863	1583
Flt Permitted	0.95	1.00	1.00	0.95	1.00	1.00	0.95	1.00	1.00	0.95	1.00	1.00
Satd. Flow (perm)	3433	6408	1583	1770	6408	1583	3433	1863	1583	3433	1863	1583
Volume (vph)	162	2997	381	123	2539	73	58	34	42	131	82	208
Peak-hour factor, PHF	0.95	0.95	0.95	0.95	0.95	0.95	0.95	0.95	0.95	0.95	0.95	0.95
Adj. Flow (vph)	171	3155	401	129	2673	77	61	36	44	138	86	219
RTOR Reduction (vph)	0	0	0	0	0	0	0	0	8	0	0	22
Lane Group Flow (vph)	171	3155	401	129	2673	77	61	36	38	138	86	197
Turn Type	Prot		Free	Prot		Free	Prot		pm+ov	Prot		pm+ov
Protected Phases	1	6		5	2		7	4	5	3	8	1
Permitted Phases			Free			Free			4			8
Actuated Green, G (s)	10.8	68.3	120.0	10.9	68.4	120.0	4.0	4.8	15.7	8.0	8.8	19.6
Effective Green, g (s)	14.8	72.3	120.0	14.9	72.4	120.0	8.0	8.8	23.7	12.0	12.8	27.6
Actuated g/C Ratio	0.12	0.60	1.00	0.12	0.60	1.00	0.07	0.07	0.20	0.10	0.11	0.23
Clearance Time (s)	7.0	7.0		7.0	7.0		7.0	7.0	7.0	7.0	7.0	7.0
Vehicle Extension (s)	2.0	4.0		2.0	4.0		3.0	3.0	2.0	3.0	3.0	2.0
Lane Grp Cap (vph)	423	3861	1583	220	3866	1583	229	137	352	343	199	404
v/s Ratio Prot	0.05	c0.49		c0.07	0.42		0.02	0.02	0.01	c0.04	0.05	c0.06
v/s Ratio Perm			c0.25			0.05			0.01			0.06
v/c Ratio	0.40	0.82	0.25	0.59	0.69	0.05	0.27	0.26	0.11	0.40	0.43	0.49
Uniform Delay, d1	48.5	18.7	0.0	49.6	16.2	0.0	53.2	52.5	39.5	50.6	50.2	40.1
Progression Factor	1.00	1.00	1.00	1.00	1.00	1.00	1.00	1.00	1.00	1.00	1.00	1.00
Incremental Delay, d2	0.2	2.0	0.4	2.6	1.0	0.1	0.6	1.0	0.1	0.8	1.5	0.3
Delay (s)	48.8	20.7	0.4	52.2	17.2	0.1	53.8	53.6	39.5	51.4	51.7	40.4
Level of Service	D	C	A	D	B	A	D	D	D	D	D	D
Approach Delay (s)		19.8			18.3			49.3			46.0	
Approach LOS		B			B			D			D	

Intersection Summary

HCM Average Control Delay	21.4	HCM Level of Service	C
HCM Volume to Capacity ratio	0.71		
Actuated Cycle Length (s)	120.0	Sum of lost time (s)	9.0
Intersection Capacity Utilization	70.6%	ICU Level of Service	C
Analysis Period (min)	15		

c Critical Lane Group

Movement	WBL	WBR	NBT	NBR	SBL	SBT
Lane Configurations						
Ideal Flow (vphpl)	1900	1900	1900	1900	1900	1900
Total Lost time (s)	3.0	3.0	3.0		3.0	3.0
Lane Util. Factor	1.00	1.00	0.95		1.00	0.95
Frt	1.00	0.85	0.97		1.00	1.00
Flt Protected	0.95	1.00	1.00		0.95	1.00
Satd. Flow (prot)	1770	1583	3445		1770	3539
Flt Permitted	0.95	1.00	1.00		0.43	1.00
Satd. Flow (perm)	1770	1583	3445		798	3539
Volume (vph)	89	191	326	70	159	643
Peak-hour factor, PHF	0.95	0.95	0.95	0.95	0.95	0.95
Adj. Flow (vph)	94	201	343	74	167	677
RTOR Reduction (vph)	0	123	15	0	0	0
Lane Group Flow (vph)	94	78	402	0	167	677
Turn Type		pm+ov			pm+pt	
Protected Phases	4	1	2		1	6
Permitted Phases		4			6	
Actuated Green, G (s)	4.9	12.4	18.6		33.1	33.1
Effective Green, g (s)	8.9	20.4	23.1		37.6	37.6
Actuated g/C Ratio	0.17	0.39	0.44		0.72	0.72
Clearance Time (s)	7.0	7.0	7.5		7.0	7.5
Vehicle Extension (s)	2.0	2.0	2.0		2.0	2.0
Lane Grp Cap (vph)	300	706	1516		784	2535
v/s Ratio Prot	c0.05	0.02	0.12		0.05	c0.19
v/s Ratio Perm		0.03			0.11	
v/c Ratio	0.31	0.11	0.27		0.21	0.27
Uniform Delay, d1	19.1	10.3	9.3		2.5	2.6
Progression Factor	1.00	1.00	1.00		1.00	1.00
Incremental Delay, d2	0.2	0.0	0.0		0.0	0.0
Delay (s)	19.3	10.3	9.4		2.6	2.6
Level of Service	B	B	A		A	A
Approach Delay (s)	13.2		9.4			2.6
Approach LOS	B		A			A

Intersection Summary

HCM Average Control Delay	6.4	HCM Level of Service	A
HCM Volume to Capacity ratio	0.28		
Actuated Cycle Length (s)	52.5	Sum of lost time (s)	6.0
Intersection Capacity Utilization	37.1%	ICU Level of Service	A
Analysis Period (min)	15		

c Critical Lane Group

Movement	EBL	EBT	EBR	WBL	WBT	WBR	NBL	NBT	NBR	SBL	SBT	SBR
Lane Configurations												
Ideal Flow (vphpl)	1900	1900	1900	1900	1900	1900	1900	1900	1900	1900	1900	1900
Total Lost time (s)		4.0	4.0		4.0	4.0	4.0	4.0	4.0	4.0	4.0	4.0
Lane Util. Factor		1.00	1.00		1.00	1.00	1.00	0.95	1.00	1.00	0.95	1.00
Frt		1.00	0.85		1.00	0.85	1.00	1.00	0.85	1.00	1.00	0.85
Flt Protected		0.95	1.00		0.96	1.00	0.95	1.00	1.00	0.95	1.00	1.00
Satd. Flow (prot)		1778	1583		1783	1583	1770	3539	1583	1770	3539	1583
Flt Permitted		0.67	1.00		0.72	1.00	0.30	1.00	1.00	0.56	1.00	1.00
Satd. Flow (perm)		1257	1583		1335	1583	559	3539	1583	1051	3539	1583
Volume (vph)	41	2	145	71	9	38	35	293	15	9	777	39
Peak-hour factor, PHF	0.95	0.95	0.95	0.95	0.95	0.95	0.95	0.95	0.95	0.95	0.95	0.95
Adj. Flow (vph)	43	2	153	75	9	40	37	308	16	9	818	41
RTOR Reduction (vph)	0	0	132	0	0	35	0	0	5	0	0	14
Lane Group Flow (vph)	0	45	21	0	84	5	37	308	11	9	818	27
Turn Type	Perm		Perm	Perm		Perm	pm+pt		Perm	pm+pt		Perm
Protected Phases		4			8		5	2		1	6	
Permitted Phases	4		4	8		8	2		2	6		6
Actuated Green, G (s)		9.3	9.3		9.3	9.3	61.9	58.7	58.7	57.5	56.5	56.5
Effective Green, g (s)		12.3	12.3		12.3	12.3	67.9	61.7	61.7	63.5	59.5	59.5
Actuated g/C Ratio		0.14	0.14		0.14	0.14	0.75	0.69	0.69	0.71	0.66	0.66
Clearance Time (s)		7.0	7.0		7.0	7.0	7.0	7.0	7.0	7.0	7.0	7.0
Vehicle Extension (s)		2.0	2.0		2.0	2.0	2.0	2.0	2.0	2.0	2.0	2.0
Lane Grp Cap (vph)		172	216		182	216	505	2426	1085	773	2340	1047
v/s Ratio Prot							c0.01	0.09		0.00	c0.23	
v/s Ratio Perm		0.04	0.01		c0.06	0.00	0.05		0.01	0.01		0.02
v/c Ratio		0.26	0.10		0.46	0.03	0.07	0.13	0.01	0.01	0.35	0.03
Uniform Delay, d1		34.8	34.0		35.8	33.7	3.1	4.9	4.5	3.9	6.7	5.3
Progression Factor		1.00	1.00		1.00	1.00	1.00	1.00	1.00	1.00	1.00	1.00
Incremental Delay, d2		0.3	0.1		0.7	0.0	0.0	0.1	0.0	0.0	0.4	0.0
Delay (s)		35.1	34.1		36.5	33.7	3.2	5.0	4.5	3.9	7.1	5.3
Level of Service		D	C		D	C	A	A	A	A	A	A
Approach Delay (s)		34.3			35.6			4.8			7.0	
Approach LOS		C			D			A			A	

Intersection Summary

HCM Average Control Delay	12.3	HCM Level of Service	B
HCM Volume to Capacity ratio	0.36		
Actuated Cycle Length (s)	90.0	Sum of lost time (s)	16.0
Intersection Capacity Utilization	45.9%	ICU Level of Service	A
Analysis Period (min)	15		

c Critical Lane Group

Movement	EBL	EBT	EBR	WBL	WBT	WBR	NBL	NBT	NBR	SBL	SBT	SBR
Lane Configurations												
Ideal Flow (vphpl)	1900	1900	1900	1900	1900	1900	1900	1900	1900	1900	1900	1900
Total Lost time (s)	3.0	3.0	3.0	3.0	3.0	3.0	3.0	3.0	3.0	3.0	3.0	3.0
Lane Util. Factor	1.00	0.95	1.00	0.97	0.95	1.00	0.97	0.95	1.00	0.97	0.95	1.00
Frt	1.00	1.00	0.85	1.00	1.00	0.85	1.00	1.00	0.85	1.00	1.00	0.85
Flt Protected	0.95	1.00	1.00	0.95	1.00	1.00	0.95	1.00	1.00	0.95	1.00	1.00
Satd. Flow (prot)	1770	3539	1583	3433	3539	1583	3433	3539	1583	3433	3539	1583
Flt Permitted	0.95	1.00	1.00	0.95	1.00	1.00	0.95	1.00	1.00	0.95	1.00	1.00
Satd. Flow (perm)	1770	3539	1583	3433	3539	1583	3433	3539	1583	3433	3539	1583
Volume (vph)	331	707	220	205	282	157	116	770	296	318	491	81
Peak-hour factor, PHF	0.95	0.95	0.95	0.95	0.95	0.95	0.95	0.95	0.95	0.95	0.95	0.95
Adj. Flow (vph)	348	744	232	216	297	165	122	811	312	335	517	85
RTOR Reduction (vph)	0	0	0	0	0	0	0	0	0	0	0	0
Lane Group Flow (vph)	348	744	232	216	297	165	122	811	312	335	517	85
Turn Type	Prot		Free	Prot		Free	Prot		Free	Prot		Free
Protected Phases	7	4		3	8		5	2		1	6	
Permitted Phases			Free			Free			Free			Free
Actuated Green, G (s)	29.2	36.4	127.4	10.6	17.8	127.4	8.2	36.6	127.4	15.8	44.2	127.4
Effective Green, g (s)	33.2	40.4	127.4	14.6	21.8	127.4	12.2	40.6	127.4	19.8	48.2	127.4
Actuated g/C Ratio	0.26	0.32	1.00	0.11	0.17	1.00	0.10	0.32	1.00	0.16	0.38	1.00
Clearance Time (s)	7.0	7.0		7.0	7.0		7.0	7.0		7.0	7.0	
Vehicle Extension (s)	3.0	3.0		3.0	3.0		3.0	5.0		3.0	5.0	
Lane Grp Cap (vph)	461	1122	1583	393	606	1583	329	1128	1583	534	1339	1583
v/s Ratio Prot	c0.20	c0.21		0.06	0.08		0.04	c0.23		c0.10	0.15	
v/s Ratio Perm			0.15			0.10			0.20			0.05
v/c Ratio	0.75	0.66	0.15	0.55	0.49	0.10	0.37	0.72	0.20	0.63	0.39	0.05
Uniform Delay, d1	43.4	37.6	0.0	53.3	47.8	0.0	54.0	38.4	0.0	50.3	28.8	0.0
Progression Factor	1.00	1.00	1.00	1.00	1.00	1.00	1.00	1.00	1.00	1.00	1.00	1.00
Incremental Delay, d2	6.9	1.5	0.2	1.6	0.6	0.1	0.7	2.8	0.3	2.3	0.4	0.1
Delay (s)	50.3	39.1	0.2	54.9	48.4	0.1	54.7	41.1	0.3	52.7	29.2	0.1
Level of Service	D	D	A	D	D	A	D	D	A	D	C	A
Approach Delay (s)		35.2			38.7			32.2			35.0	
Approach LOS		D			D			C			C	

Intersection Summary			
HCM Average Control Delay	34.8	HCM Level of Service	C
HCM Volume to Capacity ratio	0.70		
Actuated Cycle Length (s)	127.4	Sum of lost time (s)	9.0
Intersection Capacity Utilization	74.5%	ICU Level of Service	D
Analysis Period (min)	15		

c Critical Lane Group

Movement	EBL	EBT	EBR	WBL	WBT	WBR	NBL	NBT	NBR	SBL	SBT	SBR
Lane Configurations												
Ideal Flow (vphpl)	1900	1900	1900	1900	1900	1900	1900	1900	1900	1900	1900	1900
Total Lost time (s)	4.0	4.0	4.0	4.0	4.0	4.0	4.0	4.0	4.0	4.0	4.0	4.0
Lane Util. Factor	0.97	0.95	1.00	0.97	0.95	1.00	1.00	0.91	1.00	0.97	0.91	1.00
Frt	1.00	1.00	0.85	1.00	1.00	0.85	1.00	1.00	0.85	1.00	1.00	0.85
Flt Protected	0.95	1.00	1.00	0.95	1.00	1.00	0.95	1.00	1.00	0.95	1.00	1.00
Satd. Flow (prot)	3433	3539	1583	3433	3539	1583	1770	5085	1583	3433	5085	1583
Flt Permitted	0.95	1.00	1.00	0.95	1.00	1.00	0.95	1.00	1.00	0.95	1.00	1.00
Satd. Flow (perm)	3433	3539	1583	3433	3539	1583	1770	5085	1583	3433	5085	1583
Volume (vph)	110	333	62	113	197	656	48	1557	15	260	1205	103
Peak-hour factor, PHF	0.95	0.95	0.95	0.95	0.95	0.95	0.95	0.95	0.95	0.95	0.95	0.95
Adj. Flow (vph)	116	351	65	119	207	691	51	1639	16	274	1268	108
RTOR Reduction (vph)	0	0	47	0	0	5	0	0	9	0	0	38
Lane Group Flow (vph)	116	351	18	119	207	686	51	1639	7	274	1268	70
Turn Type	Prot		pm+ov	Prot		pm+ov	Prot		pm+ov	Prot		pm+ov
Protected Phases	7	4	5	3	8	1	5	2	3	1	6	7
Permitted Phases			4			8			2			6
Actuated Green, G (s)	4.0	13.6	19.0	4.0	15.6	48.4	5.4	39.9	43.9	32.8	65.3	69.3
Effective Green, g (s)	7.0	16.6	25.0	7.0	16.6	50.4	8.4	42.9	49.9	33.8	68.3	75.3
Actuated g/C Ratio	0.06	0.14	0.21	0.06	0.14	0.43	0.07	0.37	0.43	0.29	0.59	0.65
Clearance Time (s)	7.0	7.0	7.0	7.0	5.0	5.0	7.0	7.0	7.0	5.0	7.0	7.0
Vehicle Extension (s)	2.0	4.0	2.0	2.0	2.0	2.0	2.0	3.0	2.0	2.0	3.0	2.0
Lane Grp Cap (vph)	207	505	395	207	505	740	128	1876	734	998	2986	1079
v/s Ratio Prot	0.03	0.10	0.00	c0.03	0.06	c0.27	0.03	c0.32	0.00	0.08	0.25	0.00
v/s Ratio Perm			0.01			0.16			0.00			0.04
v/c Ratio	0.56	0.70	0.05	0.57	0.41	0.93	0.40	0.87	0.01	0.27	0.42	0.06
Uniform Delay, d1	53.2	47.4	36.2	53.2	45.4	31.2	51.5	34.2	19.0	31.8	13.2	7.5
Progression Factor	1.00	1.00	1.00	1.00	1.00	1.00	1.00	1.00	1.00	1.00	1.00	1.00
Incremental Delay, d2	2.1	4.5	0.0	2.4	0.2	17.3	0.7	4.8	0.0	0.1	0.1	0.0
Delay (s)	55.2	51.9	36.2	55.6	45.6	48.5	52.3	39.0	19.0	31.9	13.3	7.6
Level of Service	E	D	D	E	D	D	D	D	B	C	B	A
Approach Delay (s)		50.7			48.7			39.2			16.0	
Approach LOS		D			D			D			B	

Intersection Summary			
HCM Average Control Delay	34.6	HCM Level of Service	C
HCM Volume to Capacity ratio	0.88		
Actuated Cycle Length (s)	116.3	Sum of lost time (s)	12.0
Intersection Capacity Utilization	84.0%	ICU Level of Service	E
Analysis Period (min)	15		

c Critical Lane Group

HCM Signalized Intersection Capacity Analysis
13: Nokes Blvd & Atlantic Blvd

Kincora
Total Future 2025

Movement	EBL	EBT	EBR	WBL	WBT	WBR	NBL	NBT	NBR	SBL	SBT	SBR
Lane Configurations												
Ideal Flow (vphpl)	1900	1900	1900	1900	1900	1900	1900	1900	1900	1900	1900	1900
Total Lost time (s)	4.0	4.0	4.0	3.0	4.0	3.0	4.0	3.0	3.0	3.0	3.0	4.0
Lane Util. Factor	0.97	0.95	1.00	0.97	0.95	1.00	0.97	0.95	1.00	0.97	0.95	1.00
Frt	1.00	1.00	0.85	1.00	1.00	0.85	1.00	1.00	0.85	1.00	1.00	0.85
Flt Protected	0.95	1.00	1.00	0.95	1.00	1.00	0.95	1.00	1.00	0.95	1.00	1.00
Satd. Flow (prot)	3433	3539	1583	3433	3539	1583	3433	3539	1583	3433	3539	1583
Flt Permitted	0.95	1.00	1.00	0.95	1.00	1.00	0.95	1.00	1.00	0.95	1.00	1.00
Satd. Flow (perm)	3433	3539	1583	3433	3539	1583	3433	3539	1583	3433	3539	1583
Volume (vph)	483	349	469	121	651	65	378	86	112	39	178	164
Peak-hour factor, PHF	0.95	0.95	0.95	0.95	0.95	0.95	0.95	0.95	0.95	0.95	0.95	0.95
Adj. Flow (vph)	508	367	494	127	685	68	398	91	118	41	187	173
RTOR Reduction (vph)	0	0	0	0	0	0	0	0	75	0	0	0
Lane Group Flow (vph)	508	367	494	127	685	68	398	91	43	41	187	173
Turn Type	Prot		Free	Prot		Free	Prot		pm+ov	Prot		Free
Protected Phases	1	6		5	2		7	4	5	3	8	
Permitted Phases			Free			Free			4			Free
Actuated Green, G (s)	16.9	39.4	100.0	8.1	28.6	100.0	15.7	20.9	29.0	4.1	9.3	100.0
Effective Green, g (s)	21.9	42.4	100.0	12.1	31.6	100.0	18.7	24.4	36.5	8.1	12.8	100.0
Actuated g/C Ratio	0.22	0.42	1.00	0.12	0.32	1.00	0.19	0.24	0.36	0.08	0.13	1.00
Clearance Time (s)	7.0	7.0		7.0	7.0		7.0	6.5	7.0	7.0	6.5	
Vehicle Extension (s)	2.5	4.0		2.5	4.0		2.5	2.5	2.5	2.5	2.5	
Lane Grp Cap (vph)	752	1501	1583	415	1118	1583	642	864	625	278	453	1583
v/s Ratio Prot	c0.15	0.10		0.04	c0.19		c0.12	0.03	0.01	0.01	c0.05	
v/s Ratio Perm			0.31			0.04			0.02			0.11
v/c Ratio	0.68	0.24	0.31	0.31	0.61	0.04	0.62	0.11	0.07	0.15	0.41	0.11
Uniform Delay, d1	35.8	18.5	0.0	40.1	29.0	0.0	37.4	29.3	20.7	42.7	40.1	0.0
Progression Factor	1.00	1.00	1.00	1.00	1.00	1.00	1.00	1.00	1.00	1.00	1.00	1.00
Incremental Delay, d2	2.2	0.4	0.5	0.3	2.5	0.1	1.5	0.0	0.0	0.2	0.4	0.1
Delay (s)	38.0	18.9	0.5	40.4	31.5	0.1	38.9	29.4	20.7	42.9	40.6	0.1
Level of Service	D	B	A	D	C	A	D	C	C	D	D	A
Approach Delay (s)		19.3			30.4			33.9			23.4	
Approach LOS		B			C			C			C	

Intersection Summary			
HCM Average Control Delay	25.5	HCM Level of Service	C
HCM Volume to Capacity ratio	0.60		
Actuated Cycle Length (s)	100.0	Sum of lost time (s)	15.0
Intersection Capacity Utilization	60.8%	ICU Level of Service	B
Analysis Period (min)	15		

c Critical Lane Group

HCM Signalized Intersection Capacity Analysis
14: Nokes Blvd. & Cascades Parkway

Kincora
Total Future 2025

Movement	EBL	EBT	EBR	WBL	WBT	WBR	NBL	NBT	NBR	SBL	SBT	SBR
Lane Configurations												
Ideal Flow (vphpl)	1900	1900	1900	1900	1900	1900	1900	1900	1900	1900	1900	1900
Total Lost time (s)	3.0	3.0	3.0	3.0	3.0	3.0	3.0	3.0	3.0	3.0	3.0	3.0
Lane Util. Factor	0.97	0.95	1.00	0.97	0.95	1.00	0.97	0.95	1.00	1.00	0.95	1.00
Frt	1.00	1.00	0.85	1.00	1.00	0.85	1.00	1.00	0.85	1.00	1.00	0.85
Flt Protected	0.95	1.00	1.00	0.95	1.00	1.00	0.95	1.00	1.00	0.95	1.00	1.00
Satd. Flow (prot)	3433	3539	1583	3433	3539	1583	3433	3539	1583	1770	3539	1583
Flt Permitted	0.95	1.00	1.00	0.62	1.00	1.00	0.95	1.00	1.00	0.95	1.00	1.00
Satd. Flow (perm)	3433	3539	1583	2235	3539	1583	3433	3539	1583	1770	3539	1583
Volume (vph)	72	119	79	190	602	18	161	702	220	4	765	116
Peak-hour factor, PHF	0.95	0.95	0.95	0.95	0.95	0.95	0.95	0.95	0.95	0.95	0.95	0.95
Adj. Flow (vph)	76	125	83	200	634	19	169	739	232	4	805	122
RTOR Reduction (vph)	0	0	61	0	0	14	0	0	124	0	0	75
Lane Group Flow (vph)	76	125	22	200	634	5	169	739	108	4	805	47
Turn Type	Prot		Perm	pm+pt		Perm	Prot		Perm	Prot		Perm
Protected Phases	7	4		3	8		1	6		5	2	
Permitted Phases			4	8		8			6			2
Actuated Green, G (s)	7.7	24.2	24.2	36.7	26.6	26.6	10.1	46.7	46.7	1.8	38.4	38.4
Effective Green, g (s)	11.7	29.2	29.2	45.7	31.8	31.6	14.1	51.2	51.2	5.8	42.9	42.9
Actuated g/C Ratio	0.10	0.26	0.26	0.41	0.28	0.28	0.13	0.46	0.46	0.05	0.38	0.38
Clearance Time (s)	7.0	8.0	8.0	7.0	8.0	8.0	7.0	7.5	7.5	7.0	7.5	7.5
Vehicle Extension (s)	3.0	3.0	3.0	3.0	3.0	3.0	3.0	3.0	3.0	3.0	3.0	3.0
Lane Grp Cap (vph)	358	920	412	1080	996	445	431	1614	722	91	1352	605
v/s Ratio Prot	c0.02	0.04		c0.02	c0.18		c0.05	0.21		0.00	c0.23	
v/s Ratio Perm			0.01	0.05		0.00			0.07			0.03
v/c Ratio	0.21	0.14	0.05	0.19	0.64	0.01	0.39	0.46	0.15	0.04	0.60	0.08
Uniform Delay, d1	46.1	31.9	31.2	21.0	35.3	29.1	45.2	21.0	17.8	50.6	27.8	22.1
Progression Factor	1.00	1.00	1.00	1.00	1.00	1.00	1.00	1.00	1.00	1.00	1.00	1.00
Incremental Delay, d2	0.3	0.1	0.1	0.1	1.3	0.0	0.6	0.2	0.1	0.2	0.7	0.1
Delay (s)	46.4	31.9	31.2	21.1	36.7	29.1	45.7	21.2	17.9	50.8	28.5	22.1
Level of Service	D	C	C	C	D	C	D	C	B	D	C	C
Approach Delay (s)		35.6			32.8			24.2			27.7	
Approach LOS		D			C			C			C	

Intersection Summary			
HCM Average Control Delay	28.5	HCM Level of Service	C
HCM Volume to Capacity ratio	0.54		
Actuated Cycle Length (s)	112.3	Sum of lost time (s)	12.0
Intersection Capacity Utilization	71.6%	ICU Level of Service	C
Analysis Period (min)	15		

c Critical Lane Group

Movement	EBL	EBR	NBL	NBT	SBT	SBR
Lane Configurations						
Ideal Flow (vphpl)	1900	1900	1900	1900	1900	1900
Total Lost time (s)	3.0	3.0	3.0	3.0	3.0	3.0
Lane Util. Factor	1.00	1.00	1.00	0.95	0.95	1.00
Frt	1.00	0.85	1.00	1.00	1.00	0.85
Flt Protected	0.95	1.00	0.95	1.00	1.00	1.00
Satd. Flow (prot)	1770	1583	1770	3539	3539	1583
Flt Permitted	0.95	1.00	0.22	1.00	1.00	1.00
Satd. Flow (perm)	1770	1583	401	3539	3539	1583
Volume (vph)	97	54	172	1133	863	142
Peak-hour factor, PHF	0.95	0.95	0.95	0.95	0.95	0.95
Adj. Flow (vph)	102	57	181	1193	908	149
RTOR Reduction (vph)	0	47	0	0	0	46
Lane Group Flow (vph)	102	10	181	1193	908	103
Turn Type		Perm	pm+pt			pm+ov
Protected Phases	4		1	6	2	4
Permitted Phases		4	6			2
Actuated Green, G (s)	7.9	7.9	45.2	45.2	30.7	38.6
Effective Green, g (s)	11.9	11.9	48.7	48.7	34.2	46.1
Actuated g/C Ratio	0.13	0.13	0.73	0.73	0.51	0.69
Clearance Time (s)	7.0	7.0	7.0	6.5	6.5	7.0
Vehicle Extension (s)	3.0	3.0	4.0	4.0	4.0	3.0
Lane Grp Cap (vph)	316	283	530	2588	1817	1167
v/s Ratio Prot	c0.06		0.06	c0.34	c0.26	0.02
v/s Ratio Perm		0.01	0.19			0.05
v/c Ratio	0.32	0.04	0.34	0.46	0.50	0.09
Uniform Delay, d1	23.8	22.6	4.2	3.6	10.6	3.4
Progression Factor	1.00	1.00	1.00	1.00	1.00	1.00
Incremental Delay, d2	0.6	0.1	0.5	0.2	0.3	0.0
Delay (s)	24.4	22.7	4.7	3.8	10.9	3.4
Level of Service	C	C	A	A	B	A
Approach Delay (s)	23.8			3.9	9.8	
Approach LOS	C			A	A	

Intersection Summary			
HCM Average Control Delay	7.6	HCM Level of Service	A
HCM Volume to Capacity ratio	0.46		
Actuated Cycle Length (s)	66.6	Sum of lost time (s)	9.0
Intersection Capacity Utilization	48.8%	ICU Level of Service	A
Analysis Period (min)	15		
c Critical Lane Group			

Movement	EBL	EBT	EBR	WBL	WBT	WBR	NBL	NBT	NBR	SBL	SBT	SBR
Lane Configurations												
Ideal Flow (vphpl)	1900	1900	1900	1900	1900	1900	1900	1900	1900	1900	1900	1900
Lane Width	12	12	12	12	12	13	12	12	12	12	12	12
Total Lost time (s)	3.0	3.0	3.0	3.0	3.0	3.0	3.0	3.0	3.0	3.0	3.0	3.0
Lane Util. Factor	0.97	0.86	1.00	0.97	0.86	1.00	0.97	0.95	1.00	0.97	0.95	1.00
Frt	1.00	1.00	0.85	1.00	1.00	0.85	1.00	1.00	0.85	1.00	1.00	0.85
Flt Protected	0.95	1.00	1.00	0.95	1.00	1.00	0.95	1.00	1.00	0.95	1.00	1.00
Satd. Flow (prot)	3433	6408	1583	3433	6408	1636	3433	3539	1583	3433	3539	1583
Flt Permitted	0.95	1.00	1.00	0.95	1.00	1.00	0.95	1.00	1.00	0.95	1.00	1.00
Satd. Flow (perm)	3433	6408	1583	3433	6408	1636	3433	3539	1583	3433	3539	1583
Volume (vph)	258	2150	252	103	658	566	62	227	110	805	535	432
Peak-hour factor, PHF	0.95	0.95	0.95	0.95	0.95	0.95	0.95	0.95	0.95	0.95	0.95	0.95
Adj. Flow (vph)	272	2263	265	108	693	596	65	239	116	847	563	455
RTOR Reduction (vph)	0	0	0	0	0	0	0	0	5	0	0	36
Lane Group Flow (vph)	272	2263	265	108	693	596	65	239	111	847	563	419
Turn Type	Prot		Free	Prot		Free	Prot		pm+ov	Prot		pm+ov
Protected Phases	1	6		5	2		3	8	5	7	4	1
Permitted Phases			Free			Free			8			4
Actuated Green, G (s)	16.0	58.9	145.5	9.2	52.1	145.5	4.0	15.2	24.4	34.7	45.9	61.9
Effective Green, g (s)	20.0	62.9	145.5	13.2	56.1	145.5	8.0	18.7	31.9	38.7	49.4	69.4
Actuated g/C Ratio	0.14	0.43	1.00	0.09	0.39	1.00	0.05	0.13	0.22	0.27	0.34	0.48
Clearance Time (s)	7.0	7.0		7.0	7.0		7.0	6.5	7.0	7.0	6.5	7.0
Vehicle Extension (s)	2.0	3.0		2.0	3.0		2.0	2.0	2.0	2.0	2.0	2.0
Lane Grp Cap (vph)	472	2770	1583	311	2471	1636	189	455	380	913	1202	788
v/s Ratio Prot	c0.08	c0.35		0.03	0.11		0.02	0.07	0.03	c0.25	0.16	c0.07
v/s Ratio Perm			0.17			0.36			0.04			0.19
v/c Ratio	0.58	0.82	0.17	0.35	0.28	0.36	0.34	0.53	0.29	0.93	0.47	0.53
Uniform Delay, d1	58.8	36.2	0.0	62.1	30.8	0.0	66.2	59.3	47.4	52.0	37.7	28.7
Progression Factor	1.00	1.00	1.00	1.00	1.00	1.00	1.00	1.00	1.00	1.00	1.00	1.00
Incremental Delay, d2	1.1	2.8	0.2	0.2	0.3	0.6	0.4	0.5	0.2	14.9	0.1	0.3
Delay (s)	59.8	39.1	0.2	62.4	31.1	0.6	66.6	59.8	47.5	66.9	37.8	27.0
Level of Service	E	D	A	E	C	A	E	E	D	E	D	C
Approach Delay (s)		37.4			20.5			57.4			48.4	
Approach LOS		D			C			E			D	

Intersection Summary			
HCM Average Control Delay	38.2	HCM Level of Service	D
HCM Volume to Capacity ratio	0.75		
Actuated Cycle Length (s)	145.5	Sum of lost time (s)	3.0
Intersection Capacity Utilization	77.9%	ICU Level of Service	D
Analysis Period (min)	15		
c Critical Lane Group			

HCM Signalized Intersection Capacity Analysis
19: Farmwell Road & Smith Switch Road

Kincora
Total Future 2025

Movement	EBL	EBT	EBR	WBL	WBT	WBR	NBL	NBT	NBR	SBL	SBT	SBR
Lane Configurations												
Ideal Flow (vphpl)	1900	1900	1900	1900	1900	1900	1900	1900	1900	1900	1900	1900
Total Lost time (s)	3.0	3.0	3.0	3.0	3.0	3.0	3.0	3.0	3.0	3.0	3.0	3.0
Lane Util. Factor	1.00	0.86	1.00	1.00	0.86	1.00	1.00	0.95	1.00	1.00	0.95	1.00
Frt	1.00	1.00	0.85	1.00	1.00	0.85	1.00	1.00	0.85	1.00	1.00	0.85
Flt Protected	0.95	1.00	1.00	0.95	1.00	1.00	0.95	1.00	1.00	0.95	1.00	1.00
Satd. Flow (prot)	1770	6408	1583	1770	6408	1583	1770	3539	1583	1770	3539	1583
Flt Permitted	0.95	1.00	1.00	0.95	1.00	1.00	0.75	1.00	1.00	0.55	1.00	1.00
Satd. Flow (perm)	1770	6408	1583	1770	6408	1583	1392	3539	1583	1022	3539	1583
Volume (vph)	125	3008	58	283	1170	186	91	63	272	104	14	28
Peak-hour factor, PHF	0.95	0.95	0.95	0.95	0.95	0.95	0.95	0.95	0.95	0.95	0.95	0.95
Adj. Flow (vph)	132	3166	61	298	1232	196	96	66	286	109	15	29
RTOR Reduction (vph)	0	0	26	0	0	63	0	0	0	0	0	22
Lane Group Flow (vph)	132	3166	35	298	1232	133	96	66	286	109	15	7
Turn Type	Prot		pm+ov	Prot		pm+ov	pm+pt		Free	pm+pt		pm+ov
Protected Phases	1	6	3	5	2	7	3	8		7	4	1
Permitted Phases			6			2	8		Free	4		4
Actuated Green, G (s)	10.2	54.5	58.5	18.7	62.5	69.2	9.6	5.6	110.0	15.0	8.3	18.5
Effective Green, g (s)	14.2	58.0	64.0	22.2	66.0	74.7	15.1	9.1	110.0	20.5	11.8	26.0
Actuated g/C Ratio	0.13	0.53	0.58	0.20	0.60	0.68	0.14	0.08	1.00	0.19	0.11	0.24
Clearance Time (s)	7.0	6.5	5.0	6.5	6.5	5.0	5.0	6.5		5.0	6.5	7.0
Vehicle Extension (s)	2.0	3.0	2.0	2.0	3.0	2.0	2.0	2.0		2.0	2.0	2.0
Lane Grp Cap (vph)	228	3379	964	357	3845	1118	212	293	1583	250	380	417
v/s Ratio Prot	0.07	c0.49	0.00	c0.17	0.19	0.01	0.02	0.02		c0.03	0.00	0.00
v/s Ratio Perm			0.02			0.07	0.04		0.18	c0.05		0.00
v/c Ratio	0.58	0.94	0.04	0.83	0.32	0.12	0.45	0.23	0.18	0.44	0.04	0.02
Uniform Delay, d1	45.1	24.3	9.8	42.1	10.9	6.2	43.3	47.2	0.0	38.8	44.0	32.2
Progression Factor	1.00	1.00	1.00	1.00	1.00	1.00	1.00	1.00	1.00	1.00	1.00	1.00
Incremental Delay, d2	2.2	6.5	0.0	14.7	0.2	0.0	0.6	0.1	0.3	0.4	0.2	0.0
Delay (s)	47.3	30.7	9.8	56.9	11.1	6.2	43.8	47.3	0.3	39.3	44.2	32.2
Level of Service	D	C	A	E	B	A	D	D	A	D	D	C
Approach Delay (s)		31.0			18.5			16.5			38.4	
Approach LOS		C			B			B			D	

Intersection Summary			
HCM Average Control Delay	26.3	HCM Level of Service	C
HCM Volume to Capacity ratio	0.83		
Actuated Cycle Length (s)	110.0	Sum of lost time (s)	12.0
Intersection Capacity Utilization	81.7%	ICU Level of Service	D
Analysis Period (min)	15		

c Critical Lane Group

HCM Signalized Intersection Capacity Analysis
21: Waxpool Road & Pacific Boulevard

Kincora
Total Future 2025

Movement	EBL	EBT	EBR	WBL	WBT	WBR	NBL	NBT	NBR	SBL	SBT	SBR
Lane Configurations												
Ideal Flow (vphpl)	1900	1900	1900	1900	1900	1900	1900	1900	1900	1900	1900	1900
Total Lost time (s)	3.0	3.0	3.0	3.0	3.0	3.0	3.0	3.0	3.0	3.0	3.0	3.0
Lane Util. Factor	0.94	0.86	1.00	0.97	0.86	1.00	0.97	0.95	1.00	0.97	0.95	1.00
Frt	1.00	1.00	0.85	1.00	1.00	0.85	1.00	1.00	0.85	1.00	1.00	0.85
Flt Protected	0.95	1.00	1.00	0.95	1.00	1.00	0.95	1.00	1.00	0.95	1.00	1.00
Satd. Flow (prot)	4990	6408	1583	3433	6408	1583	3433	3539	1583	3433	3539	1583
Flt Permitted	0.95	1.00	1.00	0.95	1.00	1.00	0.95	1.00	1.00	0.95	1.00	1.00
Satd. Flow (perm)	4990	6408	1583	3433	6408	1583	3433	3539	1583	3433	3539	1583
Volume (vph)	1534	3878	237	438	2888	368	262	234	105	180	114	423
Peak-hour factor, PHF	0.95	0.95	0.95	0.95	0.95	0.95	0.95	0.95	0.95	0.95	0.95	0.95
Adj. Flow (vph)	1615	4082	249	461	3040	387	276	246	111	189	120	445
RTOR Reduction (vph)	0	0	0	0	0	0	0	0	0	0	0	0
Lane Group Flow (vph)	1615	4082	249	461	3040	387	276	246	111	189	120	445
Turn Type	Prot		Free	Prot		Free	Prot		Free	Prot		Free
Protected Phases	1	6		5	2		7	4		3	8	
Permitted Phases			Free			Free			Free			Free
Actuated Green, G (s)	39.5	88.5	145.0	16.0	65.0	145.0	7.5	8.0	145.0	4.5	5.0	145.0
Effective Green, g (s)	43.5	92.5	145.0	20.0	69.0	145.0	11.5	12.0	145.0	8.5	9.0	145.0
Actuated g/C Ratio	0.30	0.64	1.00	0.14	0.48	1.00	0.08	0.08	1.00	0.06	0.06	1.00
Clearance Time (s)	7.0	7.0		7.0	7.0		7.0	7.0		7.0	7.0	
Vehicle Extension (s)	2.0	3.0		2.0	3.0		3.0	3.0		3.0	3.0	
Lane Grp Cap (vph)	1497	4088	1583	474	3049	1583	272	293	1583	201	220	1583
v/s Ratio Prot	c0.32	c0.64		0.13	0.47		c0.08	c0.07		0.06	0.03	
v/s Ratio Perm			0.16			0.24			0.07			c0.28
v/c Ratio	1.08	1.00	0.16	0.97	1.00	0.24	1.01	0.84	0.07	0.94	0.55	0.28
Uniform Delay, d1	50.8	26.2	0.0	62.2	37.9	0.0	66.8	65.6	0.0	68.0	66.0	0.0
Progression Factor	1.00	1.00	1.00	1.00	1.00	1.00	1.00	1.00	1.00	1.00	1.00	1.00
Incremental Delay, d2	47.7	13.7	0.2	34.0	15.6	0.4	58.4	18.6	0.1	46.6	2.8	0.4
Delay (s)	98.5	39.9	0.2	96.2	53.5	0.4	125.1	84.2	0.1	114.6	68.8	0.4
Level of Service	F	D	A	F	D	A	F	F	A	F	E	A
Approach Delay (s)		54.2			53.3			87.3			39.9	
Approach LOS		D			D			F			D	

Intersection Summary			
HCM Average Control Delay	54.8	HCM Level of Service	D
HCM Volume to Capacity ratio	0.99		
Actuated Cycle Length (s)	145.0	Sum of lost time (s)	6.0
Intersection Capacity Utilization	96.0%	ICU Level of Service	F
Analysis Period (min)	15		

c Critical Lane Group

Movement	EBL	EBT	EBR	WBL	WBT	WBR	NBL	NBT	NBR	SBL	SBT	SBR
Lane Configurations												
Ideal Flow (vphpl)	1900	1900	1900	1900	1900	1900	1900	1900	1900	1900	1900	1900
Total Lost time (s)	3.0	3.0		3.0	3.0			3.0	3.0		3.0	
Lane Util. Factor	1.00	0.95		1.00	0.95			1.00	1.00		1.00	
Frt	1.00	0.98		1.00	1.00			1.00	0.85		0.91	
Flt Protected	0.95	1.00		0.95	1.00			0.95	1.00		0.99	
Satd. Flow (prot)	1770	3463		1770	3537			1776	1583		1676	
Flt Permitted	0.17	1.00		0.10	1.00			0.72	1.00		0.95	
Satd. Flow (perm)	318	3463		193	3537			1332	1583		1599	
Volume (vph)	24	1124	188	218	1434	7	118	3	144	4	3	14
Peak-hour factor, PHF	0.95	0.95	0.95	0.95	0.95	0.95	0.95	0.95	0.95	0.95	0.95	0.95
Adj. Flow (vph)	25	1183	198	229	1509	7	124	3	152	4	3	15
RTOR Reduction (vph)	0	9	0	0	0	0	0	0	0	0	13	0
Lane Group Flow (vph)	25	1372	0	229	1516	0	0	127	152	0	9	0
Turn Type	Perm			pm+pt			Perm		pm+ov	Perm		
Protected Phases		6		5	2			4	5		8	
Permitted Phases	6			2			4		4	8		
Actuated Green, G (s)	45.6	45.6		61.9	61.9			10.6	21.4		10.6	
Effective Green, g (s)	48.6	48.6		64.9	64.9			13.6	26.9		13.6	
Actuated g/C Ratio	0.58	0.58		0.77	0.77			0.16	0.32		0.16	
Clearance Time (s)	6.0	6.0		5.5	6.0			6.0	5.5		6.0	
Vehicle Extension (s)	4.0	4.0		2.0	4.0			3.0	2.0		3.0	
Lane Grp Cap (vph)	183	1992		396	2717			214	560		257	
v/s Ratio Prot		c0.40		c0.09	0.43				0.04			
v/s Ratio Perm	0.08			0.35				c0.10	0.05		0.01	
v/c Ratio	0.14	0.69		0.58	0.56			0.59	0.27		0.04	
Uniform Delay, d1	8.3	12.6		13.6	4.0			32.9	21.5		29.9	
Progression Factor	1.00	1.00		1.00	1.00			1.00	1.00		1.00	
Incremental Delay, d2	0.5	1.1		1.3	0.3			4.4	0.1		0.1	
Delay (s)	8.7	13.7		14.9	4.3			37.3	21.6		30.0	
Level of Service	A	B		B	A			D	C		C	
Approach Delay (s)		13.6			5.7			28.7			30.0	
Approach LOS		B			A			C			C	

Intersection Summary			
HCM Average Control Delay	10.9	HCM Level of Service	B
HCM Volume to Capacity ratio	0.65		
Actuated Cycle Length (s)	84.5	Sum of lost time (s)	9.0
Intersection Capacity Utilization	75.7%	ICU Level of Service	D
Analysis Period (min)	15		

c Critical Lane Group

Movement	EBL	EBT	WBT	WBR	SBL	SBR
Lane Configurations						
Ideal Flow (vphpl)	1900	1900	1900	1900	1900	1900
Total Lost time (s)	3.0	3.0	3.0	3.0	3.0	3.0
Lane Util. Factor	0.97	0.95	0.91	0.91	0.97	1.00
Frt	1.00	1.00	1.00	0.85	1.00	0.85
Flt Protected	0.95	1.00	1.00	1.00	0.95	1.00
Satd. Flow (prot)	3433	3539	3390	1441	3433	1583
Flt Permitted	0.95	1.00	1.00	1.00	0.95	1.00
Satd. Flow (perm)	3433	3539	3390	1441	3433	1583
Volume (vph)	758	514	624	416	329	618
Peak-hour factor, PHF	0.95	0.95	0.95	0.95	0.95	0.95
Adj. Flow (vph)	798	541	657	438	346	651
RTOR Reduction (vph)	0	0	0	15	0	449
Lane Group Flow (vph)	798	541	657	423	346	202
Turn Type	Prot		pm+ov			Perm
Protected Phases	5	2	6	4	4	
Permitted Phases				6		4
Actuated Green, G (s)	21.6	48.3	19.7	37.2	17.5	17.5
Effective Green, g (s)	25.6	52.3	23.7	45.7	22.0	22.0
Actuated g/C Ratio	0.32	0.65	0.30	0.57	0.27	0.27
Clearance Time (s)	7.0	7.0	7.0	7.5	7.5	7.5
Vehicle Extension (s)	2.0	3.0	3.0	3.0	3.0	3.0
Lane Grp Cap (vph)	1094	2305	1001	874	941	434
v/s Ratio Prot	c0.23	0.15	c0.19	c0.13	0.10	
v/s Ratio Perm				0.16		0.13
v/c Ratio	0.73	0.23	0.66	0.48	0.37	0.46
Uniform Delay, d1	24.3	5.8	24.7	10.3	23.5	24.2
Progression Factor	1.00	1.00	1.00	1.00	1.00	1.00
Incremental Delay, d2	2.1	0.1	1.6	0.4	0.2	0.8
Delay (s)	26.4	5.8	26.3	10.7	23.8	25.0
Level of Service	C	A	C	B	C	C
Approach Delay (s)		18.1	20.1		24.6	
Approach LOS		B	C		C	

Intersection Summary			
HCM Average Control Delay	20.6	HCM Level of Service	C
HCM Volume to Capacity ratio	0.62		
Actuated Cycle Length (s)	80.3	Sum of lost time (s)	6.0
Intersection Capacity Utilization	66.6%	ICU Level of Service	C
Analysis Period (min)	15		

c Critical Lane Group

HCM Signalized Intersection Capacity Analysis — Kincora
24: Pacific Boulevard & Loudoun County Parkway — Total Future 2025

Movement	EBL	EBT	EBR	WBL	WBT	WBR	NBL	NBT	NBR	SBL	SBT	SBR
Lane Configurations												
Ideal Flow (vphpl)	1900	1900	1900	1900	1900	1900	1900	1900	1900	1900	1900	1900
Total Lost time (s)	4.0		4.0	4.0		4.0	4.0	4.0	4.0	4.0	4.0	4.0
Lane Util. Factor	0.97		1.00	0.97		0.88	0.97	0.95	1.00	0.97	0.95	1.00
Frt	1.00		0.85	1.00		0.85	1.00	1.00	0.85	1.00	1.00	0.85
Flt Protected	0.95		1.00	0.95		1.00	0.95	1.00	1.00	0.95	1.00	1.00
Satd. Flow (prot)	3433		1583	3433		2787	3433	3539	1583	3433	3539	1583
Flt Permitted	0.95		1.00	0.95		1.00	0.95	1.00	1.00	0.95	1.00	1.00
Satd. Flow (perm)	3433		1583	3433		2787	3433	3539	1583	3433	3539	1583
Volume (vph)	139	0	281	27	0	324	610	1444	203	1390	1118	237
Peak-hour factor, PHF	0.95	0.95	0.95	0.95	0.95	0.95	0.95	0.95	0.95	0.95	0.95	0.95
Adj. Flow (vph)	146	0	296	28	0	341	642	1520	214	1463	1177	249
RTOR Reduction (vph)	0	0	0	0	0	0	0	0	79	0	0	81
Lane Group Flow (vph)	146	0	296	28	0	341	642	1520	135	1463	1177	168
Turn Type	Prot		Free	Prot		Free	Prot		pm+ov	Prot		pm+ov
Protected Phases	7	4		3	8		5	2	3	1	6	7
Permitted Phases			Free			Free			2			6
Actuated Green, G (s)	4.0		133.0	4.0		133.0	28.3	55.0	59.0	53.0	79.7	83.7
Effective Green, g (s)	7.0		133.0	7.0		133.0	31.3	58.0	65.0	56.0	82.7	89.7
Actuated g/C Ratio	0.05		1.00	0.05		1.00	0.24	0.44	0.49	0.42	0.62	0.67
Clearance Time (s)	7.0			7.0			7.0	7.0	7.0	7.0	7.0	7.0
Vehicle Extension (s)	2.0			2.0			2.0	3.0	2.0	2.0	3.0	2.0
Lane Grp Cap (vph)	181		1583	181		2787	808	1543	821	1445	2201	1115
v/s Ratio Prot	c0.04			0.01			0.19	c0.43	0.01	c0.43	0.33	0.01
v/s Ratio Perm			0.19			0.12			0.08			0.10
v/c Ratio	0.81		0.19	0.15		0.12	0.79	0.99	0.16	1.01	0.53	0.15
Uniform Delay, d1	62.3		0.0	60.2		0.0	47.8	37.1	18.9	38.5	14.2	7.8
Progression Factor	1.00		1.00	1.00		1.00	1.00	1.00	1.00	1.00	1.00	1.00
Incremental Delay, d2	21.3		0.3	0.1		0.1	5.1	19.3	0.0	26.8	0.3	0.0
Delay (s)	83.7		0.3	60.3		0.1	52.9	56.3	18.9	65.3	14.5	7.9
Level of Service	F		A	E		A	D	E	B	E	B	A
Approach Delay (s)		27.8			4.7			52.0			39.6	
Approach LOS		C			A			D			D	

Intersection Summary			
HCM Average Control Delay	41.5	HCM Level of Service	D
HCM Volume to Capacity ratio	0.99		
Actuated Cycle Length (s)	133.0	Sum of lost time (s)	12.0
Intersection Capacity Utilization	100.2%	ICU Level of Service	G
Analysis Period (min)	15		

c Critical Lane Group

HCM Unsignalized Intersection Capacity Analysis — Kincora
25: Pacific Boulevard & Richfield Way — Total Future 2025

Movement	EBL	EBT	EBR	WBL	WBT	WBR	NBL	NBT	NBR	SBL	SBT	SBR
Lane Configurations												
Sign Control		Free			Free			Stop			Stop	
Grade		0%			0%			0%			0%	
Volume (veh/h)	0	1143	5	0	290	0	5	0	0	0	0	0
Peak Hour Factor	0.92	0.92	0.92	0.92	0.92	0.92	0.92	0.92	0.92	0.92	0.92	0.92
Hourly flow rate (vph)	0	1242	5	0	315	0	5	0	0	0	0	0
Pedestrians												
Lane Width (ft)												
Walking Speed (ft/s)												
Percent Blockage												
Right turn flare (veh)												
Median type								None			None	
Median storage veh)												
Upstream signal (ft)												
pX, platoon unblocked												
vC, conflicting volume	315			1248			1400	1558	621	936	1563	158
vC1, stage 1 conf vol												
vC2, stage 2 conf vol												
vCu, unblocked vol	315			1248			1400	1558	621	936	1563	158
tC, single (s)	4.1			4.1			7.5	6.5	6.9	7.5	6.5	6.9
tC, 2 stage (s)												
tF (s)	2.2			2.2			3.5	4.0	3.3	3.5	4.0	3.3
p0 queue free %	100			100			95	100	100	100	100	100
cM capacity (veh/h)	1242			554			100	112	430	220	111	860

Direction, Lane #	EB 1	EB 2	EB 3	EB 4	WB 1	WB 2	WB 3	WB 4	NB 1	NB 2	SB 1	SB 2
Volume Total	0	621	621	5	0	158	158	0	5	0	0	0
Volume Left	0	0	0	0	0	0	0	0	5	0	0	0
Volume Right	0	0	0	5	0	0	0	0	0	0	0	0
cSH	1700	1700	1700	1700	1700	1700	1700	1700	100	1700	1700	1700
Volume to Capacity	0.00	0.37	0.37	0.00	0.00	0.09	0.09	0.00	0.05	0.00	0.00	0.00
Queue Length 95th (ft)	0	0	0	0	0	0	0	0	4	0	0	0
Control Delay (s)	0.0	0.0	0.0	0.0	0.0	0.0	0.0	0.0	43.0	0.0	0.0	0.0
Lane LOS									E	A	A	A
Approach Delay (s)	0.0				0.0				43.0		0.0	
Approach LOS									E		A	

Intersection Summary			
Average Delay	0.1		
Intersection Capacity Utilization	41.6%	ICU Level of Service	A
Analysis Period (min)	15		

HCM Signalized Intersection Capacity Analysis
26: Gloucester Pkwy & Pacific Boulevard

Kincora
Total Future 2025

Movement	EBL	EBT	EBR	WBL	WBT	WBR	NBL	NBT	NBR	SBL	SBT	SBR
Lane Configurations												
Ideal Flow (vphpl)	1900	1900	1900	1900	1900	1900	1900	1900	1900	1900	1900	1900
Total Lost time (s)	4.0	4.0		4.0	4.0	4.0	4.0	4.0	4.0	4.0	4.0	4.0
Lane Util. Factor	0.97	0.91		0.97	0.95	1.00	1.00	0.95	1.00	0.97	0.95	1.00
Frt	1.00	1.00		1.00	1.00	0.85	1.00	1.00	0.85	1.00	1.00	0.85
Flt Protected	0.95	1.00		0.95	1.00	1.00	0.95	1.00	1.00	0.95	1.00	1.00
Satd. Flow (prot)	3433	5082		3433	3539	1583	1770	3539	1583	3433	3539	1583
Flt Permitted	0.95	1.00		0.95	1.00	1.00	0.95	1.00	1.00	0.95	1.00	1.00
Satd. Flow (perm)	3433	5082		3433	3539	1583	1770	3539	1583	3433	3539	1583
Volume (vph)	324	193	1	697	395	1567	1	1183	103	407	417	132
Peak-hour factor, PHF	0.95	0.95	0.95	0.95	0.95	0.95	0.95	0.95	0.95	0.95	0.95	0.95
Adj. Flow (vph)	341	203	1	734	416	1649	1	1245	108	428	439	139
RTOR Reduction (vph)	0	0	0	0	0	0	0	0	42	0	0	54
Lane Group Flow (vph)	341	204	0	734	416	1649	1	1245	66	428	439	85
Turn Type	Prot			Prot		Free	Prot		pm+ov	Prot		pm+ov
Protected Phases	7	4		3	8		5	2	3	1	6	7
Permitted Phases						Free			2			6
Actuated Green, G (s)	14.7	10.5		25.8	21.6	115.0	1.4	38.7	64.5	12.0	49.3	64.0
Effective Green, g (s)	17.7	13.5		28.8	24.6	115.0	4.4	41.7	70.5	15.0	52.3	70.0
Actuated g/C Ratio	0.15	0.12		0.25	0.21	1.00	0.04	0.36	0.61	0.13	0.45	0.61
Clearance Time (s)	7.0	7.0		7.0	7.0		7.0	7.0	7.0	7.0	7.0	7.0
Vehicle Extension (s)	2.0	2.0		2.0	2.0		2.0	2.0	2.0	2.0	2.0	2.0
Lane Grp Cap (vph)	528	597		860	757	1583	68	1283	1026	448	1609	1019
v/s Ratio Prot	0.10	0.04		0.21	0.12		0.00	0.35	0.02	0.12	0.12	0.01
v/s Ratio Perm						c1.04			0.03			0.04
v/c Ratio	0.65	0.34		0.85	0.55	1.04	0.01	0.97	0.06	0.96	0.27	0.08
Uniform Delay, d1	45.7	46.7		41.1	40.3	57.5	53.2	36.0	9.0	49.7	19.5	9.3
Progression Factor	1.00	1.00		1.00	1.00	1.00	1.00	1.00	1.00	1.00	1.00	1.00
Incremental Delay, d2	2.0	0.1		7.9	0.4	34.3	0.0	18.3	0.0	30.9	0.0	0.0
Delay (s)	47.7	46.8		49.0	40.7	91.8	53.2	54.4	9.0	80.5	19.5	9.3
Level of Service	D	D		D	D	F	D	D	A	F	B	A
Approach Delay (s)		47.4			73.0			50.7			44.1	
Approach LOS		D			E			D			D	

Intersection Summary

HCM Average Control Delay	60.2	HCM Level of Service	E
HCM Volume to Capacity ratio	1.04		
Actuated Cycle Length (s)	115.0	Sum of lost time (s)	0.0
Intersection Capacity Utilization	85.9%	ICU Level of Service	E
Analysis Period (min)	15		

c Critical Lane Group

HCM Unsignalized Intersection Capacity Analysis
27: Site Drive #9 & Pacific Boulevard

Kincora
Total Future 2025

Movement	WBL	WBR	NBT	NBR	SBL	SBT
Lane Configurations						
Sign Control	Stop		Free			Free
Grade	0%		0%			0%
Volume (veh/h)	0	83	1203	455	0	1114
Peak Hour Factor	0.95	0.95	0.95	0.95	0.95	0.95
Hourly flow rate (vph)	0	87	1266	479	0	1173
Pedestrians						
Lane Width (ft)						
Walking Speed (ft/s)						
Percent Blockage						
Right turn flare (veh)						
Median type	None					
Median storage veh)						
Upstream signal (ft)			535			850
pX, platoon unblocked	0.76	0.74			0.74	
vC, conflicting volume	2092	873			1745	
vC1, stage 1 conf vol						
vC2, stage 2 conf vol						
vCu, unblocked vol	1942	471			1655	
tC, single (s)	6.8	6.9			4.1	
tC, 2 stage (s)						
tF (s)	3.5	3.3			2.2	
p0 queue free %	100	78			100	
cM capacity (veh/h)	43	398			285	

Direction, Lane #	WB 1	NB 1	NB 2	SB 1	SB 2
Volume Total	87	844	901	586	586
Volume Left	0	0	0	0	0
Volume Right	87	0	479	0	0
cSH	398	1700	1700	1700	1700
Volume to Capacity	0.22	0.50	0.53	0.34	0.34
Queue Length 95th (ft)	21	0	0	0	0
Control Delay (s)	16.6	0.0	0.0	0.0	0.0
Lane LOS	C				
Approach Delay (s)	16.6	0.0		0.0	
Approach LOS	C				

Intersection Summary

Average Delay	0.5		
Intersection Capacity Utilization	59.6%	ICU Level of Service	B
Analysis Period (min)	15		

Movement	WBL	WBR	NBT	NBR	SBL	SBT
Lane Configurations						
Ideal Flow (vphpl)	1900	1900	1900	1900	1900	1900
Total Lost time (s)	4.0		4.0			4.0
Lane Util. Factor	1.00		0.95			0.95
Frt	0.95		1.00			1.00
Flt Protected	0.97		1.00			1.00
Satd. Flow (prot)	1711		3533			3535
Flt Permitted	0.97		1.00			0.85
Satd. Flow (perm)	1711		3533			3006
Volume (vph)	36	24	1634	19	29	1085
Peak-hour factor, PHF	0.95	0.95	0.95	0.95	0.95	0.95
Adj. Flow (vph)	38	25	1720	20	31	1142
RTOR Reduction (vph)	19	0	1	0	0	0
Lane Group Flow (vph)	44	0	1739	0	0	1173
Turn Type					Perm	
Protected Phases	8		2			6
Permitted Phases					6	
Actuated Green, G (s)	8.9		67.4			67.4
Effective Green, g (s)	11.9		70.4			70.4
Actuated g/C Ratio	0.13		0.78			0.78
Clearance Time (s)	7.0		7.0			7.0
Vehicle Extension (s)	2.0		2.0			2.0
Lane Grp Cap (vph)	225		2754			2344
v/s Ratio Prot	c0.03		c0.49			
v/s Ratio Perm						0.39
v/c Ratio	0.20		0.63			0.50
Uniform Delay, d1	34.9		4.3			3.6
Progression Factor	1.00		1.00			1.00
Incremental Delay, d2	0.2		0.4			0.1
Delay (s)	35.1		4.7			3.7
Level of Service	D		A			A
Approach Delay (s)	35.1		4.7			3.7
Approach LOS	D		A			A

Intersection Summary			
HCM Average Control Delay	4.9	HCM Level of Service	A
HCM Volume to Capacity ratio	0.57		
Actuated Cycle Length (s)	90.0	Sum of lost time (s)	8.0
Intersection Capacity Utilization	65.8%	ICU Level of Service	C
Analysis Period (min)	15		
c Critical Lane Group			

Movement	WBL	WBR	NBT	NBR	SBL	SBT
Lane Configurations						
Sign Control	Stop		Free			Free
Grade	0%		0%			0%
Volume (veh/h)	0	4	3050	24	0	956
Peak Hour Factor	0.95	0.95	0.95	0.95	0.95	0.95
Hourly flow rate (vph)	0	4	3211	25	0	1006
Pedestrians						
Lane Width (ft)						
Walking Speed (ft/s)						
Percent Blockage						
Right turn flare (veh)						
Median type	None					
Median storage veh)						
Upstream signal (ft)			844			
pX, platoon unblocked	0.66	0.66			0.66	
vC, conflicting volume	3726	1618			3236	
vC1, stage 1 conf vol						
vC2, stage 2 conf vol						
vCu, unblocked vol	4602	1424			3862	
tC, single (s)	6.8	6.9			4.1	
tC, 2 stage (s)						
tF (s)	3.5	3.3			2.2	
p0 queue free %	100	95			100	
cM capacity (veh/h)	0	83			33	

Direction, Lane #	WB 1	NB 1	NB 2	SB 1	SB 2
Volume Total	4	2140	1095	503	503
Volume Left	0	0	0	0	0
Volume Right	4	0	25	0	0
cSH	83	1700	1700	1700	1700
Volume to Capacity	0.05	1.26	0.64	0.30	0.30
Queue Length 95th (ft)	4	0	0	0	0
Control Delay (s)	50.7	0.0	0.0	0.0	0.0
Lane LOS	F				
Approach Delay (s)	50.7	0.0		0.0	
Approach LOS	F				

Intersection Summary			
Average Delay	0.1		
Intersection Capacity Utilization	95.1%	ICU Level of Service	F
Analysis Period (min)	15		

Movement	WBL	WBR	NBT	NBR	SBL	SBT
Lane Configurations						
Sign Control	Stop		Free			Free
Grade	0%		0%			0%
Volume (veh/h)	0	4	3030	24	0	956
Peak Hour Factor	0.95	0.95	0.95	0.95	0.95	0.95
Hourly flow rate (vph)	0	4	3189	25	0	1006
Pedestrians						
Lane Width (ft)						
Walking Speed (ft/s)						
Percent Blockage						
Right turn flare (veh)						
Median type	None					
Median storage veh)						
Upstream signal (ft)						
pX, platoon unblocked						
vC, conflicting volume	3705	1607			3215	
vC1, stage 1 conf vol						
vC2, stage 2 conf vol						
vCu, unblocked vol	3705	1607			3215	
tC, single (s)	6.8	6.9			4.1	
tC, 2 stage (s)						
tF (s)	3.5	3.3			2.2	
p0 queue free %	100	96			100	
cM capacity (veh/h)	3	94			92	

Direction, Lane #	WB 1	NB 1	NB 2	SB 1	SB 2
Volume Total	4	2126	1088	503	503
Volume Left	0	0	0	0	0
Volume Right	4	0	25	0	0
cSH	94	1700	1700	1700	1700
Volume to Capacity	0.04	1.25	0.64	0.30	0.30
Queue Length 95th (ft)	3	0	0	0	0
Control Delay (s)	45.2	0.0	0.0	0.0	0.0
Lane LOS	E				
Approach Delay (s)	45.2	0.0		0.0	
Approach LOS	E				

Intersection Summary				
Average Delay		0.0		
Intersection Capacity Utilization		94.5%	ICU Level of Service	F
Analysis Period (min)		15		

Movement	EBL	EBT	EBR	WBL	WBT	WBR	NBL	NBT	NBR	SBL	SBT	SBR
Lane Configurations												
Sign Control		Stop			Stop			Free			Free	
Grade		0%			0%			0%			0%	
Volume (veh/h)	0	0	95	0	0	4	0	3024	10	0	860	421
Peak Hour Factor	0.95	0.95	0.95	0.95	0.95	0.95	0.95	0.95	0.95	0.95	0.95	0.95
Hourly flow rate (vph)	0	0	100	0	0	4	0	3183	11	0	905	443
Pedestrians												
Lane Width (ft)												
Walking Speed (ft/s)												
Percent Blockage												
Right turn flare (veh)												
Median type		None			None							
Median storage veh)												
Upstream signal (ft)												
pX, platoon unblocked												
vC, conflicting volume	2723	4321	674	3741	4537	1597	1348			3194		
vC1, stage 1 conf vol												
vC2, stage 2 conf vol												
vCu, unblocked vol	2723	4321	674	3741	4537	1597	1348			3194		
tC, single (s)	7.5	6.5	6.9	7.5	6.5	6.9	4.1			4.1		
tC, 2 stage (s)												
tF (s)	3.5	4.0	3.3	3.5	4.0	3.3	2.2			2.2		
p0 queue free %	100	100	75	100	100	96	100			100		
cM capacity (veh/h)	9	2	397	1	1	95	507			94		

Direction, Lane #	EB 1	WB 1	NB 1	NB 2	SB 1	SB 2
Volume Total	100	4	2122	1072	604	745
Volume Left	0	0	0	0	0	0
Volume Right	100	4	0	11	0	443
cSH	397	95	1700	1700	1700	1700
Volume to Capacity	0.25	0.04	1.25	0.63	0.36	0.44
Queue Length 95th (ft)	25	3	0	0	0	0
Control Delay (s)	17.1	44.5	0.0	0.0	0.0	0.0
Lane LOS	C	E				
Approach Delay (s)	17.1	44.5	0.0		0.0	
Approach LOS	C	E				

Intersection Summary				
Average Delay		0.4		
Intersection Capacity Utilization		93.9%	ICU Level of Service	F
Analysis Period (min)		15		

Movement	EBL	EBR	NBL	NBT	SBT	SBR
Lane Configurations						
Sign Control	Stop			Free	Free	
Grade	0%			0%	0%	
Volume (veh/h)	0	99	0	3028	1182	430
Peak Hour Factor	0.95	0.95	0.95	0.95	0.95	0.95
Hourly flow rate (vph)	0	104	0	3187	1244	453
Pedestrians						
Lane Width (ft)						
Walking Speed (ft/s)						
Percent Blockage						
Right turn flare (veh)						
Median type	None					
Median storage veh)						
Upstream signal (ft)					936	
pX, platoon unblocked	0.70	0.70	0.70			
vC, conflicting volume	2838	622	1697			
vC1, stage 1 conf vol						
vC2, stage 2 conf vol						
vCu, unblocked vol	3193	39	1569			
tC, single (s)	6.8	6.9	4.1			
tC, 2 stage (s)						
tF (s)	3.5	3.3	2.2			
p0 queue free %	100	86	100			
cM capacity (veh/h)	5	720	293			

Direction, Lane #	EB 1	NB 1	NB 2	SB 1	SB 2	SB 3
Volume Total	104	1594	1594	622	622	453
Volume Left	0	0	0	0	0	0
Volume Right	104	0	0	0	0	453
cSH	720	1700	1700	1700	1700	1700
Volume to Capacity	0.14	0.94	0.94	0.37	0.37	0.27
Queue Length 95th (ft)	13	0	0	0	0	0
Control Delay (s)	10.8	0.0	0.0	0.0	0.0	0.0
Lane LOS	B					
Approach Delay (s)	10.8	0.0		0.0		
Approach LOS	B					

Intersection Summary				
Average Delay	0.2			
Intersection Capacity Utilization	87.0%	ICU Level of Service	E	
Analysis Period (min)	15			

Movement	EBL	EBR	NBL	NBT	SBT	SBR
Lane Configurations						
Ideal Flow (vphpl)	1900	1900	1900	1900	1900	1900
Total Lost time (s)	4.0	4.0	4.0	4.0	4.0	
Lane Util. Factor	1.00	1.00	1.00	0.95	0.91	
Frt	1.00	0.85	1.00	1.00	1.00	
Flt Protected	0.95	1.00	0.95	1.00	1.00	
Satd. Flow (prot)	1770	1583	1770	3539	5076	
Flt Permitted	0.95	1.00	0.10	1.00	1.00	
Satd. Flow (perm)	1770	1583	191	3539	5076	
Volume (vph)	54	138	728	2300	1474	19
Peak-hour factor, PHF	0.95	0.95	0.95	0.95	0.95	0.95
Adj. Flow (vph)	57	145	766	2421	1552	20
RTOR Reduction (vph)	0	0	0	0	1	0
Lane Group Flow (vph)	57	145	766	2421	1571	0
Turn Type		pt+ov	pm+pt			
Protected Phases	4	4 5	5	2	6	
Permitted Phases			2			
Actuated Green, G (s)	10.1	60.1	82.0	82.0	34.0	
Effective Green, g (s)	13.1	63.1	85.0	85.0	35.0	
Actuated g/C Ratio	0.12	0.59	0.80	0.80	0.33	
Clearance Time (s)	7.0		7.0	7.0	5.0	
Vehicle Extension (s)	2.0		2.0	2.0	2.0	
Lane Grp Cap (vph)	219	941	838	2835	1674	
v/s Ratio Prot	c0.03	0.09	c0.40	0.68	0.31	
v/s Ratio Perm			c0.34			
v/c Ratio	0.26	0.15	0.91	0.85	0.94	
Uniform Delay, d1	42.1	9.6	24.0	6.6	34.5	
Progression Factor	1.00	1.00	1.00	1.00	1.00	
Incremental Delay, d2	0.2	0.0	14.0	2.6	10.4	
Delay (s)	42.3	9.6	38.0	9.2	44.9	
Level of Service	D	A	D	A	D	
Approach Delay (s)	18.9			16.2	44.9	
Approach LOS	B			B	D	

Intersection Summary			
HCM Average Control Delay	25.4	HCM Level of Service	C
HCM Volume to Capacity ratio	0.81		
Actuated Cycle Length (s)	106.1	Sum of lost time (s)	8.0
Intersection Capacity Utilization	87.6%	ICU Level of Service	E
Analysis Period (min)	15		
c Critical Lane Group			

Movement	EBL	EBR	NBL	NBT	SBT	SBR
Lane Configurations						
Ideal Flow (vphpl)	1900	1900	1900	1900	1900	1900
Total Lost time (s)	4.0	4.0	4.0	4.0	4.0	
Lane Util. Factor	1.00	1.00	1.00	0.95	0.95	
Frt	1.00	0.85	1.00	1.00	1.00	
Flt Protected	0.95	1.00	0.95	1.00	1.00	
Satd. Flow (prot)	1770	1583	1770	3539	3529	
Flt Permitted	0.95	1.00	0.09	1.00	1.00	
Satd. Flow (perm)	1770	1583	160	3539	3529	
Volume (vph)	75	208	744	1610	1286	26
Peak-hour factor, PHF	0.95	0.95	0.95	0.95	0.95	0.95
Adj. Flow (vph)	79	219	783	1695	1354	27
RTOR Reduction (vph)	0	0	0	0	1	0
Lane Group Flow (vph)	79	219	783	1695	1380	0
Turn Type		Free	pm+pt			
Protected Phases	4		5	2	6	
Permitted Phases		Free	2			
Actuated Green, G (s)	8.2	100.5	78.3	78.3	39.7	
Effective Green, g (s)	11.2	100.5	81.3	81.3	42.7	
Actuated g/C Ratio	0.11	1.00	0.81	0.81	0.42	
Clearance Time (s)	7.0		7.0	7.0	7.0	
Vehicle Extension (s)	2.0		2.0	2.0	2.0	
Lane Grp Cap (vph)	197	1583	684	2863	1499	
v/s Ratio Prot	c0.04		c0.39	0.48	0.39	
v/s Ratio Perm		0.14	c0.53			
v/c Ratio	0.40	0.14	1.14	0.59	0.92	
Uniform Delay, d1	41.5	0.0	28.6	3.5	27.3	
Progression Factor	1.00	1.00	1.00	1.00	1.00	
Incremental Delay, d2	0.5	0.2	81.7	0.2	9.4	
Delay (s)	42.0	0.2	110.3	3.7	36.7	
Level of Service	D	A	F	A	D	
Approach Delay (s)	11.3			37.4	36.7	
Approach LOS	B			D	D	

Intersection Summary			
HCM Average Control Delay	35.3	HCM Level of Service	D
HCM Volume to Capacity ratio	1.04		
Actuated Cycle Length (s)	100.5	Sum of lost time (s)	8.0
Intersection Capacity Utilization	95.9%	ICU Level of Service	F
Analysis Period (min)	15		

c Critical Lane Group

Movement	EBL	EBR	NBL	NBT	SBT	SBR
Lane Configurations						
Ideal Flow (vphpl)	1900	1900	1900	1900	1900	1900
Total Lost time (s)	4.0	4.0	4.0	4.0	4.0	
Lane Util. Factor	1.00	1.00	1.00	0.95	0.95	
Frt	1.00	0.85	1.00	1.00	1.00	
Flt Protected	0.95	1.00	0.95	1.00	1.00	
Satd. Flow (prot)	1770	1583	1770	3539	3529	
Flt Permitted	0.95	1.00	0.10	1.00	1.00	
Satd. Flow (perm)	1770	1583	177	3539	3529	
Volume (vph)	65	208	744	941	1104	21
Peak-hour factor, PHF	0.95	0.95	0.95	0.95	0.95	0.95
Adj. Flow (vph)	68	219	783	991	1162	22
RTOR Reduction (vph)	0	7	0	0	1	0
Lane Group Flow (vph)	68	212	783	991	1183	0
Turn Type		pm+ov	pm+pt			
Protected Phases	4	5	5	2	6	
Permitted Phases		4	2			
Actuated Green, G (s)	7.9	44.6	78.8	78.8	35.1	
Effective Green, g (s)	10.9	50.6	81.8	81.8	38.1	
Actuated g/C Ratio	0.11	0.50	0.81	0.81	0.38	
Clearance Time (s)	7.0	7.0	7.0	7.0	7.0	
Vehicle Extension (s)	2.0	2.0	2.0	2.0	2.0	
Lane Grp Cap (vph)	192	858	772	2875	1335	
v/s Ratio Prot	c0.04	0.10	c0.40	0.28	0.34	
v/s Ratio Perm		0.04	c0.42			
v/c Ratio	0.35	0.25	1.01	0.34	0.89	
Uniform Delay, d1	41.6	14.2	26.4	2.5	29.3	
Progression Factor	1.00	1.00	1.00	1.00	1.00	
Incremental Delay, d2	0.4	0.1	36.0	0.0	7.2	
Delay (s)	42.0	14.3	62.4	2.5	36.5	
Level of Service	D	B	E	A	D	
Approach Delay (s)	20.9			28.9	36.5	
Approach LOS	C			C	D	

Intersection Summary			
HCM Average Control Delay	31.0	HCM Level of Service	C
HCM Volume to Capacity ratio	0.92		
Actuated Cycle Length (s)	100.7	Sum of lost time (s)	8.0
Intersection Capacity Utilization	90.7%	ICU Level of Service	E
Analysis Period (min)	15		

c Critical Lane Group

Movement	EBL	EBT	WBT	WBR	SWL	SWR
Lane Configurations		↑↑	↑↑			↱↑
Sign Control		Free	Free		Stop	
Grade		0%	0%		0%	
Volume (veh/h)	0	843	1619	0	0	1040
Peak Hour Factor	0.95	0.95	0.95	0.95	0.95	0.95
Hourly flow rate (vph)	0	887	1704	0	0	1095
Pedestrians						
Lane Width (ft)						
Walking Speed (ft/s)						
Percent Blockage						
Right turn flare (veh)						
Median type					None	
Median storage veh)						
Upstream signal (ft)		411				
pX, platoon unblocked					0.96	
vC, conflicting volume	1704				2148	852
vC1, stage 1 conf vol						
vC2, stage 2 conf vol						
vCu, unblocked vol	1704				2154	852
tC, single (s)	4.1				6.8	6.9
tC, 2 stage (s)						
tF (s)	2.2				3.5	3.3
p0 queue free %	100				100	0
cM capacity (veh/h)	369				39	303

Direction, Lane #	EB 1	EB 2	WB 1	WB 2	SW 1	SW 2
Volume Total	444	444	852	852	547	547
Volume Left	0	0	0	0	0	0
Volume Right	0	0	0	0	547	547
cSH	1700	1700	1700	1700	303	303
Volume to Capacity	0.26	0.26	0.50	0.50	1.81	1.81
Queue Length 95th (ft)	0	0	0	0	906	906
Control Delay (s)	0.0	0.0	0.0	0.0	405.0	405.0
Lane LOS					F	F
Approach Delay (s)	0.0		0.0		405.0	
Approach LOS					F	

Intersection Summary			
Average Delay	120.3		
Intersection Capacity Utilization	87.8%	ICU Level of Service	E
Analysis Period (min)	15		

Movement	EBL	EBR	NBL	NBT	SBT	SBR
Lane Configurations	↰	↱	↰	↑↑	↑↑	
Ideal Flow (vphpl)	1900	1900	1900	1900	1900	1900
Total Lost time (s)	4.0	4.0	4.0	4.0	4.0	
Lane Util. Factor	1.00	1.00	1.00	0.95	0.95	
Frt	1.00	0.85	1.00	1.00	0.97	
Flt Protected	0.95	1.00	0.95	1.00	1.00	
Satd. Flow (prot)	1770	1583	1770	3539	3435	
Flt Permitted	0.95	1.00	0.09	1.00	1.00	
Satd. Flow (perm)	1770	1583	175	3539	3435	
Volume (vph)	65	207	780	225	918	225
Peak-hour factor, PHF	0.95	0.95	0.95	0.95	0.95	0.95
Adj. Flow (vph)	68	218	821	237	966	237
RTOR Reduction (vph)	0	14	0	0	20	0
Lane Group Flow (vph)	68	204	821	237	1183	0
Turn Type		pm+ov	pm+pt			
Protected Phases	4	5	5	2	6	
Permitted Phases		4	2			
Actuated Green, G (s)	5.3	49.4	86.6	86.6	35.5	
Effective Green, g (s)	8.3	55.4	89.6	89.6	38.5	
Actuated g/C Ratio	0.08	0.52	0.85	0.85	0.36	
Clearance Time (s)	7.0	7.0	7.0	7.0	7.0	
Vehicle Extension (s)	2.0	2.0	2.0	2.0	2.0	
Lane Grp Cap (vph)	139	888	857	2994	1249	
v/s Ratio Prot	c0.04	0.10	c0.43	0.07	0.34	
v/s Ratio Perm		0.03	c0.38			
v/c Ratio	0.49	0.23	0.96	0.08	0.95	
Uniform Delay, d1	46.8	13.7	24.8	1.3	32.7	
Progression Factor	1.00	1.00	1.00	1.00	1.00	
Incremental Delay, d2	1.0	0.0	20.8	0.0	14.4	
Delay (s)	47.8	13.7	45.5	1.3	47.1	
Level of Service	D	B	D	A	D	
Approach Delay (s)	21.8			35.6	47.1	
Approach LOS	C			D	D	

Intersection Summary			
HCM Average Control Delay	39.5	HCM Level of Service	D
HCM Volume to Capacity ratio	0.90		
Actuated Cycle Length (s)	105.9	Sum of lost time (s)	8.0
Intersection Capacity Utilization	91.6%	ICU Level of Service	F
Analysis Period (min)	15		
c Critical Lane Group			

HCM Signalized Intersection Capacity Analysis
5: Route 7 & Countryside Blvd.

Kincora
Total Future 2025

Movement	EBL	EBT	EBR	WBL	WBT	WBR	NBL	NBT	NBR	SBL	SBT	SBR
Lane Configurations												
Ideal Flow (vphpl)	1900	1900	1900	1900	1900	1900	1900	1900	1900	1900	1900	1900
Total Lost time (s)	3.0	3.0	3.0	3.0	3.0	3.0	3.0	3.0	3.0	3.0	3.0	3.0
Lane Util. Factor	0.97	0.86	1.00	0.97	0.86	1.00	0.97	0.95	1.00	0.97	0.95	1.00
Frt	1.00	1.00	0.85	1.00	1.00	0.85	1.00	1.00	0.85	1.00	1.00	0.85
Flt Protected	0.95	1.00	1.00	0.95	1.00	1.00	0.95	1.00	1.00	0.95	1.00	1.00
Satd. Flow (prot)	3433	6408	1583	3433	6408	1583	3433	3539	1583	3433	3539	1583
Flt Permitted	0.95	1.00	1.00	0.95	1.00	1.00	0.95	1.00	1.00	0.95	1.00	1.00
Satd. Flow (perm)	3433	6408	1583	3433	6408	1583	3433	3539	1583	3433	3539	1583
Volume (vph)	591	3114	175	651	2827	214	286	148	413	186	163	333
Peak-hour factor, PHF	0.95	0.95	0.95	0.95	0.95	0.95	0.95	0.95	0.95	0.95	0.95	0.95
Adj. Flow (vph)	622	3278	184	685	2976	225	301	156	435	196	172	351
RTOR Reduction (vph)	0	0	0	0	0	11	0	0	0	0	0	1
Lane Group Flow (vph)	622	3278	184	685	2976	214	301	156	435	196	172	350
Turn Type	Prot		Free	Prot		pm+ov	Prot		Free	Prot		pm+ov
Protected Phases	1	6		5	2	3	7	4		3	8	1
Permitted Phases			Free			2			Free			8
Actuated Green, G (s)	24.7	68.1	140.0	27.1	70.5	80.2	8.0	7.1	140.0	9.7	8.8	33.5
Effective Green, g (s)	28.7	72.1	140.0	31.1	74.5	88.2	12.0	11.1	140.0	13.7	12.8	41.5
Actuated g/C Ratio	0.20	0.51	1.00	0.22	0.53	0.63	0.09	0.08	1.00	0.10	0.09	0.30
Clearance Time (s)	7.0	7.0		7.0	7.0	7.0	7.0	7.0		7.0	7.0	7.0
Vehicle Extension (s)	2.0	2.0		3.0	2.0	2.0	2.0	2.0		2.0	2.0	2.0
Lane Grp Cap (vph)	704	3300	1583	763	3410	1031	294	281	1583	336	324	503
v/s Ratio Prot	0.18	c0.51		c0.20	0.46	0.02	c0.09	0.04		0.06	0.05	c0.14
v/s Ratio Perm			0.12			0.11			c0.27			0.08
v/c Ratio	0.88	0.99	0.12	0.90	0.87	0.21	1.02	0.56	0.27	0.58	0.53	0.70
Uniform Delay, d1	54.0	33.7	0.0	52.9	28.6	11.0	64.0	62.1	0.0	60.4	60.7	43.7
Progression Factor	1.00	1.00	1.00	1.00	1.00	1.00	1.00	1.00	1.00	1.00	1.00	1.00
Incremental Delay, d2	12.3	14.2	0.1	13.3	3.4	0.0	58.7	1.3	0.4	1.7	0.8	3.4
Delay (s)	66.3	47.9	0.1	66.2	32.0	11.1	122.7	63.4	0.4	62.1	61.6	47.0
Level of Service	E	D	A	E	C	B	F	E	A	E	E	D
Approach Delay (s)		48.6			36.8			52.7			54.6	
Approach LOS		D			D			D			D	

Intersection Summary			
HCM Average Control Delay	44.6	HCM Level of Service	D
HCM Volume to Capacity ratio	0.92		
Actuated Cycle Length (s)	140.0	Sum of lost time (s)	9.0
Intersection Capacity Utilization	90.2%	ICU Level of Service	E
Analysis Period (min)	15		

c Critical Lane Group

HCM Signalized Intersection Capacity Analysis
6: Route 7 & Palisade Parkway

Kincora
Total Future 2025

Movement	EBL	EBT	EBR	WBL	WBT	WBR	NBL	NBT	NBR	SBL	SBT	SBR
Lane Configurations												
Ideal Flow (vphpl)	1900	1900	1900	1900	1900	1900	1900	1900	1900	1900	1900	1900
Total Lost time (s)	3.0	3.0	3.0	3.0	3.0	3.0	3.0	3.0	3.0	3.0	3.0	3.0
Lane Util. Factor	0.97	0.86	1.00	1.00	0.86	1.00	0.97	1.00	1.00	0.97	1.00	1.00
Frt	1.00	1.00	0.85	1.00	1.00	0.85	1.00	1.00	0.85	1.00	1.00	0.85
Flt Protected	0.95	1.00	1.00	0.95	1.00	1.00	0.95	1.00	1.00	0.95	1.00	1.00
Satd. Flow (prot)	3433	6408	1583	1770	6408	1583	3433	1863	1583	3433	1863	1583
Flt Permitted	0.95	1.00	1.00	0.95	1.00	1.00	0.95	1.00	1.00	0.95	1.00	1.00
Satd. Flow (perm)	3433	6408	1583	1770	6408	1583	3433	1863	1583	3433	1863	1583
Volume (vph)	263	3295	25	74	3030	161	391	97	234	225	77	234
Peak-hour factor, PHF	0.95	0.95	0.95	0.95	0.95	0.95	0.95	0.95	0.95	0.95	0.95	0.95
Adj. Flow (vph)	277	3468	26	78	3189	169	412	102	246	237	81	246
RTOR Reduction (vph)	0	0	0	0	0	0	0	0	8	0	0	4
Lane Group Flow (vph)	277	3468	26	78	3189	169	412	102	238	237	81	242
Turn Type	Prot		Free	Prot		Free	Prot		pm+ov	Prot		pm+ov
Protected Phases	1	6		5	2		7	4	5	3	8	1
Permitted Phases			Free			Free			4			8
Actuated Green, G (s)	11.5	63.0	120.0	8.1	59.6	120.0	16.9	10.9	19.0	10.0	4.0	15.5
Effective Green, g (s)	15.5	67.0	120.0	12.1	63.6	120.0	20.9	14.9	27.0	14.0	8.0	23.5
Actuated g/C Ratio	0.13	0.56	1.00	0.10	0.53	1.00	0.17	0.12	0.22	0.12	0.07	0.20
Clearance Time (s)	7.0	7.0		7.0	7.0		7.0	7.0	7.0	7.0	7.0	7.0
Vehicle Extension (s)	2.0	4.0		2.0	4.0		3.0	3.0	2.0	3.0	3.0	2.0
Lane Grp Cap (vph)	443	3578	1583	178	3396	1583	598	231	396	401	124	350
v/s Ratio Prot	0.08	c0.54		0.04	0.50		c0.12	0.05	c0.06	0.07	0.04	c0.09
v/s Ratio Perm			0.02			0.11			0.09			0.06
v/c Ratio	0.63	0.97	0.02	0.44	0.94	0.11	0.69	0.44	0.60	0.59	0.65	0.69
Uniform Delay, d1	49.5	25.5	0.0	50.8	26.4	0.0	46.5	48.7	41.7	50.3	54.6	44.9
Progression Factor	1.00	1.00	1.00	1.00	1.00	1.00	1.00	1.00	1.00	1.00	1.00	1.00
Incremental Delay, d2	2.0	9.4	0.0	0.6	6.6	0.1	3.3	1.3	1.8	2.3	11.7	4.7
Delay (s)	51.5	34.9	0.0	51.4	33.0	0.1	49.8	50.0	43.4	52.6	66.3	49.6
Level of Service	D	C	A	D	C	A	D	D	D	D	E	D
Approach Delay (s)		35.9			31.8			47.8			53.3	
Approach LOS		D			C			D			D	

Intersection Summary			
HCM Average Control Delay	36.5	HCM Level of Service	D
HCM Volume to Capacity ratio	0.83		
Actuated Cycle Length (s)	120.0	Sum of lost time (s)	3.0
Intersection Capacity Utilization	79.7%	ICU Level of Service	D
Analysis Period (min)	15		

c Critical Lane Group

Movement	WBL	WBR	NBT	NBR	SBL	SBT
Lane Configurations						
Ideal Flow (vphpl)	1900	1900	1900	1900	1900	1900
Total Lost time (s)	3.0	3.0	3.0		3.0	3.0
Lane Util. Factor	1.00	1.00	0.95		1.00	0.95
Frt	1.00	0.85	0.98		1.00	1.00
Flt Protected	0.95	1.00	1.00		0.95	1.00
Satd. Flow (prot)	1770	1583	3466		1770	3539
Flt Permitted	0.95	1.00	1.00		0.19	1.00
Satd. Flow (perm)	1770	1583	3466		346	3539
Volume (vph)	112	262	733	117	250	603
Peak-hour factor, PHF	0.95	0.95	0.95	0.95	0.95	0.95
Adj. Flow (vph)	118	276	772	123	263	635
RTOR Reduction (vph)	0	80	11	0	0	0
Lane Group Flow (vph)	118	196	884	0	263	635
Turn Type		pm+ov			pm+pt	
Protected Phases	4	1	2		1	6
Permitted Phases		4			6	
Actuated Green, G (s)	7.0	15.8	20.4		36.2	36.2
Effective Green, g (s)	11.0	23.8	24.9		40.7	40.7
Actuated g/C Ratio	0.19	0.41	0.43		0.71	0.71
Clearance Time (s)	7.0	7.0	7.5		7.0	7.5
Vehicle Extension (s)	2.0	2.0	2.0		2.0	2.0
Lane Grp Cap (vph)	337	735	1496		560	2496
v/s Ratio Prot	c0.07	0.06	c0.26		c0.10	0.18
v/s Ratio Perm		0.06			0.23	
v/c Ratio	0.35	0.27	0.59		0.47	0.25
Uniform Delay, d1	20.3	11.2	12.5		5.0	3.1
Progression Factor	1.00	1.00	1.00		1.00	1.00
Incremental Delay, d2	0.2	0.1	0.4		0.2	0.0
Delay (s)	20.5	11.3	12.9		5.3	3.1
Level of Service	C	B	B		A	A
Approach Delay (s)	14.0		12.9			3.7
Approach LOS	B		B			A

Intersection Summary

HCM Average Control Delay	9.3	HCM Level of Service	A
HCM Volume to Capacity ratio	0.51		
Actuated Cycle Length (s)	57.7	Sum of lost time (s)	9.0
Intersection Capacity Utilization	54.0%	ICU Level of Service	A
Analysis Period (min)	15		

c Critical Lane Group

Movement	EBL	EBT	EBR	WBL	WBT	WBR	NBL	NBT	NBR	SBL	SBT	SBR
Lane Configurations												
Ideal Flow (vphpl)	1900	1900	1900	1900	1900	1900	1900	1900	1900	1900	1900	1900
Total Lost time (s)		4.0	4.0		4.0	4.0	4.0	4.0	4.0	4.0	4.0	4.0
Lane Util. Factor		1.00	1.00		1.00	1.00	1.00	0.95	1.00	1.00	0.95	1.00
Frt		1.00	0.85		1.00	0.85	1.00	1.00	0.85	1.00	1.00	0.85
Flt Protected		0.96	1.00		0.95	1.00	0.95	1.00	1.00	0.95	1.00	1.00
Satd. Flow (prot)		1779	1583		1770	1583	1770	3539	1583	1770	3539	1583
Flt Permitted		0.71	1.00		0.74	1.00	0.37	1.00	1.00	0.30	1.00	1.00
Satd. Flow (perm)		1323	1583		1370	1583	694	3539	1583	556	3539	1583
Volume (vph)	29	2	82	37	0	30	148	871	83	29	608	72
Peak-hour factor, PHF	0.95	0.95	0.95	0.95	0.95	0.95	0.95	0.95	0.95	0.95	0.95	0.95
Adj. Flow (vph)	31	2	86	39	0	32	156	917	87	31	640	76
RTOR Reduction (vph)	0	0	70	0	0	27	0	0	25	0	0	24
Lane Group Flow (vph)	0	33	16	0	39	5	156	917	62	31	640	52
Turn Type	Perm		pm+ov	Perm		pm+ov	pm+pt		Perm	pm+pt		Perm
Protected Phases		4	5		8	1	5	2		1	6	
Permitted Phases	4		4	8		8	2		2	6		6
Actuated Green, G (s)		4.9	10.9		4.9	7.9	67.1	61.1	61.1	61.1	58.1	58.1
Effective Green, g (s)		7.9	16.9		7.9	13.9	73.1	64.1	64.1	67.1	61.1	61.1
Actuated g/C Ratio		0.09	0.19		0.09	0.15	0.81	0.71	0.71	0.75	0.68	0.68
Clearance Time (s)		7.0	7.0		7.0	7.0	7.0	7.0	7.0	7.0	7.0	7.0
Vehicle Extension (s)		2.0	2.0		2.0	2.0	2.0	2.0	2.0	2.0	2.0	2.0
Lane Grp Cap (vph)		116	368		120	315	671	2521	1127	495	2403	1075
v/s Ratio Prot			0.00			0.00	c0.02	c0.26		0.00	0.18	
v/s Ratio Perm		0.02	0.01		c0.03	0.00	0.17		0.04	0.04		0.03
v/c Ratio		0.28	0.04		0.33	0.02	0.23	0.36	0.05	0.06	0.27	0.05
Uniform Delay, d1		38.4	29.9		38.5	32.3	2.0	5.0	3.9	3.0	5.7	4.8
Progression Factor		1.00	1.00		1.00	1.00	1.00	1.00	1.00	1.00	1.00	1.00
Incremental Delay, d2		0.5	0.0		0.6	0.0	0.1	0.4	0.1	0.0	0.3	0.1
Delay (s)		38.9	30.0		39.1	32.3	2.0	5.4	4.0	3.0	5.9	4.9
Level of Service		D	C		D	C	A	A	A	A	A	A
Approach Delay (s)		32.4			36.0			4.9			5.7	
Approach LOS		C			D			A			A	

Intersection Summary

HCM Average Control Delay	7.8	HCM Level of Service	A
HCM Volume to Capacity ratio	0.36		
Actuated Cycle Length (s)	90.0	Sum of lost time (s)	12.0
Intersection Capacity Utilization	46.1%	ICU Level of Service	A
Analysis Period (min)	15		

c Critical Lane Group

Movement	EBL	EBT	EBR	WBL	WBT	WBR	NBL	NBT	NBR	SBL	SBT	SBR
Lane Configurations												
Ideal Flow (vphpl)	1900	1900	1900	1900	1900	1900	1900	1900	1900	1900	1900	1900
Total Lost time (s)	3.0	3.0	3.0	3.0	3.0	3.0	3.0	3.0	3.0	3.0	3.0	3.0
Lane Util. Factor	1.00	0.95	1.00	0.97	0.95	1.00	0.97	0.95	1.00	0.97	0.95	1.00
Frt	1.00	1.00	0.85	1.00	1.00	0.85	1.00	1.00	0.85	1.00	1.00	0.85
Flt Protected	0.95	1.00	1.00	0.95	1.00	1.00	0.95	1.00	1.00	0.95	1.00	1.00
Satd. Flow (prot)	1770	3539	1583	3433	3539	1583	3433	3539	1583	3433	3539	1583
Flt Permitted	0.95	1.00	1.00	0.95	1.00	1.00	0.95	1.00	1.00	0.95	1.00	1.00
Satd. Flow (perm)	1770	3539	1583	3433	3539	1583	3433	3539	1583	3433	3539	1583
Volume (vph)	290	454	220	191	704	306	334	949	146	164	1002	501
Peak-hour factor, PHF	0.95	0.95	0.95	0.95	0.95	0.95	0.95	0.95	0.95	0.95	0.95	0.95
Adj. Flow (vph)	305	478	232	201	741	322	352	999	154	173	1055	527
RTOR Reduction (vph)	0	0	0	0	0	0	0	0	0	0	0	0
Lane Group Flow (vph)	305	478	232	201	741	322	352	999	154	173	1055	527
Turn Type	Prot		Free	Prot		Free	Prot		Free	Prot		Free
Protected Phases	7	4		3	8		5	2		1	6	
Permitted Phases			Free			Free			Free			Free
Actuated Green, G (s)	27.1	48.1	150.3	10.7	31.7	150.3	15.0	54.5	150.3	9.0	48.5	150.3
Effective Green, g (s)	31.1	52.1	150.3	14.7	35.7	150.3	19.0	58.5	150.3	13.0	52.5	150.3
Actuated g/C Ratio	0.21	0.35	1.00	0.10	0.24	1.00	0.13	0.39	1.00	0.09	0.35	1.00
Clearance Time (s)	7.0	7.0		7.0	7.0		7.0	7.0		7.0	7.0	
Vehicle Extension (s)	3.0	3.0		3.0	3.0		3.0	5.0		3.0	5.0	
Lane Grp Cap (vph)	366	1227	1583	336	841	1583	434	1377	1583	297	1236	1583
v/s Ratio Prot	c0.17	0.14		0.06	c0.21		c0.10	0.28		0.05	c0.30	
v/s Ratio Perm			0.15			0.20			0.10			0.33
v/c Ratio	0.83	0.39	0.15	0.60	0.88	0.20	0.81	0.73	0.10	0.58	0.85	0.33
Uniform Delay, d1	57.1	37.1	0.0	65.0	55.3	0.0	63.9	39.1	0.0	66.0	45.3	0.0
Progression Factor	1.00	1.00	1.00	1.00	1.00	1.00	1.00	1.00	1.00	1.00	1.00	1.00
Incremental Delay, d2	14.9	0.2	0.2	2.9	10.7	0.3	11.0	2.4	0.1	2.9	6.5	0.6
Delay (s)	72.0	37.3	0.2	67.6	65.9	0.3	74.9	41.4	0.1	68.9	51.8	0.6
Level of Service	E	D	A	E	E	A	E	D	A	E	D	A
Approach Delay (s)		39.3			49.5			45.0			38.1	
Approach LOS		D			D			D			D	

Intersection Summary			
HCM Average Control Delay	42.8	HCM Level of Service	D
HCM Volume to Capacity ratio	0.85		
Actuated Cycle Length (s)	150.3	Sum of lost time (s)	12.0
Intersection Capacity Utilization	86.1%	ICU Level of Service	E
Analysis Period (min)	15		

c Critical Lane Group

Movement	EBL	EBT	EBR	WBL	WBT	WBR	NBL	NBT	NBR	SBL	SBT	SBR
Lane Configurations												
Ideal Flow (vphpl)	1900	1900	1900	1900	1900	1900	1900	1900	1900	1900	1900	1900
Total Lost time (s)	4.0	4.0	4.0	4.0	4.0	4.0	4.0	4.0	4.0	4.0	4.0	4.0
Lane Util. Factor	0.97	0.95	1.00	0.97	0.95	1.00	1.00	0.91	1.00	0.97	0.91	1.00
Frt	1.00	1.00	0.85	1.00	1.00	0.85	1.00	1.00	0.85	1.00	1.00	0.85
Flt Protected	0.95	1.00	1.00	0.95	1.00	1.00	0.95	1.00	1.00	0.95	1.00	1.00
Satd. Flow (prot)	3433	3539	1583	3433	3539	1583	1770	5085	1583	3433	5085	1583
Flt Permitted	0.95	1.00	1.00	0.95	1.00	1.00	0.95	1.00	1.00	0.95	1.00	1.00
Satd. Flow (perm)	3433	3539	1583	3433	3539	1583	1770	5085	1583	3433	5085	1583
Volume (vph)	153	349	54	16	472	16	57	1709	121	843	1797	94
Peak-hour factor, PHF	0.95	0.95	0.95	0.95	0.95	0.95	0.95	0.95	0.95	0.95	0.95	0.95
Adj. Flow (vph)	161	367	57	17	497	17	80	1799	127	887	1892	99
RTOR Reduction (vph)	0	0	43	0	0	2	0	0	14	0	0	37
Lane Group Flow (vph)	161	367	14	17	497	15	60	1799	113	887	1892	62
Turn Type	Prot		pm+ov	Prot		pm+ov	Prot		pm+ov	Prot		pm+ov
Protected Phases	7	4	5	3	8	1	5	2	3	1	6	7
Permitted Phases			4			8			2			6
Actuated Green, G (s)	4.5	17.3	22.9	5.1	17.9	47.7	5.6	40.5	45.6	29.8	64.7	69.2
Effective Green, g (s)	7.5	20.3	28.9	8.1	20.9	53.7	8.6	43.5	51.6	32.8	67.7	75.2
Actuated g/C Ratio	0.06	0.17	0.24	0.07	0.17	0.44	0.07	0.36	0.43	0.27	0.56	0.62
Clearance Time (s)	7.0	7.0	7.0	7.0	7.0	7.0	7.0	7.0	7.0	7.0	7.0	7.0
Vehicle Extension (s)	4.0	4.0	2.0	2.0	2.0	2.0	2.0	3.0	2.0	2.0	3.0	4.0
Lane Grp Cap (vph)	213	595	431	230	613	757	128	1833	729	933	2852	1039
v/s Ratio Prot	c0.05	0.10	0.00	0.00	c0.14	0.01	0.03	c0.35	0.01	c0.26	0.37	0.00
v/s Ratio Perm			0.01			0.00			0.06			0.04
v/c Ratio	0.76	0.62	0.03	0.07	0.81	0.02	0.48	0.98	0.16	0.95	0.66	0.06
Uniform Delay, d1	55.7	46.6	35.2	52.8	48.0	18.8	53.9	38.2	21.2	43.2	18.5	8.9
Progression Factor	1.00	1.00	1.00	1.00	1.00	1.00	1.00	1.00	1.00	1.00	1.00	1.00
Incremental Delay, d2	15.0	2.2	0.0	0.0	7.6	0.0	1.0	16.7	0.0	18.5	0.6	0.0
Delay (s)	70.7	48.8	35.2	52.8	55.6	18.8	54.9	54.9	21.2	61.6	19.1	8.9
Level of Service	E	D	D	D	E	B	D	D	C	E	B	A
Approach Delay (s)		53.5			54.3			52.8			31.9	
Approach LOS		D			D			D			C	

Intersection Summary			
HCM Average Control Delay	42.9	HCM Level of Service	D
HCM Volume to Capacity ratio	0.89		
Actuated Cycle Length (s)	120.7	Sum of lost time (s)	12.0
Intersection Capacity Utilization	87.8%	ICU Level of Service	E
Analysis Period (min)	15		

c Critical Lane Group

HCM Signalized Intersection Capacity Analysis
13: Nokes Blvd & Atlantic Blvd

Kincora
Total Future 2025

Movement	EBL	EBT	EBR	WBL	WBT	WBR	NBL	NBT	NBR	SBL	SBT	SBR
Lane Configurations												
Ideal Flow (vphpl)	1900	1900	1900	1900	1900	1900	1900	1900	1900	1900	1900	1900
Total Lost time (s)	4.0	4.0	4.0	3.0	4.0	3.0	4.0	3.0	3.0	3.0	3.0	4.0
Lane Util. Factor	0.97	0.95	1.00	0.97	0.95	1.00	0.97	0.95	1.00	0.97	0.95	1.00
Frt	1.00	1.00	0.85	1.00	1.00	0.85	1.00	1.00	0.85	1.00	1.00	0.85
Flt Protected	0.95	1.00	1.00	0.95	1.00	1.00	0.95	1.00	1.00	0.95	1.00	1.00
Satd. Flow (prot)	3433	3539	1583	3433	3539	1583	3433	3539	1583	3433	3539	1583
Flt Permitted	0.95	1.00	1.00	0.95	1.00	1.00	0.95	1.00	1.00	0.95	1.00	1.00
Satd. Flow (perm)	3433	3539	1583	3433	3539	1583	3433	3539	1583	3433	3539	1583
Volume (vph)	458	792	433	223	649	93	1129	346	287	83	206	602
Peak-hour factor, PHF	0.95	0.95	0.95	0.95	0.95	0.95	0.95	0.95	0.95	0.95	0.95	0.95
Adj. Flow (vph)	482	834	456	235	683	98	1188	364	302	87	217	634
RTOR Reduction (vph)	0	0	0	0	0	0	0	0	33	0	0	0
Lane Group Flow (vph)	482	834	456	235	683	98	1188	364	269	87	217	634
Turn Type	Prot		Free	Prot		Free	Prot		pm+ov	Prot		Free
Protected Phases	1	6		5	2		7	4	5	3	8	
Permitted Phases			Free			Free			4			Free
Actuated Green, G (s)	11.5	21.0	100.0	8.1	17.6	100.0	36.0	39.4	47.5	4.0	7.4	100.0
Effective Green, g (s)	14.5	24.0	100.0	12.1	20.6	100.0	39.0	42.9	55.0	8.0	10.9	100.0
Actuated g/C Ratio	0.14	0.24	1.00	0.12	0.21	1.00	0.39	0.43	0.55	0.08	0.11	1.00
Clearance Time (s)	7.0	7.0		7.0	7.0		7.0	6.5	7.0	7.0	6.5	
Vehicle Extension (s)	2.5	4.0		2.5	4.0		2.5	2.5	2.5	2.5	2.5	
Lane Grp Cap (vph)	498	849	1583	415	729	1583	1339	1518	918	275	386	1583
v/s Ratio Prot	c0.14	c0.24		0.07	0.19		c0.35	0.10	0.04	0.03	c0.06	
v/s Ratio Perm			0.29			0.06			0.13			c0.40
v/c Ratio	0.97	0.98	0.29	0.57	0.94	0.06	0.89	0.24	0.29	0.32	0.56	0.40
Uniform Delay, d1	42.5	37.8	0.0	41.5	39.1	0.0	28.4	18.2	12.1	43.4	42.3	0.0
Progression Factor	1.00	1.00	1.00	1.00	1.00	1.00	1.00	1.00	1.00	1.00	1.00	1.00
Incremental Delay, d2	31.8	26.9	0.5	1.4	21.1	0.1	7.4	0.1	0.1	0.5	1.5	0.8
Delay (s)	74.4	64.7	0.5	42.9	60.1	0.1	35.9	18.2	12.2	43.9	43.8	0.8
Level of Service	E	E	A	D	E	A	D	B	B	D	D	A
Approach Delay (s)		50.8			50.3			28.5			14.7	
Approach LOS		D			D			C			B	

Intersection Summary			
HCM Average Control Delay	37.3	HCM Level of Service	D
HCM Volume to Capacity ratio	0.86		
Actuated Cycle Length (s)	100.0	Sum of lost time (s)	11.0
Intersection Capacity Utilization	82.2%	ICU Level of Service	E
Analysis Period (min)	15		

c Critical Lane Group

HCM Signalized Intersection Capacity Analysis
14: Nokes Blvd. & Cascades Parkway

Kincora
Total Future 2025

Movement	EBL	EBT	EBR	WBL	WBT	WBR	NBL	NBT	NBR	SBL	SBT	SBR
Lane Configurations												
Ideal Flow (vphpl)	1900	1900	1900	1900	1900	1900	1900	1900	1900	1900	1900	1900
Total Lost time (s)	3.0	3.0	3.0	3.0	3.0	3.0	3.0	3.0	3.0	3.0	3.0	3.0
Lane Util. Factor	0.97	0.95	1.00	1.00	0.95	1.00	0.97	0.95	1.00	1.00	0.95	1.00
Frt	1.00	1.00	0.85	1.00	1.00	0.85	1.00	1.00	0.85	1.00	1.00	0.85
Flt Protected	0.95	1.00	1.00	0.95	1.00	1.00	0.95	1.00	1.00	0.95	1.00	1.00
Satd. Flow (prot)	3433	3539	1583	1770	3539	1583	3433	3539	1583	1770	3539	1583
Flt Permitted	0.95	1.00	1.00	0.13	1.00	1.00	0.95	1.00	1.00	0.95	1.00	1.00
Satd. Flow (perm)	3433	3539	1583	248	3539	1583	3433	3539	1583	1770	3539	1583
Volume (vph)	329	647	260	238	239	33	244	1406	298	4	1004	258
Peak-hour factor, PHF	0.95	0.95	0.95	0.95	0.95	0.95	0.95	0.95	0.95	0.95	0.95	0.95
Adj. Flow (vph)	346	681	274	251	252	35	257	1480	314	4	1057	272
RTOR Reduction (vph)	0	0	191	0	0	27	0	0	92	0	0	164
Lane Group Flow (vph)	346	681	83	251	252	8	257	1480	222	4	1057	108
Turn Type	Prot		Perm	pm+pt		Perm	Prot		Perm	Prot		Perm
Protected Phases	7	4		3	8		1	6		5	2	
Permitted Phases			4	8		8			6			2
Actuated Green, G (s)	18.0	24.2	24.2	44.0	25.1	25.1	11.7	58.2	58.2	1.8	48.3	48.3
Effective Green, g (s)	22.0	29.2	29.2	53.0	30.1	30.1	15.7	62.7	62.7	5.8	52.8	52.8
Actuated g/C Ratio	0.17	0.22	0.22	0.40	0.23	0.23	0.12	0.47	0.47	0.04	0.40	0.40
Clearance Time (s)	7.0	8.0	8.0	7.0	8.0	8.0	7.0	7.5	7.5	7.0	7.5	7.5
Vehicle Extension (s)	3.0	3.0	3.0	3.0	3.0	3.0	3.0	3.0	3.0	3.0	3.0	3.0
Lane Grp Cap (vph)	570	779	349	362	803	359	406	1673	749	77	1409	630
v/s Ratio Prot	0.10	c0.19		c0.12	0.07		c0.07	c0.42		0.00	0.30	
v/s Ratio Perm			0.05	0.16		0.01			0.14			0.07
v/c Ratio	0.61	0.87	0.24	0.69	0.31	0.02	0.63	0.88	0.30	0.05	0.75	0.17
Uniform Delay, d1	51.3	49.9	42.5	30.8	42.7	39.8	55.7	31.7	21.4	60.8	34.2	25.8
Progression Factor	1.00	1.00	1.00	1.00	1.00	1.00	1.00	1.00	1.00	1.00	1.00	1.00
Incremental Delay, d2	1.8	10.7	0.4	5.7	0.2	0.0	3.2	6.0	0.2	0.3	2.3	0.1
Delay (s)	53.1	60.6	42.9	36.5	42.9	39.8	58.9	37.7	21.6	61.0	36.5	25.9
Level of Service	D	E	D	D	D	D	E	D	C	E	D	C
Approach Delay (s)		54.9			39.7			37.9			34.4	
Approach LOS		D			D			D			C	

Intersection Summary			
HCM Average Control Delay	41.4	HCM Level of Service	D
HCM Volume to Capacity ratio	0.86		
Actuated Cycle Length (s)	132.6	Sum of lost time (s)	15.0
Intersection Capacity Utilization	91.6%	ICU Level of Service	F
Analysis Period (min)	15		

c Critical Lane Group

Movement	EBL	EBR	NBL	NBT	SBT	SBR
Lane Configurations						
Ideal Flow (vphpl)	1900	1900	1900	1900	1900	1900
Total Lost time (s)	3.0	3.0	3.0	3.0	3.0	3.0
Lane Util. Factor	1.00	1.00	1.00	0.95	0.95	1.00
Frt	1.00	0.85	1.00	1.00	1.00	0.85
Flt Protected	0.95	1.00	0.95	1.00	1.00	1.00
Satd. Flow (prot)	1770	1583	1770	3539	3539	1583
Flt Permitted	0.95	1.00	0.07	1.00	1.00	1.00
Satd. Flow (perm)	1770	1583	138	3539	3539	1583
Volume (vph)	211	183	249	1742	1322	116
Peak-hour factor, PHF	0.95	0.95	0.95	0.95	0.95	0.95
Adj. Flow (vph)	222	193	262	1834	1392	122
RTOR Reduction (vph)	0	151	0	0	0	35
Lane Group Flow (vph)	222	42	262	1834	1392	37
Turn Type		Perm	pm+pt			pm+ov
Protected Phases	4		1	6	2	4
Permitted Phases		4	6			2
Actuated Green, G (s)	18.2	18.2	70.8	70.8	47.5	65.7
Effective Green, g (s)	22.2	22.2	74.3	74.3	51.0	73.2
Actuated g/C Ratio	0.22	0.22	0.72	0.72	0.50	0.71
Clearance Time (s)	7.0	7.0	7.0	6.5	6.5	7.0
Vehicle Extension (s)	3.0	3.0	4.0	4.0	4.0	3.0
Lane Grp Cap (vph)	383	343	423	2565	1761	1177
v/s Ratio Prot	c0.13		0.12	c0.52	c0.39	0.02
v/s Ratio Perm		0.03	0.33			0.04
v/c Ratio	0.58	0.12	0.62	0.72	0.79	0.07
Uniform Delay, d1	36.0	32.3	25.0	8.1	21.3	4.4
Progression Factor	1.00	1.00	1.00	1.00	1.00	1.00
Incremental Delay, d2	2.1	0.2	3.1	1.0	2.6	0.0
Delay (s)	38.1	32.5	28.1	9.1	24.0	4.4
Level of Service	D	C	C	A	C	A
Approach Delay (s)	35.5			11.5	22.4	
Approach LOS	D			B	C	

Intersection Summary			
HCM Average Control Delay	18.1	HCM Level of Service	B
HCM Volume to Capacity ratio	0.73		
Actuated Cycle Length (s)	102.5	Sum of lost time (s)	9.0
Intersection Capacity Utilization	72.0%	ICU Level of Service	C
Analysis Period (min)	15		

c Critical Lane Group

Movement	EBL	EBT	EBR	WBL	WBT	WBR	NBL	NBT	NBR	SBL	SBT	SBR
Lane Configurations												
Ideal Flow (vphpl)	1900	1900	1900	1900	1900	1900	1900	1900	1900	1900	1900	1900
Lane Width	12	12	12	12	12	13	12	12	12	12	12	12
Total Lost time (s)	3.0	3.0	3.0	3.0	3.0	3.0	3.0	3.0	3.0	3.0	3.0	3.0
Lane Util. Factor	0.97	0.86	1.00	0.97	0.86	1.00	0.97	0.95	1.00	0.97	0.95	1.00
Frt	1.00	1.00	0.85	1.00	1.00	0.85	1.00	1.00	0.85	1.00	1.00	0.85
Flt Protected	0.95	1.00	1.00	0.95	1.00	1.00	0.95	1.00	1.00	0.95	1.00	1.00
Satd. Flow (prot)	3433	6408	1583	3433	6408	1636	3433	3539	1583	3433	3539	1583
Flt Permitted	0.95	1.00	1.00	0.95	1.00	1.00	0.95	1.00	1.00	0.95	1.00	1.00
Satd. Flow (perm)	3433	6408	1583	3433	6408	1636	3433	3539	1583	3433	3539	1583
Volume (vph)	251	1160	194	216	2758	1246	127	549	106	858	394	260
Peak-hour factor, PHF	0.95	0.95	0.95	0.95	0.95	0.95	0.95	0.95	0.95	0.95	0.95	0.95
Adj. Flow (vph)	264	1221	204	227	2903	1312	134	578	112	903	415	274
RTOR Reduction (vph)	0	0	0	0	0	0	0	0	7	0	0	50
Lane Group Flow (vph)	264	1221	204	227	2903	1312	134	578	105	903	415	224
Turn Type	Prot		Free	Prot		Free	Prot		pm+ov	Prot		pm+ov
Protected Phases	1	6		5	2		3	8	5	7	4	1
Permitted Phases			Free			Free			8			4
Actuated Green, G (s)	5.5	50.9	145.5	12.8	58.2	145.5	10.0	23.3	36.1	31.0	44.3	49.8
Effective Green, g (s)	9.5	54.9	145.5	16.8	62.2	145.5	14.0	26.8	43.6	35.0	47.8	57.3
Actuated g/C Ratio	0.07	0.38	1.00	0.12	0.43	1.00	0.10	0.18	0.30	0.24	0.33	0.39
Clearance Time (s)	7.0	7.0		7.0	7.0		7.0	6.5	7.0	7.0	6.5	7.0
Vehicle Extension (s)	2.0	3.0		2.0	3.0		2.0	2.0	2.0	2.0	2.0	2.0
Lane Grp Cap (vph)	224	2418	1583	396	2739	1636	330	652	507	826	1163	656
v/s Ratio Prot	c0.08	0.19		0.07	c0.45		0.04	0.16	0.02	c0.26	0.12	0.02
v/s Ratio Perm			0.13			c0.80			0.04			0.12
v/c Ratio	1.18	0.50	0.13	0.57	1.06	0.80	0.41	0.89	0.21	1.09	0.36	0.34
Uniform Delay, d1	68.0	34.8	0.0	61.0	41.6	0.0	61.8	57.9	38.0	55.2	37.2	30.9
Progression Factor	1.00	1.00	1.00	1.00	1.00	1.00	1.00	1.00	1.00	1.00	1.00	1.00
Incremental Delay, d2	116.8	0.8	0.2	1.2	35.7	4.3	0.3	13.4	0.1	59.9	0.1	0.1
Delay (s)	184.8	35.6	0.2	62.2	77.4	4.3	62.1	71.3	38.1	115.1	37.2	31.0
Level of Service	F	D	A	E	E	A	E	E	D	F	D	C
Approach Delay (s)		54.6			55.0			65.3			80.3	
Approach LOS		D			D			E			F	

Intersection Summary			
HCM Average Control Delay	60.6	HCM Level of Service	E
HCM Volume to Capacity ratio	1.00		
Actuated Cycle Length (s)	145.5	Sum of lost time (s)	6.0
Intersection Capacity Utilization	100.1%	ICU Level of Service	G
Analysis Period (min)	15		

c Critical Lane Group

Movement	EBL	EBT	EBR	WBL	WBT	WBR	NBL	NBT	NBR	SBL	SBT	SBR
Lane Configurations												
Ideal Flow (vphpl)	1900	1900	1900	1900	1900	1900	1900	1900	1900	1900	1900	1900
Total Lost time (s)	3.0	3.0	3.0	3.0	3.0	3.0	3.0	3.0	3.0	3.0	3.0	3.0
Lane Util. Factor	1.00	0.86	1.00	1.00	0.86	1.00	1.00	0.95	1.00	1.00	0.95	1.00
Frt	1.00	1.00	0.85	1.00	1.00	0.85	1.00	1.00	0.85	1.00	1.00	0.85
Flt Protected	0.95	1.00	1.00	0.95	1.00	1.00	0.95	1.00	1.00	0.95	1.00	1.00
Satd. Flow (prot)	1770	6408	1583	1770	6408	1583	1770	3539	1583	1770	3539	1583
Flt Permitted	0.95	1.00	1.00	0.95	1.00	1.00	0.71	1.00	1.00	0.53	1.00	1.00
Satd. Flow (perm)	1770	6408	1583	1770	6408	1583	1323	3539	1583	983	3539	1583
Volume (vph)	27	2060	110	581	3663	159	147	33	484	272	65	147
Peak-hour factor, PHF	0.95	0.95	0.95	0.95	0.95	0.95	0.95	0.95	0.95	0.95	0.95	0.95
Adj. Flow (vph)	28	2168	116	612	3856	167	155	35	509	286	68	155
RTOR Reduction (vph)	0	0	68	0	0	42	0	0	0	0	0	112
Lane Group Flow (vph)	28	2168	48	612	3856	125	155	35	509	286	68	43
Turn Type	Prot		pm+ov	Prot		pm+ov	pm+pt		Free	pm+pt		Perm
Protected Phases	1	6	3	5	2	7	3	8		7	4	
Permitted Phases			6			2	8		Free	4		4
Actuated Green, G (s)	4.2	34.4	38.4	34.0	64.2	74.6	8.2	4.2	110.0	21.0	10.6	10.6
Effective Green, g (s)	8.2	37.9	45.9	38.0	67.7	82.1	15.7	7.7	110.0	25.1	14.1	14.1
Actuated g/C Ratio	0.07	0.34	0.42	0.35	0.62	0.75	0.14	0.07	1.00	0.23	0.13	0.13
Clearance Time (s)	7.0	6.5	7.0	7.0	6.5	7.0	7.0	6.5		7.0	6.5	6.5
Vehicle Extension (s)	2.0	3.0	2.0	2.0	3.0	2.0	2.0	2.0		2.0	2.0	2.0
Lane Grp Cap (vph)	132	2208	704	611	3944	1225	221	248	1583	327	454	203
v/s Ratio Prot	0.02	0.34	0.01	c0.35	c0.60	0.01	0.05	0.01		c0.11	0.02	
v/s Ratio Perm			0.03			0.07	0.05		0.32	c0.09		0.03
v/c Ratio	0.21	0.98	0.07	1.00	0.98	0.10	0.70	0.14	0.32	0.87	0.15	0.21
Uniform Delay, d1	47.9	35.7	19.2	36.0	20.4	3.8	44.3	48.0	0.0	39.5	42.6	43.0
Progression Factor	1.00	1.00	1.00	1.00	1.00	1.00	1.00	1.00	1.00	1.00	1.00	1.00
Incremental Delay, d2	0.3	15.3	0.0	36.8	10.0	0.0	7.9	0.1	0.5	21.3	0.7	2.4
Delay (s)	48.2	51.0	19.2	72.8	30.4	3.8	52.3	48.1	0.5	60.9	43.3	45.4
Level of Service	D	D	B	E	C	A	D	D	A	E	D	D
Approach Delay (s)		49.4			35.1			14.4			53.8	
Approach LOS		D			D			B			D	

Intersection Summary			
HCM Average Control Delay	38.5	HCM Level of Service	D
HCM Volume to Capacity ratio	0.95		
Actuated Cycle Length (s)	110.0	Sum of lost time (s)	6.0
Intersection Capacity Utilization	93.8%	ICU Level of Service	F
Analysis Period (min)	15		
c Critical Lane Group			

Movement	EBL	EBT	EBR	WBL	WBT	WBR	NBL	NBT	NBR	SBL	SBT	SBR
Lane Configurations												
Ideal Flow (vphpl)	1900	1900	1900	1900	1900	1900	1900	1900	1900	1900	1900	1900
Total Lost time (s)	3.0	3.0	3.0	3.0	3.0	3.0	3.0	3.0	3.0	3.0	3.0	3.0
Lane Util. Factor	0.94	0.86	1.00	0.97	0.86	1.00	0.97	0.95	1.00	0.97	0.95	1.00
Frt	1.00	1.00	0.85	1.00	1.00	0.85	1.00	1.00	0.85	1.00	1.00	0.85
Flt Protected	0.95	1.00	1.00	0.95	1.00	1.00	0.95	1.00	1.00	0.95	1.00	1.00
Satd. Flow (prot)	4990	6408	1583	3433	6408	1583	3433	3539	1583	3433	3539	1583
Flt Permitted	0.95	1.00	1.00	0.95	1.00	1.00	0.95	1.00	1.00	0.95	1.00	1.00
Satd. Flow (perm)	4990	6408	1583	3433	6408	1583	3433	3539	1583	3433	3539	1583
Volume (vph)	760	2580	321	102	4553	358	440	152	675	449	269	1768
Peak-hour factor, PHF	0.95	0.95	0.95	0.95	0.95	0.95	0.95	0.95	0.95	0.95	0.95	0.95
Adj. Flow (vph)	800	2716	338	107	4793	377	463	160	711	473	283	1861
RTOR Reduction (vph)	0	0	0	0	0	0	0	0	0	0	0	0
Lane Group Flow (vph)	800	2716	338	107	4793	377	463	160	711	473	283	1861
Turn Type	Prot		Free	Prot		Free	Prot		Free	Prot		Free
Protected Phases	1	6		5	2		7	4		3	8	
Permitted Phases			Free			Free			Free			Free
Actuated Green, G (s)	15.0	90.5	145.0	6.5	82.0	145.0	13.0	6.0	145.0	14.0	7.0	145.0
Effective Green, g (s)	19.0	94.5	145.0	10.5	86.0	145.0	17.0	10.0	145.0	18.0	11.0	145.0
Actuated g/C Ratio	0.13	0.65	1.00	0.07	0.59	1.00	0.12	0.07	1.00	0.12	0.08	1.00
Clearance Time (s)	7.0	7.0		7.0	7.0		7.0	7.0		7.0	7.0	
Vehicle Extension (s)	2.0	3.0		2.0	3.0		3.0	3.0		3.0	3.0	
Lane Grp Cap (vph)	654	4176	1583	249	3801	1583	402	244	1583	426	268	1583
v/s Ratio Prot	0.16	0.42		0.03	c0.75		0.13	0.05		0.14	0.08	
v/s Ratio Perm			0.21			0.24			0.45			c1.18
v/c Ratio	1.22	0.65	0.21	0.43	1.26	0.24	1.15	0.66	0.45	1.11	1.06	1.18
Uniform Delay, d1	63.0	15.3	0.0	64.4	29.5	0.0	64.0	65.8	0.0	63.5	67.0	72.5
Progression Factor	1.00	1.00	1.00	1.00	1.00	1.00	1.00	1.00	1.00	1.00	1.00	1.00
Incremental Delay, d2	113.8	0.8	0.3	0.4	119.7	0.4	93.2	6.2	0.9	77.0	70.5	86.0
Delay (s)	176.8	16.1	0.3	64.8	149.2	0.4	157.2	72.0	0.9	140.5	137.5	158.5
Level of Service	F	B	A	E	F	A	F	E	A	F	F	F
Approach Delay (s)		48.0			136.8			63.7			153.0	
Approach LOS		D			F			E			F	

Intersection Summary			
HCM Average Control Delay	106.5	HCM Level of Service	F
HCM Volume to Capacity ratio	1.23		
Actuated Cycle Length (s)	145.0	Sum of lost time (s)	3.0
Intersection Capacity Utilization	113.8%	ICU Level of Service	H
Analysis Period (min)	15		
c Critical Lane Group			

Movement	EBL	EBT	EBR	WBL	WBT	WBR	NBL	NBT	NBR	SBL	SBT	SBR
Lane Configurations												
Ideal Flow (vphpl)	1900	1900	1900	1900	1900	1900	1900	1900	1900	1900	1900	1900
Total Lost time (s)	3.0	3.0		3.0	3.0			3.0	3.0		3.0	
Lane Util. Factor	1.00	0.95		1.00	0.95			1.00	1.00		1.00	
Frt	1.00	0.99		1.00	1.00			1.00	0.85		0.94	
Flt Protected	0.95	1.00		0.95	1.00			0.95	1.00		0.98	
Satd. Flow (prot)	1770	3507		1770	3539			1775	1583		1724	
Flt Permitted	0.22	1.00		0.05	1.00			0.72	1.00		0.89	
Satd. Flow (perm)	411	3507		86	3539			1334	1583		1558	
Volume (vph)	25	1967	125	165	1198	0	180	2	262	7	3	7
Peak-hour factor, PHF	0.95	0.95	0.95	0.95	0.95	0.95	0.95	0.95	0.95	0.95	0.95	0.95
Adj. Flow (vph)	26	2071	132	174	1261	0	189	2	276	7	3	7
RTOR Reduction (vph)	0	3	0	0	0	0	0	0	0	0	6	0
Lane Group Flow (vph)	26	2200	0	174	1261	0	0	191	276	0	11	0
Turn Type	Perm			pm+pt			Perm		pm+ov	Perm		
Protected Phases		6		5	2			4	5		8	
Permitted Phases	6			2			4		4	8		
Actuated Green, G (s)	80.9	80.9		94.9	94.9			20.0	28.5		20.0	
Effective Green, g (s)	83.9	83.9		97.9	97.9			23.0	34.0		23.0	
Actuated g/C Ratio	0.66	0.66		0.77	0.77			0.18	0.27		0.18	
Clearance Time (s)	6.0	6.0		5.5	6.0			6.0	5.5		6.0	
Vehicle Extension (s)	4.0	4.0		2.0	4.0			3.0	2.0		3.0	
Lane Grp Cap (vph)	272	2319		212	2730			242	462		282	
v/s Ratio Prot		c0.63		c0.07	0.36				0.05			
v/s Ratio Perm	0.06			0.56				c0.14	0.12		0.01	
v/c Ratio	0.10	0.95		0.82	0.46			0.79	0.60		0.04	
Uniform Delay, d1	7.8	19.5		43.9	5.1			49.6	40.5		42.8	
Progression Factor	1.00	1.00		1.00	1.00			1.00	1.00		1.00	
Incremental Delay, d2	0.2	9.3		20.9	0.2			15.6	1.4		0.1	
Delay (s)	8.0	28.9		64.8	5.3			65.2	41.9		42.9	
Level of Service	A	C		E	A			E	D		D	
Approach Delay (s)		28.6			12.5			51.4			42.9	
Approach LOS		C			B			D			D	

Intersection Summary			
HCM Average Control Delay	25.7	HCM Level of Service	C
HCM Volume to Capacity ratio	0.91		
Actuated Cycle Length (s)	126.9	Sum of lost time (s)	9.0
Intersection Capacity Utilization	94.2%	ICU Level of Service	F
Analysis Period (min)	15		

c Critical Lane Group

Movement	EBL	EBT	WBT	WBR	SBL	SBR
Lane Configurations						
Ideal Flow (vphpl)	1900	1900	1900	1900	1900	1900
Total Lost time (s)	3.0	3.0	3.0	3.0	3.0	3.0
Lane Util. Factor	0.97	0.95	0.91	0.91	0.97	1.00
Frt	1.00	1.00	0.98	0.85	1.00	0.85
Flt Protected	0.95	1.00	1.00	1.00	0.95	1.00
Satd. Flow (prot)	3433	3539	3312	1441	3433	1583
Flt Permitted	0.95	1.00	1.00	1.00	0.95	1.00
Satd. Flow (perm)	3433	3539	3312	1441	3433	1583
Volume (vph)	1251	756	634	863	717	825
Peak-hour factor, PHF	0.95	0.95	0.95	0.95	0.95	0.95
Adj. Flow (vph)	1317	796	667	908	755	868
RTOR Reduction (vph)	0	0	14	4	0	482
Lane Group Flow (vph)	1317	796	775	782	755	386
Turn Type	Prot			pm+ov		Perm
Protected Phases	5	2	6	4	4	
Permitted Phases				6		4
Actuated Green, G (s)	33.0	60.0	20.0	45.5	25.5	25.5
Effective Green, g (s)	37.0	64.0	24.0	54.0	30.0	30.0
Actuated g/C Ratio	0.37	0.64	0.24	0.54	0.30	0.30
Clearance Time (s)	7.0	7.0	7.0	7.5	7.5	7.5
Vehicle Extension (s)	2.0	3.0	3.0	3.0	3.0	3.0
Lane Grp Cap (vph)	1270	2265	795	821	1030	475
v/s Ratio Prot	c0.38	0.22	c0.23	c0.29	0.22	
v/s Ratio Perm				0.26		0.24
v/c Ratio	1.04	0.35	0.97	0.95	0.73	0.81
Uniform Delay, d1	31.5	8.4	37.7	21.8	31.4	32.4
Progression Factor	1.00	1.00	1.00	1.00	1.00	1.00
Incremental Delay, d2	35.4	0.1	25.5	20.7	2.7	10.2
Delay (s)	66.9	8.5	63.2	42.5	34.1	42.6
Level of Service	E	A	E	D	C	D
Approach Delay (s)		44.9	52.8		38.6	
Approach LOS		D	D		D	

Intersection Summary			
HCM Average Control Delay	45.3	HCM Level of Service	D
HCM Volume to Capacity ratio	0.99		
Actuated Cycle Length (s)	100.0	Sum of lost time (s)	6.0
Intersection Capacity Utilization	92.9%	ICU Level of Service	F
Analysis Period (min)	15		

c Critical Lane Group

Movement	EBL	EBT	EBR	WBL	WBT	WBR	NBL	NBT	NBR	SBL	SBT	SBR
Lane Configurations												
Ideal Flow (vphpl)	1900	1900	1900	1900	1900	1900	1900	1900	1900	1900	1900	1900
Total Lost time (s)	4.0		4.0	4.0		4.0	4.0	4.0	4.0	4.0	4.0	4.0
Lane Util. Factor	0.97		1.00	0.97		0.88	0.97	0.95	1.00	0.97	0.95	1.00
Frt	1.00		0.85	1.00		0.85	1.00	1.00	0.85	1.00	1.00	0.85
Flt Protected	0.95		1.00	0.95		1.00	0.95	1.00	1.00	0.95	1.00	1.00
Satd. Flow (prot)	3433		1583	3433		2787	3433	3539	1583	3433	3539	1583
Flt Permitted	0.95		1.00	0.95		1.00	0.95	1.00	1.00	0.95	1.00	1.00
Satd. Flow (perm)	3433		1583	3433		2787	3433	3539	1583	3433	3539	1583
Volume (vph)	354	0	768	257	0	1857	420	1550	117	926	1508	213
Peak-hour factor, PHF	0.95	0.95	0.95	0.95	0.95	0.95	0.95	0.95	0.95	0.95	0.95	0.95
Adj. Flow (vph)	373	0	808	271	0	1955	442	1632	123	975	1587	224
RTOR Reduction (vph)	0	0	0	0	0	0	0	0	40	0	0	56
Lane Group Flow (vph)	373	0	808	271	0	1955	442	1632	83	975	1587	168
Turn Type	Prot		Free	Prot		Free	Prot		pm+ov	Prot		pm+ov
Protected Phases	7	4		3	8		5	2	3	1	6	7
Permitted Phases			Free			Free			2			6
Actuated Green, G (s)	14.0		133.0	14.0		133.0	18.5	63.0	77.0	37.0	81.5	95.5
Effective Green, g (s)	15.0		133.0	15.0		133.0	21.5	66.0	81.0	40.0	84.5	99.5
Actuated g/C Ratio	0.11		1.00	0.11		1.00	0.16	0.50	0.61	0.30	0.64	0.75
Clearance Time (s)	5.0			5.0			7.0	7.0	5.0	7.0	7.0	5.0
Vehicle Extension (s)	2.0			2.0			2.0	3.0	2.0	2.0	3.0	2.0
Lane Grp Cap (vph)	367		1583	387		2787	555	1756	1012	1032	2248	1232
v/s Ratio Prot	c0.11			0.08			0.13	c0.46	0.01	c0.28	0.45	0.02
v/s Ratio Perm			0.51			0.70			0.04			0.09
v/c Ratio	0.96		0.51	0.70		0.70	0.80	0.93	0.08	0.94	0.71	0.14
Uniform Delay, d1	58.7		0.0	56.8		0.0	53.6	31.3	10.7	45.4	16.0	4.7
Progression Factor	1.00		1.00	1.00		1.00	1.00	1.00	1.00	1.00	1.00	1.00
Incremental Delay, d2	35.9		1.2	4.6		1.5	7.3	9.1	0.0	16.1	1.0	0.0
Delay (s)	94.6		1.2	61.5		1.5	60.9	40.5	10.7	61.6	17.1	4.7
Level of Service	F		A	E		A	E	D	B	E	B	A
Approach Delay (s)		30.7			8.8			42.9			31.6	
Approach LOS		C			A			D			C	

Intersection Summary			
HCM Average Control Delay	28.4	HCM Level of Service	C
HCM Volume to Capacity ratio	0.94		
Actuated Cycle Length (s)	133.0	Sum of lost time (s)	12.0
Intersection Capacity Utilization	96.0%	ICU Level of Service	F
Analysis Period (min)	15		

c Critical Lane Group

Movement	EBL	EBT	EBR	WBL	WBT	WBR	NBL	NBT	NBR	SBL	SBT	SBR
Lane Configurations												
Sign Control		Free			Free			Stop			Stop	
Grade		0%			0%			0%			0%	
Volume (veh/h)	0	514	5	0	1273	0	5	0	0	0	0	0
Peak Hour Factor	0.92	0.92	0.92	0.92	0.92	0.92	0.92	0.92	0.92	0.92	0.92	0.92
Hourly flow rate (vph)	0	559	5	0	1384	0	5	0	0	0	0	0
Pedestrians												
Lane Width (ft)												
Walking Speed (ft/s)												
Percent Blockage												
Right turn flare (veh)												
Median type								None			None	
Median storage veh)												
Upstream signal (ft)												
pX, platoon unblocked												
vC, conflicting volume	1384			564			1251	1942	279	1663	1948	692
vC1, stage 1 conf vol												
vC2, stage 2 conf vol												
vCu, unblocked vol	1384			564			1251	1942	279	1663	1948	692
tC, single (s)	4.1			4.1			7.5	6.5	6.9	7.5	6.5	6.9
tC, 2 stage (s)												
tF (s)	2.2			2.2			3.5	4.0	3.3	3.5	4.0	3.3
p0 queue free %	100			100			96	100	100	100	100	100
cM capacity (veh/h)	491			1004			129	64	718	64	64	386

Direction, Lane #	EB 1	EB 2	EB 3	EB 4	WB 1	WB 2	WB 3	WB 4	NB 1	NB 2	SB 1	SB 2
Volume Total	0	279	279	5	0	692	692	0	5	0	0	0
Volume Left	0	0	0	0	0	0	0	0	5	0	0	0
Volume Right	0	0	0	5	0	0	0	0	0	0	0	0
cSH	1700	1700	1700	1700	1700	1700	1700	1700	129	1700	1700	1700
Volume to Capacity	0.00	0.16	0.16	0.00	0.00	0.41	0.41	0.00	0.04	0.00	0.00	0.00
Queue Length 95th (ft)	0	0	0	0	0	0	0	0	3	0	0	0
Control Delay (s)	0.0	0.0	0.0	0.0	0.0	0.0	0.0	0.0	34.1	0.0	0.0	0.0
Lane LOS									D	A	A	A
Approach Delay (s)	0.0				0.0				34.1		0.0	
Approach LOS									D		A	

Intersection Summary			
Average Delay	0.1		
Intersection Capacity Utilization	45.2%	ICU Level of Service	A
Analysis Period (min)	15		

Movement	EBL	EBT	EBR	WBL	WBT	WBR	NBL	NBT	NBR	SBL	SBT	SBR
Lane Configurations												
Ideal Flow (vphpl)	1900	1900	1900	1900	1900	1900	1900	1900	1900	1900	1900	1900
Total Lost time (s)	4.0	4.0		4.0	4.0	4.0		4.0	4.0	4.0	4.0	4.0
Lane Util. Factor	0.97	0.91		0.97	0.95	1.00		0.95	1.00	0.97	0.95	1.00
Frt	1.00	1.00		1.00	1.00	0.85		1.00	0.85	1.00	1.00	0.85
Flt Protected	0.95	1.00		0.95	1.00	1.00		1.00	1.00	0.95	1.00	1.00
Satd. Flow (prot)	3433	5085		3433	3539	1583		3539	1583	3433	3539	1583
Flt Permitted	0.95	1.00		0.95	1.00	1.00		1.00	1.00	0.95	1.00	1.00
Satd. Flow (perm)	3433	5085		3433	3539	1583		3539	1583	3433	3539	1583
Volume (vph)	321	1033	0	145	452	794	0	651	533	1427	1793	463
Peak-hour factor, PHF	0.95	0.95	0.95	0.95	0.95	0.95	0.95	0.95	0.95	0.95	0.95	0.95
Adj. Flow (vph)	338	1087	0	153	476	836	0	685	561	1502	1887	487
RTOR Reduction (vph)	0	0	0	0	0	0	0	0	0	0	0	62
Lane Group Flow (vph)	338	1087	0	153	476	836	0	685	561	1502	1887	425
Turn Type	Prot			Prot		Free	Prot		Free	Prot		pm+ov
Protected Phases	7	4		3	8		5	2		1	6	7
Permitted Phases						Free			Free			6
Actuated Green, G (s)	17.9	33.4		2.0	17.5	135.5		23.0	135.5	51.1	81.1	99.0
Effective Green, g (s)	18.9	34.4		5.0	20.5	135.5		26.0	135.5	54.1	84.1	103.0
Actuated g/C Ratio	0.14	0.25		0.04	0.15	1.00		0.19	1.00	0.40	0.62	0.76
Clearance Time (s)	5.0	5.0		7.0	7.0			7.0		7.0	7.0	5.0
Vehicle Extension (s)	2.0	2.0		2.0	2.0			2.0		2.0	2.0	2.0
Lane Grp Cap (vph)	479	1291		127	535	1583		679	1583	1371	2197	1250
v/s Ratio Prot	0.10	c0.21		c0.04	0.13			c0.19		c0.44	0.53	0.05
v/s Ratio Perm						0.53			0.35			0.22
v/c Ratio	0.71	0.84		1.20	0.89	0.53		1.01	0.35	1.10	0.86	0.34
Uniform Delay, d1	55.6	48.0		65.2	56.4	0.0		54.8	0.0	40.7	20.9	5.3
Progression Factor	1.00	1.00		1.00	1.00	1.00		1.00	1.00	1.00	1.00	1.00
Incremental Delay, d2	3.9	4.9		145.1	16.1	1.3		36.7	0.6	54.8	3.5	0.1
Delay (s)	59.5	52.9		210.3	72.5	1.3		91.5	0.6	95.5	24.3	5.3
Level of Service	E	D		F	E	A		F	A	F	C	A
Approach Delay (s)		54.5			46.2			50.6			49.5	
Approach LOS		D			D			D			D	

Intersection Summary			
HCM Average Control Delay	50.0	HCM Level of Service	D
HCM Volume to Capacity ratio	1.01		
Actuated Cycle Length (s)	135.5	Sum of lost time (s)	16.0
Intersection Capacity Utilization	96.2%	ICU Level of Service	F
Analysis Period (min)	15		

c Critical Lane Group

Movement	WBL	WBR	NBT	NBR	SBL	SBT
Lane Configurations						
Sign Control	Stop		Free			Free
Grade	0%		0%			0%
Volume (veh/h)	0	450	734	193	0	1938
Peak Hour Factor	0.95	0.95	0.95	0.95	0.95	0.95
Hourly flow rate (vph)	0	474	773	203	0	2040
Pedestrians						
Lane Width (ft)						
Walking Speed (ft/s)						
Percent Blockage						
Right turn flare (veh)						
Median type	None					
Median storage veh)						
Upstream signal (ft)			535			850
pX, platoon unblocked	0.50	0.95			0.95	
vC, conflicting volume	1894	488			976	
vC1, stage 1 conf vol						
vC2, stage 2 conf vol						
vCu, unblocked vol	1502	413			925	
tC, single (s)	6.8	6.9			4.1	
tC, 2 stage (s)						
tF (s)	3.5	3.3			2.2	
p0 queue free %	100	15			100	
cM capacity (veh/h)	56	560			700	

Direction, Lane #	WB 1	NB 1	NB 2	SB 1	SB 2
Volume Total	474	515	461	1020	1020
Volume Left	0	0	0	0	0
Volume Right	474	0	203	0	0
cSH	560	1700	1700	1700	1700
Volume to Capacity	0.85	0.30	0.27	0.60	0.60
Queue Length 95th (ft)	224	0	0	0	0
Control Delay (s)	37.1	0.0	0.0	0.0	0.0
Lane LOS	E				
Approach Delay (s)	37.1	0.0		0.0	
Approach LOS	E				

Intersection Summary			
Average Delay	5.0		
Intersection Capacity Utilization	61.0%	ICU Level of Service	B
Analysis Period (min)	15		

Movement	WBL	WBR	NBT	NBR	SBL	SBT
Lane Configurations						
Ideal Flow (vphpl)	1900	1900	1900	1900	1900	1900
Total Lost time (s)	4.0		4.0			4.0
Lane Util. Factor	1.00		0.95			0.95
Frt	0.95		0.99			1.00
Flt Protected	0.97		1.00			1.00
Satd. Flow (prot)	1711		3509			3533
Flt Permitted	0.97		1.00			0.87
Satd. Flow (perm)	1711		3509			3089
Volume (vph)	95	64	751	45	67	1871
Peak-hour factor, PHF	0.95	0.95	0.95	0.95	0.95	0.95
Adj. Flow (vph)	100	67	791	47	71	1969
RTOR Reduction (vph)	18	0	4	0	0	0
Lane Group Flow (vph)	149	0	834	0	0	2040
Turn Type					Perm	
Protected Phases	8		2			6
Permitted Phases					6	
Actuated Green, G (s)	11.4		73.9			73.9
Effective Green, g (s)	14.4		76.9			76.9
Actuated g/C Ratio	0.15		0.77			0.77
Clearance Time (s)	7.0		7.0			7.0
Vehicle Extension (s)	2.0		2.0			2.0
Lane Grp Cap (vph)	248		2717			2392
v/s Ratio Prot	c0.09		0.24			
v/s Ratio Perm						c0.66
v/c Ratio	0.60		0.31			0.85
Uniform Delay, d1	39.8		3.3			7.4
Progression Factor	1.00		1.00			1.00
Incremental Delay, d2	2.8		0.0			3.0
Delay (s)	42.6		3.3			10.5
Level of Service	D		A			B
Approach Delay (s)	42.6		3.3			10.5
Approach LOS	D		A			B

Intersection Summary				
HCM Average Control Delay	10.3	HCM Level of Service		B
HCM Volume to Capacity ratio	0.81			
Actuated Cycle Length (s)	99.3	Sum of lost time (s)		8.0
Intersection Capacity Utilization	95.0%	ICU Level of Service		F
Analysis Period (min)	15			

c Critical Lane Group

Movement	WBL	WBR	NBT	NBR	SBL	SBT
Lane Configurations						
Sign Control	Stop		Free			Free
Grade	0%		0%			0%
Volume (veh/h)	0	11	1709	56	0	3683
Peak Hour Factor	0.95	0.95	0.95	0.95	0.95	0.95
Hourly flow rate (vph)	0	12	1799	59	0	3877
Pedestrians						
Lane Width (ft)						
Walking Speed (ft/s)						
Percent Blockage						
Right turn flare (veh)						
Median type	None					
Median storage veh)						
Upstream signal (ft)			844			
pX, platoon unblocked	0.82	0.82			0.82	
vC, conflicting volume	3767	929			1858	
vC1, stage 1 conf vol						
vC2, stage 2 conf vol						
vCu, unblocked vol	4148	698			1827	
tC, single (s)	6.8	6.9			4.1	
tC, 2 stage (s)						
tF (s)	3.5	3.3			2.2	
p0 queue free %	100	96			100	
cM capacity (veh/h)	1	315			272	

Direction, Lane #	WB 1	NB 1	NB 2	SB 1	SB 2
Volume Total	12	1199	659	1938	1938
Volume Left	0	0	0	0	0
Volume Right	12	0	59	0	0
cSH	315	1700	1700	1700	1700
Volume to Capacity	0.04	0.71	0.39	1.14	1.14
Queue Length 95th (ft)	3	0	0	0	0
Control Delay (s)	16.9	0.0	0.0	0.0	0.0
Lane LOS	C				
Approach Delay (s)	16.9	0.0		0.0	
Approach LOS	C				

Intersection Summary			
Average Delay	0.0		
Intersection Capacity Utilization	105.1%	ICU Level of Service	G
Analysis Period (min)	15		

Movement	WBL	WBR	NBT	NBR	SBL	SBT
Lane Configurations						
Sign Control	Stop		Free			Free
Grade	0%		0%			0%
Volume (veh/h)	0	11	1664	56	0	3683
Peak Hour Factor	0.95	0.95	0.95	0.95	0.95	0.95
Hourly flow rate (vph)	0	12	1752	59	0	3877
Pedestrians						
Lane Width (ft)						
Walking Speed (ft/s)						
Percent Blockage						
Right turn flare (veh)						
Median type	None					
Median storage veh)						
Upstream signal (ft)						
pX, platoon unblocked						
vC, conflicting volume	3719	905			1811	
vC1, stage 1 conf vol						
vC2, stage 2 conf vol						
vCu, unblocked vol	3719	905			1811	
tC, single (s)	6.8	6.9			4.1	
tC, 2 stage (s)						
tF (s)	3.5	3.3			2.2	
p0 queue free %	100	96			100	
cM capacity (veh/h)	3	279			336	

Direction, Lane #	WB 1	NB 1	NB 2	SB 1	SB 2
Volume Total	12	1168	643	1938	1938
Volume Left	0	0	0	0	0
Volume Right	12	0	59	0	0
cSH	279	1700	1700	1700	1700
Volume to Capacity	0.04	0.69	0.38	1.14	1.14
Queue Length 95th (ft)	3	0	0	0	0
Control Delay (s)	18.4	0.0	0.0	0.0	0.0
Lane LOS	C				
Approach Delay (s)	18.4	0.0		0.0	
Approach LOS	C				

Intersection Summary			
Average Delay	0.0		
Intersection Capacity Utilization	105.1%	ICU Level of Service	G
Analysis Period (min)	15		

Movement	EBL	EBT	EBR	WBL	WBT	WBR	NBL	NBT	NBR	SBL	SBT	SBR
Lane Configurations												
Sign Control		Stop			Stop			Free			Free	
Grade		0%			0%			0%			0%	
Volume (veh/h)	0	0	482	0	0	11	0	1652	22	0	3201	115
Peak Hour Factor	0.95	0.95	0.95	0.95	0.95	0.95	0.95	0.95	0.95	0.95	0.95	0.95
Hourly flow rate (vph)	0	0	507	0	0	12	0	1739	23	0	3369	121
Pedestrians												
Lane Width (ft)												
Walking Speed (ft/s)												
Percent Blockage												
Right turn flare (veh)												
Median type		None			None							
Median storage veh)												
Upstream signal (ft)												
pX, platoon unblocked												
vC, conflicting volume	4311	5192	1745	3435	5241	881	3491			1762		
vC1, stage 1 conf vol												
vC2, stage 2 conf vol												
vCu, unblocked vol	4311	5192	1745	3435	5241	881	3491			1762		
tC, single (s)	7.5	6.5	*5.2	7.5	6.5	6.9	4.1			4.1		
tC, 2 stage (s)												
tF (s)	3.5	4.0	3.3	3.5	4.0	3.3	2.2			2.2		
p0 queue free %	100	100	0	0	100	98	100			100		
cM capacity (veh/h)	1	0	175	0	0	290	71			350		

Direction, Lane #	EB 1	WB 1	NB 1	NB 2	SB 1	SB 2
Volume Total	507	12	1159	603	2246	1244
Volume Left	0	0	0	0	0	0
Volume Right	507	12	0	23	0	121
cSH	175	290	1700	1700	1700	1700
Volume to Capacity	2.89	0.04	0.68	0.35	1.32	0.73
Queue Length 95th (ft)	1142	3	0	0	0	0
Control Delay (s)	907.8	17.9	0.0	0.0	0.0	0.0
Lane LOS	F	C				
Approach Delay (s)	907.8	17.9	0.0		0.0	
Approach LOS	F	C				

Intersection Summary			
Average Delay	79.8		
Intersection Capacity Utilization	128.7%	ICU Level of Service	H
Analysis Period (min)	15		

* User Entered Value

Movement	EBL	EBR	NBL	NBT	SBT	SBR
Lane Configurations						
Sign Control	Stop			Free	Free	
Grade	0%			0%	0%	
Volume (veh/h)	0	493	0	1663	2824	137
Peak Hour Factor	0.95	0.95	0.95	0.95	0.95	0.95
Hourly flow rate (vph)	0	519	0	1751	2973	144
Pedestrians						
Lane Width (ft)						
Walking Speed (ft/s)						
Percent Blockage						
Right turn flare (veh)						
Median type	None					
Median storage veh)						
Upstream signal (ft)					936	
pX, platoon unblocked	0.50	0.50	0.50			
vC, conflicting volume	3848	1486	3117			
vC1, stage 1 conf vol						
vC2, stage 2 conf vol						
vCu, unblocked vol	5679	977	4224			
tC, single (s)	6.8	*5.2	4.1			
tC, 2 stage (s)						
tF (s)	3.5	3.3	2.2			
p0 queue free %	100	0	100			
cM capacity (veh/h)	0	201	18			

Direction, Lane #	EB 1	NB 1	NB 2	SB 1	SB 2	SB 3
Volume Total	519	875	875	1486	1486	144
Volume Left	0	0	0	0	0	0
Volume Right	519	0	0	0	0	144
cSH	201	1700	1700	1700	1700	1700
Volume to Capacity	2.58	0.51	0.51	0.87	0.87	0.08
Queue Length 95th (ft)	1103	0	0	0	0	0
Control Delay (s)	760.2	0.0	0.0	0.0	0.0	0.0
Lane LOS	F					
Approach Delay (s)	760.2	0.0		0.0		
Approach LOS	F					

Intersection Summary				
Average Delay	73.2			
Intersection Capacity Utilization	115.3%	ICU Level of Service		H
Analysis Period (min)	15			

* User Entered Value

Movement	EBL	EBR	NBL	NBT	SBT	SBR
Lane Configurations						
Ideal Flow (vphpl)	1900	1900	1900	1900	1900	1900
Total Lost time (s)	4.0	4.0	4.0	4.0	4.0	
Lane Util. Factor	1.00	1.00	1.00	0.95	0.91	
Frt	1.00	0.85	1.00	1.00	1.00	
Flt Protected	0.95	1.00	0.95	1.00	1.00	
Satd. Flow (prot)	1770	1583	1770	3539	5071	
Flt Permitted	0.95	1.00	0.09	1.00	1.00	
Satd. Flow (perm)	1770	1583	162	3539	5071	
Volume (vph)	281	681	337	1326	2279	45
Peak-hour factor, PHF	0.95	0.95	0.95	0.95	0.95	0.95
Adj. Flow (vph)	296	717	355	1396	2399	47
RTOR Reduction (vph)	0	1	0	0	2	0
Lane Group Flow (vph)	296	716	355	1396	2444	0
Turn Type		pt+ov	pm+pt			
Protected Phases	4	4 5	5	2	6	
Permitted Phases			2			
Actuated Green, G (s)	20.0	37.0	56.0	56.0	39.0	
Effective Green, g (s)	23.0	40.0	59.0	59.0	42.0	
Actuated g/C Ratio	0.26	0.44	0.66	0.66	0.47	
Clearance Time (s)	7.0		7.0	7.0	7.0	
Vehicle Extension (s)	2.0		2.0	2.0	2.0	
Lane Grp Cap (vph)	452	704	338	2320	2366	
v/s Ratio Prot	0.17	c0.45	0.15	0.39	0.48	
v/s Ratio Perm			c0.54			
v/c Ratio	0.65	1.02	1.05	0.60	1.03	
Uniform Delay, d1	30.0	25.0	40.7	8.8	24.0	
Progression Factor	1.00	1.00	1.00	1.00	1.00	
Incremental Delay, d2	2.6	38.4	62.7	0.3	27.6	
Delay (s)	32.6	63.4	103.5	9.1	51.6	
Level of Service	C	E	F	A	D	
Approach Delay (s)	54.4			28.2	51.6	
Approach LOS	D			C	D	

Intersection Summary				
HCM Average Control Delay	44.3	HCM Level of Service		D
HCM Volume to Capacity ratio	1.02			
Actuated Cycle Length (s)	90.0	Sum of lost time (s)		4.0
Intersection Capacity Utilization	93.9%	ICU Level of Service		F
Analysis Period (min)	15			
c Critical Lane Group				

Movement	EBL	EBR	NBL	NBT	SBT	SBR
Lane Configurations						
Ideal Flow (vphpl)	1900	1900	1900	1900	1900	1900
Total Lost time (s)	4.0	4.0	4.0	4.0	4.0	4.0
Lane Util. Factor	1.00	1.00	1.00	0.95	0.95	1.00
Frt	1.00	0.85	1.00	1.00	1.00	0.85
Flt Protected	0.95	1.00	0.95	1.00	1.00	1.00
Satd. Flow (prot)	1770	1583	1770	3539	3539	1583
Flt Permitted	0.95	1.00	0.09	1.00	1.00	1.00
Satd. Flow (perm)	1770	1583	159	3539	3539	1583
Volume (vph)	336	679	414	1192	1646	67
Peak-hour factor, PHF	0.95	0.95	0.95	0.95	0.95	0.95
Adj. Flow (vph)	354	715	436	1255	1733	71
RTOR Reduction (vph)	0	0	0	0	0	23
Lane Group Flow (vph)	354	715	436	1255	1733	48
Turn Type		Free	pm+pt			pm+ov
Protected Phases	4		5	2	6	4
Permitted Phases		Free	2			6
Actuated Green, G (s)	15.0	90.0	61.0	61.0	40.0	55.0
Effective Green, g (s)	18.0	90.0	64.0	64.0	43.0	61.0
Actuated g/C Ratio	0.20	1.00	0.71	0.71	0.48	0.68
Clearance Time (s)	7.0		7.0	7.0	7.0	7.0
Vehicle Extension (s)	2.0		2.0	2.0	2.0	2.0
Lane Grp Cap (vph)	354	1583	417	2517	1691	1143
v/s Ratio Prot	c0.20		c0.20	0.35	0.49	0.01
v/s Ratio Perm		0.45	c0.55			0.02
v/c Ratio	1.00	0.45	1.05	0.50	1.02	0.04
Uniform Delay, d1	36.0	0.0	38.7	5.8	23.5	4.8
Progression Factor	1.00	1.00	1.00	1.00	1.00	1.00
Incremental Delay, d2	47.8	0.9	56.5	0.1	28.4	0.0
Delay (s)	83.8	0.9	95.2	5.9	51.9	4.8
Level of Service	F	A	F	A	D	A
Approach Delay (s)	28.4			28.9	50.1	
Approach LOS	C			C	D	

Intersection Summary			
HCM Average Control Delay	37.2	HCM Level of Service	D
HCM Volume to Capacity ratio	1.02		
Actuated Cycle Length (s)	90.0	Sum of lost time (s)	8.0
Intersection Capacity Utilization	97.1%	ICU Level of Service	F
Analysis Period (min)	15		

c Critical Lane Group

Movement	EBL	EBR	NBL	NBT	SBT	SBR
Lane Configurations						
Ideal Flow (vphpl)	1900	1900	1900	1900	1900	1900
Total Lost time (s)	4.0	4.0	4.0	4.0	4.0	
Lane Util. Factor	1.00	1.00	1.00	0.95	0.95	
Frt	1.00	0.85	1.00	1.00	0.99	
Flt Protected	0.95	1.00	0.95	1.00	1.00	
Satd. Flow (prot)	1770	1583	1770	3539	3512	
Flt Permitted	0.95	1.00	0.11	1.00	1.00	
Satd. Flow (perm)	1770	1583	207	3539	3512	
Volume (vph)	286	679	414	1115	1033	55
Peak-hour factor, PHF	0.95	0.95	0.95	0.95	0.95	0.95
Adj. Flow (vph)	301	715	436	1174	1087	58
RTOR Reduction (vph)	0	11	0	0	4	0
Lane Group Flow (vph)	301	704	436	1174	1141	0
Turn Type		pm+ov	pm+pt			
Protected Phases	4	5	5	2	6	
Permitted Phases		4	2			
Actuated Green, G (s)	14.2	34.8	56.6	56.6	29.0	
Effective Green, g (s)	17.2	40.8	59.6	59.6	32.0	
Actuated g/C Ratio	0.20	0.48	0.70	0.70	0.38	
Clearance Time (s)	7.0	7.0	7.0	7.0	7.0	
Vehicle Extension (s)	2.0	2.0	2.0	2.0	2.0	
Lane Grp Cap (vph)	359	836	580	2487	1325	
v/s Ratio Prot	0.17	c0.23	0.21	0.33	c0.32	
v/s Ratio Perm		0.21	0.32			
v/c Ratio	0.84	0.84	0.75	0.47	0.86	
Uniform Delay, d1	32.5	19.2	19.8	5.6	24.3	
Progression Factor	1.00	1.00	1.00	1.00	1.00	
Incremental Delay, d2	15.0	7.4	4.9	0.1	5.8	
Delay (s)	47.4	26.6	24.7	5.7	30.1	
Level of Service	D	C	C	A	C	
Approach Delay (s)	32.7			10.8	30.1	
Approach LOS	C			B	C	

Intersection Summary			
HCM Average Control Delay	22.6	HCM Level of Service	C
HCM Volume to Capacity ratio	0.85		
Actuated Cycle Length (s)	84.8	Sum of lost time (s)	8.0
Intersection Capacity Utilization	79.1%	ICU Level of Service	D
Analysis Period (min)	15		

c Critical Lane Group

Movement	EBL	EBT	WBT	WBR	SWL	SWR
Lane Configurations		↑↑	↑↑			↱↑
Sign Control		Free	Free		Stop	
Grade		0%	0%		0%	
Volume (veh/h)	0	2984	704	0	0	687
Peak Hour Factor	0.95	0.95	0.95	0.95	0.95	0.95
Hourly flow rate (vph)	0	3141	741	0	0	723
Pedestrians						
Lane Width (ft)						
Walking Speed (ft/s)						
Percent Blockage						
Right turn flare (veh)						
Median type					None	
Median storage veh)						
Upstream signal (ft)		411				
pX, platoon unblocked					0.77	
vC, conflicting volume	741				2312	371
vC1, stage 1 conf vol						
vC2, stage 2 conf vol						
vCu, unblocked vol	741				2404	371
tC, single (s)	4.1				6.8	6.9
tC, 2 stage (s)						
tF (s)	2.2				3.5	3.3
p0 queue free %	100				100	0
cM capacity (veh/h)	862				21	627

Direction, Lane #	EB 1	EB 2	WB 1	WB 2	SW 1	SW 2
Volume Total	1571	1571	371	371	362	362
Volume Left	0	0	0	0	0	0
Volume Right	0	0	0	0	362	362
cSH	1700	1700	1700	1700	627	627
Volume to Capacity	0.92	0.92	0.22	0.22	0.58	0.58
Queue Length 95th (ft)	0	0	0	0	92	92
Control Delay (s)	0.0	0.0	0.0	0.0	18.3	18.3
Lane LOS					C	C
Approach Delay (s)	0.0		0.0		18.3	
Approach LOS					C	

Intersection Summary				
Average Delay	2.9			
Intersection Capacity Utilization	85.8%	ICU Level of Service	E	
Analysis Period (min)	15			

Movement	EBL	EBR	NBL	NBT	SBT	SBR
Lane Configurations	↰	↱	↰	↑↑	↑↑	
Ideal Flow (vphpl)	1900	1900	1900	1900	1900	1900
Total Lost time (s)	4.0	4.0	4.0	4.0	4.0	
Lane Util. Factor	1.00	1.00	1.00	0.95	0.95	
Frt	1.00	0.86	1.00	1.00	0.97	
Flt Protected	0.95	1.00	0.95	1.00	1.00	
Satd. Flow (prot)	1770	1611	1770	3539	3440	
Flt Permitted	0.95	1.00	0.26	1.00	1.00	
Satd. Flow (perm)	1770	1611	491	3539	3440	
Volume (vph)	286	670	276	1126	418	96
Peak-hour factor, PHF	0.95	0.95	0.95	0.95	0.95	0.95
Adj. Flow (vph)	301	705	291	1185	440	101
RTOR Reduction (vph)	0	51	0	0	21	0
Lane Group Flow (vph)	301	654	291	1185	520	0
Turn Type		pm+ov	pm+pt			
Protected Phases	4	5	5	2	6	
Permitted Phases		4	2			
Actuated Green, G (s)	15.7	29.5	35.3	35.3	14.5	
Effective Green, g (s)	18.7	35.5	38.3	38.3	17.5	
Actuated g/C Ratio	0.29	0.55	0.59	0.59	0.27	
Clearance Time (s)	7.0	7.0	7.0	7.0	7.0	
Vehicle Extension (s)	2.0	2.0	2.0	2.0	2.0	
Lane Grp Cap (vph)	509	979	620	2085	926	
v/s Ratio Prot	0.17	c0.17	0.12	c0.33	0.15	
v/s Ratio Perm		0.23	0.16			
v/c Ratio	0.59	0.67	0.47	0.57	0.56	
Uniform Delay, d1	19.9	10.5	7.5	8.2	20.4	
Progression Factor	1.00	1.00	1.00	1.00	1.00	
Incremental Delay, d2	1.2	1.4	0.2	0.2	0.5	
Delay (s)	21.1	11.9	7.7	8.5	20.9	
Level of Service	C	B	A	A	C	
Approach Delay (s)	14.6			8.3	20.9	
Approach LOS	B			A	C	

Intersection Summary				
HCM Average Control Delay	12.7	HCM Level of Service	B	
HCM Volume to Capacity ratio	0.62			
Actuated Cycle Length (s)	65.0	Sum of lost time (s)	4.0	
Intersection Capacity Utilization	62.8%	ICU Level of Service	B	
Analysis Period (min)	15			
c Critical Lane Group				

Movement	NBL	NBT	SBT	SBR	NEL	NER
Lane Configurations						
Ideal Flow (vphpl)	1900	1900	1900	1900	1900	1900
Total Lost time (s)						
Lane Util. Factor						
Frt						
Flt Protected						
Satd. Flow (prot)						
Flt Permitted						
Satd. Flow (perm)						
Volume (vph)	0	0	0	0	0	0
Peak-hour factor, PHF	0.95	0.95	0.95	0.95	0.95	0.95
Adj. Flow (vph)	0	0	0	0	0	0
RTOR Reduction (vph)	0	0	0	0	0	0
Lane Group Flow (vph)	0	0	0	0	0	0
Turn Type						
Protected Phases						
Permitted Phases						
Actuated Green, G (s)						
Effective Green, g (s)						
Actuated g/C Ratio						
Clearance Time (s)						
Lane Grp Cap (vph)						
v/s Ratio Prot						
v/s Ratio Perm						
v/c Ratio						
Uniform Delay, d1						
Progression Factor						
Incremental Delay, d2						
Delay (s)						
Level of Service						
Approach Delay (s)		0.0	0.0		0.0	
Approach LOS		A	A		A	

Intersection Summary			
HCM Average Control Delay	0.0	HCM Level of Service	A
HCM Volume to Capacity ratio	0.00		
Actuated Cycle Length (s)	80.0	Sum of lost time (s)	0.0
Intersection Capacity Utilization	0.0%	ICU Level of Service	A
Analysis Period (min)	15		
c Critical Lane Group			

HCM Signalized Intersection Capacity Analysis
11: Smith Switch Road & Loudoun County Parkway

Kincora
Total Future 2025

Movement	EBL	EBT	EBR	WBL	WBT	WBR	NBL	NBT	NBR	SBL	SBT	SBR
Lane Configurations												
Ideal Flow (vphpl)	1900	1900	1900	1900	1900	1900	1900	1900	1900	1900	1900	1900
Total Lost time (s)	4.0	4.0	4.0	4.0	4.0	4.0	4.0	4.0	4.0	4.0	4.0	4.0
Lane Util. Factor	0.97	0.95	1.00	0.97	0.95	1.00	1.00	0.91	1.00	0.97	0.91	1.00
Frt	1.00	1.00	0.85	1.00	1.00	0.85	1.00	1.00	0.85	1.00	1.00	0.85
Flt Protected	0.95	1.00	1.00	0.95	1.00	1.00	0.95	1.00	1.00	0.95	1.00	1.00
Satd. Flow (prot)	3433	3539	1583	3433	3539	1583	1770	5085	1583	3433	5085	1583
Flt Permitted	0.95	1.00	1.00	0.95	1.00	1.00	0.95	1.00	1.00	0.95	1.00	1.00
Satd. Flow (perm)	3433	3539	1583	3433	3539	1583	1770	5085	1583	3433	5085	1583
Volume (vph)	102	492	5	9	344	459	11	909	10	451	847	70
Peak-hour factor, PHF	0.95	0.95	0.95	0.95	0.95	0.95	0.95	0.95	0.95	0.95	0.95	0.95
Adj. Flow (vph)	107	518	5	9	362	483	12	957	11	475	892	74
RTOR Reduction (vph)	0	0	3	0	0	30	0	0	7	0	0	33
Lane Group Flow (vph)	107	518	2	9	362	453	12	957	4	475	892	41
Turn Type	Prot		pm+ov	Prot		pm+ov	Prot		pm+ov	Prot		pm+ov
Protected Phases	7	4	5	3	8	1	5	2	3	1	6	7
Permitted Phases			4			8			2			6
Actuated Green, G (s)	5.9	23.0	26.2	1.7	18.8	36.6	3.2	29.0	30.7	17.8	43.6	49.5
Effective Green, g (s)	8.9	26.0	32.2	4.7	21.8	42.6	6.2	32.0	36.7	20.8	46.6	55.5
Actuated g/C Ratio	0.09	0.26	0.32	0.05	0.22	0.43	0.06	0.32	0.37	0.21	0.47	0.56
Clearance Time (s)	7.0	7.0	7.0	7.0	7.0	7.0	7.0	7.0	7.0	7.0	7.0	7.0
Vehicle Extension (s)	4.0	4.0	2.0	2.0	2.0	2.0	2.0	3.0	2.0	2.0	3.0	4.0
Lane Grp Cap (vph)	307	925	576	162	775	741	110	1635	648	718	2382	947
v/s Ratio Prot	c0.03	c0.15	0.00	0.00	0.10	c0.13	0.01	c0.19	0.00	c0.14	0.18	0.00
v/s Ratio Perm			0.00			0.16			0.00			0.02
v/c Ratio	0.35	0.56	0.00	0.06	0.47	0.61	0.11	0.59	0.01	0.66	0.37	0.04
Uniform Delay, d1	42.6	31.8	22.8	45.3	33.8	22.0	44.0	28.2	19.9	36.1	17.1	10.0
Progression Factor	1.00	1.00	1.00	1.00	1.00	1.00	1.00	1.00	1.00	1.00	1.00	1.00
Incremental Delay, d2	0.9	0.9	0.0	0.1	0.2	1.1	0.2	0.5	0.0	1.8	0.1	0.0
Delay (s)	43.5	32.7	22.8	45.3	34.0	23.1	44.2	28.7	19.9	37.9	17.2	10.0
Level of Service	D	C	C	D	C	C	D	C	B	D	B	A
Approach Delay (s)		34.5			27.9			28.8			23.6	
Approach LOS		C			C			C			C	

Intersection Summary

HCM Average Control Delay	27.6	HCM Level of Service	C
HCM Volume to Capacity ratio	0.61		
Actuated Cycle Length (s)	99.5	Sum of lost time (s)	16.0
Intersection Capacity Utilization	60.7%	ICU Level of Service	B
Analysis Period (min)	15		

c Critical Lane Group

HCM Signalized Intersection Capacity Analysis
21: Waxpool Road & Pacific Blvd

Kincora
Total Future 2025

Movement	EBL	EBT	EBR	WBL	WBT	WBR	NBL	NBT	NBR	SBL	SBT	SBR
Lane Configurations												
Ideal Flow (vphpl)	1900	1900	1900	1900	1900	1900	1900	1900	1900	1900	1900	1900
Total Lost time (s)	3.0	3.0	3.0	3.0	3.0	3.0	3.0	3.0	3.0	3.0	3.0	3.0
Lane Util. Factor	0.94	0.86	1.00	0.97	0.86	1.00	0.97	0.95	1.00	0.97	0.95	1.00
Frt	1.00	1.00	0.85	1.00	1.00	0.85	1.00	1.00	0.85	1.00	1.00	0.85
Flt Protected	0.95	1.00	1.00	0.95	1.00	1.00	0.95	1.00	1.00	0.95	1.00	1.00
Satd. Flow (prot)	4990	6408	1583	3433	6408	1583	3433	3539	1583	3433	3539	1583
Flt Permitted	0.95	1.00	1.00	0.95	1.00	1.00	0.95	1.00	1.00	0.95	1.00	1.00
Satd. Flow (perm)	4990	6408	1583	3433	6408	1583	3433	3539	1583	3433	3539	1583
Volume (vph)	1178	1707	168	25	1338	863	189	183	30	750	116	1155
Peak-hour factor, PHF	0.95	0.95	0.95	0.95	0.95	0.95	0.95	0.95	0.95	0.95	0.95	0.95
Adj. Flow (vph)	1240	1797	177	28	1408	908	199	193	32	789	122	1216
RTOR Reduction (vph)	0	0	0	0	0	0	0	0	0	0	0	0
Lane Group Flow (vph)	1240	1797	177	26	1408	908	199	193	32	789	122	1216
Turn Type	Prot		Free	Prot		Free	Prot		Free	Prot		Free
Protected Phases	1	6		5	2		7	4		3	8	
Permitted Phases			Free			Free			Free			Free
Actuated Green, G (s)	29.0	56.7	120.0	3.3	31.0	120.0	8.0	5.1	120.0	26.9	24.0	120.0
Effective Green, g (s)	33.0	60.7	120.0	7.3	35.0	120.0	12.0	9.1	120.0	30.9	28.0	120.0
Actuated g/C Ratio	0.28	0.51	1.00	0.06	0.29	1.00	0.10	0.08	1.00	0.26	0.23	1.00
Clearance Time (s)	7.0	7.0		7.0	7.0		7.0	7.0		7.0	7.0	
Vehicle Extension (s)	2.0	3.0		2.0	3.0		3.0	3.0		3.0	3.0	
Lane Grp Cap (vph)	1372	3241	1583	209	1869	1583	343	268	1583	884	826	1583
v/s Ratio Prot	c0.25	0.28		0.01	0.22		0.06	0.05		c0.23	0.03	
v/s Ratio Perm			0.11			0.57			0.02			c0.77
v/c Ratio	0.90	0.55	0.11	0.12	0.75	0.57	0.58	0.72	0.02	0.89	0.15	0.77
Uniform Delay, d1	42.0	20.4	0.0	53.3	38.6	0.0	51.6	54.2	0.0	42.9	38.5	0.0
Progression Factor	1.00	1.00	1.00	1.00	1.00	1.00	1.00	1.00	1.00	1.00	1.00	1.00
Incremental Delay, d2	8.5	0.7	0.1	0.1	2.9	1.5	2.5	9.2	0.0	11.3	0.1	3.6
Delay (s)	50.4	21.1	0.1	53.4	41.4	1.5	54.1	63.4	0.0	54.2	36.6	3.6
Level of Service	D	C	A	D	D	A	D	E	A	D	D	A
Approach Delay (s)		31.2			26.1			54.2			24.3	
Approach LOS		C			C			D			C	

Intersection Summary

HCM Average Control Delay	29.1	HCM Level of Service	C
HCM Volume to Capacity ratio	0.81		
Actuated Cycle Length (s)	120.0	Sum of lost time (s)	0.0
Intersection Capacity Utilization	81.6%	ICU Level of Service	D
Analysis Period (min)	15		

c Critical Lane Group

HCM Signalized Intersection Capacity Analysis
26: Gloucester Pkwy & Pacific Blvd

Kincora
Total Future 2025

Movement	EBL	EBT	EBR	WBL	WBT	WBR	NBL	NBT	NBR	SBL	SBT	SBR
Lane Configurations												
Ideal Flow (vphpl)	1900	1900	1900	1900	1900	1900	1900	1900	1900	1900	1900	1900
Total Lost time (s)	4.0	4.0		4.0	4.0	4.0	4.0	4.0	4.0	4.0	4.0	4.0
Lane Util. Factor	0.97	0.91		1.00	0.95	1.00	1.00	0.95	1.00	0.97	0.95	1.00
Frt	1.00	1.00		1.00	1.00	0.85	1.00	1.00	0.85	1.00	1.00	0.85
Flt Protected	0.95	1.00		0.95	1.00	1.00	0.95	1.00	1.00	0.95	1.00	1.00
Satd. Flow (prot)	3433	5084		1770	3539	1583	1770	3539	1583	3433	3539	1583
Flt Permitted	0.95	1.00		0.95	1.00	1.00	0.95	1.00	1.00	0.95	1.00	1.00
Satd. Flow (perm)	3433	5084		1770	3539	1583	1770	3539	1583	3433	3539	1583
Volume (vph)	517	694	1	98	446	799	1	817	180	561	590	339
Peak-hour factor, PHF	0.95	0.95	0.95	0.95	0.95	0.95	0.95	0.95	0.95	0.95	0.95	0.95
Adj. Flow (vph)	544	731	1	103	469	841	1	860	189	591	621	357
RTOR Reduction (vph)	0	0	0	0	0	0	0	0	16	0	0	65
Lane Group Flow (vph)	544	732	0	103	469	841	1	860	173	591	621	292
Turn Type	Prot			Prot		Free	Prot		pm+ov	Prot		pm+ov
Protected Phases	7	4		3	8		5	2	3	1	6	7
Permitted Phases						Free			2			6
Actuated Green, G (s)	21.4	28.9		9.3	16.8	121.4	0.7	35.2	44.5	22.0	58.5	79.9
Effective Green, g (s)	22.4	29.9		12.3	19.8	121.4	1.7	38.2	50.5	25.0	61.5	83.9
Actuated g/C Ratio	0.18	0.25		0.10	0.16	1.00	0.01	0.31	0.42	0.21	0.51	0.69
Clearance Time (s)	5.0	5.0		7.0	7.0		5.0	7.0	7.0	7.0	7.0	5.0
Vehicle Extension (s)	2.0	2.0		2.0	2.0		2.0	2.0	2.0	2.0	2.0	2.0
Lane Grp Cap (vph)	633	1252		179	577	1583	25	1114	711	707	1793	1146
v/s Ratio Prot	c0.16	0.14		0.06	c0.13		0.00	c0.24	0.02	c0.17	0.18	0.05
v/s Ratio Perm						c0.53			0.08			0.14
v/c Ratio	0.86	0.58		0.58	0.81	0.53	0.04	0.77	0.24	0.84	0.35	0.26
Uniform Delay, d1	48.0	40.3		52.1	49.0	0.0	59.0	37.7	23.0	46.2	17.9	7.0
Progression Factor	1.00	1.00		1.00	1.00	1.00	1.00	1.00	1.00	1.00	1.00	1.00
Incremental Delay, d2	10.8	0.5		2.8	8.1	1.3	0.2	3.1	0.1	8.1	0.0	0.0
Delay (s)	58.8	40.7		54.8	57.1	1.3	59.3	40.7	23.1	54.3	18.0	7.1
Level of Service	E	D		D	E	A	E	D	C	D	B	A
Approach Delay (s)		48.4			23.7			37.6			29.2	
Approach LOS		D			C			D			C	

Intersection Summary			
HCM Average Control Delay	34.0	HCM Level of Service	C
HCM Volume to Capacity ratio	0.79		
Actuated Cycle Length (s)	121.4	Sum of lost time (s)	12.0
Intersection Capacity Utilization	79.0%	ICU Level of Service	D
Analysis Period (min)	15		

c Critical Lane Group

HCM Unsignalized Intersection Capacity Analysis
27: Site Drive #9 & Pacific Blvd

Kincora
Total Future 2025

Movement	WBL	WBR	NBT	NBR	SBL	SBT
Lane Configurations						
Sign Control	Stop		Free			Free
Grade	0%		0%			0%
Volume (veh/h)	0	95	832	217	0	688
Peak Hour Factor	0.95	0.95	0.95	0.95	0.95	0.95
Hourly flow rate (vph)	0	100	876	228	0	724
Pedestrians						
Lane Width (ft)						
Walking Speed (ft/s)						
Percent Blockage						
Right turn flare (veh)						
Median type	None					
Median storage veh)						
Upstream signal (ft)			535			850
pX, platoon unblocked	0.92	0.88			0.88	
vC, conflicting volume	1352	552			1104	
vC1, stage 1 conf vol						
vC2, stage 2 conf vol						
vCu, unblocked vol	1013	354			982	
tC, single (s)	6.8	6.9			4.1	
tC, 2 stage (s)						
tF (s)	3.5	3.3			2.2	
p0 queue free %	100	82			100	
cM capacity (veh/h)	217	565			615	

Direction, Lane #	WB 1	NB 1	NB 2	SB 1	SB 2
Volume Total	100	584	520	362	362
Volume Left	0	0	0	0	0
Volume Right	100	0	228	0	0
cSH	565	1700	1700	1700	1700
Volume to Capacity	0.18	0.34	0.31	0.21	0.21
Queue Length 95th (ft)	16	0	0	0	0
Control Delay (s)	12.7	0.0	0.0	0.0	0.0
Lane LOS	B				
Approach Delay (s)	12.7	0.0		0.0	
Approach LOS	B				

Intersection Summary			
Average Delay	0.7		
Intersection Capacity Utilization	42.5%	ICU Level of Service	A
Analysis Period (min)	15		

Movement	WBL	WBR	NBT	NBR	SBL	SBT
Lane Configurations						
Ideal Flow (vphpl)	1900	1900	1900	1900	1900	1900
Total Lost time (s)	4.0		4.0			4.0
Lane Util. Factor	1.00		0.95			0.95
Frt	0.95		0.99			1.00
Flt Protected	0.97		1.00			0.99
Satd. Flow (prot)	1711		3502			3515
Flt Permitted	0.97		1.00			0.73
Satd. Flow (perm)	1711		3502			2598
Volume (vph)	115	77	816	62	94	594
Peak-hour factor, PHF	0.95	0.95	0.95	0.95	0.95	0.95
Adj. Flow (vph)	121	81	859	65	99	625
RTOR Reduction (vph)	15	0	11	0	0	0
Lane Group Flow (vph)	187	0	913	0	0	724
Turn Type					Perm	
Protected Phases	8		2			6
Permitted Phases					6	
Actuated Green, G (s)	12.1		25.3			25.3
Effective Green, g (s)	15.1		28.3			28.3
Actuated g/C Ratio	0.29		0.55			0.55
Clearance Time (s)	7.0		7.0			7.0
Vehicle Extension (s)	2.0		2.0			2.0
Lane Grp Cap (vph)	503		1928			1430
v/s Ratio Prot	c0.11		0.26			
v/s Ratio Perm						c0.28
v/c Ratio	0.37		0.47			0.51
Uniform Delay, d1	14.4		7.0			7.2
Progression Factor	1.00		1.00			1.00
Incremental Delay, d2	0.2		0.1			0.1
Delay (s)	14.6		7.1			7.3
Level of Service	B		A			A
Approach Delay (s)	14.6		7.1			7.3
Approach LOS	B		A			A

Intersection Summary			
HCM Average Control Delay	8.0	HCM Level of Service	A
HCM Volume to Capacity ratio	0.46		
Actuated Cycle Length (s)	51.4	Sum of lost time (s)	8.0
Intersection Capacity Utilization	64.8%	ICU Level of Service	C
Analysis Period (min)	15		
c Critical Lane Group			

Movement	WBL	WBR	NBT	NBR	SBL	SBT
Lane Configurations						
Sign Control	Stop		Free			Free
Grade	0%		0%			0%
Volume (veh/h)	0	13	2055	78	0	1489
Peak Hour Factor	0.95	0.95	0.95	0.95	0.95	0.95
Hourly flow rate (vph)	0	14	2163	82	0	1567
Pedestrians						
Lane Width (ft)						
Walking Speed (ft/s)						
Percent Blockage						
Right turn flare (veh)						
Median type	None					
Median storage veh)						
Upstream signal (ft)			844			
pX, platoon unblocked	0.78	0.78			0.78	
vC, conflicting volume	2988	1123			2245	
vC1, stage 1 conf vol						
vC2, stage 2 conf vol						
vCu, unblocked vol	3266	876			2314	
tC, single (s)	6.8	6.9			4.1	
tC, 2 stage (s)						
tF (s)	3.5	3.3			2.2	
p0 queue free %	100	94			100	
cM capacity (veh/h)	5	228			166	

Direction, Lane #	WB 1	NB 1	NB 2	SB 1	SB 2
Volume Total	14	1442	803	784	784
Volume Left	0	0	0	0	0
Volume Right	14	0	82	0	0
cSH	228	1700	1700	1700	1700
Volume to Capacity	0.06	0.85	0.47	0.46	0.46
Queue Length 95th (ft)	5	0	0	0	0
Control Delay (s)	21.8	0.0	0.0	0.0	0.0
Lane LOS	C				
Approach Delay (s)	21.8	0.0		0.0	
Approach LOS	C				

Intersection Summary			
Average Delay	0.1		
Intersection Capacity Utilization	69.3%	ICU Level of Service	C
Analysis Period (min)	15		

Movement	WBL	WBR	NBT	NBR	SBL	SBT
Lane Configurations						
Sign Control	Stop		Free			Free
Grade	0%		0%			0%
Volume (veh/h)	0	13	1991	78	0	1489
Peak Hour Factor	0.95	0.95	0.95	0.95	0.95	0.95
Hourly flow rate (vph)	0	14	2096	82	0	1567
Pedestrians						
Lane Width (ft)						
Walking Speed (ft/s)						
Percent Blockage						
Right turn flare (veh)						
Median type	None					
Median storage veh)						
Upstream signal (ft)						
pX, platoon unblocked						
vC, conflicting volume	2921	1089			2178	
vC1, stage 1 conf vol						
vC2, stage 2 conf vol						
vCu, unblocked vol	2921	1089			2178	
tC, single (s)	6.8	6.9			4.1	
tC, 2 stage (s)						
tF (s)	3.5	3.3			2.2	
p0 queue free %	100	94			100	
cM capacity (veh/h)	12	211			241	

Direction, Lane #	WB 1	NB 1	NB 2	SB 1	SB 2
Volume Total	14	1397	781	784	784
Volume Left	0	0	0	0	0
Volume Right	14	0	82	0	0
cSH	211	1700	1700	1700	1700
Volume to Capacity	0.06	0.82	0.46	0.46	0.46
Queue Length 95th (ft)	5	0	0	0	0
Control Delay (s)	23.3	0.0	0.0	0.0	0.0
Lane LOS	C				
Approach Delay (s)	23.3	0.0		0.0	
Approach LOS	C				

Intersection Summary			
Average Delay	0.1		
Intersection Capacity Utilization	67.5%	ICU Level of Service	C
Analysis Period (min)	15		

Movement	EBL	EBT	EBR	WBL	WBT	WBR	NBL	NBT	NBR	SBL	SBT	SBR
Lane Configurations												
Sign Control		Stop			Stop			Free			Free	
Grade		0%			0%			0%			0%	
Volume (veh/h)	0	0	133	0	0	13	0	1971	31	0	1356	108
Peak Hour Factor	0.95	0.95	0.95	0.95	0.95	0.95	0.95	0.95	0.95	0.95	0.95	0.95
Hourly flow rate (vph)	0	0	140	0	0	14	0	2075	33	0	1427	114
Pedestrians												
Lane Width (ft)												
Walking Speed (ft/s)												
Percent Blockage												
Right turn flare (veh)												
Median type		None			None							
Median storage veh)												
Upstream signal (ft)												
pX, platoon unblocked												
vC, conflicting volume	2535	3592	771	2805	3632	1054	1541			2107		
vC1, stage 1 conf vol												
vC2, stage 2 conf vol												
vCu, unblocked vol	2535	3592	771	2805	3632	1054	1541			2107		
tC, single (s)	7.5	6.5	6.9	7.5	6.5	6.9	4.1			4.1		
tC, 2 stage (s)												
tF (s)	3.5	4.0	3.3	3.5	4.0	3.3	2.2			2.2		
p0 queue free %	100	100	59	100	100	94	100			100		
cM capacity (veh/h)	13	5	343	5	5	222	427			257		

Direction, Lane #	EB 1	WB 1	NB 1	NB 2	SB 1	SB 2
Volume Total	140	14	1383	724	952	589
Volume Left	0	0	0	0	0	0
Volume Right	140	14	0	33	0	114
cSH	343	222	1700	1700	1700	1700
Volume to Capacity	0.41	0.06	0.81	0.43	0.56	0.35
Queue Length 95th (ft)	48	5	0	0	0	0
Control Delay (s)	22.5	22.2	0.0	0.0	0.0	0.0
Lane LOS	C	C				
Approach Delay (s)	22.5	22.2	0.0		0.0	
Approach LOS	C	C				

Intersection Summary			
Average Delay	0.9		
Intersection Capacity Utilization	65.5%	ICU Level of Service	C
Analysis Period (min)	15		

Movement	EBL	EBR	NBL	NBT	SBT	SBR
Lane Configurations						
Sign Control	Stop			Free	Free	
Grade	0%			0%	0%	
Volume (veh/h)	0	146	0	1984	1318	139
Peak Hour Factor	0.95	0.95	0.95	0.95	0.95	0.95
Hourly flow rate (vph)	0	154	0	2088	1387	146
Pedestrians						
Lane Width (ft)						
Walking Speed (ft/s)						
Percent Blockage						
Right turn flare (veh)						
Median type	None					
Median storage veh)						
Upstream signal (ft)					936	
pX, platoon unblocked	0.73	0.73	0.73			
vC, conflicting volume	2432	694	1534			
vC1, stage 1 conf vol						
vC2, stage 2 conf vol						
vCu, unblocked vol	2595	200	1357			
tC, single (s)	6.8	6.9	4.1			
tC, 2 stage (s)						
tF (s)	3.5	3.3	2.2			
p0 queue free %	100	74	100			
cM capacity (veh/h)	15	586	365			

Direction, Lane #	EB 1	NB 1	NB 2	SB 1	SB 2	SB 3
Volume Total	154	1044	1044	694	694	146
Volume Left	0	0	0	0	0	0
Volume Right	154	0	0	0	0	146
cSH	586	1700	1700	1700	1700	1700
Volume to Capacity	0.26	0.61	0.61	0.41	0.41	0.09
Queue Length 95th (ft)	26	0	0	0	0	0
Control Delay (s)	13.3	0.0	0.0	0.0	0.0	0.0
Lane LOS	B					
Approach Delay (s)	13.3	0.0		0.0		
Approach LOS	B					

Intersection Summary				
Average Delay	0.5			
Intersection Capacity Utilization	58.2%	ICU Level of Service		B
Analysis Period (min)	15			

Movement	EBL	EBR	NBL	NBT	SBT	SBR
Lane Configurations						
Ideal Flow (vphpl)	1900	1900	1900	1900	1900	1900
Total Lost time (s)	4.0	4.0	4.0	4.0	4.0	
Lane Util. Factor	1.00	1.00	1.00	0.95	0.91	
Frt	1.00	0.85	1.00	1.00	0.99	
Flt Protected	0.95	1.00	0.95	1.00	1.00	
Satd. Flow (prot)	1770	1583	1770	3539	5048	
Flt Permitted	0.95	1.00	0.12	1.00	1.00	
Satd. Flow (perm)	1770	1583	225	3539	5048	
Volume (vph)	70	272	370	1614	1186	62
Peak-hour factor, PHF	0.95	0.95	0.95	0.95	0.95	0.95
Adj. Flow (vph)	74	286	389	1699	1248	65
RTOR Reduction (vph)	0	4	0	0	5	0
Lane Group Flow (vph)	74	282	389	1699	1308	0
Turn Type		pt+ov	pm+pt			
Protected Phases	4	4 5	5	2	6	
Permitted Phases			2			
Actuated Green, G (s)	12.7	39.0	52.4	52.4	26.1	
Effective Green, g (s)	15.7	42.0	55.4	55.4	29.1	
Actuated g/C Ratio	0.20	0.53	0.70	0.70	0.37	
Clearance Time (s)	7.0		7.0	7.0	7.0	
Vehicle Extension (s)	2.0		2.0	2.0	2.0	
Lane Grp Cap (vph)	351	841	593	2479	1857	
v/s Ratio Prot	0.04	c0.18	0.18	c0.48	0.26	
v/s Ratio Perm			0.27			
v/c Ratio	0.21	0.34	0.66	0.69	0.70	
Uniform Delay, d1	26.5	10.6	15.4	6.8	21.3	
Progression Factor	1.00	1.00	1.00	1.00	1.00	
Incremental Delay, d2	0.1	0.1	2.0	0.6	1.0	
Delay (s)	26.6	10.7	17.4	7.5	22.3	
Level of Service	C	B	B	A	C	
Approach Delay (s)	13.9			9.3	22.3	
Approach LOS	B			A	C	

Intersection Summary			
HCM Average Control Delay	14.3	HCM Level of Service	B
HCM Volume to Capacity ratio	0.62		
Actuated Cycle Length (s)	79.1	Sum of lost time (s)	8.0
Intersection Capacity Utilization	63.1%	ICU Level of Service	B
Analysis Period (min)	15		
c Critical Lane Group			

Movement	EBL	EBR	NBL	NBT	SBT	SBR
Lane Configurations						
Ideal Flow (vphpl)	1900	1900	1900	1900	1900	1900
Total Lost time (s)	4.0	4.0	4.0	4.0	4.0	
Lane Util. Factor	1.00	1.00	1.00	0.95	0.95	
Frt	1.00	0.85	1.00	1.00	0.97	
Flt Protected	0.95	1.00	0.95	1.00	1.00	
Satd. Flow (prot)	1770	1583	1770	3539	3437	
Flt Permitted	0.95	1.00	0.09	1.00	1.00	
Satd. Flow (perm)	1770	1583	176	3539	3437	
Volume (vph)	97	323	674	1010	925	220
Peak-hour factor, PHF	0.95	0.95	0.95	0.95	0.95	0.95
Adj. Flow (vph)	102	340	709	1063	974	232
RTOR Reduction (vph)	0	0	0	0	19	0
Lane Group Flow (vph)	102	340	709	1063	1187	0
Turn Type		Free	pm+pt			
Protected Phases	4		5	2	6	
Permitted Phases		Free	2			
Actuated Green, G (s)	7.2	100.7	79.5	79.5	35.3	
Effective Green, g (s)	10.2	100.7	82.5	82.5	38.3	
Actuated g/C Ratio	0.10	1.00	0.82	0.82	0.38	
Clearance Time (s)	7.0		7.0	7.0	7.0	
Vehicle Extension (s)	2.0		2.0	2.0	2.0	
Lane Grp Cap (vph)	179	1583	781	2899	1307	
v/s Ratio Prot	c0.06		c0.36	0.30	0.35	
v/s Ratio Perm		0.21	c0.38			
v/c Ratio	0.57	0.21	0.91	0.37	0.91	
Uniform Delay, d1	43.2	0.0	24.1	2.4	29.5	
Progression Factor	1.00	1.00	1.00	1.00	1.00	
Incremental Delay, d2	2.5	0.3	13.9	0.0	9.2	
Delay (s)	45.6	0.3	38.1	2.4	38.7	
Level of Service	D	A	D	A	D	
Approach Delay (s)	10.8			16.7	38.7	
Approach LOS	B			B	D	

Intersection Summary

HCM Average Control Delay	23.7	HCM Level of Service	C
HCM Volume to Capacity ratio	0.86		
Actuated Cycle Length (s)	100.7	Sum of lost time (s)	8.0
Intersection Capacity Utilization	88.3%	ICU Level of Service	E
Analysis Period (min)	15		

c Critical Lane Group

Movement	EBL	EBR	NBL	NBT	SBT	SBR
Lane Configurations						
Ideal Flow (vphpl)	1900	1900	1900	1900	1900	1900
Total Lost time (s)	4.0	4.0	4.0	4.0	4.0	
Lane Util. Factor	1.00	1.00	0.91	0.91	0.95	
Frt	1.00	0.85	1.00	1.00	0.99	
Flt Protected	0.95	1.00	0.95	0.99	1.00	
Satd. Flow (prot)	1770	1583	1610	3351	3498	
Flt Permitted	0.95	1.00	0.18	0.54	1.00	
Satd. Flow (perm)	1770	1583	304	1836	3498	
Volume (vph)	76	313	423	684	832	70
Peak-hour factor, PHF	0.95	0.95	0.95	0.95	0.95	0.95
Adj. Flow (vph)	80	329	445	720	876	74
RTOR Reduction (vph)	0	35	0	0	5	0
Lane Group Flow (vph)	80	294	227	938	945	0
Turn Type		pm+ov	pm+pt			
Protected Phases	4	5	5	2	6	
Permitted Phases		4	2			
Actuated Green, G (s)	5.1	15.4	42.0	42.0	24.7	
Effective Green, g (s)	8.1	21.4	45.0	45.0	27.7	
Actuated g/C Ratio	0.13	0.35	0.74	0.74	0.45	
Clearance Time (s)	7.0	7.0	7.0	7.0	7.0	
Vehicle Extension (s)	2.0	2.0	2.0	2.0	2.0	
Lane Grp Cap (vph)	235	658	508	1682	1586	
v/s Ratio Prot	0.05	c0.10	0.10	c0.12	0.27	
v/s Ratio Perm		0.09	0.23	c0.29		
v/c Ratio	0.34	0.45	0.45	0.56	0.60	
Uniform Delay, d1	24.1	15.3	4.9	3.6	12.5	
Progression Factor	1.00	1.00	1.00	1.00	1.00	
Incremental Delay, d2	0.3	0.2	0.2	0.2	0.4	
Delay (s)	24.4	15.5	5.1	3.8	12.9	
Level of Service	C	B	A	A	B	
Approach Delay (s)	17.2			4.1	12.9	
Approach LOS	B			A	B	

Intersection Summary

HCM Average Control Delay	9.5	HCM Level of Service	A
HCM Volume to Capacity ratio	0.55		
Actuated Cycle Length (s)	61.1	Sum of lost time (s)	8.0
Intersection Capacity Utilization	64.4%	ICU Level of Service	C
Analysis Period (min)	15		

c Critical Lane Group

HCM Unsignalized Intersection Capacity Analysis
36: Nokes Blvd & WB Off-Ramp

Kincora
Total Future 2025

Movement	EBL	EBT	WBT	WBR	SWL	SWR
Lane Configurations		↑↑	↑↑			↱↱
Sign Control		Free	Free		Stop	
Grade		0%	0%		0%	
Volume (veh/h)	0	1427	690	0	0	535
Peak Hour Factor	0.95	0.95	0.95	0.95	0.95	0.95
Hourly flow rate (vph)	0	1502	726	0	0	563
Pedestrians						
Lane Width (ft)						
Walking Speed (ft/s)						
Percent Blockage						
Right turn flare (veh)						
Median type					None	
Median storage veh)						
Upstream signal (ft)		411				
pX, platoon unblocked					0.85	
vC, conflicting volume	726				1477	363
vC1, stage 1 conf vol						
vC2, stage 2 conf vol						
vCu, unblocked vol	726				1387	363
tC, single (s)	4.1				6.8	6.9
tC, 2 stage (s)						
tF (s)	2.2				3.5	3.3
p0 queue free %	100				100	11
cM capacity (veh/h)	873				114	634

Direction, Lane #	EB 1	EB 2	WB 1	WB 2	SW 1	SW 2
Volume Total	751	751	363	363	282	282
Volume Left	0	0	0	0	0	0
Volume Right	0	0	0	0	282	282
cSH	1700	1700	1700	1700	634	634
Volume to Capacity	0.44	0.44	0.21	0.21	0.44	0.44
Queue Length 95th (ft)	0	0	0	0	57	57
Control Delay (s)	0.0	0.0	0.0	0.0	15.1	15.1
Lane LOS					C	C
Approach Delay (s)	0.0		0.0		15.1	
Approach LOS					C	

Intersection Summary			
Average Delay	3.1		
Intersection Capacity Utilization	44.5%	ICU Level of Service	A
Analysis Period (min)	15		

HCM Signalized Intersection Capacity Analysis
37: Site Drive #3 & Pacific Blvd

Kincora
Total Future 2025

Movement	EBL	EBR	NBL	NBT	SBT	SBR
Lane Configurations	↰	↱	↰	↑↑	↑↑	
Ideal Flow (vphpl)	1900	1900	1900	1900	1900	1900
Total Lost time (s)	4.0	4.0	4.0	4.0	4.0	
Lane Util. Factor	1.00	1.00	1.00	0.95	0.95	
Frt	1.00	0.85	1.00	1.00	0.98	
Flt Protected	0.95	1.00	0.95	1.00	1.00	
Satd. Flow (prot)	1770	1583	1770	3539	3463	
Flt Permitted	0.95	1.00	0.22	1.00	1.00	
Satd. Flow (perm)	1770	1583	418	3539	3463	
Volume (vph)	76	302	311	449	599	100
Peak-hour factor, PHF	0.95	0.95	0.95	0.95	0.95	0.95
Adj. Flow (vph)	80	318	327	473	631	105
RTOR Reduction (vph)	0	70	0	0	11	0
Lane Group Flow (vph)	80	248	327	473	725	0
Turn Type		pm+ov	pm+pt			
Protected Phases	4	5	5	2	6	
Permitted Phases		4	2			
Actuated Green, G (s)	5.0	20.4	41.9	41.9	19.5	
Effective Green, g (s)	8.0	28.4	44.9	44.9	22.5	
Actuated g/C Ratio	0.13	0.43	0.74	0.74	0.37	
Clearance Time (s)	7.0	7.0	7.0	7.0	7.0	
Vehicle Extension (s)	2.0	2.0	2.0	2.0	2.0	
Lane Grp Cap (vph)	233	790	717	2609	1279	
v/s Ratio Prot	0.05	c0.09	c0.14	0.13	c0.21	
v/s Ratio Perm		0.06	0.20			
v/c Ratio	0.34	0.31	0.46	0.18	0.57	
Uniform Delay, d1	24.1	11.3	4.3	2.4	15.3	
Progression Factor	1.00	1.00	1.00	1.00	1.00	
Incremental Delay, d2	0.3	0.1	0.2	0.0	0.3	
Delay (s)	24.4	11.4	4.5	2.4	15.7	
Level of Service	C	B	A	A	B	
Approach Delay (s)	14.0			3.3	15.7	
Approach LOS	B			A	B	

Intersection Summary			
HCM Average Control Delay	10.2	HCM Level of Service	B
HCM Volume to Capacity ratio	0.50		
Actuated Cycle Length (s)	60.9	Sum of lost time (s)	12.0
Intersection Capacity Utilization	55.3%	ICU Level of Service	B
Analysis Period (min)	15		
c Critical Lane Group			

APPENDIX D-8

INTERSECTION CAPACITY ANALYSIS RESULTS –BUILD-OUT PLUS FIVE (2030) CONDITIONS WITH DEVELOPMENT

HCM Signalized Intersection Capacity Analysis
5: Route 7 & Countryside Blvd.

Kincora
Total Future 2030

Movement	EBL	EBT	EBR	WBL	WBT	WBR	NBL	NBT	NBR	SBL	SBT	SBR
Lane Configurations												
Ideal Flow (vphpl)	1900	1900	1900	1900	1900	1900	1900	1900	1900	1900	1900	1900
Total Lost time (s)	3.0	3.0	3.0	3.0	3.0	3.0	3.0	3.0	3.0	3.0	3.0	3.0
Lane Util. Factor	0.97	0.86	1.00	0.97	0.86	1.00	0.97	0.95	1.00	0.97	0.95	1.00
Frt	1.00	1.00	0.85	1.00	1.00	0.85	1.00	1.00	0.85	1.00	1.00	0.85
Flt Protected	0.95	1.00	1.00	0.95	1.00	1.00	0.95	1.00	1.00	0.95	1.00	1.00
Satd. Flow (prot)	3433	6408	1583	3433	6408	1583	3433	3539	1583	3433	3539	1583
Flt Permitted	0.95	1.00	1.00	0.95	1.00	1.00	0.95	1.00	1.00	0.95	1.00	1.00
Satd. Flow (perm)	3433	6408	1583	3433	6408	1583	3433	3539	1583	3433	3539	1583
Volume (vph)	314	3262	166	134	2577	108	86	70	153	165	94	372
Peak-hour factor, PHF	0.95	0.95	0.95	0.95	0.95	0.95	0.95	0.95	0.95	0.95	0.95	0.95
Adj. Flow (vph)	331	3434	175	141	2713	114	91	74	161	174	99	392
RTOR Reduction (vph)	0	0	0	0	0	39	0	0	0	0	0	20
Lane Group Flow (vph)	331	3434	175	141	2713	75	91	74	161	174	99	372
Turn Type	Prot		Free	Prot		pm+ov	Prot		Free	Prot		pm+ov
Protected Phases	1	6		5	2	3	7	4		3	8	1
Permitted Phases			Free			2			Free			8
Actuated Green, G (s)	16.0	77.6	140.0	8.0	69.6	84.0	7.4	12.0	140.0	14.4	19.0	35.0
Effective Green, g (s)	20.0	81.6	140.0	12.0	73.6	92.0	11.4	16.0	140.0	18.4	23.0	43.0
Actuated g/C Ratio	0.14	0.58	1.00	0.09	0.53	0.66	0.08	0.11	1.00	0.13	0.16	0.31
Clearance Time (s)	7.0	7.0		7.0	7.0	7.0	7.0	7.0		7.0	7.0	7.0
Vehicle Extension (s)	2.0	2.0		3.0	2.0	2.0	2.0	2.0		2.0	2.0	2.0
Lane Grp Cap (vph)	490	3735	1583	294	3369	1074	280	404	1583	451	581	520
v/s Ratio Prot	0.10	c0.54		0.04	0.42	0.01	0.03	0.02		c0.05	0.03	c0.10
v/s Ratio Perm			0.11			0.04			0.10			0.13
v/c Ratio	0.68	0.92	0.11	0.48	0.81	0.07	0.33	0.18	0.10	0.39	0.17	0.72
Uniform Delay, d1	56.9	26.2	0.0	61.0	27.3	8.6	60.7	56.1	0.0	55.6	50.3	43.1
Progression Factor	1.00	1.00	1.00	1.00	1.00	1.00	1.00	1.00	1.00	1.00	1.00	1.00
Incremental Delay, d2	2.9	4.8	0.1	1.2	2.2	0.0	0.2	0.1	0.1	0.2	0.1	3.9
Delay (s)	59.8	31.1	0.1	62.3	29.5	8.6	60.9	56.2	0.1	55.8	50.3	46.9
Level of Service	E	C	A	E	C	A	E	E	A	E	D	D
Approach Delay (s)		32.1			30.2			29.8			49.8	
Approach LOS		C			C			C			D	

Intersection Summary			
HCM Average Control Delay	32.8	HCM Level of Service	C
HCM Volume to Capacity ratio	0.80		
Actuated Cycle Length (s)	140.0	Sum of lost time (s)	6.0
Intersection Capacity Utilization	75.4%	ICU Level of Service	D
Analysis Period (min)	15		

c Critical Lane Group

HCM Signalized Intersection Capacity Analysis
6: Route 7 & Palisade Parkway

Kincora
Total Future 2030

Movement	EBL	EBT	EBR	WBL	WBT	WBR	NBL	NBT	NBR	SBL	SBT	SBR
Lane Configurations												
Ideal Flow (vphpl)	1900	1900	1900	1900	1900	1900	1900	1900	1900	1900	1900	1900
Total Lost time (s)	3.0	3.0	3.0	3.0	3.0	3.0	3.0	3.0	3.0	3.0	3.0	3.0
Lane Util. Factor	0.97	0.86	1.00	1.00	0.86	1.00	0.97	1.00	1.00	0.97	1.00	1.00
Frt	1.00	1.00	0.85	1.00	1.00	0.85	1.00	1.00	0.85	1.00	1.00	0.85
Flt Protected	0.95	1.00	1.00	0.95	1.00	1.00	0.95	1.00	1.00	0.95	1.00	1.00
Satd. Flow (prot)	3433	6408	1583	1770	6408	1583	3433	1863	1583	3433	1863	1583
Flt Permitted	0.95	1.00	1.00	0.95	1.00	1.00	0.95	1.00	1.00	0.95	1.00	1.00
Satd. Flow (perm)	3433	6408	1583	1770	6408	1583	3433	1863	1583	3433	1863	1583
Volume (vph)	162	2997	381	123	2539	73	58	34	42	131	82	208
Peak-hour factor, PHF	0.95	0.95	0.95	0.95	0.95	0.95	0.95	0.95	0.95	0.95	0.95	0.95
Adj. Flow (vph)	171	3155	401	129	2673	77	61	36	44	138	86	219
RTOR Reduction (vph)	0	0	0	0	0	0	0	0	6	0	0	22
Lane Group Flow (vph)	171	3155	401	129	2673	77	61	36	38	138	86	197
Turn Type	Prot		Free	Prot		Free	Prot		pm+ov	Prot		pm+ov
Protected Phases	1	6		5	2		7	4	5	3	8	1
Permitted Phases			Free			Free			4			8
Actuated Green, G (s)	10.8	68.3	120.0	10.9	68.4	120.0	4.0	4.8	15.7	8.0	8.8	19.6
Effective Green, g (s)	14.8	72.3	120.0	14.9	72.4	120.0	8.0	8.8	23.7	12.0	12.8	27.6
Actuated g/C Ratio	0.12	0.60	1.00	0.12	0.60	1.00	0.07	0.07	0.20	0.10	0.11	0.23
Clearance Time (s)	7.0	7.0		7.0	7.0		7.0	7.0	7.0	7.0	7.0	7.0
Vehicle Extension (s)	2.0	4.0		2.0	4.0		3.0	3.0	2.0	3.0	3.0	2.0
Lane Grp Cap (vph)	423	3861	1583	220	3866	1583	229	137	352	343	199	404
v/s Ratio Prot	0.05	c0.49		c0.07	0.42		0.02	0.02	0.01	c0.04	0.05	c0.06
v/s Ratio Perm			c0.25			0.05			0.01			0.06
v/c Ratio	0.40	0.82	0.25	0.59	0.69	0.05	0.27	0.26	0.11	0.40	0.43	0.49
Uniform Delay, d1	48.5	18.7	0.0	49.6	16.2	0.0	53.2	52.5	39.5	50.6	50.2	40.1
Progression Factor	1.00	1.00	1.00	1.00	1.00	1.00	1.00	1.00	1.00	1.00	1.00	1.00
Incremental Delay, d2	0.2	2.0	0.4	2.6	1.0	0.1	0.6	1.0	0.1	0.8	1.5	0.3
Delay (s)	48.8	20.7	0.4	52.2	17.2	0.1	53.8	53.6	39.5	51.4	51.7	40.4
Level of Service	D	C	A	D	B	A	D	D	D	D	D	D
Approach Delay (s)		19.8			18.3			49.3			46.0	
Approach LOS		B			B			D			D	

Intersection Summary			
HCM Average Control Delay	21.4	HCM Level of Service	C
HCM Volume to Capacity ratio	0.71		
Actuated Cycle Length (s)	120.0	Sum of lost time (s)	9.0
Intersection Capacity Utilization	70.6%	ICU Level of Service	C
Analysis Period (min)	15		

c Critical Lane Group

Movement	WBL	WBR	NBT	NBR	SBL	SBT
Lane Configurations						
Ideal Flow (vphpl)	1900	1900	1900	1900	1900	1900
Total Lost time (s)	3.0	3.0	3.0		3.0	3.0
Lane Util. Factor	1.00	1.00	0.95		1.00	0.95
Frt	1.00	0.85	0.97		1.00	1.00
Flt Protected	0.95	1.00	1.00		0.95	1.00
Satd. Flow (prot)	1770	1583	3445		1770	3539
Flt Permitted	0.95	1.00	1.00		0.43	1.00
Satd. Flow (perm)	1770	1583	3445		798	3539
Volume (vph)	89	191	326	70	159	643
Peak-hour factor, PHF	0.95	0.95	0.95	0.95	0.95	0.95
Adj. Flow (vph)	94	201	343	74	167	677
RTOR Reduction (vph)	0	123	15	0	0	0
Lane Group Flow (vph)	94	78	402	0	167	677
Turn Type		pm+ov			pm+pt	
Protected Phases	4	1	2		1	6
Permitted Phases		4			6	
Actuated Green, G (s)	4.9	12.4	18.6		33.1	33.1
Effective Green, g (s)	8.9	20.4	23.1		37.6	37.6
Actuated g/C Ratio	0.17	0.39	0.44		0.72	0.72
Clearance Time (s)	7.0	7.0	7.5		7.0	7.5
Vehicle Extension (s)	2.0	2.0	2.0		2.0	2.0
Lane Grp Cap (vph)	300	706	1516		784	2535
v/s Ratio Prot	c0.05	0.02	0.12		0.05	c0.19
v/s Ratio Perm		0.03			0.11	
v/c Ratio	0.31	0.11	0.27		0.21	0.27
Uniform Delay, d1	19.1	10.3	9.3		2.5	2.6
Progression Factor	1.00	1.00	1.00		1.00	1.00
Incremental Delay, d2	0.2	0.0	0.0		0.0	0.0
Delay (s)	19.3	10.3	9.4		2.6	2.6
Level of Service	B	B	A		A	A
Approach Delay (s)	13.2		9.4			2.6
Approach LOS	B		A			A

Intersection Summary

HCM Average Control Delay	6.4	HCM Level of Service	A
HCM Volume to Capacity ratio	0.28		
Actuated Cycle Length (s)	52.5	Sum of lost time (s)	6.0
Intersection Capacity Utilization	37.1%	ICU Level of Service	A
Analysis Period (min)	15		

c Critical Lane Group

Movement	EBL	EBT	EBR	WBL	WBT	WBR	NBL	NBT	NBR	SBL	SBT	SBR
Lane Configurations												
Ideal Flow (vphpl)	1900	1900	1900	1900	1900	1900	1900	1900	1900	1900	1900	1900
Total Lost time (s)		4.0	4.0		4.0	4.0	4.0	4.0	4.0	4.0	4.0	4.0
Lane Util. Factor		1.00	1.00		1.00	1.00	1.00	0.95	1.00	1.00	0.95	1.00
Frt		1.00	0.85		1.00	0.85	1.00	1.00	0.85	1.00	1.00	0.85
Flt Protected		0.95	1.00		0.96	1.00	0.95	1.00	1.00	0.95	1.00	1.00
Satd. Flow (prot)		1778	1583		1783	1583	1770	3539	1583	1770	3539	1583
Flt Permitted		0.67	1.00		0.72	1.00	0.30	1.00	1.00	0.56	1.00	1.00
Satd. Flow (perm)		1257	1583		1335	1583	559	3539	1583	1051	3539	1583
Volume (vph)	41	2	145	71	9	38	35	293	15	9	777	39
Peak-hour factor, PHF	0.95	0.95	0.95	0.95	0.95	0.95	0.95	0.95	0.95	0.95	0.95	0.95
Adj. Flow (vph)	43	2	153	75	9	40	37	308	16	9	818	41
RTOR Reduction (vph)	0	0	132	0	0	35	0	0	5	0	0	14
Lane Group Flow (vph)	0	45	21	0	84	5	37	308	11	9	818	27
Turn Type	Perm		Perm	Perm		Perm	pm+pt		Perm	pm+pt		Perm
Protected Phases		4			8		5	2		1	6	
Permitted Phases	4		4	8		8	2		2	6		6
Actuated Green, G (s)		9.3	9.3		9.3	9.3	61.9	58.7	58.7	57.5	56.5	56.5
Effective Green, g (s)		12.3	12.3		12.3	12.3	67.9	61.7	61.7	63.5	59.5	59.5
Actuated g/C Ratio		0.14	0.14		0.14	0.14	0.75	0.69	0.69	0.71	0.66	0.66
Clearance Time (s)		7.0	7.0		7.0	7.0	7.0	7.0	7.0	7.0	7.0	7.0
Vehicle Extension (s)		2.0	2.0		2.0	2.0	2.0	2.0	2.0	2.0	2.0	2.0
Lane Grp Cap (vph)		172	216		182	216	505	2426	1085	773	2340	1047
v/s Ratio Prot							c0.01	0.09		0.00	c0.23	
v/s Ratio Perm		0.04	0.01		c0.06	0.00	0.05		0.01	0.01		0.02
v/c Ratio		0.26	0.10		0.46	0.03	0.07	0.13	0.01	0.01	0.35	0.03
Uniform Delay, d1		34.8	34.0		35.8	33.7	3.1	4.9	4.5	3.9	6.7	5.3
Progression Factor		1.00	1.00		1.00	1.00	1.00	1.00	1.00	1.00	1.00	1.00
Incremental Delay, d2		0.3	0.1		0.7	0.0	0.0	0.1	0.0	0.0	0.4	0.0
Delay (s)		35.1	34.1		36.5	33.7	3.2	5.0	4.5	3.9	7.1	5.3
Level of Service		D	C		D	C	A	A	A	A	A	A
Approach Delay (s)		34.3			35.6			4.8			7.0	
Approach LOS		C			D			A			A	

Intersection Summary

HCM Average Control Delay	12.3	HCM Level of Service	B
HCM Volume to Capacity ratio	0.36		
Actuated Cycle Length (s)	90.0	Sum of lost time (s)	16.0
Intersection Capacity Utilization	45.9%	ICU Level of Service	A
Analysis Period (min)	15		

c Critical Lane Group

HCM Signalized Intersection Capacity Analysis
10: Gloucester Parkway & Ashburn Village Blvd.

Kincora
Total Future 2030

Movement	EBL	EBT	EBR	WBL	WBT	WBR	NBL	NBT	NBR	SBL	SBT	SBR
Lane Configurations												
Ideal Flow (vphpl)	1900	1900	1900	1900	1900	1900	1900	1900	1900	1900	1900	1900
Total Lost time (s)	3.0	3.0	3.0	3.0	3.0	3.0	3.0	3.0	3.0	3.0	3.0	3.0
Lane Util. Factor	1.00	0.95	1.00	0.97	0.95	1.00	0.97	0.95	1.00	0.97	0.95	1.00
Frt	1.00	1.00	0.85	1.00	1.00	0.85	1.00	1.00	0.85	1.00	1.00	0.85
Flt Protected	0.95	1.00	1.00	0.95	1.00	1.00	0.95	1.00	1.00	0.95	1.00	1.00
Satd. Flow (prot)	1770	3539	1583	3433	3539	1583	3433	3539	1583	3433	3539	1583
Flt Permitted	0.95	1.00	1.00	0.95	1.00	1.00	0.95	1.00	1.00	0.95	1.00	1.00
Satd. Flow (perm)	1770	3539	1583	3433	3539	1583	3433	3539	1583	3433	3539	1583
Volume (vph)	331	707	220	205	282	157	116	770	296	318	491	81
Peak-hour factor, PHF	0.95	0.95	0.95	0.95	0.95	0.95	0.95	0.95	0.95	0.95	0.95	0.95
Adj. Flow (vph)	348	744	232	216	297	165	122	811	312	335	517	85
RTOR Reduction (vph)	0	0	0	0	0	0	0	0	0	0	0	0
Lane Group Flow (vph)	348	744	232	216	297	165	122	811	312	335	517	85
Turn Type	Prot		Free	Prot		Free	Prot		Free	Prot		Free
Protected Phases	7	4		3	8		5	2		1	6	
Permitted Phases			Free			Free			Free			Free
Actuated Green, G (s)	29.2	36.4	127.4	10.6	17.8	127.4	8.2	36.6	127.4	15.8	44.2	127.4
Effective Green, g (s)	33.2	40.4	127.4	14.6	21.8	127.4	12.2	40.6	127.4	19.8	48.2	127.4
Actuated g/C Ratio	0.26	0.32	1.00	0.11	0.17	1.00	0.10	0.32	1.00	0.16	0.38	1.00
Clearance Time (s)	7.0	7.0		7.0	7.0		7.0	7.0		7.0	7.0	
Vehicle Extension (s)	3.0	3.0		3.0	3.0		3.0	5.0		3.0	5.0	
Lane Grp Cap (vph)	461	1122	1583	393	606	1583	329	1128	1583	534	1339	1583
v/s Ratio Prot	c0.20	c0.21		0.06	0.08		0.04	c0.23		c0.10	0.15	
v/s Ratio Perm			0.15			0.10			0.20			0.05
v/c Ratio	0.75	0.66	0.15	0.55	0.49	0.10	0.37	0.72	0.20	0.63	0.39	0.05
Uniform Delay, d1	43.4	37.6	0.0	53.3	47.8	0.0	54.0	38.4	0.0	50.3	28.8	0.0
Progression Factor	1.00	1.00	1.00	1.00	1.00	1.00	1.00	1.00	1.00	1.00	1.00	1.00
Incremental Delay, d2	6.9	1.5	0.2	1.6	0.6	0.1	0.7	2.8	0.3	2.3	0.4	0.1
Delay (s)	50.3	39.1	0.2	54.9	48.4	0.1	54.7	41.1	0.3	52.7	29.2	0.1
Level of Service	D	D	A	D	D	A	D	D	A	D	C	A
Approach Delay (s)		35.2			38.7			32.2			35.0	
Approach LOS		D			D			C			C	

Intersection Summary

HCM Average Control Delay	34.8	HCM Level of Service	C
HCM Volume to Capacity ratio	0.70		
Actuated Cycle Length (s)	127.4	Sum of lost time (s)	9.0
Intersection Capacity Utilization	74.5%	ICU Level of Service	D
Analysis Period (min)	15		

c Critical Lane Group

HCM Signalized Intersection Capacity Analysis
11: Smith Switch Road & Loudoun County Parkway

Kincora
Total Future 2030

Movement	EBL	EBT	EBR	WBL	WBT	WBR	NBL	NBT	NBR	SBL	SBT	SBR
Lane Configurations												
Ideal Flow (vphpl)	1900	1900	1900	1900	1900	1900	1900	1900	1900	1900	1900	1900
Total Lost time (s)	4.0	4.0	4.0	4.0	4.0	4.0	4.0	4.0	4.0	4.0	4.0	4.0
Lane Util. Factor	0.97	0.95	1.00	0.97	0.95	1.00	1.00	0.91	1.00	0.97	0.91	1.00
Frt	1.00	1.00	0.85	1.00	1.00	0.85	1.00	1.00	0.85	1.00	1.00	0.85
Flt Protected	0.95	1.00	1.00	0.95	1.00	1.00	0.95	1.00	1.00	0.95	1.00	1.00
Satd. Flow (prot)	3433	3539	1583	3433	3539	1583	1770	5085	1583	3433	5085	1583
Flt Permitted	0.95	1.00	1.00	0.95	1.00	1.00	0.95	1.00	1.00	0.95	1.00	1.00
Satd. Flow (perm)	3433	3539	1583	3433	3539	1583	1770	5085	1583	3433	5085	1583
Volume (vph)	110	333	62	113	197	656	48	1557	15	260	1205	103
Peak-hour factor, PHF	0.95	0.95	0.95	0.95	0.95	0.95	0.95	0.95	0.95	0.95	0.95	0.95
Adj. Flow (vph)	116	351	65	119	207	691	51	1639	16	274	1268	108
RTOR Reduction (vph)	0	0	47	0	0	5	0	0	9	0	0	38
Lane Group Flow (vph)	116	351	18	119	207	686	51	1639	7	274	1268	70
Turn Type	Prot		pm+ov	Prot		pm+ov	Prot		pm+ov	Prot		pm+ov
Protected Phases	7	4	5	3	8	1	5	2	3	1	6	7
Permitted Phases			4			8			2			6
Actuated Green, G (s)	4.0	13.6	19.0	4.0	15.6	48.4	5.4	39.9	43.9	32.8	65.3	69.3
Effective Green, g (s)	7.0	16.6	25.0	7.0	16.6	50.4	8.4	42.9	49.9	33.8	68.3	75.3
Actuated g/C Ratio	0.06	0.14	0.21	0.06	0.14	0.43	0.07	0.37	0.43	0.29	0.59	0.65
Clearance Time (s)	7.0	7.0	7.0	7.0	5.0	5.0	7.0	7.0	7.0	5.0	7.0	7.0
Vehicle Extension (s)	2.0	4.0	2.0	2.0	2.0	2.0	2.0	3.0	2.0	2.0	3.0	2.0
Lane Grp Cap (vph)	207	505	395	207	505	740	128	1876	734	998	2986	1079
v/s Ratio Prot	0.03	0.10	0.00	c0.03	0.06	c0.27	0.03	c0.32	0.00	0.08	0.25	0.00
v/s Ratio Perm			0.01			0.16			0.00			0.04
v/c Ratio	0.56	0.70	0.05	0.57	0.41	0.93	0.40	0.87	0.01	0.27	0.42	0.06
Uniform Delay, d1	53.2	47.4	36.2	53.2	45.4	31.2	51.5	34.2	19.0	31.8	13.2	7.5
Progression Factor	1.00	1.00	1.00	1.00	1.00	1.00	1.00	1.00	1.00	1.00	1.00	1.00
Incremental Delay, d2	2.1	4.5	0.0	2.4	0.2	17.3	0.7	4.8	0.0	0.1	0.1	0.0
Delay (s)	55.2	51.9	36.2	55.6	45.6	48.5	52.3	39.0	19.0	31.9	13.3	7.6
Level of Service	E	D	D	E	D	D	D	D	B	C	B	A
Approach Delay (s)		50.7			48.7			39.2			16.0	
Approach LOS		D			D			D			B	

Intersection Summary

HCM Average Control Delay	34.6	HCM Level of Service	C
HCM Volume to Capacity ratio	0.88		
Actuated Cycle Length (s)	116.3	Sum of lost time (s)	12.0
Intersection Capacity Utilization	84.0%	ICU Level of Service	E
Analysis Period (min)	15		

c Critical Lane Group

HCM Signalized Intersection Capacity Analysis
13: Nokes Blvd & Atlantic Blvd

Kincora
Total Future 2030

Movement	EBL	EBT	EBR	WBL	WBT	WBR	NBL	NBT	NBR	SBL	SBT	SBR
Lane Configurations												
Ideal Flow (vphpl)	1900	1900	1900	1900	1900	1900	1900	1900	1900	1900	1900	1900
Total Lost time (s)	4.0	4.0	4.0	3.0	4.0	3.0	4.0	3.0	3.0	3.0	3.0	4.0
Lane Util. Factor	0.97	0.95	1.00	0.97	0.95	1.00	0.97	0.95	1.00	0.97	0.95	1.00
Frt	1.00	1.00	0.85	1.00	1.00	0.85	1.00	1.00	0.85	1.00	1.00	0.85
Flt Protected	0.95	1.00	1.00	0.95	1.00	1.00	0.95	1.00	1.00	0.95	1.00	1.00
Satd. Flow (prot)	3433	3539	1583	3433	3539	1583	3433	3539	1583	3433	3539	1583
Flt Permitted	0.95	1.00	1.00	0.95	1.00	1.00	0.95	1.00	1.00	0.95	1.00	1.00
Satd. Flow (perm)	3433	3539	1583	3433	3539	1583	3433	3539	1583	3433	3539	1583
Volume (vph)	483	349	469	121	651	65	378	86	112	39	178	164
Peak-hour factor, PHF	0.95	0.95	0.95	0.95	0.95	0.95	0.95	0.95	0.95	0.95	0.95	0.95
Adj. Flow (vph)	508	367	494	127	685	68	398	91	118	41	187	173
RTOR Reduction (vph)	0	0	0	0	0	0	0	0	75	0	0	0
Lane Group Flow (vph)	508	367	494	127	685	68	398	91	43	41	187	173
Turn Type	Prot		Free	Prot		Free	Prot		pm+ov	Prot		Free
Protected Phases	1	6		5	2		7	4	5	3	8	
Permitted Phases			Free			Free			4			Free
Actuated Green, G (s)	18.9	39.4	100.0	8.1	28.6	100.0	15.7	20.9	29.0	4.1	9.3	100.0
Effective Green, g (s)	21.9	42.4	100.0	12.1	31.6	100.0	18.7	24.4	36.5	8.1	12.8	100.0
Actuated g/C Ratio	0.22	0.42	1.00	0.12	0.32	1.00	0.19	0.24	0.36	0.08	0.13	1.00
Clearance Time (s)	7.0	7.0		7.0	7.0		7.0	6.5	7.0	7.0	6.5	
Vehicle Extension (s)	2.5	4.0		2.5	4.0		2.5	2.5	2.5	2.5	2.5	
Lane Grp Cap (vph)	752	1501	1583	415	1118	1583	642	864	625	278	453	1583
v/s Ratio Prot	c0.15	0.10		0.04	c0.19		c0.12	0.03	0.01	0.01	c0.05	
v/s Ratio Perm			0.31			0.04			0.02			0.11
v/c Ratio	0.68	0.24	0.31	0.31	0.61	0.04	0.62	0.11	0.07	0.15	0.41	0.11
Uniform Delay, d1	35.8	18.5	0.0	40.1	29.0	0.0	37.4	29.3	20.7	42.7	40.1	0.0
Progression Factor	1.00	1.00	1.00	1.00	1.00	1.00	1.00	1.00	1.00	1.00	1.00	1.00
Incremental Delay, d2	2.2	0.4	0.5	0.3	2.5	0.1	1.5	0.0	0.0	0.2	0.4	0.1
Delay (s)	38.0	18.9	0.5	40.4	31.5	0.1	38.9	29.4	20.7	42.9	40.6	0.1
Level of Service	D	B	A	D	C	A	D	C	C	D	D	A
Approach Delay (s)		19.3			30.4			33.9			23.4	
Approach LOS		B			C			C			C	

Intersection Summary

HCM Average Control Delay	25.5	HCM Level of Service	C
HCM Volume to Capacity ratio	0.60		
Actuated Cycle Length (s)	100.0	Sum of lost time (s)	15.0
Intersection Capacity Utilization	60.8%	ICU Level of Service	B
Analysis Period (min)	15		

c Critical Lane Group

HCM Signalized Intersection Capacity Analysis
14: Nokes Blvd. & Cascades Parkway

Kincora
Total Future 2030

Movement	EBL	EBT	EBR	WBL	WBT	WBR	NBL	NBT	NBR	SBL	SBT	SBR
Lane Configurations												
Ideal Flow (vphpl)	1900	1900	1900	1900	1900	1900	1900	1900	1900	1900	1900	1900
Total Lost time (s)	3.0	3.0	3.0	3.0	3.0	3.0	3.0	3.0	3.0	3.0	3.0	3.0
Lane Util. Factor	0.97	0.95	1.00	0.97	0.95	1.00	0.97	0.95	1.00	1.00	0.95	1.00
Frt	1.00	1.00	0.85	1.00	1.00	0.85	1.00	1.00	0.85	1.00	1.00	0.85
Flt Protected	0.95	1.00	1.00	0.95	1.00	1.00	0.95	1.00	1.00	0.95	1.00	1.00
Satd. Flow (prot)	3433	3539	1583	3433	3539	1583	3433	3539	1583	1770	3539	1583
Flt Permitted	0.95	1.00	1.00	0.95	1.00	1.00	0.95	1.00	1.00	0.95	1.00	1.00
Satd. Flow (perm)	3433	3539	1583	3433	3539	1583	3433	3539	1583	1770	3539	1583
Volume (vph)	72	119	79	190	602	18	161	738	220	4	765	116
Peak-hour factor, PHF	0.95	0.95	0.95	0.95	0.95	0.95	0.95	0.95	0.95	0.95	0.95	0.95
Adj. Flow (vph)	76	125	83	200	634	19	169	777	232	4	805	122
RTOR Reduction (vph)	0	0	61	0	0	14	0	0	118	0	0	75
Lane Group Flow (vph)	76	125	22	200	634	5	169	777	114	4	805	47
Turn Type	Prot		Perm	Prot		Perm	Prot		Perm	Prot		Perm
Protected Phases	7	4		3	8		1	6		5	2	
Permitted Phases			4			8			6			2
Actuated Green, G (s)	7.7	24.2	24.2	10.1	26.6	26.6	10.1	46.7	46.7	1.8	38.4	38.4
Effective Green, g (s)	11.7	29.2	29.2	14.1	31.6	31.6	14.1	51.2	51.2	5.8	42.9	42.9
Actuated g/C Ratio	0.10	0.26	0.26	0.13	0.28	0.28	0.13	0.46	0.46	0.05	0.38	0.38
Clearance Time (s)	7.0	8.0	8.0	7.0	8.0	8.0	7.0	7.5	7.5	7.0	7.5	7.5
Vehicle Extension (s)	3.0	3.0	3.0	3.0	3.0	3.0	3.0	3.0	3.0	3.0	3.0	3.0
Lane Grp Cap (vph)	358	920	412	431	996	445	431	1614	722	91	1352	605
v/s Ratio Prot	0.02	0.04		c0.06	c0.18		c0.05	0.22		0.00	c0.23	
v/s Ratio Perm			0.01			0.00			0.07			0.03
v/c Ratio	0.21	0.14	0.05	0.46	0.64	0.01	0.39	0.48	0.16	0.04	0.60	0.08
Uniform Delay, d1	46.1	31.9	31.2	45.6	35.3	29.1	45.2	21.3	17.9	50.6	27.8	22.1
Progression Factor	1.00	1.00	1.00	1.00	1.00	1.00	1.00	1.00	1.00	1.00	1.00	1.00
Incremental Delay, d2	0.3	0.1	0.1	0.8	1.3	0.0	0.6	0.2	0.1	0.2	0.7	0.1
Delay (s)	46.4	31.9	31.2	46.4	36.7	29.1	45.7	21.5	18.0	50.8	28.5	22.1
Level of Service	D	C	C	D	D	C	D	C	B	D	C	C
Approach Delay (s)		35.6			38.8			24.3			27.7	
Approach LOS		D			D			C			C	

Intersection Summary

HCM Average Control Delay	30.1	HCM Level of Service	C
HCM Volume to Capacity ratio	0.55		
Actuated Cycle Length (s)	112.3	Sum of lost time (s)	9.0
Intersection Capacity Utilization	71.6%	ICU Level of Service	C
Analysis Period (min)	15		

c Critical Lane Group

Movement	EBL	EBR	NBL	NBT	SBT	SBR
Lane Configurations						
Ideal Flow (vphpl)	1900	1900	1900	1900	1900	1900
Total Lost time (s)	3.0	3.0	3.0	3.0	3.0	3.0
Lane Util. Factor	1.00	1.00	1.00	0.95	0.95	1.00
Frt	1.00	0.85	1.00	1.00	1.00	0.85
Flt Protected	0.95	1.00	0.95	1.00	1.00	1.00
Satd. Flow (prot)	1770	1583	1770	3539	3539	1583
Flt Permitted	0.95	1.00	0.22	1.00	1.00	1.00
Satd. Flow (perm)	1770	1583	401	3539	3539	1583
Volume (vph)	97	54	172	1133	863	142
Peak-hour factor, PHF	0.95	0.95	0.95	0.95	0.95	0.95
Adj. Flow (vph)	102	57	181	1193	908	149
RTOR Reduction (vph)	0	47	0	0	0	46
Lane Group Flow (vph)	102	10	181	1193	908	103
Turn Type		Perm	pm+pt			pm+ov
Protected Phases	4		1	6	2	4
Permitted Phases		4	6			2
Actuated Green, G (s)	7.9	7.9	45.2	45.2	30.7	38.6
Effective Green, g (s)	11.9	11.9	48.7	48.7	34.2	46.1
Actuated g/C Ratio	0.18	0.18	0.73	0.73	0.51	0.69
Clearance Time (s)	7.0	7.0	7.0	6.5	6.5	7.0
Vehicle Extension (s)	3.0	3.0	4.0	4.0	4.0	3.0
Lane Grp Cap (vph)	316	283	530	2588	1817	1167
v/s Ratio Prot	c0.06		0.06	c0.34	c0.26	0.02
v/s Ratio Perm		0.01	0.19			0.05
v/c Ratio	0.32	0.04	0.34	0.46	0.50	0.09
Uniform Delay, d1	23.8	22.6	4.2	3.6	10.6	3.4
Progression Factor	1.00	1.00	1.00	1.00	1.00	1.00
Incremental Delay, d2	0.6	0.1	0.5	0.2	0.3	0.0
Delay (s)	24.4	22.7	4.7	3.8	10.9	3.4
Level of Service	C	C	A	A	B	A
Approach Delay (s)	23.8			3.9	9.8	
Approach LOS	C			A	A	

Intersection Summary

HCM Average Control Delay	7.6	HCM Level of Service	A
HCM Volume to Capacity ratio	0.46		
Actuated Cycle Length (s)	66.6	Sum of lost time (s)	9.0
Intersection Capacity Utilization	48.8%	ICU Level of Service	A
Analysis Period (min)	15		

c Critical Lane Group

Movement	EBL	EBT	EBR	WBL	WBT	WBR	NBL	NBT	NBR	SBL	SBT	SBR
Lane Configurations												
Ideal Flow (vphpl)	1900	1900	1900	1900	1900	1900	1900	1900	1900	1900	1900	1900
Lane Width	12	12	12	12	12	13	12	12	12	12	12	12
Total Lost time (s)	3.0	3.0	3.0	3.0	3.0	3.0	3.0	3.0	3.0	3.0	3.0	3.0
Lane Util. Factor	0.97	0.86	1.00	0.97	0.86	1.00	0.97	0.95	1.00	0.97	0.95	1.00
Frt	1.00	1.00	0.85	1.00	1.00	0.85	1.00	1.00	0.85	1.00	1.00	0.85
Flt Protected	0.95	1.00	1.00	0.95	1.00	1.00	0.95	1.00	1.00	0.95	1.00	1.00
Satd. Flow (prot)	3433	6408	1583	3433	6408	1636	3433	3539	1583	3433	3539	1583
Flt Permitted	0.95	1.00	1.00	0.95	1.00	1.00	0.95	1.00	1.00	0.95	1.00	1.00
Satd. Flow (perm)	3433	6408	1583	3433	6408	1636	3433	3539	1583	3433	3539	1583
Volume (vph)	258	2214	252	103	680	566	62	227	110	805	535	432
Peak-hour factor, PHF	0.95	0.95	0.95	0.95	0.95	0.95	0.95	0.95	0.95	0.95	0.95	0.95
Adj. Flow (vph)	272	2331	265	108	716	596	65	239	116	847	563	455
RTOR Reduction (vph)	0	0	0	0	0	0	0	0	5	0	0	33
Lane Group Flow (vph)	272	2331	265	108	716	596	65	239	111	847	563	422
Turn Type	Prot		Free	Prot		Free	Prot		pm+ov	Prot		pm+ov
Protected Phases	1	6		5	2		3	8	5	7	4	1
Permitted Phases			Free			Free			8			4
Actuated Green, G (s)	16.0	58.9	145.5	9.2	52.1	145.5	4.0	15.2	24.4	34.7	45.9	61.9
Effective Green, g (s)	20.0	62.9	145.5	13.2	56.1	145.5	8.0	18.7	31.9	38.7	49.4	69.4
Actuated g/C Ratio	0.14	0.43	1.00	0.09	0.39	1.00	0.05	0.13	0.22	0.27	0.34	0.48
Clearance Time (s)	7.0	7.0		7.0	7.0		7.0	6.5	7.0	7.0	6.5	7.0
Vehicle Extension (s)	2.0	3.0		2.0	3.0		2.0	2.0	2.0	2.0	2.0	2.0
Lane Grp Cap (vph)	472	2770	1583	311	2471	1636	189	455	380	913	1202	788
v/s Ratio Prot	c0.08	c0.36		0.03	0.11		0.02	0.07	0.03	c0.25	0.16	c0.07
v/s Ratio Perm			0.17			0.36			0.04			0.19
v/c Ratio	0.58	0.84	0.17	0.35	0.29	0.36	0.34	0.53	0.29	0.93	0.47	0.53
Uniform Delay, d1	58.8	36.9	0.0	62.1	30.9	0.0	66.2	59.3	47.4	52.0	37.7	26.7
Progression Factor	1.00	1.00	1.00	1.00	1.00	1.00	1.00	1.00	1.00	1.00	1.00	1.00
Incremental Delay, d2	1.1	3.3	0.2	0.2	0.3	0.6	0.4	0.5	0.2	14.9	0.1	0.4
Delay (s)	59.8	40.2	0.2	62.4	31.2	0.6	66.6	59.8	47.5	66.9	37.8	27.1
Level of Service	E	D	A	E	C	A	E	E	D	E	D	C
Approach Delay (s)		38.3			20.7			57.4			48.4	
Approach LOS		D			C			E			D	

Intersection Summary

HCM Average Control Delay	38.6	HCM Level of Service	D
HCM Volume to Capacity ratio	0.77		
Actuated Cycle Length (s)	145.5	Sum of lost time (s)	3.0
Intersection Capacity Utilization	78.8%	ICU Level of Service	D
Analysis Period (min)	15		

c Critical Lane Group

HCM Signalized Intersection Capacity Analysis
19: Farmwell Road & Smith Switch Road

Kincora
Total Future 2030

Movement	EBL	EBT	EBR	WBL	WBT	WBR	NBL	NBT	NBR	SBL	SBT	SBR
Lane Configurations												
Ideal Flow (vphpl)	1900	1900	1900	1900	1900	1900	1900	1900	1900	1900	1900	1900
Total Lost time (s)	3.0	3.0	3.0	3.0	3.0	3.0	3.0	3.0	3.0	3.0	3.0	3.0
Lane Util. Factor	1.00	0.86	1.00	1.00	0.86	1.00	1.00	0.95	1.00	1.00	0.95	1.00
Frt	1.00	1.00	0.85	1.00	1.00	0.85	1.00	1.00	0.85	1.00	1.00	0.85
Flt Protected	0.95	1.00	1.00	0.95	1.00	1.00	0.95	1.00	1.00	0.95	1.00	1.00
Satd. Flow (prot)	1770	6408	1583	1770	6408	1583	1770	3539	1583	1770	3539	1583
Flt Permitted	0.95	1.00	1.00	0.95	1.00	1.00	0.75	1.00	1.00	0.55	1.00	1.00
Satd. Flow (perm)	1770	6408	1583	1770	6408	1583	1392	3539	1583	1022	3539	1583
Volume (vph)	125	3008	58	283	1170	186	91	63	272	104	14	28
Peak-hour factor, PHF	0.95	0.95	0.95	0.95	0.95	0.95	0.95	0.95	0.95	0.95	0.95	0.95
Adj. Flow (vph)	132	3166	61	298	1232	196	96	66	286	109	15	29
RTOR Reduction (vph)	0	0	26	0	0	63	0	0	0	0	0	22
Lane Group Flow (vph)	132	3166	35	298	1232	133	96	66	286	109	15	7
Turn Type	Prot		pm+ov	Prot		pm+ov	pm+pt		Free	pm+pt		pm+ov
Protected Phases	1	6	3	5	2	7	3	8		7	4	1
Permitted Phases			6			2	8		Free	4		4
Actuated Green, G (s)	10.2	54.5	58.5	18.7	62.5	69.2	9.6	5.6	110.0	15.0	8.3	18.5
Effective Green, g (s)	14.2	58.0	64.0	22.2	66.0	74.7	15.1	9.1	110.0	20.5	11.8	26.0
Actuated g/C Ratio	0.13	0.53	0.58	0.20	0.60	0.68	0.14	0.08	1.00	0.19	0.11	0.24
Clearance Time (s)	7.0	6.5	5.0	6.5	6.5	5.0	5.0	6.5		5.0	6.5	7.0
Vehicle Extension (s)	2.0	3.0	2.0	2.0	3.0	2.0	2.0	2.0		2.0	2.0	2.0
Lane Grp Cap (vph)	228	3379	964	357	3845	1118	212	293	1583	250	380	417
v/s Ratio Prot	0.07	c0.49	0.00	c0.17	0.19	0.01	0.02	0.02		c0.03	0.00	0.00
v/s Ratio Perm			0.02			0.07	0.04		0.18	c0.05		0.00
v/c Ratio	0.58	0.94	0.04	0.83	0.32	0.12	0.45	0.23	0.18	0.44	0.04	0.02
Uniform Delay, d1	45.1	24.3	9.8	42.1	10.9	6.2	43.3	47.2	0.0	38.8	44.0	32.2
Progression Factor	1.00	1.00	1.00	1.00	1.00	1.00	1.00	1.00	1.00	1.00	1.00	1.00
Incremental Delay, d2	2.2	6.5	0.0	14.7	0.2	0.0	0.6	0.1	0.3	0.4	0.2	0.0
Delay (s)	47.3	30.7	9.8	56.9	11.1	6.2	43.8	47.3	0.3	39.3	44.2	32.2
Level of Service	D	C	A	E	B	A	D	D	A	D	D	C
Approach Delay (s)		31.0			18.5			16.5			38.4	
Approach LOS		C			B			B			D	

Intersection Summary

HCM Average Control Delay	26.3	HCM Level of Service	C
HCM Volume to Capacity ratio	0.83		
Actuated Cycle Length (s)	110.0	Sum of lost time (s)	12.0
Intersection Capacity Utilization	81.7%	ICU Level of Service	D
Analysis Period (min)	15		

c Critical Lane Group

HCM Signalized Intersection Capacity Analysis
21: Waxpool Road & Pacific Boulevard

Kincora
Total Future 2030

Movement	EBL	EBT	EBR	WBL	WBT	WBR	NBL	NBT	NBR	SBL	SBT	SBR
Lane Configurations												
Ideal Flow (vphpl)	1900	1900	1900	1900	1900	1900	1900	1900	1900	1900	1900	1900
Total Lost time (s)	3.0	3.0	3.0	3.0	3.0	3.0	3.0	3.0	3.0	3.0	3.0	3.0
Lane Util. Factor	0.94	0.86	1.00	0.97	0.86	1.00	0.97	0.95	1.00	0.97	0.95	1.00
Frt	1.00	1.00	0.85	1.00	1.00	0.85	1.00	1.00	0.85	1.00	1.00	0.85
Flt Protected	0.95	1.00	1.00	0.95	1.00	1.00	0.95	1.00	1.00	0.95	1.00	1.00
Satd. Flow (prot)	4990	6408	1583	3433	6408	1583	3433	3539	1583	3433	3539	1583
Flt Permitted	0.95	1.00	1.00	0.95	1.00	1.00	0.95	1.00	1.00	0.95	1.00	1.00
Satd. Flow (perm)	4990	6408	1583	3433	6408	1583	3433	3539	1583	3433	3539	1583
Volume (vph)	1534	3878	237	438	2888	368	262	234	105	180	114	423
Peak-hour factor, PHF	0.95	0.95	0.95	0.95	0.95	0.95	0.95	0.95	0.95	0.95	0.95	0.95
Adj. Flow (vph)	1615	4082	249	461	3040	387	276	246	111	189	120	445
RTOR Reduction (vph)	0	0	78	0	0	0	0	0	0	0	0	0
Lane Group Flow (vph)	1615	4082	171	461	3040	387	276	246	111	189	120	445
Turn Type	Prot		Perm	Prot		Free	Prot		Free	Prot		Free
Protected Phases	1	6		5	2		7	4		3	8	
Permitted Phases			6			Free			Free			Free
Actuated Green, G (s)	39.5	88.5	88.5	16.0	65.0	145.0	7.5	8.0	145.0	4.5	5.0	145.0
Effective Green, g (s)	43.5	92.5	92.5	20.0	69.0	145.0	11.5	12.0	145.0	8.5	9.0	145.0
Actuated g/C Ratio	0.30	0.64	0.64	0.14	0.48	1.00	0.08	0.08	1.00	0.06	0.06	1.00
Clearance Time (s)	7.0	7.0	7.0	7.0	7.0		7.0	7.0		7.0	7.0	
Vehicle Extension (s)	2.0	3.0	3.0	2.0	3.0		3.0	3.0		3.0	3.0	
Lane Grp Cap (vph)	1497	4088	1010	474	3049	1583	272	293	1583	201	220	1583
v/s Ratio Prot	c0.32	c0.64		0.13	0.47		c0.08	c0.07		0.06	0.03	
v/s Ratio Perm			0.11			0.24			0.07			c0.28
v/c Ratio	1.08	1.00	0.17	0.97	1.00	0.24	1.01	0.84	0.07	0.94	0.55	0.28
Uniform Delay, d1	50.8	26.2	10.7	62.2	37.9	0.0	66.8	65.6	0.0	68.0	66.0	0.0
Progression Factor	1.00	1.00	1.00	1.00	1.00	1.00	1.00	1.00	1.00	1.00	1.00	1.00
Incremental Delay, d2	47.7	13.7	0.4	34.0	15.6	0.4	58.4	18.6	0.1	46.6	2.8	0.4
Delay (s)	98.5	39.9	11.0	96.2	53.5	0.4	125.1	84.2	0.1	114.6	68.8	0.4
Level of Service	F	D	B	F	D	A	F	F	A	F	E	A
Approach Delay (s)		54.6			53.3			87.3			39.9	
Approach LOS		D			D			F			D	

Intersection Summary

HCM Average Control Delay	55.0	HCM Level of Service	E
HCM Volume to Capacity ratio	0.99		
Actuated Cycle Length (s)	145.0	Sum of lost time (s)	6.0
Intersection Capacity Utilization	96.0%	ICU Level of Service	F
Analysis Period (min)	15		

c Critical Lane Group

Movement	EBL	EBT	EBR	WBL	WBT	WBR	NBL	NBT	NBR	SBL	SBT	SBR
Lane Configurations												
Ideal Flow (vphpl)	1900	1900	1900	1900	1900	1900	1900	1900	1900	1900	1900	1900
Total Lost time (s)	3.0	3.0		3.0	3.0			3.0	3.0		3.0	
Lane Util. Factor	1.00	0.95		1.00	0.95			1.00	1.00		1.00	
Frt	1.00	0.98		1.00	1.00			1.00	0.85		0.91	
Flt Protected	0.95	1.00		0.95	1.00			0.95	1.00		0.99	
Satd. Flow (prot)	1770	3463		1770	3537			1776	1583		1676	
Flt Permitted	0.17	1.00		0.10	1.00			0.72	1.00		0.95	
Satd. Flow (perm)	318	3463		193	3537			1332	1583		1599	
Volume (vph)	24	1124	188	218	1434	7	118	3	144	4	3	14
Peak-hour factor, PHF	0.95	0.95	0.95	0.95	0.95	0.95	0.95	0.95	0.95	0.95	0.95	0.95
Adj. Flow (vph)	25	1183	198	229	1509	7	124	3	152	4	3	15
RTOR Reduction (vph)	0	9	0	0	0	0	0	0	0	0	13	0
Lane Group Flow (vph)	25	1372	0	229	1516	0	0	127	152	0	9	0
Turn Type	Perm			pm+pt			Perm		pm+ov	Perm		
Protected Phases		6		5	2			4	5		8	
Permitted Phases	6			2			4		4	8		
Actuated Green, G (s)	45.6	45.6		61.9	61.9			10.6	21.4		10.6	
Effective Green, g (s)	48.6	48.6		64.9	64.9			13.6	26.9		13.6	
Actuated g/C Ratio	0.58	0.58		0.77	0.77			0.16	0.32		0.16	
Clearance Time (s)	6.0	6.0		5.5	6.0			6.0	5.5		6.0	
Vehicle Extension (s)	4.0	4.0		2.0	4.0			3.0	2.0		3.0	
Lane Grp Cap (vph)	183	1992		396	2717			214	560		257	
v/s Ratio Prot		c0.40		c0.09	0.43				0.04			
v/s Ratio Perm	0.08			0.35				c0.10	0.05		0.01	
v/c Ratio	0.14	0.69		0.58	0.56			0.59	0.27		0.04	
Uniform Delay, d1	8.3	12.6		13.6	4.0			32.9	21.5		29.9	
Progression Factor	1.00	1.00		1.00	1.00			1.00	1.00		1.00	
Incremental Delay, d2	0.5	1.1		1.3	0.3			4.4	0.1		0.1	
Delay (s)	8.7	13.7		14.9	4.3			37.3	21.6		30.0	
Level of Service	A	B		B	A			D	C		C	
Approach Delay (s)		13.6			5.7			28.7			30.0	
Approach LOS		B			A			C			C	

Intersection Summary			
HCM Average Control Delay	10.9	HCM Level of Service	B
HCM Volume to Capacity ratio	0.65		
Actuated Cycle Length (s)	84.5	Sum of lost time (s)	9.0
Intersection Capacity Utilization	75.7%	ICU Level of Service	D
Analysis Period (min)	15		

c Critical Lane Group

Movement	EBL	EBT	WBT	WBR	SBL	SBR
Lane Configurations						
Ideal Flow (vphpl)	1900	1900	1900	1900	1900	1900
Total Lost time (s)	3.0	3.0	3.0	3.0	3.0	3.0
Lane Util. Factor	0.97	0.95	0.91	0.91	0.97	1.00
Frt	1.00	1.00	1.00	0.85	1.00	0.85
Flt Protected	0.95	1.00	1.00	1.00	0.95	1.00
Satd. Flow (prot)	3433	3539	3390	1441	3433	1583
Flt Permitted	0.95	1.00	1.00	1.00	0.95	1.00
Satd. Flow (perm)	3433	3539	3390	1441	3433	1583
Volume (vph)	758	514	624	416	329	618
Peak-hour factor, PHF	0.95	0.95	0.95	0.95	0.95	0.95
Adj. Flow (vph)	798	541	657	438	346	651
RTOR Reduction (vph)	0	0	0	15	0	449
Lane Group Flow (vph)	798	541	657	423	346	202
Turn Type	Prot			pm+ov		Perm
Protected Phases	5	2	6	4	4	
Permitted Phases				6		4
Actuated Green, G (s)	21.6	48.3	19.7	37.2	17.5	17.5
Effective Green, g (s)	25.6	52.3	23.7	45.7	22.0	22.0
Actuated g/C Ratio	0.32	0.65	0.30	0.57	0.27	0.27
Clearance Time (s)	7.0	7.0	7.0	7.5	7.5	7.5
Vehicle Extension (s)	2.0	3.0	3.0	3.0	3.0	3.0
Lane Grp Cap (vph)	1094	2305	1001	874	941	434
v/s Ratio Prot	c0.23	0.15	c0.19	c0.13	0.10	
v/s Ratio Perm				0.16		0.13
v/c Ratio	0.73	0.23	0.66	0.48	0.37	0.46
Uniform Delay, d1	24.3	5.8	24.7	10.3	23.5	24.2
Progression Factor	1.00	1.00	1.00	1.00	1.00	1.00
Incremental Delay, d2	2.1	0.1	1.6	0.4	0.2	0.8
Delay (s)	26.4	5.8	26.3	10.7	23.8	25.0
Level of Service	C	A	C	B	C	C
Approach Delay (s)		18.1	20.1		24.6	
Approach LOS		B	C		C	

Intersection Summary			
HCM Average Control Delay	20.6	HCM Level of Service	C
HCM Volume to Capacity ratio	0.62		
Actuated Cycle Length (s)	80.3	Sum of lost time (s)	6.0
Intersection Capacity Utilization	66.6%	ICU Level of Service	C
Analysis Period (min)	15		

c Critical Lane Group

HCM Signalized Intersection Capacity Analysis
24: Pacific Boulevard & Loudoun County Parkway

Kincora
Total Future 2030

Movement	EBL	EBT	EBR	WBL	WBT	WBR	NBL	NBT	NBR	SBL	SBT	SBR
Lane Configurations												
Ideal Flow (vphpl)	1900	1900	1900	1900	1900	1900	1900	1900	1900	1900	1900	1900
Total Lost time (s)	4.0		4.0	4.0		4.0	4.0	4.0	4.0	4.0	4.0	4.0
Lane Util. Factor	0.97		1.00	0.97		0.88	0.97	0.95	1.00	0.97	0.95	1.00
Frt	1.00		0.85	1.00		0.85	1.00	1.00	0.85	1.00	1.00	0.85
Flt Protected	0.95		1.00	0.95		1.00	0.95	1.00	1.00	0.95	1.00	1.00
Satd. Flow (prot)	3433		1583	3433		2787	3433	3539	1583	3433	3539	1583
Flt Permitted	0.95		1.00	0.95		1.00	0.95	1.00	1.00	0.95	1.00	1.00
Satd. Flow (perm)	3433		1583	3433		2787	3433	3539	1583	3433	3539	1583
Volume (vph)	139	0	281	27	0	324	610	1444	203	1390	1118	237
Peak-hour factor, PHF	0.95	0.95	0.95	0.95	0.95	0.95	0.95	0.95	0.95	0.95	0.95	0.95
Adj. Flow (vph)	146	0	296	28	0	341	642	1520	214	1463	1177	249
RTOR Reduction (vph)	0	0	0	0	0	0	0	0	79	0	0	81
Lane Group Flow (vph)	146	0	296	28	0	341	642	1520	135	1463	1177	168
Turn Type	Prot		Free	Prot		Free	Prot		pm+ov	Prot		pm+ov
Protected Phases	7	4		3	8		5	2	3	1	6	7
Permitted Phases			Free			Free			2			6
Actuated Green, G (s)	4.0		133.0	4.0		133.0	28.3	55.0	59.0	53.0	79.7	83.7
Effective Green, g (s)	7.0		133.0	7.0		133.0	31.3	58.0	65.0	56.0	82.7	89.7
Actuated g/C Ratio	0.05		1.00	0.05		1.00	0.24	0.44	0.49	0.42	0.62	0.67
Clearance Time (s)	7.0			7.0			7.0	7.0	7.0	7.0	7.0	7.0
Vehicle Extension (s)	2.0			2.0			2.0	3.0	2.0	2.0	3.0	2.0
Lane Grp Cap (vph)	181		1583	181		2787	808	1543	821	1445	2201	1115
v/s Ratio Prot	c0.04			0.01			0.19	c0.43	0.01	c0.43	0.33	0.01
v/s Ratio Perm			0.19			0.12			0.08			0.10
v/c Ratio	0.81		0.19	0.15		0.12	0.79	0.99	0.16	1.01	0.53	0.15
Uniform Delay, d1	62.3		0.0	60.2		0.0	47.8	37.1	18.9	38.5	14.2	7.8
Progression Factor	1.00		1.00	1.00		1.00	1.00	1.00	1.00	1.00	1.00	1.00
Incremental Delay, d2	21.3		0.3	0.1		0.1	5.1	19.3	0.0	26.8	0.3	0.0
Delay (s)	83.7		0.3	60.3		0.1	52.9	56.3	18.9	65.3	14.5	7.9
Level of Service	F		A	E		A	D	E	B	E	B	A
Approach Delay (s)		27.8			4.7			52.0			39.6	
Approach LOS		C			A			D			D	

Intersection Summary				
HCM Average Control Delay	41.5	HCM Level of Service	D	
HCM Volume to Capacity ratio	0.99			
Actuated Cycle Length (s)	133.0	Sum of lost time (s)	12.0	
Intersection Capacity Utilization	100.2%	ICU Level of Service	G	
Analysis Period (min)	15			

c Critical Lane Group

HCM Unsignalized Intersection Capacity Analysis
25: Pacific Boulevard & Richfield Way

Kincora
Total Future 2030

Movement	EBL	EBT	EBR	WBL	WBT	WBR	NBL	NBT	NBR	SBL	SBT	SBR
Lane Configurations												
Sign Control		Free			Free			Stop			Stop	
Grade		0%			0%			0%			0%	
Volume (veh/h)	0	1143	5	0	290	0	5	0	0	0	0	0
Peak Hour Factor	0.92	0.92	0.92	0.92	0.92	0.92	0.92	0.92	0.92	0.92	0.92	0.92
Hourly flow rate (vph)	0	1242	5	0	315	0	5	0	0	0	0	0
Pedestrians												
Lane Width (ft)												
Walking Speed (ft/s)												
Percent Blockage												
Right turn flare (veh)												
Median type								None			None	
Median storage veh)												
Upstream signal (ft)												
pX, platoon unblocked												
vC, conflicting volume	315			1248			1400	1558	621	936	1563	158
vC1, stage 1 conf vol												
vC2, stage 2 conf vol												
vCu, unblocked vol	315			1248			1400	1558	621	936	1563	158
tC, single (s)	4.1			4.1			7.5	6.5	6.9	7.5	6.5	6.9
tC, 2 stage (s)												
tF (s)	2.2			2.2			3.5	4.0	3.3	3.5	4.0	3.3
p0 queue free %	100			100			95	100	100	100	100	100
cM capacity (veh/h)	1242			554			100	112	430	220	111	860

Direction, Lane #	EB 1	EB 2	EB 3	EB 4	WB 1	WB 2	WB 3	WB 4	NB 1	NB 2	SB 1	SB 2
Volume Total	0	621	621	5	0	158	158	0	5	0	0	0
Volume Left	0	0	0	0	0	0	0	0	5	0	0	0
Volume Right	0	0	0	5	0	0	0	0	0	0	0	0
cSH	1700	1700	1700	1700	1700	1700	1700	1700	100	1700	1700	1700
Volume to Capacity	0.00	0.37	0.37	0.00	0.00	0.09	0.09	0.00	0.05	0.00	0.00	0.00
Queue Length 95th (ft)	0	0	0	0	0	0	0	0	4	0	0	0
Control Delay (s)	0.0	0.0	0.0	0.0	0.0	0.0	0.0	0.0	43.0	0.0	0.0	0.0
Lane LOS									E	A	A	A
Approach Delay (s)	0.0				0.0				43.0		0.0	
Approach LOS									E		A	

Intersection Summary				
Average Delay	0.1			
Intersection Capacity Utilization	41.6%	ICU Level of Service	A	
Analysis Period (min)	15			

HCM Signalized Intersection Capacity Analysis
26: Gloucester Pkwy & Pacific Boulevard

Kincora
Total Future 2030

Movement	EBL	EBT	EBR	WBL	WBT	WBR	NBL	NBT	NBR	SBL	SBT	SBR
Lane Configurations												
Ideal Flow (vphpl)	1900	1900	1900	1900	1900	1900	1900	1900	1900	1900	1900	1900
Total Lost time (s)	4.0	4.0		4.0	4.0	4.0		4.0	4.0	4.0	4.0	4.0
Lane Util. Factor	0.97	0.95		0.97	0.95	1.00		0.95	1.00	0.97	0.95	1.00
Frt	1.00	1.00		1.00	1.00	0.85		1.00	0.85	1.00	1.00	0.85
Flt Protected	0.95	1.00		0.95	1.00	1.00		1.00	1.00	0.95	1.00	1.00
Satd. Flow (prot)	3433	3539		3433	3539	1583		3539	1583	3433	3539	1583
Flt Permitted	0.95	1.00		0.95	1.00	1.00		1.00	1.00	0.95	1.00	1.00
Satd. Flow (perm)	3433	3539		3433	3539	1583		3539	1583	3433	3539	1583
Volume (vph)	324	193	0	697	395	1567	0	1183	103	407	417	132
Peak-hour factor, PHF	0.95	0.95	0.95	0.95	0.95	0.95	0.95	0.95	0.95	0.95	0.95	0.95
Adj. Flow (vph)	341	203	0	734	416	1649	0	1245	108	428	439	139
RTOR Reduction (vph)	0	0	0	0	0	0	0	0	0	0	0	47
Lane Group Flow (vph)	341	203	0	734	416	1649	0	1245	108	428	439	92
Turn Type	Prot		pm+ov	Prot		Free	Prot		Free	Prot		pm+ov
Protected Phases	7	4	5	3	8		5	2		1	6	7
Permitted Phases			4			Free			Free			6
Actuated Green, G (s)	14.7	11.4		25.8	22.5	110.3		33.1	110.3	12.0	52.1	66.8
Effective Green, g (s)	17.7	14.4		28.8	25.5	110.3		36.1	110.3	15.0	55.1	72.8
Actuated g/C Ratio	0.16	0.13		0.26	0.23	1.00		0.33	1.00	0.14	0.50	0.66
Clearance Time (s)	7.0	7.0		7.0	7.0			7.0		7.0	7.0	7.0
Vehicle Extension (s)	2.0	2.0		2.0	2.0			2.0		2.0	2.0	2.0
Lane Grp Cap (vph)	551	462		896	818	1583		1158	1583	467	1768	1102
v/s Ratio Prot	0.10	0.06		0.21	0.12			0.35		0.12	0.12	0.01
v/s Ratio Perm						c1.04			0.07			0.04
v/c Ratio	0.62	0.44		0.82	0.51	1.04		1.08	0.07	0.92	0.25	0.08
Uniform Delay, d1	43.2	44.2		38.3	36.9	55.1		37.1	0.0	47.0	15.8	6.7
Progression Factor	1.00	1.00		1.00	1.00	1.00		1.00	1.00	1.00	1.00	1.00
Incremental Delay, d2	1.5	0.2		5.6	0.2	34.3		49.1	0.1	22.3	0.0	0.0
Delay (s)	44.6	44.5		43.9	37.1	89.5		86.2	0.1	69.3	15.8	6.8
Level of Service	D	D		D	D	F		F	A	E	B	A
Approach Delay (s)		44.6			69.7			79.3			37.3	
Approach LOS		D			E			E			D	

Intersection Summary			
HCM Average Control Delay	63.9	HCM Level of Service	E
HCM Volume to Capacity ratio	1.04		
Actuated Cycle Length (s)	110.3	Sum of lost time (s)	0.0
Intersection Capacity Utilization	85.9%	ICU Level of Service	E
Analysis Period (min)	15		

c Critical Lane Group

HCM Unsignalized Intersection Capacity Analysis
27: Site Drive #9 & Pacific Boulevard

Kincora
Total Future 2030

Movement	WBL	WBR	NBT	NBR	SBL	SBT
Lane Configurations						
Sign Control	Stop		Free			Free
Grade	0%		0%			0%
Volume (veh/h)	0	83	1203	455	0	1114
Peak Hour Factor	0.95	0.95	0.95	0.95	0.95	0.95
Hourly flow rate (vph)	0	87	1266	479	0	1173
Pedestrians						
Lane Width (ft)						
Walking Speed (ft/s)						
Percent Blockage						
Right turn flare (veh)						
Median type	None					
Median storage veh)						
Upstream signal (ft)			535			850
pX, platoon unblocked	0.75	0.74			0.74	
vC, conflicting volume	2092	873			1745	
vC1, stage 1 conf vol						
vC2, stage 2 conf vol						
vCu, unblocked vol	1992	471			1655	
tC, single (s)	6.8	6.9			4.1	
tC, 2 stage (s)						
tF (s)	3.5	3.3			2.2	
p0 queue free %	100	78			100	
cM capacity (veh/h)	40	398			285	

Direction, Lane #	WB 1	NB 1	NB 2	SB 1	SB 2
Volume Total	87	844	901	586	586
Volume Left	0	0	0	0	0
Volume Right	87	0	479	0	0
cSH	398	1700	1700	1700	1700
Volume to Capacity	0.22	0.50	0.53	0.34	0.34
Queue Length 95th (ft)	21	0	0	0	0
Control Delay (s)	16.6	0.0	0.0	0.0	0.0
Lane LOS	C				
Approach Delay (s)	16.6	0.0		0.0	
Approach LOS	C				

Intersection Summary			
Average Delay	0.5		
Intersection Capacity Utilization	59.6%	ICU Level of Service	B
Analysis Period (min)	15		

Movement	WBL	WBR	NBT	NBR	SBL	SBT
Lane Configurations						
Ideal Flow (vphpl)	1900	1900	1900	1900	1900	1900
Total Lost time (s)	4.0		4.0			4.0
Lane Util. Factor	1.00		0.95			0.95
Frt	0.95		1.00			1.00
Flt Protected	0.97		1.00			1.00
Satd. Flow (prot)	1711		3533			3535
Flt Permitted	0.97		1.00			0.85
Satd. Flow (perm)	1711		3533			3006
Volume (vph)	36	24	1634	19	29	1085
Peak-hour factor, PHF	0.95	0.95	0.95	0.95	0.95	0.95
Adj. Flow (vph)	38	25	1720	20	31	1142
RTOR Reduction (vph)	19	0	1	0	0	0
Lane Group Flow (vph)	44	0	1739	0	0	1173
Turn Type					Perm	
Protected Phases	8		2			6
Permitted Phases					6	
Actuated Green, G (s)	8.9		67.4			67.4
Effective Green, g (s)	11.9		70.4			70.4
Actuated g/C Ratio	0.13		0.78			0.78
Clearance Time (s)	7.0		7.0			7.0
Vehicle Extension (s)	2.0		2.0			2.0
Lane Grp Cap (vph)	225		2754			2344
v/s Ratio Prot	c0.03		c0.49			
v/s Ratio Perm						0.39
v/c Ratio	0.20		0.63			0.50
Uniform Delay, d1	34.9		4.3			3.6
Progression Factor	1.00		1.00			1.00
Incremental Delay, d2	0.2		0.4			0.1
Delay (s)	35.1		4.7			3.7
Level of Service	D		A			A
Approach Delay (s)	35.1		4.7			3.7
Approach LOS	D		A			A

Intersection Summary			
HCM Average Control Delay	4.9	HCM Level of Service	A
HCM Volume to Capacity ratio	0.57		
Actuated Cycle Length (s)	90.3	Sum of lost time (s)	8.0
Intersection Capacity Utilization	65.8%	ICU Level of Service	C
Analysis Period (min)	15		

c Critical Lane Group

Movement	WBL	WBR	NBT	NBR	SBL	SBT
Lane Configurations						
Sign Control	Stop		Free			Free
Grade	0%		0%			0%
Volume (veh/h)	0	4	3050	24	0	956
Peak Hour Factor	0.95	0.95	0.95	0.95	0.95	0.95
Hourly flow rate (vph)	0	4	3211	25	0	1006
Pedestrians						
Lane Width (ft)						
Walking Speed (ft/s)						
Percent Blockage						
Right turn flare (veh)						
Median type	None					
Median storage veh)						
Upstream signal (ft)			844			
pX, platoon unblocked	0.69	0.69			0.69	
vC, conflicting volume	3726	1618			3236	
vC1, stage 1 conf vol						
vC2, stage 2 conf vol						
vCu, unblocked vol	4504	1446			3793	
tC, single (s)	6.8	*5.2			4.1	
tC, 2 stage (s)						
tF (s)	3.5	3.3			2.2	
p0 queue free %	100	97			100	
cM capacity (veh/h)	1	168			37	

Direction, Lane #	WB 1	NB 1	NB 2	SB 1	SB 2
Volume Total	4	2140	1095	503	503
Volume Left	0	0	0	0	0
Volume Right	4	0	25	0	0
cSH	168	1700	1700	1700	1700
Volume to Capacity	0.03	1.26	0.64	0.30	0.30
Queue Length 95th (ft)	2	0	0	0	0
Control Delay (s)	27.0	0.0	0.0	0.0	0.0
Lane LOS	D				
Approach Delay (s)	27.0	0.0		0.0	
Approach LOS	D				

Intersection Summary			
Average Delay	0.0		
Intersection Capacity Utilization	95.1%	ICU Level of Service	F
Analysis Period (min)	15		

* User Entered Value

Movement	WBL	WBR	NBT	NBR	SBL	SBT
Lane Configurations						
Sign Control	Stop		Free			Free
Grade	0%		0%			0%
Volume (veh/h)	0	4	3030	24	0	956
Peak Hour Factor	0.95	0.95	0.95	0.95	0.95	0.95
Hourly flow rate (vph)	0	4	3189	25	0	1006
Pedestrians						
Lane Width (ft)						
Walking Speed (ft/s)						
Percent Blockage						
Right turn flare (veh)						
Median type	None					
Median storage veh)						
Upstream signal (ft)						
pX, platoon unblocked						
vC, conflicting volume	3705	1607			3215	
vC1, stage 1 conf vol						
vC2, stage 2 conf vol						
vCu, unblocked vol	3705	1607			3215	
tC, single (s)	6.8	*5.2			4.1	
tC, 2 stage (s)						
tF (s)	3.5	3.3			2.2	
p0 queue free %	100	98			100	
cM capacity (veh/h)	3	204			92	

Direction, Lane #	WB 1	NB 1	NB 2	SB 1	SB 2
Volume Total	4	2126	1088	335	671
Volume Left	0	0	0	0	0
Volume Right	4	0	25	0	0
cSH	204	1700	1700	92	1700
Volume to Capacity	0.02	1.25	0.64	0.00	0.39
Queue Length 95th (ft)	2	0	0	0	0
Control Delay (s)	23.0	0.0	0.0	0.0	0.0
Lane LOS	C				
Approach Delay (s)	23.0	0.0		0.0	
Approach LOS	C				

Intersection Summary			
Average Delay		0.0	
Intersection Capacity Utilization		94.5%	ICU Level of Service F
Analysis Period (min)		15	

* User Entered Value

Movement	EBL	EBT	EBR	WBL	WBT	WBR	NBL	NBT	NBR	SBL	SBT	SBR
Lane Configurations												
Sign Control		Stop			Stop			Free			Free	
Grade		0%			0%			0%			0%	
Volume (veh/h)	0	0	95	0	0	4	0	3024	10	0	860	421
Peak Hour Factor	0.95	0.95	0.95	0.95	0.95	0.95	0.95	0.95	0.95	0.95	0.95	0.95
Hourly flow rate (vph)	0	0	100	0	0	4	0	3183	11	0	905	443
Pedestrians												
Lane Width (ft)												
Walking Speed (ft/s)												
Percent Blockage												
Right turn flare (veh)												
Median type		None			None							
Median storage veh)												
Upstream signal (ft)												
pX, platoon unblocked												
vC, conflicting volume	2723	4321	674	3741	4537	1597	1348			3194		
vC1, stage 1 conf vol												
vC2, stage 2 conf vol												
vCu, unblocked vol	2723	4321	674	3741	4537	1597	1348			3194		
tC, single (s)	7.5	6.5	6.9	7.5	6.5	*5.2	4.1			4.1		
tC, 2 stage (s)												
tF (s)	3.5	4.0	3.3	3.5	4.0	3.3	2.2			2.2		
p0 queue free %	100	100	75	100	100	98	100			100		
cM capacity (veh/h)	10	2	397	1	1	206	507			94		

Direction, Lane #	EB 1	WB 1	NB 1	NB 2	SB 1	SB 2
Volume Total	100	4	2122	1072	604	745
Volume Left	0	0	0	0	0	0
Volume Right	100	4	0	11	0	443
cSH	397	206	1700	1700	1700	1700
Volume to Capacity	0.25	0.02	1.25	0.63	0.36	0.44
Queue Length 95th (ft)	25	2	0	0	0	0
Control Delay (s)	17.1	22.8	0.0	0.0	0.0	0.0
Lane LOS	C	C				
Approach Delay (s)	17.1	22.8	0.0		0.0	
Approach LOS	C	C				

Intersection Summary			
Average Delay		0.4	
Intersection Capacity Utilization		93.9%	ICU Level of Service F
Analysis Period (min)		15	

* User Entered Value

Movement	EBL	EBR	NBL	NBT	SBT	SBR
Lane Configurations						
Sign Control	Stop			Free	Free	
Grade	0%			0%	0%	
Volume (veh/h)	0	99	0	3028	1182	430
Peak Hour Factor	0.95	0.95	0.95	0.95	0.95	0.95
Hourly flow rate (vph)	0	104	0	3187	1244	453
Pedestrians						
Lane Width (ft)						
Walking Speed (ft/s)						
Percent Blockage						
Right turn flare (veh)						
Median type	None					
Median storage veh)						
Upstream signal (ft)					936	
pX, platoon unblocked	0.70	0.70	0.70			
vC, conflicting volume	2838	622	1697			
vC1, stage 1 conf vol						
vC2, stage 2 conf vol						
vCu, unblocked vol	3193	39	1569			
tC, single (s)	6.8	6.9	4.1			
tC, 2 stage (s)						
tF (s)	3.5	3.3	2.2			
p0 queue free %	100	86	100			
cM capacity (veh/h)	5	720	293			

Direction, Lane #	EB 1	NB 1	NB 2	SB 1	SB 2	SB 3
Volume Total	104	1594	1594	622	622	453
Volume Left	0	0	0	0	0	0
Volume Right	104	0	0	0	0	453
cSH	720	1700	1700	1700	1700	1700
Volume to Capacity	0.14	0.94	0.94	0.37	0.37	0.27
Queue Length 95th (ft)	13	0	0	0	0	0
Control Delay (s)	10.8	0.0	0.0	0.0	0.0	0.0
Lane LOS	B					
Approach Delay (s)	10.8	0.0		0.0		
Approach LOS	B					

Intersection Summary			
Average Delay	0.2		
Intersection Capacity Utilization	87.0%	ICU Level of Service	E
Analysis Period (min)	15		

Movement	EBL	EBR	NBL	NBT	SBT	SBR
Lane Configurations						
Ideal Flow (vphpl)	1900	1900	1900	1900	1900	1900
Total Lost time (s)	4.0	4.0	4.0	4.0	4.0	
Lane Util. Factor	1.00	1.00	1.00	0.95	0.91	
Frt	1.00	0.85	1.00	1.00	1.00	
Flt Protected	0.95	1.00	0.95	1.00	1.00	
Satd. Flow (prot)	1770	1583	1770	3539	5076	
Flt Permitted	0.95	1.00	0.10	1.00	1.00	
Satd. Flow (perm)	1770	1583	191	3539	5076	
Volume (vph)	54	138	728	2300	1474	19
Peak-hour factor, PHF	0.95	0.95	0.95	0.95	0.95	0.95
Adj. Flow (vph)	57	145	766	2421	1552	20
RTOR Reduction (vph)	0	0	0	0	1	0
Lane Group Flow (vph)	57	145	766	2421	1571	0
Turn Type		pt+ov	pm+pt			
Protected Phases	4	4 5	5	2	6	
Permitted Phases			2			
Actuated Green, G (s)	10.1	60.1	82.0	82.0	34.0	
Effective Green, g (s)	13.1	63.1	85.0	85.0	35.0	
Actuated g/C Ratio	0.12	0.59	0.80	0.80	0.33	
Clearance Time (s)	7.0		7.0	7.0	5.0	
Vehicle Extension (s)	2.0		2.0	2.0	2.0	
Lane Grp Cap (vph)	219	941	838	2835	1674	
v/s Ratio Prot	c0.03	0.09	c0.40	0.68	0.31	
v/s Ratio Perm			c0.34			
v/c Ratio	0.26	0.15	0.91	0.85	0.94	
Uniform Delay, d1	42.1	9.6	24.0	6.6	34.5	
Progression Factor	1.00	1.00	1.00	1.00	1.00	
Incremental Delay, d2	0.2	0.0	14.0	2.6	10.4	
Delay (s)	42.3	9.6	38.0	9.2	44.9	
Level of Service	D	A	D	A	D	
Approach Delay (s)	18.9			16.2	44.9	
Approach LOS	B			B	D	

Intersection Summary			
HCM Average Control Delay	25.4	HCM Level of Service	C
HCM Volume to Capacity ratio	0.81		
Actuated Cycle Length (s)	106.1	Sum of lost time (s)	8.0
Intersection Capacity Utilization	87.6%	ICU Level of Service	E
Analysis Period (min)	15		
c Critical Lane Group			

Movement	EBL	EBR	NBL	NBT	SBT	SBR
Lane Configurations						
Ideal Flow (vphpl)	1900	1900	1900	1900	1900	1900
Total Lost time (s)	4.0	4.0	4.0	4.0	4.0	
Lane Util. Factor	1.00	1.00	1.00	0.95	0.95	
Frt	1.00	0.85	1.00	1.00	1.00	
Flt Protected	0.95	1.00	0.95	1.00	1.00	
Satd. Flow (prot)	1770	1583	1770	3539	3529	
Flt Permitted	0.95	1.00	0.09	1.00	1.00	
Satd. Flow (perm)	1770	1583	160	3539	3529	
Volume (vph)	75	208	744	1610	1286	26
Peak-hour factor, PHF	0.95	0.95	0.95	0.95	0.95	0.95
Adj. Flow (vph)	79	219	783	1695	1354	27
RTOR Reduction (vph)	0	0	0	0	1	0
Lane Group Flow (vph)	79	219	783	1695	1380	0
Turn Type		Free	pm+pt			
Protected Phases	4		5	2	6	
Permitted Phases		Free	2			
Actuated Green, G (s)	8.2	100.5	78.3	78.3	39.7	
Effective Green, g (s)	11.2	100.5	81.3	81.3	42.7	
Actuated g/C Ratio	0.11	1.00	0.81	0.81	0.42	
Clearance Time (s)	7.0		7.0	7.0	7.0	
Vehicle Extension (s)	2.0		2.0	2.0	2.0	
Lane Grp Cap (vph)	197	1583	684	2863	1499	
v/s Ratio Prot	c0.04		c0.39	0.48	0.39	
v/s Ratio Perm		0.14	c0.53			
v/c Ratio	0.40	0.14	1.14	0.59	0.92	
Uniform Delay, d1	41.5	0.0	28.6	3.5	27.3	
Progression Factor	1.00	1.00	1.00	1.00	1.00	
Incremental Delay, d2	0.5	0.2	81.7	0.2	9.4	
Delay (s)	42.0	0.2	110.3	3.7	36.7	
Level of Service	D	A	F	A	D	
Approach Delay (s)	11.3			37.4	36.7	
Approach LOS	B			D	D	

Intersection Summary

HCM Average Control Delay	35.3	HCM Level of Service	D
HCM Volume to Capacity ratio	1.04		
Actuated Cycle Length (s)	100.5	Sum of lost time (s)	8.0
Intersection Capacity Utilization	95.9%	ICU Level of Service	F
Analysis Period (min)	15		

c Critical Lane Group

Movement	EBL	EBR	NBL	NBT	SBT	SBR
Lane Configurations						
Ideal Flow (vphpl)	1900	1900	1900	1900	1900	1900
Total Lost time (s)	4.0	4.0	4.0	4.0	4.0	
Lane Util. Factor	1.00	1.00	1.00	0.95	0.95	
Frt	1.00	0.85	1.00	1.00	1.00	
Flt Protected	0.95	1.00	0.95	1.00	1.00	
Satd. Flow (prot)	1770	1583	1770	3539	3529	
Flt Permitted	0.95	1.00	0.10	1.00	1.00	
Satd. Flow (perm)	1770	1583	177	3539	3529	
Volume (vph)	65	208	744	941	1104	21
Peak-hour factor, PHF	0.95	0.95	0.95	0.95	0.95	0.95
Adj. Flow (vph)	68	219	783	991	1162	22
RTOR Reduction (vph)	0	7	0	0	1	0
Lane Group Flow (vph)	68	212	783	991	1183	0
Turn Type		pm+ov	pm+pt			
Protected Phases	4	5	5	2	6	
Permitted Phases		4	2			
Actuated Green, G (s)	7.9	44.6	78.8	78.8	35.1	
Effective Green, g (s)	10.9	50.6	81.8	81.8	38.1	
Actuated g/C Ratio	0.11	0.50	0.81	0.81	0.38	
Clearance Time (s)	7.0	7.0	7.0	7.0	7.0	
Vehicle Extension (s)	2.0	2.0	2.0	2.0	2.0	
Lane Grp Cap (vph)	192	858	772	2875	1335	
v/s Ratio Prot	c0.04	0.10	c0.40	0.28	0.34	
v/s Ratio Perm		0.04	c0.42			
v/c Ratio	0.35	0.25	1.01	0.34	0.89	
Uniform Delay, d1	41.6	14.2	26.4	2.5	29.3	
Progression Factor	1.00	1.00	1.00	1.00	1.00	
Incremental Delay, d2	0.4	0.1	36.0	0.0	7.2	
Delay (s)	42.0	14.3	62.4	2.5	36.5	
Level of Service	D	B	E	A	D	
Approach Delay (s)	20.9			28.9	36.5	
Approach LOS	C			C	D	

Intersection Summary

HCM Average Control Delay	31.0	HCM Level of Service	C
HCM Volume to Capacity ratio	0.92		
Actuated Cycle Length (s)	100.7	Sum of lost time (s)	8.0
Intersection Capacity Utilization	90.7%	ICU Level of Service	E
Analysis Period (min)	15		

c Critical Lane Group

Movement	EBL	EBT	WBT	WBR	SWL	SWR
Lane Configurations		↑↑	↑↑			↱↱
Sign Control		Free	Free		Stop	
Grade		0%	0%		0%	
Volume (veh/h)	0	843	1619	0	0	1040
Peak Hour Factor	0.95	0.95	0.95	0.95	0.95	0.95
Hourly flow rate (vph)	0	887	1704	0	0	1095
Pedestrians						
Lane Width (ft)						
Walking Speed (ft/s)						
Percent Blockage						
Right turn flare (veh)						
Median type					None	
Median storage veh)						
Upstream signal (ft)		411				
pX, platoon unblocked					0.96	
vC, conflicting volume	1704				2148	852
vC1, stage 1 conf vol						
vC2, stage 2 conf vol						
vCu, unblocked vol	1704				2154	852
tC, single (s)	4.1				6.8	6.9
tC, 2 stage (s)						
tF (s)	2.2				3.5	3.3
p0 queue free %	100				100	0
cM capacity (veh/h)	369				39	303

Direction, Lane #	EB 1	EB 2	WB 1	WB 2	SW 1	SW 2
Volume Total	444	444	852	852	547	547
Volume Left	0	0	0	0	0	0
Volume Right	0	0	0	0	547	547
cSH	1700	1700	1700	1700	303	303
Volume to Capacity	0.26	0.26	0.50	0.50	1.81	1.81
Queue Length 95th (ft)	0	0	0	0	906	906
Control Delay (s)	0.0	0.0	0.0	0.0	405.0	405.0
Lane LOS					F	F
Approach Delay (s)	0.0		0.0		405.0	
Approach LOS					F	

Intersection Summary			
Average Delay	120.3		
Intersection Capacity Utilization	87.8%	ICU Level of Service	E
Analysis Period (min)	15		

Movement	EBL	EBR	NBL	NBT	SBT	SBR
Lane Configurations	↰	↱	↰	↑↑	↑↑↱	
Ideal Flow (vphpl)	1900	1900	1900	1900	1900	1900
Total Lost time (s)	4.0	4.0	4.0	4.0	4.0	
Lane Util. Factor	1.00	1.00	1.00	0.95	0.95	
Frt	1.00	0.85	1.00	1.00	0.97	
Flt Protected	0.95	1.00	0.95	1.00	1.00	
Satd. Flow (prot)	1770	1583	1770	3539	3435	
Flt Permitted	0.95	1.00	0.09	1.00	1.00	
Satd. Flow (perm)	1770	1583	175	3539	3435	
Volume (vph)	65	207	780	225	918	225
Peak-hour factor, PHF	0.95	0.95	0.95	0.95	0.95	0.95
Adj. Flow (vph)	68	218	821	237	966	237
RTOR Reduction (vph)	0	14	0	0	20	0
Lane Group Flow (vph)	68	204	821	237	1183	0
Turn Type		pm+ov	pm+pt			
Protected Phases	4	5	5	2	6	
Permitted Phases		4	2			
Actuated Green, G (s)	5.3	49.4	86.6	86.6	35.5	
Effective Green, g (s)	8.3	55.4	89.6	89.6	38.5	
Actuated g/C Ratio	0.08	0.52	0.85	0.85	0.36	
Clearance Time (s)	7.0	7.0	7.0	7.0	7.0	
Vehicle Extension (s)	2.0	2.0	2.0	2.0	2.0	
Lane Grp Cap (vph)	139	888	857	2994	1249	
v/s Ratio Prot	c0.04	0.10	c0.43	0.07	0.34	
v/s Ratio Perm		0.03	c0.38			
v/c Ratio	0.49	0.23	0.96	0.08	0.95	
Uniform Delay, d1	46.8	13.7	24.8	1.3	32.7	
Progression Factor	1.00	1.00	1.00	1.00	1.00	
Incremental Delay, d2	1.0	0.0	20.8	0.0	14.4	
Delay (s)	47.8	13.7	45.5	1.3	47.1	
Level of Service	D	B	D	A	D	
Approach Delay (s)	21.8			35.6	47.1	
Approach LOS	C			D	D	

Intersection Summary			
HCM Average Control Delay	39.5	HCM Level of Service	D
HCM Volume to Capacity ratio	0.90		
Actuated Cycle Length (s)	105.9	Sum of lost time (s)	8.0
Intersection Capacity Utilization	91.6%	ICU Level of Service	F
Analysis Period (min)	15		
c Critical Lane Group			

HCM Signalized Intersection Capacity Analysis
5: Route 7 & Countryside Blvd.

Kincora
Total Future 2030

Movement	EBL	EBT	EBR	WBL	WBT	WBR	NBL	NBT	NBR	SBL	SBT	SBR
Lane Configurations												
Ideal Flow (vphpl)	1900	1900	1900	1900	1900	1900	1900	1900	1900	1900	1900	1900
Total Lost time (s)	3.0	3.0	3.0	3.0	3.0	3.0	3.0	3.0	3.0	3.0	3.0	3.0
Lane Util. Factor	0.97	0.86	1.00	0.97	0.86	1.00	0.97	0.95	1.00	0.97	0.95	1.00
Frt	1.00	1.00	0.85	1.00	1.00	0.85	1.00	1.00	0.85	1.00	1.00	0.85
Flt Protected	0.95	1.00	1.00	0.95	1.00	1.00	0.95	1.00	1.00	0.95	1.00	1.00
Satd. Flow (prot)	3433	6408	1583	3433	6408	1583	3433	3539	1583	3433	3539	1583
Flt Permitted	0.95	1.00	1.00	0.95	1.00	1.00	0.95	1.00	1.00	0.95	1.00	1.00
Satd. Flow (perm)	3433	6408	1583	3433	6408	1583	3433	3539	1583	3433	3539	1583
Volume (vph)	591	3114	175	651	2827	214	286	148	413	186	163	333
Peak-hour factor, PHF	0.95	0.95	0.95	0.95	0.95	0.95	0.95	0.95	0.95	0.95	0.95	0.95
Adj. Flow (vph)	622	3278	184	685	2976	225	301	156	435	196	172	351
RTOR Reduction (vph)	0	0	0	0	0	11	0	0	0	0	0	1
Lane Group Flow (vph)	622	3278	184	685	2976	214	301	156	435	196	172	350
Turn Type	Prot		Free	Prot		pm+ov	Prot		Free	Prot		pm+ov
Protected Phases	1	6		5	2	3	7	4		3	8	1
Permitted Phases			Free			2			Free			8
Actuated Green, G (s)	24.7	68.1	140.0	27.1	70.5	80.2	8.0	7.1	140.0	9.7	8.8	33.5
Effective Green, g (s)	28.7	72.1	140.0	31.1	74.5	88.2	12.0	11.1	140.0	13.7	12.8	41.5
Actuated g/C Ratio	0.20	0.51	1.00	0.22	0.53	0.63	0.09	0.08	1.00	0.10	0.09	0.30
Clearance Time (s)	7.0	7.0		7.0	7.0	7.0	7.0	7.0		7.0	7.0	7.0
Vehicle Extension (s)	2.0	2.0		3.0	2.0	2.0	2.0	2.0		2.0	2.0	2.0
Lane Grp Cap (vph)	704	3300	1583	763	3410	1031	294	281	1583	336	324	503
v/s Ratio Prot	0.18	c0.51		c0.20	0.46	0.02	c0.09	0.04		0.06	0.05	c0.14
v/s Ratio Perm			0.12			0.11			c0.27			0.08
v/c Ratio	0.88	0.99	0.12	0.90	0.87	0.21	1.02	0.56	0.27	0.58	0.53	0.70
Uniform Delay, d1	54.0	33.7	0.0	52.9	28.6	11.0	64.0	62.1	0.0	60.4	60.7	43.7
Progression Factor	1.00	1.00	1.00	1.00	1.00	1.00	1.00	1.00	1.00	1.00	1.00	1.00
Incremental Delay, d2	12.3	14.2	0.1	13.3	3.4	0.0	58.7	1.3	0.4	1.7	0.8	3.4
Delay (s)	66.3	47.9	0.1	66.2	32.0	11.1	122.7	63.4	0.4	62.1	61.6	47.0
Level of Service	E	D	A	E	C	B	F	E	A	E	E	D
Approach Delay (s)		48.6			36.8			52.7			54.6	
Approach LOS		D			D			D			D	

Intersection Summary

HCM Average Control Delay	44.6	HCM Level of Service	D
HCM Volume to Capacity ratio	0.92		
Actuated Cycle Length (s)	140.0	Sum of lost time (s)	9.0
Intersection Capacity Utilization	90.2%	ICU Level of Service	E
Analysis Period (min)	15		

c Critical Lane Group

HCM Signalized Intersection Capacity Analysis
6: Route 7 & Pallsade Parkway

Kincora
Total Future 2030

Movement	EBL	EBT	EBR	WBL	WBT	WBR	NBL	NBT	NBR	SBL	SBT	SBR
Lane Configurations												
Ideal Flow (vphpl)	1900	1900	1900	1900	1900	1900	1900	1900	1900	1900	1900	1900
Total Lost time (s)	3.0	3.0	3.0	3.0	3.0	3.0	3.0	3.0	3.0	3.0	3.0	3.0
Lane Util. Factor	0.97	0.86	1.00	1.00	0.86	1.00	0.97	1.00	1.00	0.97	1.00	1.00
Frt	1.00	1.00	0.85	1.00	1.00	0.85	1.00	1.00	0.85	1.00	1.00	0.85
Flt Protected	0.95	1.00	1.00	0.95	1.00	1.00	0.95	1.00	1.00	0.95	1.00	1.00
Satd. Flow (prot)	3433	6408	1583	1770	6408	1583	3433	1863	1583	3433	1863	1583
Flt Permitted	0.95	1.00	1.00	0.95	1.00	1.00	0.95	1.00	1.00	0.95	1.00	1.00
Satd. Flow (perm)	3433	6408	1583	1770	6408	1583	3433	1863	1583	3433	1863	1583
Volume (vph)	263	3295	25	74	3030	161	391	97	234	225	77	234
Peak-hour factor, PHF	0.95	0.95	0.95	0.95	0.95	0.95	0.95	0.95	0.95	0.95	0.95	0.95
Adj. Flow (vph)	277	3468	26	78	3189	169	412	102	246	237	81	246
RTOR Reduction (vph)	0	0	0	0	0	0	0	0	8	0	0	4
Lane Group Flow (vph)	277	3468	28	78	3189	169	412	102	238	237	81	242
Turn Type	Prot		Free	Prot		Free	Prot		pm+ov	Prot		pm+ov
Protected Phases	1	6		5	2		7	4	5	3	8	1
Permitted Phases			Free			Free			4			8
Actuated Green, G (s)	11.5	63.0	120.0	8.1	59.6	120.0	16.9	10.9	19.0	10.0	4.0	15.5
Effective Green, g (s)	15.5	67.0	120.0	12.1	63.6	120.0	20.9	14.9	27.0	14.0	8.0	23.5
Actuated g/C Ratio	0.13	0.56	1.00	0.10	0.53	1.00	0.17	0.12	0.22	0.12	0.07	0.20
Clearance Time (s)	7.0	7.0		7.0	7.0		7.0	7.0	7.0	7.0	7.0	7.0
Vehicle Extension (s)	2.0	4.0		2.0	4.0		3.0	3.0	2.0	3.0	3.0	2.0
Lane Grp Cap (vph)	443	3578	1583	178	3396	1583	598	231	396	401	124	350
v/s Ratio Prot	0.08	c0.54		0.04	0.50		c0.12	0.05	c0.06	0.07	0.04	c0.09
v/s Ratio Perm			0.02			0.11			0.09			0.06
v/c Ratio	0.63	0.97	0.02	0.44	0.94	0.11	0.69	0.44	0.60	0.59	0.65	0.69
Uniform Delay, d1	49.5	25.5	0.0	50.8	26.4	0.0	46.5	48.7	41.7	50.3	54.6	44.9
Progression Factor	1.00	1.00	1.00	1.00	1.00	1.00	1.00	1.00	1.00	1.00	1.00	1.00
Incremental Delay, d2	2.0	9.4	0.0	0.6	6.6	0.1	3.3	1.3	1.8	2.3	11.7	4.7
Delay (s)	51.5	34.9	0.0	51.4	33.0	0.1	49.8	50.0	43.4	52.6	66.3	49.6
Level of Service	D	C	A	D	C	A	D	D	D	D	E	D
Approach Delay (s)		35.9			31.8			47.8			53.3	
Approach LOS		D			C			D			D	

Intersection Summary

HCM Average Control Delay	36.5	HCM Level of Service	D
HCM Volume to Capacity ratio	0.83		
Actuated Cycle Length (s)	120.0	Sum of lost time (s)	3.0
Intersection Capacity Utilization	79.7%	ICU Level of Service	D
Analysis Period (min)	15		

c Critical Lane Group

Movement	WBL	WBR	NBT	NBR	SBL	SBT
Lane Configurations						
Ideal Flow (vphpl)	1900	1900	1900	1900	1900	1900
Total Lost time (s)	3.0	3.0	3.0		3.0	3.0
Lane Util. Factor	1.00	1.00	0.95		1.00	0.95
Frt	1.00	0.85	0.98		1.00	1.00
Flt Protected	0.95	1.00	1.00		0.95	1.00
Satd. Flow (prot)	1770	1583	3466		1770	3539
Flt Permitted	0.95	1.00	1.00		0.19	1.00
Satd. Flow (perm)	1770	1583	3466		346	3539
Volume (vph)	112	262	733	117	250	603
Peak-hour factor, PHF	0.95	0.95	0.95	0.95	0.95	0.95
Adj. Flow (vph)	118	276	772	123	263	635
RTOR Reduction (vph)	0	80	11	0	0	0
Lane Group Flow (vph)	118	196	884	0	263	635
Turn Type		pm+ov			pm+pt	
Protected Phases	4	1	2		1	6
Permitted Phases		4			6	
Actuated Green, G (s)	7.0	15.8	20.4		36.2	36.2
Effective Green, g (s)	11.0	23.8	24.9		40.7	40.7
Actuated g/C Ratio	0.19	0.41	0.43		0.71	0.71
Clearance Time (s)	7.0	7.0	7.5		7.0	7.5
Vehicle Extension (s)	2.0	2.0	2.0		2.0	2.0
Lane Grp Cap (vph)	337	735	1496		560	2496
v/s Ratio Prot	c0.07	0.06	c0.26		c0.10	0.18
v/s Ratio Perm		0.06			0.23	
v/c Ratio	0.35	0.27	0.59		0.47	0.25
Uniform Delay, d1	20.3	11.2	12.5		5.0	3.1
Progression Factor	1.00	1.00	1.00		1.00	1.00
Incremental Delay, d2	0.2	0.1	0.4		0.2	0.0
Delay (s)	20.5	11.3	12.9		5.3	3.1
Level of Service	C	B	B		A	A
Approach Delay (s)	14.0		12.9			3.7
Approach LOS	B		B			A

Intersection Summary			
HCM Average Control Delay	9.3	HCM Level of Service	A
HCM Volume to Capacity ratio	0.51		
Actuated Cycle Length (s)	57.7	Sum of lost time (s)	9.0
Intersection Capacity Utilization	54.0%	ICU Level of Service	A
Analysis Period (min)	15		

c Critical Lane Group

Movement	EBL	EBT	EBR	WBL	WBT	WBR	NBL	NBT	NBR	SBL	SBT	SBR
Lane Configurations												
Ideal Flow (vphpl)	1900	1900	1900	1900	1900	1900	1900	1900	1900	1900	1900	1900
Total Lost time (s)		4.0	4.0		4.0	4.0	4.0	4.0	4.0	4.0	4.0	4.0
Lane Util. Factor		1.00	1.00		1.00	1.00	1.00	0.95	1.00	1.00	0.95	1.00
Frt		1.00	0.85		1.00	0.85	1.00	1.00	0.85	1.00	1.00	0.85
Flt Protected		0.96	1.00		0.95	1.00	0.95	1.00	1.00	0.95	1.00	1.00
Satd. Flow (prot)		1779	1583		1770	1583	1770	3539	1583	1770	3539	1583
Flt Permitted		0.71	1.00		0.74	1.00	0.37	1.00	1.00	0.30	1.00	1.00
Satd. Flow (perm)		1323	1583		1370	1583	694	3539	1583	556	3539	1583
Volume (vph)	29	2	82	37	0	30	148	871	83	29	608	72
Peak-hour factor, PHF	0.95	0.95	0.95	0.95	0.95	0.95	0.95	0.95	0.95	0.95	0.95	0.95
Adj. Flow (vph)	31	2	86	39	0	32	156	917	87	31	640	76
RTOR Reduction (vph)	0	0	70	0	0	27	0	0	25	0	0	24
Lane Group Flow (vph)	0	33	16	0	39	5	156	917	62	31	640	52
Turn Type	Perm		pm+ov	Perm		pm+ov	pm+pt		Perm	pm+pt		Perm
Protected Phases		4	5		8	1	5	2		1	6	
Permitted Phases	4		4	8		8	2		2	6		6
Actuated Green, G (s)		4.9	10.9		4.9	7.9	67.1	61.1	61.1	61.1	58.1	58.1
Effective Green, g (s)		7.9	16.9		7.9	13.9	73.1	64.1	64.1	67.1	61.1	61.1
Actuated g/C Ratio		0.09	0.19		0.09	0.15	0.81	0.71	0.71	0.75	0.68	0.68
Clearance Time (s)		7.0	7.0		7.0	7.0	7.0	7.0	7.0	7.0	7.0	7.0
Vehicle Extension (s)		2.0	2.0		2.0	2.0	2.0	2.0	2.0	2.0	2.0	2.0
Lane Grp Cap (vph)		116	368		120	315	671	2521	1127	495	2403	1075
v/s Ratio Prot			0.00			0.00	c0.02	c0.26		0.00	0.18	
v/s Ratio Perm		0.02	0.01		c0.03	0.00	0.17		0.04	0.04		0.03
v/c Ratio		0.28	0.04		0.33	0.02	0.23	0.36	0.05	0.06	0.27	0.05
Uniform Delay, d1		38.4	29.9		38.5	32.3	2.0	5.0	3.9	3.0	5.7	4.8
Progression Factor		1.00	1.00		1.00	1.00	1.00	1.00	1.00	1.00	1.00	1.00
Incremental Delay, d2		0.5	0.0		0.6	0.0	0.1	0.4	0.1	0.0	0.3	0.1
Delay (s)		38.9	30.0		39.1	32.3	2.0	5.4	4.0	3.0	5.9	4.9
Level of Service		D	C		D	C	A	A	A	A	A	A
Approach Delay (s)		32.4			36.0			4.9			5.7	
Approach LOS		C			D			A			A	

Intersection Summary			
HCM Average Control Delay	7.8	HCM Level of Service	A
HCM Volume to Capacity ratio	0.36		
Actuated Cycle Length (s)	90.0	Sum of lost time (s)	12.0
Intersection Capacity Utilization	46.1%	ICU Level of Service	A
Analysis Period (min)	15		

c Critical Lane Group

Movement	EBL	EBT	EBR	WBL	WBT	WBR	NBL	NBT	NBR	SBL	SBT	SBR
Lane Configurations												
Ideal Flow (vphpl)	1900	1900	1900	1900	1900	1900	1900	1900	1900	1900	1900	1900
Total Lost time (s)	3.0	3.0	3.0	3.0	3.0	3.0	3.0	3.0	3.0	3.0	3.0	3.0
Lane Util. Factor	1.00	0.95	1.00	0.97	0.95	1.00	0.97	0.95	1.00	0.97	0.95	1.00
Frt	1.00	1.00	0.85	1.00	1.00	0.85	1.00	1.00	0.85	1.00	1.00	0.85
Flt Protected	0.95	1.00	1.00	0.95	1.00	1.00	0.95	1.00	1.00	0.95	1.00	1.00
Satd. Flow (prot)	1770	3539	1583	3433	3539	1583	3433	3539	1583	3433	3539	1583
Flt Permitted	0.95	1.00	1.00	0.95	1.00	1.00	0.95	1.00	1.00	0.95	1.00	1.00
Satd. Flow (perm)	1770	3539	1583	3433	3539	1583	3433	3539	1583	3433	3539	1583
Volume (vph)	290	454	220	191	704	306	334	949	146	164	1002	501
Peak-hour factor, PHF	0.95	0.95	0.95	0.95	0.95	0.95	0.95	0.95	0.95	0.95	0.95	0.95
Adj. Flow (vph)	305	478	232	201	741	322	352	999	154	173	1055	527
RTOR Reduction (vph)	0	0	0	0	0	0	0	0	0	0	0	0
Lane Group Flow (vph)	305	478	232	201	741	322	352	999	154	173	1055	527
Turn Type	Prot		Free	Prot		Free	Prot		Free	Prot		Free
Protected Phases	7	4		3	8		5	2		1	6	
Permitted Phases			Free			Free			Free			Free
Actuated Green, G (s)	27.1	48.1	150.3	10.7	31.7	150.3	15.0	54.5	150.3	9.0	48.5	150.3
Effective Green, g (s)	31.1	52.1	150.3	14.7	35.7	150.3	19.0	58.5	150.3	13.0	52.5	150.3
Actuated g/C Ratio	0.21	0.35	1.00	0.10	0.24	1.00	0.13	0.39	1.00	0.09	0.35	1.00
Clearance Time (s)	7.0	7.0		7.0	7.0		7.0	7.0		7.0	7.0	
Vehicle Extension (s)	3.0	3.0		3.0	3.0		3.0	5.0		3.0	5.0	
Lane Grp Cap (vph)	366	1227	1583	336	841	1583	434	1377	1583	297	1236	1583
v/s Ratio Prot	c0.17	0.14		0.06	c0.21		c0.10	0.28		0.05	c0.30	
v/s Ratio Perm			0.15			0.20			0.10			0.33
v/c Ratio	0.83	0.39	0.15	0.60	0.88	0.20	0.81	0.73	0.10	0.58	0.85	0.33
Uniform Delay, d1	57.1	37.1	0.0	65.0	55.3	0.0	63.9	39.1	0.0	66.0	45.3	0.0
Progression Factor	1.00	1.00	1.00	1.00	1.00	1.00	1.00	1.00	1.00	1.00	1.00	1.00
Incremental Delay, d2	14.9	0.2	0.2	2.9	10.7	0.3	11.0	2.4	0.1	2.9	6.5	0.6
Delay (s)	72.0	37.3	0.2	67.8	65.9	0.3	74.9	41.4	0.1	68.9	51.8	0.6
Level of Service	E	D	A	E	E	A	E	D	A	E	D	A
Approach Delay (s)		39.3			49.5			45.0			38.1	
Approach LOS		D			D			D			D	

Intersection Summary

HCM Average Control Delay	42.8	HCM Level of Service	D
HCM Volume to Capacity ratio	0.85		
Actuated Cycle Length (s)	150.3	Sum of lost time (s)	12.0
Intersection Capacity Utilization	86.1%	ICU Level of Service	E
Analysis Period (min)	15		

c Critical Lane Group

Movement	EBL	EBT	EBR	WBL	WBT	WBR	NBL	NBT	NBR	SBL	SBT	SBR
Lane Configurations												
Ideal Flow (vphpl)	1900	1900	1900	1900	1900	1900	1900	1900	1900	1900	1900	1900
Total Lost time (s)	4.0	4.0	4.0	4.0	4.0	4.0	4.0	4.0	4.0	4.0	4.0	4.0
Lane Util. Factor	0.97	0.95	1.00	0.97	0.95	1.00	1.00	0.91	1.00	0.97	0.91	1.00
Frt	1.00	1.00	0.85	1.00	1.00	0.85	1.00	1.00	0.85	1.00	1.00	0.85
Flt Protected	0.95	1.00	1.00	0.95	1.00	1.00	0.95	1.00	1.00	0.95	1.00	1.00
Satd. Flow (prot)	3433	3539	1583	3433	3539	1583	1770	5085	1583	3433	5085	1583
Flt Permitted	0.95	1.00	1.00	0.95	1.00	1.00	0.95	1.00	1.00	0.95	1.00	1.00
Satd. Flow (perm)	3433	3539	1583	3433	3539	1583	1770	5085	1583	3433	5085	1583
Volume (vph)	153	349	54	16	472	16	57	1709	121	843	1797	94
Peak-hour factor, PHF	0.95	0.95	0.95	0.95	0.95	0.95	0.95	0.95	0.95	0.95	0.95	0.95
Adj. Flow (vph)	161	367	57	17	497	17	60	1799	127	887	1892	99
RTOR Reduction (vph)	0	0	43	0	0	2	0	0	14	0	0	37
Lane Group Flow (vph)	161	367	14	17	497	15	60	1799	113	887	1892	62
Turn Type	Prot		pm+ov	Prot		pm+ov	Prot		pm+ov	Prot		pm+ov
Protected Phases	7	4	5	3	8	1	5	2	3	1	6	7
Permitted Phases			4			8			2			6
Actuated Green, G (s)	4.5	17.3	22.9	5.1	17.9	47.7	5.6	40.5	45.6	29.8	64.7	69.2
Effective Green, g (s)	7.5	20.3	28.9	8.1	20.9	53.7	8.6	43.5	51.6	32.8	67.7	75.2
Actuated g/C Ratio	0.06	0.17	0.24	0.07	0.17	0.44	0.07	0.36	0.43	0.27	0.56	0.62
Clearance Time (s)	7.0	7.0	7.0	7.0	7.0	7.0	7.0	7.0	7.0	7.0	7.0	7.0
Vehicle Extension (s)	4.0	4.0	2.0	2.0	2.0	2.0	2.0	3.0	2.0	2.0	3.0	4.0
Lane Grp Cap (vph)	213	595	431	230	613	757	126	1833	729	933	2852	1039
v/s Ratio Prot	c0.05	0.10	0.00	0.00	c0.14	0.01	0.03	c0.35	0.01	c0.26	0.37	0.00
v/s Ratio Perm			0.01			0.00			0.06			0.04
v/c Ratio	0.76	0.62	0.03	0.07	0.81	0.02	0.48	0.98	0.16	0.95	0.66	0.06
Uniform Delay, d1	55.7	46.6	35.2	52.8	48.0	18.8	53.9	38.2	21.2	43.2	18.5	8.9
Progression Factor	1.00	1.00	1.00	1.00	1.00	1.00	1.00	1.00	1.00	1.00	1.00	1.00
Incremental Delay, d2	15.0	2.2	0.0	0.0	7.6	0.0	1.0	16.7	0.0	18.5	0.6	0.0
Delay (s)	70.7	48.8	35.2	52.8	55.6	18.8	54.9	54.9	21.2	61.6	19.1	8.9
Level of Service	E	D	D	D	E	B	D	D	C	E	B	A
Approach Delay (s)		53.5			54.3			52.8			31.9	
Approach LOS		D			D			D			C	

Intersection Summary

HCM Average Control Delay	42.9	HCM Level of Service	D
HCM Volume to Capacity ratio	0.89		
Actuated Cycle Length (s)	120.7	Sum of lost time (s)	12.0
Intersection Capacity Utilization	87.8%	ICU Level of Service	E
Analysis Period (min)	15		

c Critical Lane Group

HCM Signalized Intersection Capacity Analysis
13: Nokes Blvd & Atlantic Blvd

Kincora
Total Future 2030

Movement	EBL	EBT	EBR	WBL	WBT	WBR	NBL	NBT	NBR	SBL	SBT	SBR
Lane Configurations												
Ideal Flow (vphpl)	1900	1900	1900	1900	1900	1900	1900	1900	1900	1900	1900	1900
Total Lost time (s)	4.0	4.0	4.0	3.0	4.0	3.0	4.0	3.0	3.0	3.0	3.0	4.0
Lane Util. Factor	0.97	0.95	1.00	0.97	0.95	1.00	0.97	0.95	1.00	0.97	0.95	1.00
Frt	1.00	1.00	0.85	1.00	1.00	0.85	1.00	1.00	0.85	1.00	1.00	0.85
Flt Protected	0.95	1.00	1.00	0.95	1.00	1.00	0.95	1.00	1.00	0.95	1.00	1.00
Satd. Flow (prot)	3433	3539	1583	3433	3539	1583	3433	3539	1583	3433	3539	1583
Flt Permitted	0.95	1.00	1.00	0.95	1.00	1.00	0.95	1.00	1.00	0.95	1.00	1.00
Satd. Flow (perm)	3433	3539	1583	3433	3539	1583	3433	3539	1583	3433	3539	1583
Volume (vph)	458	792	433	223	649	93	1129	346	287	83	206	602
Peak-hour factor, PHF	0.95	0.95	0.95	0.95	0.95	0.95	0.95	0.95	0.95	0.95	0.95	0.95
Adj. Flow (vph)	482	834	456	235	683	98	1188	364	302	87	217	634
RTOR Reduction (vph)	0	0	0	0	0	0	0	0	33	0	0	0
Lane Group Flow (vph)	482	834	456	235	683	98	1188	364	269	87	217	634
Turn Type	Prot		Free	Prot		Free	Prot		pm+ov	Prot		Free
Protected Phases	1	6		5	2		7	4	5	3	8	
Permitted Phases			Free			Free			4			Free
Actuated Green, G (s)	11.5	21.0	100.0	8.1	17.6	100.0	36.0	39.4	47.5	4.0	7.4	100.0
Effective Green, g (s)	14.5	24.0	100.0	12.1	20.6	100.0	39.0	42.9	55.0	8.0	10.9	100.0
Actuated g/C Ratio	0.14	0.24	1.00	0.12	0.21	1.00	0.39	0.43	0.55	0.08	0.11	1.00
Clearance Time (s)	7.0	7.0		7.0	7.0		7.0	6.5	7.0	7.0	6.5	
Vehicle Extension (s)	2.5	4.0		2.5	4.0		2.5	2.5	2.5	2.5	2.5	
Lane Grp Cap (vph)	498	849	1583	415	729	1583	1339	1518	918	275	386	1583
v/s Ratio Prot	c0.14	c0.24		0.07	0.19		c0.35	0.10	0.04	0.03	c0.06	
v/s Ratio Perm			0.29			0.06			0.13			c0.40
v/c Ratio	0.97	0.98	0.29	0.57	0.94	0.06	0.89	0.24	0.29	0.32	0.56	0.40
Uniform Delay, d1	42.5	37.8	0.0	41.5	39.1	0.0	28.4	18.2	12.1	43.4	42.3	0.0
Progression Factor	1.00	1.00	1.00	1.00	1.00	1.00	1.00	1.00	1.00	1.00	1.00	1.00
Incremental Delay, d2	31.8	26.9	0.5	1.4	21.1	0.1	7.4	0.1	0.1	0.5	1.5	0.8
Delay (s)	74.4	64.7	0.5	42.9	60.1	0.1	35.9	18.2	12.2	43.9	43.8	0.8
Level of Service	E	E	A	D	E	A	D	B	B	D	D	A
Approach Delay (s)		50.8			50.3			28.5			14.7	
Approach LOS		D			D			C			B	

Intersection Summary

HCM Average Control Delay	37.3	HCM Level of Service	D
HCM Volume to Capacity ratio	0.86		
Actuated Cycle Length (s)	100.0	Sum of lost time (s)	11.0
Intersection Capacity Utilization	82.2%	ICU Level of Service	E
Analysis Period (min)	15		

c Critical Lane Group

HCM Signalized Intersection Capacity Analysis
14: Nokes Blvd. & Cascades Parkway

Kincora
Total Future 2030

Movement	EBL	EBT	EBR	WBL	WBT	WBR	NBL	NBT	NBR	SBL	SBT	SBR
Lane Configurations												
Ideal Flow (vphpl)	1900	1900	1900	1900	1900	1900	1900	1900	1900	1900	1900	1900
Total Lost time (s)	3.0	3.0	3.0	3.0	3.0	3.0	3.0	3.0	3.0	3.0	3.0	3.0
Lane Util. Factor	0.97	0.95	1.00	0.97	0.95	1.00	0.97	0.95	1.00	0.97	0.95	1.00
Frt	1.00	1.00	0.85	1.00	1.00	0.85	1.00	1.00	0.85	1.00	1.00	0.85
Flt Protected	0.95	1.00	1.00	0.95	1.00	1.00	0.95	1.00	1.00	0.95	1.00	1.00
Satd. Flow (prot)	3433	3539	1583	3433	3539	1583	3433	3539	1583	3433	3539	1583
Flt Permitted	0.95	1.00	1.00	0.95	1.00	1.00	0.95	1.00	1.00	0.95	1.00	1.00
Satd. Flow (perm)	3433	3539	1583	3433	3539	1583	3433	3539	1583	3433	3539	1583
Volume (vph)	329	647	260	238	239	33	244	1477	298	4	1056	258
Peak-hour factor, PHF	0.95	0.95	0.95	0.95	0.95	0.95	0.95	0.95	0.95	0.95	0.95	0.95
Adj. Flow (vph)	346	681	274	251	252	35	257	1555	314	4	1112	272
RTOR Reduction (vph)	0	0	134	0	0	29	0	0	96	0	0	147
Lane Group Flow (vph)	346	681	140	251	252	6	257	1555	218	4	1112	125
Turn Type	Prot		Perm	Prot		Perm	Prot		Perm	Prot		Perm
Protected Phases	7	4		3	8		1	6		5	2	
Permitted Phases			4			8			6			2
Actuated Green, G (s)	15.6	24.9	24.9	10.1	19.4	19.4	11.7	66.8	66.8	1.8	56.9	56.9
Effective Green, g (s)	19.6	29.9	29.9	14.1	24.4	24.4	15.7	71.3	71.3	5.8	61.4	61.4
Actuated g/C Ratio	0.15	0.22	0.22	0.11	0.18	0.18	0.12	0.54	0.54	0.04	0.46	0.46
Clearance Time (s)	7.0	8.0	8.0	7.0	8.0	8.0	7.0	7.5	7.5	7.0	7.5	7.5
Vehicle Extension (s)	3.0	3.0	3.0	3.0	3.0	3.0	3.0	3.0	3.0	3.0	3.0	3.0
Lane Grp Cap (vph)	506	795	356	364	649	290	405	1896	848	150	1633	730
v/s Ratio Prot	c0.10	c0.19		0.07	0.07		c0.07	c0.44		0.00	0.31	
v/s Ratio Perm			0.09			0.00			0.14			0.08
v/c Ratio	0.68	0.86	0.39	0.69	0.39	0.02	0.63	0.82	0.26	0.03	0.68	0.17
Uniform Delay, d1	53.8	49.5	43.9	57.4	47.8	44.6	56.0	25.6	16.6	60.9	28.2	21.0
Progression Factor	1.00	1.00	1.00	1.00	1.00	1.00	1.00	1.00	1.00	1.00	1.00	1.00
Incremental Delay, d2	3.8	9.0	0.7	5.4	0.4	0.0	3.2	3.0	0.2	0.1	1.2	0.1
Delay (s)	57.6	58.6	44.6	62.8	48.2	44.6	59.2	28.6	16.8	61.0	29.3	21.1
Level of Service	E	E	D	E	D	D	E	C	B	E	C	C
Approach Delay (s)		55.4			54.7			30.5			27.8	
Approach LOS		E			D			C			C	

Intersection Summary

HCM Average Control Delay	38.3	HCM Level of Service	D
HCM Volume to Capacity ratio	0.80		
Actuated Cycle Length (s)	133.1	Sum of lost time (s)	9.0
Intersection Capacity Utilization	88.7%	ICU Level of Service	E
Analysis Period (min)	15		

c Critical Lane Group

Movement	EBL	EBR	NBL	NBT	SBT	SBR
Lane Configurations						
Ideal Flow (vphpl)	1900	1900	1900	1900	1900	1900
Total Lost time (s)	3.0	3.0	3.0	3.0	3.0	3.0
Lane Util. Factor	1.00	1.00	1.00	0.95	0.95	1.00
Frt	1.00	0.85	1.00	1.00	1.00	0.85
Flt Protected	0.95	1.00	0.95	1.00	1.00	1.00
Satd. Flow (prot)	1770	1583	1770	3539	3539	1583
Flt Permitted	0.95	1.00	0.07	1.00	1.00	1.00
Satd. Flow (perm)	1770	1583	127	3539	3539	1583
Volume (vph)	211	183	249	1831	1389	116
Peak-hour factor, PHF	0.95	0.95	0.95	0.95	0.95	0.95
Adj. Flow (vph)	222	193	262	1927	1462	122
RTOR Reduction (vph)	0	152	0	0	0	34
Lane Group Flow (vph)	222	41	262	1927	1462	88
Turn Type		Perm	pm+pt			pm+ov
Protected Phases	4		1	6	2	4
Permitted Phases		4	6			2
Actuated Green, G (s)	19.0	19.0	76.6	76.6	52.2	71.2
Effective Green, g (s)	23.0	23.0	80.1	80.1	55.7	78.7
Actuated g/C Ratio	0.21	0.21	0.73	0.73	0.51	0.72
Clearance Time (s)	7.0	7.0	7.0	6.5	6.5	7.0
Vehicle Extension (s)	3.0	3.0	4.0	4.0	4.0	3.0
Lane Grp Cap (vph)	373	334	416	2598	1807	1185
v/s Ratio Prot	c0.13		0.12	c0.54	c0.41	0.02
v/s Ratio Perm		0.03	0.34			0.04
v/c Ratio	0.60	0.12	0.63	0.74	0.81	0.07
Uniform Delay, d1	38.8	34.9	28.0	8.5	22.3	4.5
Progression Factor	1.00	1.00	1.00	1.00	1.00	1.00
Incremental Delay, d2	2.5	0.2	3.4	1.3	2.9	0.0
Delay (s)	41.4	35.0	31.4	9.7	25.2	4.5
Level of Service	D	D	C	A	C	A
Approach Delay (s)	38.4			12.3	23.6	
Approach LOS	D			B	C	

Intersection Summary

HCM Average Control Delay	19.2	HCM Level of Service	B
HCM Volume to Capacity ratio	0.75		
Actuated Cycle Length (s)	109.1	Sum of lost time (s)	9.0
Intersection Capacity Utilization	73.9%	ICU Level of Service	D
Analysis Period (min)	15		

c Critical Lane Group

Movement	EBL	EBT	EBR	WBL	WBT	WBR	NBL	NBT	NBR	SBL	SBT	SBR
Lane Configurations												
Ideal Flow (vphpl)	1900	1900	1900	1900	1900	1900	1900	1900	1900	1900	1900	1900
Lane Width	12	12	12	12	12	13	12	12	12	12	12	12
Total Lost time (s)	3.0	3.0	3.0	3.0	3.0	3.0	3.0	3.0	3.0	3.0	3.0	3.0
Lane Util. Factor	0.97	0.86	1.00	0.97	0.86	1.00	0.97	0.95	1.00	0.97	0.95	1.00
Frt	1.00	1.00	0.85	1.00	1.00	0.85	1.00	1.00	0.85	1.00	1.00	0.85
Flt Protected	0.95	1.00	1.00	0.95	1.00	1.00	0.95	1.00	1.00	0.95	1.00	1.00
Satd. Flow (prot)	3433	6408	1583	3433	6408	1636	3433	3539	1583	3433	3539	1583
Flt Permitted	0.95	1.00	1.00	0.95	1.00	1.00	0.95	1.00	1.00	0.95	1.00	1.00
Satd. Flow (perm)	3433	6408	1583	3433	6408	1636	3433	3539	1583	3433	3539	1583
Volume (vph)	251	1197	194	216	2847	1246	127	549	106	858	394	260
Peak-hour factor, PHF	0.95	0.95	0.95	0.95	0.95	0.95	0.95	0.95	0.95	0.95	0.95	0.95
Adj. Flow (vph)	264	1260	204	227	2997	1312	134	578	112	903	415	274
RTOR Reduction (vph)	0	0	0	0	0	0	0	0	6	0	0	50
Lane Group Flow (vph)	264	1260	204	227	2997	1312	134	578	106	903	415	224
Turn Type	Prot		Free	Prot		Free	Prot		pm+ov	Prot		pm+ov
Protected Phases	1	6		5	2		3	8	5	7	4	1
Permitted Phases			Free			Free			8			4
Actuated Green, G (s)	5.5	50.9	145.5	12.8	58.2	145.5	10.0	23.3	36.1	31.0	44.3	49.8
Effective Green, g (s)	9.5	54.9	145.5	16.8	62.2	145.5	14.0	26.8	43.6	35.0	47.8	57.3
Actuated g/C Ratio	0.07	0.38	1.00	0.12	0.43	1.00	0.10	0.18	0.30	0.24	0.33	0.39
Clearance Time (s)	7.0	7.0		7.0	7.0		7.0	6.5	7.0	7.0	6.5	7.0
Vehicle Extension (s)	2.0	3.0		2.0	3.0		2.0	2.0	2.0	2.0	2.0	2.0
Lane Grp Cap (vph)	224	2418	1583	396	2739	1636	330	652	507	826	1163	656
v/s Ratio Prot	c0.08	0.20		0.07	c0.47		0.04	0.16	0.02	c0.26	0.12	0.02
v/s Ratio Perm			0.13			c0.80			0.04			0.12
v/c Ratio	1.18	0.52	0.13	0.57	1.09	0.80	0.41	0.89	0.21	1.09	0.36	0.34
Uniform Delay, d1	68.0	35.1	0.0	61.0	41.6	0.0	61.8	57.9	38.1	55.2	37.2	30.9
Progression Factor	1.00	1.00	1.00	1.00	1.00	1.00	1.00	1.00	1.00	1.00	1.00	1.00
Incremental Delay, d2	116.8	0.8	0.2	1.2	49.0	4.3	0.3	13.4	0.1	59.9	0.1	0.1
Delay (s)	184.8	35.9	0.2	62.2	90.6	4.3	62.1	71.3	38.1	115.1	37.2	31.0
Level of Service	F	D	A	E	F	A	E	E	D	F	D	C
Approach Delay (s)		54.4			64.2			65.3			80.3	
Approach LOS		D			E			E			F	

Intersection Summary

HCM Average Control Delay	65.3	HCM Level of Service	E
HCM Volume to Capacity ratio	1.02		
Actuated Cycle Length (s)	145.5	Sum of lost time (s)	6.0
Intersection Capacity Utilization	101.4%	ICU Level of Service	G
Analysis Period (min)	15		

c Critical Lane Group

Movement	EBL	EBT	EBR	WBL	WBT	WBR	NBL	NBT	NBR	SBL	SBT	SBR
Lane Configurations												
Ideal Flow (vphpl)	1900	1900	1900	1900	1900	1900	1900	1900	1900	1900	1900	1900
Total Lost time (s)	3.0	3.0	3.0	3.0	3.0	3.0	3.0	3.0	3.0	3.0	3.0	3.0
Lane Util. Factor	1.00	0.86	1.00	1.00	0.86	1.00	1.00	0.95	1.00	1.00	0.95	1.00
Frt	1.00	1.00	0.85	1.00	1.00	0.85	1.00	1.00	0.85	1.00	1.00	0.85
Flt Protected	0.95	1.00	1.00	0.95	1.00	1.00	0.95	1.00	1.00	0.95	1.00	1.00
Satd. Flow (prot)	1770	6408	1583	1770	6408	1583	1770	3539	1583	1770	3539	1583
Flt Permitted	0.95	1.00	1.00	0.95	1.00	1.00	0.71	1.00	1.00	0.53	1.00	1.00
Satd. Flow (perm)	1770	6408	1583	1770	6408	1583	1323	3539	1583	983	3539	1583
Volume (vph)	27	2125	110	581	3792	159	147	33	484	272	65	147
Peak-hour factor, PHF	0.95	0.95	0.95	0.95	0.95	0.95	0.95	0.95	0.95	0.95	0.95	0.95
Adj. Flow (vph)	28	2237	116	612	3992	167	155	35	509	286	68	155
RTOR Reduction (vph)	0	0	68	0	0	42	0	0	0	0	0	112
Lane Group Flow (vph)	28	2237	48	612	3992	125	155	35	509	286	68	43
Turn Type	Prot		pm+ov	Prot		pm+ov	pm+pt		Free	pm+pt		Perm
Protected Phases	1	6	3	5	2	7	3	8		7	4	
Permitted Phases			6			2	8		Free	4		4
Actuated Green, G (s)	4.2	34.4	38.4	34.0	64.2	74.6	8.2	4.2	110.0	21.0	10.6	10.6
Effective Green, g (s)	8.2	37.9	45.9	38.0	67.7	82.1	15.7	7.7	110.0	25.1	14.1	14.1
Actuated g/C Ratio	0.07	0.34	0.42	0.35	0.62	0.75	0.14	0.07	1.00	0.23	0.13	0.13
Clearance Time (s)	7.0	6.5	7.0	7.0	6.5	7.0	7.0	6.5		7.0	6.5	6.5
Vehicle Extension (s)	2.0	3.0	2.0	2.0	3.0	2.0	2.0	2.0		2.0	2.0	2.0
Lane Grp Cap (vph)	132	2208	704	611	3944	1225	221	248	1583	327	454	203
v/s Ratio Prot	0.02	0.35	0.01	c0.35	c0.62	0.01	0.05	0.01		c0.11	0.02	
v/s Ratio Perm			0.03			0.07	0.05		0.32	c0.09		0.03
v/c Ratio	0.21	1.01	0.07	1.00	1.01	0.10	0.70	0.14	0.32	0.87	0.15	0.21
Uniform Delay, d1	47.9	36.0	19.2	36.0	21.1	3.8	44.3	48.0	0.0	39.5	42.6	43.0
Progression Factor	1.00	1.00	1.00	1.00	1.00	1.00	1.00	1.00	1.00	1.00	1.00	1.00
Incremental Delay, d2	0.3	22.5	0.0	36.8	17.4	0.0	7.9	0.1	0.5	21.3	0.7	2.4
Delay (s)	48.2	58.5	19.2	72.8	38.6	3.8	52.3	48.1	0.5	60.9	43.3	45.4
Level of Service	D	E	B	E	D	A	D	D	A	E	D	D
Approach Delay (s)		56.5			41.7			14.4			53.8	
Approach LOS		E			D			B			D	

Intersection Summary			
HCM Average Control Delay	44.4	HCM Level of Service	D
HCM Volume to Capacity ratio	0.97		
Actuated Cycle Length (s)	110.0	Sum of lost time (s)	6.0
Intersection Capacity Utilization	94.7%	ICU Level of Service	F
Analysis Period (min)	15		

c Critical Lane Group

Movement	EBL	EBT	EBR	WBL	WBT	WBR	NBL	NBT	NBR	SBL	SBT	SBR
Lane Configurations												
Ideal Flow (vphpl)	1900	1900	1900	1900	1900	1900	1900	1900	1900	1900	1900	1900
Total Lost time (s)	3.0	3.0	3.0	3.0	3.0	3.0	3.0	3.0	3.0	3.0	3.0	3.0
Lane Util. Factor	0.94	0.86	1.00	0.97	0.86	1.00	0.97	0.95	1.00	0.97	0.95	1.00
Frt	1.00	1.00	0.85	1.00	1.00	0.85	1.00	1.00	0.85	1.00	1.00	0.85
Flt Protected	0.95	1.00	1.00	0.95	1.00	1.00	0.95	1.00	1.00	0.95	1.00	1.00
Satd. Flow (prot)	4990	6408	1583	3433	6408	1583	3433	3539	1583	3433	3539	1583
Flt Permitted	0.95	1.00	1.00	0.95	1.00	1.00	0.95	1.00	1.00	0.95	1.00	1.00
Satd. Flow (perm)	4990	6408	1583	3433	6408	1583	3433	3539	1583	3433	3539	1583
Volume (vph)	760	2703	321	102	4774	358	440	152	675	449	269	1768
Peak-hour factor, PHF	0.95	0.95	0.95	0.95	0.95	0.95	0.95	0.95	0.95	0.95	0.95	0.95
Adj. Flow (vph)	800	2845	338	107	5025	377	463	160	711	473	283	1861
RTOR Reduction (vph)	0	0	0	0	0	0	0	0	0	0	0	0
Lane Group Flow (vph)	800	2845	338	107	5025	377	463	160	711	473	283	1861
Turn Type	Prot		Free	Prot		Free	Prot		Free	Prot		Free
Protected Phases	1	6		5	2		7	4		3	8	
Permitted Phases			Free			Free			Free			Free
Actuated Green, G (s)	15.0	90.5	145.0	6.5	82.0	145.0	13.0	6.0	145.0	14.0	7.0	145.0
Effective Green, g (s)	19.0	94.5	145.0	10.5	86.0	145.0	17.0	10.0	145.0	18.0	11.0	145.0
Actuated g/C Ratio	0.13	0.65	1.00	0.07	0.59	1.00	0.12	0.07	1.00	0.12	0.08	1.00
Clearance Time (s)	7.0	7.0		7.0	7.0		7.0	7.0		7.0	7.0	
Vehicle Extension (s)	2.0	3.0		2.0	3.0		3.0	3.0		3.0	3.0	
Lane Grp Cap (vph)	654	4176	1583	249	3801	1583	402	244	1583	426	268	1583
v/s Ratio Prot	0.16	0.44		0.03	c0.78		0.13	0.05		0.14	0.08	
v/s Ratio Perm			0.21			0.24			0.45			c1.18
v/c Ratio	1.22	0.68	0.21	0.43	1.32	0.24	1.15	0.66	0.45	1.11	1.08	1.18
Uniform Delay, d1	63.0	15.8	0.0	64.4	29.5	0.0	64.0	65.8	0.0	63.5	67.0	72.5
Progression Factor	1.00	1.00	1.00	1.00	1.00	1.00	1.00	1.00	1.00	1.00	1.00	1.00
Incremental Delay, d2	113.8	0.9	0.3	0.4	146.8	0.4	93.2	6.2	0.9	77.0	70.5	86.0
Delay (s)	176.8	16.7	0.3	64.8	176.3	0.4	157.2	72.0	0.9	140.5	137.5	158.5
Level of Service	F	B	A	E	F	A	F	E	A	F	F	F
Approach Delay (s)		47.5			162.1			63.7			153.0	
Approach LOS		D			F			E			F	

Intersection Summary			
HCM Average Control Delay	116.6	HCM Level of Service	F
HCM Volume to Capacity ratio	1.26		
Actuated Cycle Length (s)	145.0	Sum of lost time (s)	3.0
Intersection Capacity Utilization	117.0%	ICU Level of Service	H
Analysis Period (min)	15		

c Critical Lane Group

Movement	EBL	EBT	EBR	WBL	WBT	WBR	NBL	NBT	NBR	SBL	SBT	SBR
Lane Configurations												
Ideal Flow (vphpl)	1900	1900	1900	1900	1900	1900	1900	1900	1900	1900	1900	1900
Total Lost time (s)	3.0	3.0		3.0	3.0			3.0	3.0		3.0	
Lane Util. Factor	1.00	0.95		1.00	0.95			1.00	1.00		1.00	
Frt	1.00	0.99		1.00	1.00			1.00	0.85		0.94	
Flt Protected	0.95	1.00		0.95	1.00			0.95	1.00		0.98	
Satd. Flow (prot)	1770	3509		1770	3539			1775	1583		1724	
Flt Permitted	0.20	1.00		0.05	1.00			0.72	1.00		0.89	
Satd. Flow (perm)	380	3509		85	3539			1334	1583		1558	
Volume (vph)	25	2057	125	165	1256	0	180	2	262	7	3	7
Peak-hour factor, PHF	0.95	0.95	0.95	0.95	0.95	0.95	0.95	0.95	0.95	0.95	0.95	0.95
Adj. Flow (vph)	26	2165	132	174	1322	0	189	2	276	7	3	7
RTOR Reduction (vph)	0	3	0	0	0	0	0	0	0	0	6	0
Lane Group Flow (vph)	26	2294	0	174	1322	0	0	191	276	0	11	0
Turn Type	Perm			pm+pt			Perm		pm+ov	Perm		
Protected Phases		6		5	2			4	5		8	
Permitted Phases	6			2			4		4	8		
Actuated Green, G (s)	82.0	82.0		96.0	96.0			20.2	28.7		20.2	
Effective Green, g (s)	85.0	85.0		99.0	99.0			23.2	34.2		23.2	
Actuated g/C Ratio	0.66	0.66		0.77	0.77			0.18	0.27		0.18	
Clearance Time (s)	6.0	6.0		5.5	6.0			6.0	5.5		6.0	
Vehicle Extension (s)	4.0	4.0		2.0	4.0			3.0	2.0		3.0	
Lane Grp Cap (vph)	252	2327		210	2733			241	459		282	
v/s Ratio Prot		c0.65		c0.07	0.37				0.05			
v/s Ratio Perm	0.07			0.57				c0.14	0.12		0.01	
v/c Ratio	0.10	0.99		0.83	0.48			0.79	0.60		0.04	
Uniform Delay, d1	7.8	21.0		59.4	5.3			50.2	41.0		43.3	
Progression Factor	1.00	1.00		1.00	1.00			1.00	1.00		1.00	
Incremental Delay, d2	0.2	15.3		21.8	0.2			16.2	1.5		0.1	
Delay (s)	8.1	36.3		81.2	5.5			66.4	42.6		43.4	
Level of Service	A	D		F	A			E	D		D	
Approach Delay (s)		36.0			14.3			52.3			43.4	
Approach LOS		D			B			D			D	

Intersection Summary			
HCM Average Control Delay	30.3	HCM Level of Service	C
HCM Volume to Capacity ratio	0.93		
Actuated Cycle Length (s)	128.2	Sum of lost time (s)	9.0
Intersection Capacity Utilization	96.7%	ICU Level of Service	F
Analysis Period (min)	15		

c Critical Lane Group

Movement	EBL	EBT	WBT	WBR	SBL	SBR
Lane Configurations						
Ideal Flow (vphpl)	1900	1900	1900	1900	1900	1900
Total Lost time (s)	3.0	3.0	3.0	3.0	3.0	3.0
Lane Util. Factor	0.97	0.95	0.91	0.91	0.97	1.00
Frt	1.00	1.00	0.98	0.85	1.00	0.85
Flt Protected	0.95	1.00	1.00	1.00	0.95	1.00
Satd. Flow (prot)	3433	3539	3310	1441	3433	1583
Flt Permitted	0.95	1.00	1.00	1.00	0.95	1.00
Satd. Flow (perm)	3433	3539	3310	1441	3433	1583
Volume (vph)	1314	785	664	907	753	868
Peak-hour factor, PHF	0.95	0.95	0.95	0.95	0.95	0.95
Adj. Flow (vph)	1383	826	699	955	793	914
RTOR Reduction (vph)	0	0	14	3	0	481
Lane Group Flow (vph)	1383	826	815	822	793	433
Turn Type	Prot			pm+ov		Perm
Protected Phases	5	2	6	4	4	
Permitted Phases				6		4
Actuated Green, G (s)	33.0	60.0	20.0	45.5	25.5	25.5
Effective Green, g (s)	37.0	64.0	24.0	54.0	30.0	30.0
Actuated g/C Ratio	0.37	0.64	0.24	0.54	0.30	0.30
Clearance Time (s)	7.0	7.0	7.0	7.5	7.5	7.5
Vehicle Extension (s)	2.0	3.0	3.0	3.0	3.0	3.0
Lane Grp Cap (vph)	1270	2265	794	821	1030	475
v/s Ratio Prot	c0.40	0.23	c0.25	c0.30	0.23	
v/s Ratio Perm				0.27		0.27
v/c Ratio	1.09	0.36	1.03	1.00	0.77	0.91
Uniform Delay, d1	31.5	8.5	38.0	23.0	31.9	33.7
Progression Factor	1.00	1.00	1.00	1.00	1.00	1.00
Incremental Delay, d2	53.1	0.1	38.7	31.8	3.5	21.7
Delay (s)	84.6	8.6	76.7	54.8	35.4	55.4
Level of Service	F	A	E	D	D	E
Approach Delay (s)		56.2	65.8		46.1	
Approach LOS		E	E		D	

Intersection Summary			
HCM Average Control Delay	55.9	HCM Level of Service	E
HCM Volume to Capacity ratio	1.04		
Actuated Cycle Length (s)	100.0	Sum of lost time (s)	6.0
Intersection Capacity Utilization	97.0%	ICU Level of Service	F
Analysis Period (min)	15		

c Critical Lane Group

HCM Signalized Intersection Capacity Analysis
24: Pacific Blvd & Loudoun County Parkway

Kincora
Total Future 2030

Movement	EBL	EBT	EBR	WBL	WBT	WBR	NBL	NBT	NBR	SBL	SBT	SBR
Lane Configurations												
Ideal Flow (vphpl)	1900	1900	1900	1900	1900	1900	1900	1900	1900	1900	1900	1900
Total Lost time (s)	4.0		4.0	4.0		4.0	4.0	4.0	4.0	4.0	4.0	4.0
Lane Util. Factor	0.97		1.00	0.97		0.88	0.97	0.95	1.00	0.97	0.95	1.00
Frt	1.00		0.85	1.00		0.85	1.00	1.00	0.85	1.00	1.00	0.85
Flt Protected	0.95		1.00	0.95		1.00	0.95	1.00	1.00	0.95	1.00	1.00
Satd. Flow (prot)	3433		1583	3433		2787	3433	3539	1583	3433	3539	1583
Flt Permitted	0.95		1.00	0.95		1.00	0.95	1.00	1.00	0.95	1.00	1.00
Satd. Flow (perm)	3433		1583	3433		2787	3433	3539	1583	3433	3539	1583
Volume (vph)	354	0	768	257	0	1857	420	1550	117	926	1508	213
Peak-hour factor, PHF	0.95	0.95	0.95	0.95	0.95	0.95	0.95	0.95	0.95	0.95	0.95	0.95
Adj. Flow (vph)	373	0	808	271	0	1955	442	1632	123	975	1587	224
RTOR Reduction (vph)	0	0	0	0	0	0	0	0	40	0	0	57
Lane Group Flow (vph)	373	0	808	271	0	1955	442	1632	83	975	1587	167
Turn Type	Prot		Free	Prot		Free	Prot		pm+ov	Prot		pm+ov
Protected Phases	7	4		3	8		5	2	3	1	6	7
Permitted Phases			Free			Free			2			6
Actuated Green, G (s)	17.2		131.2	17.2		131.2	18.4	60.0	77.2	35.0	76.6	93.8
Effective Green, g (s)	18.2		131.2	18.2		131.2	21.4	63.0	81.2	38.0	79.6	97.8
Actuated g/C Ratio	0.14		1.00	0.14		1.00	0.16	0.48	0.62	0.29	0.61	0.75
Clearance Time (s)	5.0			5.0			7.0	7.0	5.0	7.0	7.0	5.0
Vehicle Extension (s)	2.0			2.0			2.0	3.0	2.0	2.0	3.0	2.0
Lane Grp Cap (vph)	476		1583	476		2787	560	1699	1028	994	2147	1228
v/s Ratio Prot	0.11			0.08			0.13	c0.46	0.01	c0.28	0.45	0.02
v/s Ratio Perm			0.51			c0.70			0.04			0.09
v/c Ratio	0.78		0.51	0.57		0.70	0.79	0.96	0.08	0.98	0.74	0.14
Uniform Delay, d1	54.6		0.0	52.8		0.0	52.7	32.9	10.0	46.2	18.4	4.7
Progression Factor	1.00		1.00	1.00		1.00	1.00	1.00	1.00	1.00	1.00	1.00
Incremental Delay, d2	7.6		1.2	0.9		1.5	6.7	13.7	0.0	23.8	1.4	0.0
Delay (s)	62.2		1.2	53.8		1.5	59.5	46.6	10.0	70.0	19.8	4.7
Level of Service	E		A	D		A	E	D	B	E	B	A
Approach Delay (s)		20.5			7.9			47.1			36.1	
Approach LOS		C			A			D			D	

Intersection Summary

HCM Average Control Delay	29.3	HCM Level of Service	C
HCM Volume to Capacity ratio	0.92		
Actuated Cycle Length (s)	131.2	Sum of lost time (s)	8.0
Intersection Capacity Utilization	96.0%	ICU Level of Service	F
Analysis Period (min)	15		

c Critical Lane Group

HCM Unsignalized Intersection Capacity Analysis
25: Russel Branch Pkwy & Richfield Way

Kincora
Total Future 2030

Movement	EBL	EBT	EBR	WBL	WBT	WBR	NBL	NBT	NBR	SBL	SBT	SBR
Lane Configurations												
Sign Control		Free			Free			Stop			Stop	
Grade		0%			0%			0%			0%	
Volume (veh/h)	0	514	5	0	1273	0	5	0	0	0	0	0
Peak Hour Factor	0.92	0.92	0.92	0.92	0.92	0.92	0.92	0.92	0.92	0.92	0.92	0.92
Hourly flow rate (vph)	0	559	5	0	1384	0	5	0	0	0	0	0
Pedestrians												
Lane Width (ft)												
Walking Speed (ft/s)												
Percent Blockage												
Right turn flare (veh)												
Median type								None			None	
Median storage veh)												
Upstream signal (ft)												
pX, platoon unblocked												
vC, conflicting volume	1384			564			1251	1942	279	1663	1948	892
vC1, stage 1 conf vol												
vC2, stage 2 conf vol												
vCu, unblocked vol	1384			564			1251	1942	279	1663	1948	692
tC, single (s)	4.1			4.1			7.5	6.5	6.9	7.5	6.5	6.9
tC, 2 stage (s)												
tF (s)	2.2			2.2			3.5	4.0	3.3	3.5	4.0	3.3
p0 queue free %	100			100			96	100	100	100	100	100
cM capacity (veh/h)	491			1004			129	64	718	64	64	386

Direction, Lane #	EB 1	EB 2	EB 3	EB 4	WB 1	WB 2	WB 3	WB 4	NB 1	NB 2	SB 1	SB 2
Volume Total	0	279	279	5	0	692	692	0	5	0	0	0
Volume Left	0	0	0	0	0	0	0	0	5	0	0	0
Volume Right	0	0	0	5	0	0	0	0	0	0	0	0
cSH	1700	1700	1700	1700	1700	1700	1700	1700	129	1700	1700	1700
Volume to Capacity	0.00	0.16	0.16	0.00	0.00	0.41	0.41	0.00	0.04	0.00	0.00	0.00
Queue Length 95th (ft)	0	0	0	0	0	0	0	0	3	0	0	0
Control Delay (s)	0.0	0.0	0.0	0.0	0.0	0.0	0.0	0.0	34.1	0.0	0.0	0.0
Lane LOS									D	A	A	A
Approach Delay (s)	0.0				0.0				34.1		0.0	
Approach LOS									D		A	

Intersection Summary

Average Delay	0.1		
Intersection Capacity Utilization	45.2%	ICU Level of Service	A
Analysis Period (min)	15		

HCM Signalized Intersection Capacity Analysis
26: Gloucester Pkwy & Pacific Blvd

Kincora
Total Future 2030

Movement	EBL	EBT	EBR	WBL	WBT	WBR	NBL	NBT	NBR	SBL	SBT	SBR
Lane Configurations												
Ideal Flow (vphpl)	1900	1900	1900	1900	1900	1900	1900	1900	1900	1900	1900	1900
Total Lost time (s)	4.0	4.0		4.0	4.0	4.0		4.0	4.0	4.0	4.0	4.0
Lane Util. Factor	0.97	0.91		0.97	0.95	1.00		0.95	1.00	0.97	0.95	1.00
Frt	1.00	1.00		1.00	1.00	0.85		1.00	0.85	1.00	1.00	0.85
Flt Protected	0.95	1.00		0.95	1.00	1.00		1.00	1.00	0.95	1.00	1.00
Satd. Flow (prot)	3433	5085		3433	3539	1583		3539	1583	3433	3539	1583
Flt Permitted	0.95	1.00		0.95	1.00	1.00		1.00	1.00	0.95	1.00	1.00
Satd. Flow (perm)	3433	5085		3433	3539	1583		3539	1583	3433	3539	1583
Volume (vph)	321	1033	0	145	452	794	0	651	533	1427	1793	463
Peak-hour factor, PHF	0.95	0.95	0.95	0.95	0.95	0.95	0.95	0.95	0.95	0.95	0.95	0.95
Adj. Flow (vph)	338	1087	0	153	476	836	0	685	561	1502	1887	487
RTOR Reduction (vph)	0	0	0	0	0	0	0	0	0	0	0	51
Lane Group Flow (vph)	338	1087	0	153	476	836	0	685	561	1502	1887	436
Turn Type	Prot			Prot		Free	Prot		Free	Prot		pm+ov
Protected Phases	7	4		3	8		5	2		1	6	7
Permitted Phases						Free			Free			6
Actuated Green, G (s)	17.8	33.9		2.0	18.1	136.0		23.1	136.0	51.0	81.1	98.9
Effective Green, g (s)	18.8	34.9		5.0	21.1	136.0		26.1	136.0	54.0	84.1	102.9
Actuated g/C Ratio	0.14	0.26		0.04	0.16	1.00		0.19	1.00	0.40	0.62	0.76
Clearance Time (s)	5.0	5.0		7.0	7.0			7.0		7.0	7.0	5.0
Vehicle Extension (s)	2.0	2.0		2.0	2.0			2.0		2.0	2.0	2.0
Lane Grp Cap (vph)	475	1305		126	549	1583		679	1583	1363	2188	1244
v/s Ratio Prot	0.10	c0.21		c0.04	0.13			c0.19		c0.44	0.53	0.05
v/s Ratio Perm						0.53			0.35			0.23
v/c Ratio	0.71	0.83		1.21	0.87	0.53		1.01	0.35	1.10	0.86	0.35
Uniform Delay, d1	56.0	47.8		65.5	56.1	0.0		55.0	0.0	41.0	21.2	5.5
Progression Factor	1.00	1.00		1.00	1.00	1.00		1.00	1.00	1.00	1.00	1.00
Incremental Delay, d2	4.2	4.5		148.9	13.1	1.3		36.7	0.6	57.3	3.6	0.1
Delay (s)	60.2	52.3		214.4	69.2	1.3		91.7	0.6	98.3	24.9	5.5
Level of Service	E	D		F	E	A		F	A	F	C	A
Approach Delay (s)		54.2			45.6			50.7			50.9	
Approach LOS		D			D			D			D	

Intersection Summary				
HCM Average Control Delay	50.5	HCM Level of Service	D	
HCM Volume to Capacity ratio	1.01			
Actuated Cycle Length (s)	136.0	Sum of lost time (s)	16.0	
Intersection Capacity Utilization	96.2%	ICU Level of Service	F	
Analysis Period (min)	15			

c Critical Lane Group

HCM Unsignalized Intersection Capacity Analysis
27: Site Drive #9 & Pacific Blvd

Kincora
Total Future 2030

Movement	WBL	WBR	NBT	NBR	SBL	SBT
Lane Configurations						
Sign Control	Stop		Free			Free
Grade	0%		0%			0%
Volume (veh/h)	0	450	734	193	0	1938
Peak Hour Factor	0.95	0.95	0.95	0.95	0.95	0.95
Hourly flow rate (vph)	0	474	773	203	0	2040
Pedestrians						
Lane Width (ft)						
Walking Speed (ft/s)						
Percent Blockage						
Right turn flare (veh)						
Median type	None					
Median storage veh)						
Upstream signal (ft)			535			850
pX, platoon unblocked	0.49	0.95			0.95	
vC, conflicting volume	1894	488			976	
vC1, stage 1 conf vol						
vC2, stage 2 conf vol						
vCu, unblocked vol	1500	413			925	
tC, single (s)	6.8	*5.2			4.1	
tC, 2 stage (s)						
tF (s)	3.5	3.3			2.2	
p0 queue free %	100	31			100	
cM capacity (veh/h)	56	684			700	

Direction, Lane #	WB 1	NB 1	NB 2	SB 1	SB 2
Volume Total	474	515	461	1020	1020
Volume Left	0	0	0	0	0
Volume Right	474	0	203	0	0
cSH	684	1700	1700	1700	1700
Volume to Capacity	0.69	0.30	0.27	0.60	0.60
Queue Length 95th (ft)	139	0	0	0	0
Control Delay (s)	21.2	0.0	0.0	0.0	0.0
Lane LOS	C				
Approach Delay (s)	21.2	0.0		0.0	
Approach LOS	C				

Intersection Summary				
Average Delay	2.9			
Intersection Capacity Utilization	61.0%	ICU Level of Service	B	
Analysis Period (min)	15			

* User Entered Value

Movement	WBL	WBR	NBT	NBR	SBL	SBT
Lane Configurations						
Ideal Flow (vphpl)	1900	1900	1900	1900	1900	1900
Total Lost time (s)	4.0		4.0			4.0
Lane Util. Factor	1.00		0.95			0.95
Frt	0.95		0.99			1.00
Flt Protected	0.97		1.00			1.00
Satd. Flow (prot)	1711		3509			3533
Flt Permitted	0.97		1.00			0.87
Satd. Flow (perm)	1711		3509			3089
Volume (vph)	95	64	751	45	67	1871
Peak-hour factor, PHF	0.95	0.95	0.95	0.95	0.95	0.95
Adj. Flow (vph)	100	67	791	47	71	1969
RTOR Reduction (vph)	18	0	4	0	0	0
Lane Group Flow (vph)	149	0	834	0	0	2040
Turn Type					Perm	
Protected Phases	8		2			6
Permitted Phases					6	
Actuated Green, G (s)	11.4		73.9			73.9
Effective Green, g (s)	14.4		76.9			76.9
Actuated g/C Ratio	0.15		0.77			0.77
Clearance Time (s)	7.0		7.0			7.0
Vehicle Extension (s)	2.0		2.0			2.0
Lane Grp Cap (vph)	248		2717			2392
v/s Ratio Prot	c0.09		0.24			
v/s Ratio Perm						c0.66
v/c Ratio	0.60		0.31			0.85
Uniform Delay, d1	39.8		3.3			7.4
Progression Factor	1.00		1.00			1.00
Incremental Delay, d2	2.8		0.0			3.0
Delay (s)	42.6		3.3			10.5
Level of Service	D		A			B
Approach Delay (s)	42.6		3.3			10.5
Approach LOS	D		A			B

Intersection Summary			
HCM Average Control Delay	10.3	HCM Level of Service	B
HCM Volume to Capacity ratio	0.81		
Actuated Cycle Length (s)	99.3	Sum of lost time (s)	8.0
Intersection Capacity Utilization	95.0%	ICU Level of Service	F
Analysis Period (min)	15		

c Critical Lane Group

Movement	WBL	WBR	NBT	NBR	SBL	SBT
Lane Configurations						
Sign Control	Stop		Free			Free
Grade	0%		0%			0%
Volume (veh/h)	0	11	1709	56	0	3683
Peak Hour Factor	0.95	0.95	0.95	0.95	0.95	0.95
Hourly flow rate (vph)	0	12	1799	59	0	3877
Pedestrians						
Lane Width (ft)						
Walking Speed (ft/s)						
Percent Blockage						
Right turn flare (veh)						
Median type	None					
Median storage veh)						
Upstream signal (ft)			844			
pX, platoon unblocked	0.82	0.82			0.82	
vC, conflicting volume	3767	929			1858	
vC1, stage 1 conf vol						
vC2, stage 2 conf vol						
vCu, unblocked vol	4148	698			1827	
tC, single (s)	6.8	6.9			4.1	
tC, 2 stage (s)						
tF (s)	3.5	3.3			2.2	
p0 queue free %	100	96			100	
cM capacity (veh/h)	1	315			272	

Direction, Lane #	WB 1	NB 1	NB 2	SB 1	SB 2
Volume Total	12	1199	659	1938	1938
Volume Left	0	0	0	0	0
Volume Right	12	0	59	0	0
cSH	315	1700	1700	1700	1700
Volume to Capacity	0.04	0.71	0.39	1.14	1.14
Queue Length 95th (ft)	3	0	0	0	0
Control Delay (s)	16.9	0.0	0.0	0.0	0.0
Lane LOS	C				
Approach Delay (s)	16.9	0.0		0.0	
Approach LOS	C				

Intersection Summary			
Average Delay	0.0		
Intersection Capacity Utilization	105.1%	ICU Level of Service	G
Analysis Period (min)	15		

Movement	WBL	WBR	NBT	NBR	SBL	SBT
Lane Configurations						
Sign Control	Stop		Free			Free
Grade	0%		0%			0%
Volume (veh/h)	0	11	1664	56	0	3683
Peak Hour Factor	0.95	0.95	0.95	0.95	0.95	0.95
Hourly flow rate (vph)	0	12	1752	59	0	3877
Pedestrians						
Lane Width (ft)						
Walking Speed (ft/s)						
Percent Blockage						
Right turn flare (veh)						
Median type	None					
Median storage veh)						
Upstream signal (ft)						
pX, platoon unblocked						
vC, conflicting volume	3719	905			1811	
vC1, stage 1 conf vol						
vC2, stage 2 conf vol						
vCu, unblocked vol	3719	905			1811	
tC, single (s)	6.8	6.9			4.1	
tC, 2 stage (s)						
tF (s)	3.5	3.3			2.2	
p0 queue free %	100	96			100	
cM capacity (veh/h)	3	279			336	

Direction, Lane #	WB 1	NB 1	NB 2	SB 1	SB 2
Volume Total	12	1168	643	1938	1938
Volume Left	0	0	0	0	0
Volume Right	12	0	59	0	0
cSH	279	1700	1700	1700	1700
Volume to Capacity	0.04	0.69	0.38	1.14	1.14
Queue Length 95th (ft)	3	0	0	0	0
Control Delay (s)	18.4	0.0	0.0	0.0	0.0
Lane LOS	C				
Approach Delay (s)	18.4	0.0		0.0	
Approach LOS	C				

Intersection Summary			
Average Delay	0.0		
Intersection Capacity Utilization	105.1%	ICU Level of Service	G
Analysis Period (min)	15		

Movement	EBL	EBT	EBR	WBL	WBT	WBR	NBL	NBT	NBR	SBL	SBT	SBR
Lane Configurations												
Sign Control		Stop			Stop			Free			Free	
Grade		0%			0%			0%			0%	
Volume (veh/h)	0	0	482	0	0	11	0	1652	22	0	3201	115
Peak Hour Factor	0.95	0.95	0.95	0.95	0.95	0.95	0.95	0.95	0.95	0.95	0.95	0.95
Hourly flow rate (vph)	0	0	507	0	0	12	0	1739	23	0	3369	121
Pedestrians												
Lane Width (ft)												
Walking Speed (ft/s)												
Percent Blockage												
Right turn flare (veh)												
Median type		None			None							
Median storage veh)												
Upstream signal (ft)												
pX, platoon unblocked												
vC, conflicting volume	4311	5192	1745	3435	5241	881	3491			1762		
vC1, stage 1 conf vol												
vC2, stage 2 conf vol												
vCu, unblocked vol	4311	5192	1745	3435	5241	881	3491			1762		
tC, single (s)	7.5	6.5	*5.2	7.5	6.5	6.9	4.1			4.1		
tC, 2 stage (s)												
tF (s)	3.5	4.0	3.3	3.5	4.0	3.3	2.2			2.2		
p0 queue free %	100	100	0	0	100	96	100			100		
cM capacity (veh/h)	1	0	175	0	0	290	71			350		

Direction, Lane #	EB 1	WB 1	NB 1	NB 2	SB 1	SB 2
Volume Total	507	12	1159	603	2246	1244
Volume Left	0	0	0	0	0	0
Volume Right	507	12	0	23	0	121
cSH	175	290	1700	1700	1700	1700
Volume to Capacity	2.89	0.04	0.68	0.35	1.32	0.73
Queue Length 95th (ft)	1142	3	0	0	0	0
Control Delay (s)	907.8	17.9	0.0	0.0	0.0	0.0
Lane LOS	F	C				
Approach Delay (s)	907.8	17.9	0.0		0.0	
Approach LOS	F	C				

Intersection Summary			
Average Delay	79.8		
Intersection Capacity Utilization	128.7%	ICU Level of Service	H
Analysis Period (min)	15		

* User Entered Value

Movement	EBL	EBR	NBL	NBT	SBT	SBR
Lane Configurations						
Sign Control	Stop			Free	Free	
Grade	0%			0%	0%	
Volume (veh/h)	0	493	0	1663	2824	137
Peak Hour Factor	0.95	0.95	0.95	0.95	0.95	0.95
Hourly flow rate (vph)	0	519	0	1751	2973	144
Pedestrians						
Lane Width (ft)						
Walking Speed (ft/s)						
Percent Blockage						
Right turn flare (veh)						
Median type	None					
Median storage veh)						
Upstream signal (ft)					936	
pX, platoon unblocked	0.50	0.50	0.50			
vC, conflicting volume	3848	1486	3117			
vC1, stage 1 conf vol						
vC2, stage 2 conf vol						
vCu, unblocked vol	5679	977	4224			
tC, single (s)	6.8	*5.2	4.1			
tC, 2 stage (s)						
tF (s)	3.5	3.3	2.2			
p0 queue free %	100	0	100			
cM capacity (veh/h)	0	201	18			

Direction, Lane #	EB 1	NB 1	NB 2	SB 1	SB 2	SB 3
Volume Total	519	875	875	1486	1486	144
Volume Left	0	0	0	0	0	0
Volume Right	519	0	0	0	0	144
cSH	201	1700	1700	1700	1700	1700
Volume to Capacity	2.58	0.51	0.51	0.87	0.87	0.08
Queue Length 95th (ft)	1103	0	0	0	0	0
Control Delay (s)	760.2	0.0	0.0	0.0	0.0	0.0
Lane LOS	F					
Approach Delay (s)	760.2	0.0		0.0		
Approach LOS	F					

Intersection Summary			
Average Delay	73.2		
Intersection Capacity Utilization	115.3%	ICU Level of Service	H
Analysis Period (min)	15		

* User Entered Value

Movement	EBL	EBR	NBL	NBT	SBT	SBR
Lane Configurations						
Ideal Flow (vphpl)	1900	1900	1900	1900	1900	1900
Total Lost time (s)	4.0	4.0	4.0	4.0	4.0	
Lane Util. Factor	1.00	1.00	1.00	0.95	0.91	
Frt	1.00	0.85	1.00	1.00	1.00	
Flt Protected	0.95	1.00	0.95	1.00	1.00	
Satd. Flow (prot)	1770	1583	1770	3539	5071	
Flt Permitted	0.95	1.00	0.09	1.00	1.00	
Satd. Flow (perm)	1770	1583	162	3539	5071	
Volume (vph)	281	681	337	1326	2279	45
Peak-hour factor, PHF	0.95	0.95	0.95	0.95	0.95	0.95
Adj. Flow (vph)	296	717	355	1396	2399	47
RTOR Reduction (vph)	0	1	0	0	2	0
Lane Group Flow (vph)	296	716	355	1396	2444	0
Turn Type		pt+ov	pm+pt			
Protected Phases	4	4 5	5	2	6	
Permitted Phases			2			
Actuated Green, G (s)	20.0	37.0	56.0	56.0	39.0	
Effective Green, g (s)	23.0	40.0	59.0	59.0	42.0	
Actuated g/C Ratio	0.26	0.44	0.66	0.66	0.47	
Clearance Time (s)	7.0		7.0	7.0	7.0	
Vehicle Extension (s)	2.0		2.0	2.0	2.0	
Lane Grp Cap (vph)	452	704	338	2320	2366	
v/s Ratio Prot	0.17	c0.45	0.15	0.39	0.48	
v/s Ratio Perm			c0.54			
v/c Ratio	0.65	1.02	1.05	0.60	1.03	
Uniform Delay, d1	30.0	25.0	40.7	8.8	24.0	
Progression Factor	1.00	1.00	1.00	1.00	1.00	
Incremental Delay, d2	2.6	38.4	62.7	0.3	27.6	
Delay (s)	32.6	63.4	103.5	9.1	51.6	
Level of Service	C	E	F	A	D	
Approach Delay (s)	54.4			28.2	51.6	
Approach LOS	D			C	D	

Intersection Summary			
HCM Average Control Delay	44.3	HCM Level of Service	D
HCM Volume to Capacity ratio	1.02		
Actuated Cycle Length (s)	90.0	Sum of lost time (s)	4.0
Intersection Capacity Utilization	93.9%	ICU Level of Service	F
Analysis Period (min)	15		
c Critical Lane Group			

Movement	EBL	EBR	NBL	NBT	SBT	SBR
Lane Configurations						
Ideal Flow (vphpl)	1900	1900	1900	1900	1900	1900
Total Lost time (s)	4.0	4.0	4.0	4.0	4.0	4.0
Lane Util. Factor	1.00	1.00	1.00	0.95	0.95	1.00
Frt	1.00	0.85	1.00	1.00	1.00	0.85
Flt Protected	0.95	1.00	0.95	1.00	1.00	1.00
Satd. Flow (prot)	1770	1583	1770	3539	3539	1583
Flt Permitted	0.95	1.00	0.09	1.00	1.00	1.00
Satd. Flow (perm)	1770	1583	159	3539	3539	1583
Volume (vph)	336	679	414	1192	1646	67
Peak-hour factor, PHF	0.95	0.95	0.95	0.95	0.95	0.95
Adj. Flow (vph)	354	715	436	1255	1733	71
RTOR Reduction (vph)	0	0	0	0	0	23
Lane Group Flow (vph)	354	715	436	1255	1733	48
Turn Type		Free	pm+pt			pm+ov
Protected Phases	4		5	2	6	4
Permitted Phases		Free	2			6
Actuated Green, G (s)	15.0	90.0	61.0	61.0	40.0	55.0
Effective Green, g (s)	18.0	90.0	64.0	64.0	43.0	61.0
Actuated g/C Ratio	0.20	1.00	0.71	0.71	0.48	0.68
Clearance Time (s)	7.0		7.0	7.0	7.0	7.0
Vehicle Extension (s)	2.0		2.0	2.0	2.0	2.0
Lane Grp Cap (vph)	354	1583	417	2517	1691	1143
v/s Ratio Prot	c0.20		c0.20	0.35	0.49	0.01
v/s Ratio Perm		0.45	c0.55			0.02
v/c Ratio	1.00	0.45	1.05	0.50	1.02	0.04
Uniform Delay, d1	36.0	0.0	38.7	5.8	23.5	4.8
Progression Factor	1.00	1.00	1.00	1.00	1.00	1.00
Incremental Delay, d2	47.8	0.9	56.5	0.1	28.4	0.0
Delay (s)	83.8	0.9	95.2	5.9	51.9	4.8
Level of Service	F	A	F	A	D	A
Approach Delay (s)	28.4			28.9	50.1	
Approach LOS	C			C	D	

Intersection Summary				
HCM Average Control Delay	37.2	HCM Level of Service	D
HCM Volume to Capacity ratio	1.02		
Actuated Cycle Length (s)	90.0	Sum of lost time (s)	8.0
Intersection Capacity Utilization	97.1%	ICU Level of Service	F
Analysis Period (min)	15		
c Critical Lane Group			

Movement	EBL	EBR	NBL	NBT	SBT	SBR
Lane Configurations						
Ideal Flow (vphpl)	1900	1900	1900	1900	1900	1900
Total Lost time (s)	4.0	4.0	4.0	4.0	4.0	
Lane Util. Factor	1.00	1.00	1.00	0.95	0.95	
Frt	1.00	0.85	1.00	1.00	0.99	
Flt Protected	0.95	1.00	0.95	1.00	1.00	
Satd. Flow (prot)	1770	1583	1770	3539	3512	
Flt Permitted	0.95	1.00	0.11	1.00	1.00	
Satd. Flow (perm)	1770	1583	207	3539	3512	
Volume (vph)	286	679	414	1115	1033	55
Peak-hour factor, PHF	0.95	0.95	0.95	0.95	0.95	0.95
Adj. Flow (vph)	301	715	436	1174	1087	58
RTOR Reduction (vph)	0	11	0	0	4	0
Lane Group Flow (vph)	301	704	436	1174	1141	0
Turn Type		pm+ov	pm+pt			
Protected Phases	4	5	5	2	6	
Permitted Phases		4	2			
Actuated Green, G (s)	14.2	34.8	56.6	56.6	29.0	
Effective Green, g (s)	17.2	40.8	59.6	59.6	32.0	
Actuated g/C Ratio	0.20	0.48	0.70	0.70	0.38	
Clearance Time (s)	7.0	7.0	7.0	7.0	7.0	
Vehicle Extension (s)	2.0	2.0	2.0	2.0	2.0	
Lane Grp Cap (vph)	359	836	580	2487	1325	
v/s Ratio Prot	0.17	c0.23	0.21	0.33	c0.32	
v/s Ratio Perm		0.21	0.32			
v/c Ratio	0.84	0.84	0.75	0.47	0.86	
Uniform Delay, d1	32.5	19.2	19.8	5.6	24.3	
Progression Factor	1.00	1.00	1.00	1.00	1.00	
Incremental Delay, d2	15.0	7.4	4.9	0.1	5.8	
Delay (s)	47.4	26.6	24.7	5.7	30.1	
Level of Service	D	C	C	A	C	
Approach Delay (s)	32.7			10.8	30.1	
Approach LOS	C			B	C	

Intersection Summary			
HCM Average Control Delay	22.6	HCM Level of Service	C
HCM Volume to Capacity ratio	0.85		
Actuated Cycle Length (s)	84.8	Sum of lost time (s)	8.0
Intersection Capacity Utilization	79.1%	ICU Level of Service	D
Analysis Period (min)	15		
c Critical Lane Group			

Movement	EBL	EBT	WBT	WBR	SWL	SWR
Lane Configurations		↑↑	↑↑			↱↱
Sign Control		Free	Free		Stop	
Grade		0%	0%		0%	
Volume (veh/h)	0	2984	704	0	0	687
Peak Hour Factor	0.95	0.95	0.95	0.95	0.95	0.95
Hourly flow rate (vph)	0	3141	741	0	0	723
Pedestrians						
Lane Width (ft)						
Walking Speed (ft/s)						
Percent Blockage						
Right turn flare (veh)						
Median type					None	
Median storage veh)						
Upstream signal (ft)		411				
pX, platoon unblocked					0.77	
vC, conflicting volume	741				2312	371
vC1, stage 1 conf vol						
vC2, stage 2 conf vol						
vCu, unblocked vol	741				2403	371
tC, single (s)	4.1				6.8	6.9
tC, 2 stage (s)						
tF (s)	2.2				3.5	3.3
p0 queue free %	100				100	0
cM capacity (veh/h)	862				21	627

Direction, Lane #	EB 1	EB 2	WB 1	WB 2	SW 1	SW 2
Volume Total	1571	1571	371	371	362	362
Volume Left	0	0	0	0	0	0
Volume Right	0	0	0	0	362	362
cSH	1700	1700	1700	1700	627	627
Volume to Capacity	0.92	0.92	0.22	0.22	0.58	0.58
Queue Length 95th (ft)	0	0	0	0	92	92
Control Delay (s)	0.0	0.0	0.0	0.0	18.3	18.3
Lane LOS					C	C
Approach Delay (s)	0.0		0.0		18.3	
Approach LOS					C	

Intersection Summary			
Average Delay	2.9		
Intersection Capacity Utilization	85.8%	ICU Level of Service	E
Analysis Period (min)	15		

Movement	EBL	EBR	NBL	NBT	SBT	SBR
Lane Configurations	↰	↱	↰	↑↑	↑↳	
Ideal Flow (vphpl)	1900	1900	1900	1900	1900	1900
Total Lost time (s)	4.0	4.0	4.0	4.0	4.0	
Lane Util. Factor	1.00	1.00	1.00	0.95	0.95	
Frt	1.00	0.86	1.00	1.00	0.97	
Flt Protected	0.95	1.00	0.95	1.00	1.00	
Satd. Flow (prot)	1770	1611	1770	3539	3440	
Flt Permitted	0.95	1.00	0.26	1.00	1.00	
Satd. Flow (perm)	1770	1611	491	3539	3440	
Volume (vph)	286	670	276	1126	418	96
Peak-hour factor, PHF	0.95	0.95	0.95	0.95	0.95	0.95
Adj. Flow (vph)	301	705	291	1185	440	101
RTOR Reduction (vph)	0	51	0	0	21	0
Lane Group Flow (vph)	301	654	291	1185	520	0
Turn Type		pm+ov	pm+pt			
Protected Phases	4	5	5	2	6	
Permitted Phases		4	2			
Actuated Green, G (s)	15.7	29.5	35.3	35.3	14.5	
Effective Green, g (s)	18.7	35.5	38.3	38.3	17.5	
Actuated g/C Ratio	0.29	0.55	0.59	0.59	0.27	
Clearance Time (s)	7.0	7.0	7.0	7.0	7.0	
Vehicle Extension (s)	2.0	2.0	2.0	2.0	2.0	
Lane Grp Cap (vph)	509	979	620	2085	926	
v/s Ratio Prot	0.17	c0.17	0.12	c0.33	0.15	
v/s Ratio Perm		0.23	0.16			
v/c Ratio	0.59	0.67	0.47	0.57	0.56	
Uniform Delay, d1	19.9	10.5	7.5	8.2	20.4	
Progression Factor	1.00	1.00	1.00	1.00	1.00	
Incremental Delay, d2	1.2	1.4	0.2	0.2	0.5	
Delay (s)	21.1	11.9	7.7	8.5	20.9	
Level of Service	C	B	A	A	C	
Approach Delay (s)	14.6			8.3	20.9	
Approach LOS	B			A	C	

Intersection Summary			
HCM Average Control Delay	12.7	HCM Level of Service	B
HCM Volume to Capacity ratio	0.62		
Actuated Cycle Length (s)	65.0	Sum of lost time (s)	4.0
Intersection Capacity Utilization	62.8%	ICU Level of Service	B
Analysis Period (min)	15		
c Critical Lane Group			

HCM Signalized Intersection Capacity Analysis
11: Smith Switch Road & Loudoun County Parkway

Kincora
Total Future 2030

Movement	EBL	EBT	EBR	WBL	WBT	WBR	NBL	NBT	NBR	SBL	SBT	SBR
Lane Configurations												
Ideal Flow (vphpl)	1900	1900	1900	1900	1900	1900	1900	1900	1900	1900	1900	1900
Total Lost time (s)	4.0	4.0	4.0	4.0	4.0	4.0	4.0	4.0	4.0	4.0	4.0	4.0
Lane Util. Factor	0.97	0.95	1.00	0.97	0.95	1.00	1.00	0.91	1.00	0.97	0.91	1.00
Frt	1.00	1.00	0.85	1.00	1.00	0.85	1.00	1.00	0.85	1.00	1.00	0.85
Flt Protected	0.95	1.00	1.00	0.95	1.00	1.00	0.95	1.00	1.00	0.95	1.00	1.00
Satd. Flow (prot)	3433	3539	1583	3433	3539	1583	1770	5085	1583	3433	5085	1583
Flt Permitted	0.95	1.00	1.00	0.95	1.00	1.00	0.95	1.00	1.00	0.95	1.00	1.00
Satd. Flow (perm)	3433	3539	1583	3433	3539	1583	1770	5085	1583	3433	5085	1583
Volume (vph)	102	492	5	9	344	459	11	909	10	451	847	70
Peak-hour factor, PHF	0.95	0.95	0.95	0.95	0.95	0.95	0.95	0.95	0.95	0.95	0.95	0.95
Adj. Flow (vph)	107	518	5	9	362	483	12	957	11	475	892	74
RTOR Reduction (vph)	0	0	3	0	0	30	0	0	7	0	0	33
Lane Group Flow (vph)	107	518	2	9	362	453	12	957	4	475	892	41
Turn Type	Prot		pm+ov	Prot		pm+ov	Prot		pm+ov	Prot		pm+ov
Protected Phases	7	4	5	3	8	1	5	2	3	1	6	7
Permitted Phases			4			8			2			6
Actuated Green, G (s)	5.9	23.0	26.2	1.7	18.8	36.6	3.2	29.0	30.7	17.8	43.6	49.5
Effective Green, g (s)	8.9	26.0	32.2	4.7	21.8	42.6	6.2	32.0	36.7	20.8	46.6	55.5
Actuated g/C Ratio	0.09	0.26	0.32	0.05	0.22	0.43	0.06	0.32	0.37	0.21	0.47	0.56
Clearance Time (s)	7.0	7.0	7.0	7.0	7.0	7.0	7.0	7.0	7.0	7.0	7.0	7.0
Vehicle Extension (s)	4.0	4.0	2.0	2.0	2.0	2.0	2.0	3.0	2.0	2.0	3.0	4.0
Lane Grp Cap (vph)	307	925	576	162	775	741	110	1635	648	718	2382	947
v/s Ratio Prot	c0.03	c0.15	0.00	0.00	0.10	c0.13	0.01	c0.19	0.00	c0.14	0.18	0.00
v/s Ratio Perm			0.00			0.16			0.00			0.02
v/c Ratio	0.35	0.56	0.00	0.06	0.47	0.61	0.11	0.59	0.01	0.66	0.37	0.04
Uniform Delay, d1	42.6	31.8	22.8	45.3	33.8	22.0	44.0	28.2	19.9	36.1	17.1	10.0
Progression Factor	1.00	1.00	1.00	1.00	1.00	1.00	1.00	1.00	1.00	1.00	1.00	1.00
Incremental Delay, d2	0.9	0.9	0.0	0.1	0.2	1.1	0.2	0.5	0.0	1.8	0.1	0.0
Delay (s)	43.5	32.7	22.8	45.3	34.0	23.1	44.2	28.7	19.9	37.9	17.2	10.0
Level of Service	D	C	C	D	C	C	D	C	B	D	B	A
Approach Delay (s)		34.5			27.9			28.8			23.6	
Approach LOS		C			C			C			C	

Intersection Summary

HCM Average Control Delay	27.6	HCM Level of Service	C
HCM Volume to Capacity ratio	0.61		
Actuated Cycle Length (s)	99.5	Sum of lost time (s)	16.0
Intersection Capacity Utilization	60.7%	ICU Level of Service	B
Analysis Period (min)	15		

c Critical Lane Group

HCM Signalized Intersection Capacity Analysis
21: Waxpool Road & Pacific Blvd

Kincora
Total Future 2030

Movement	EBL	EBT	EBR	WBL	WBT	WBR	NBL	NBT	NBR	SBL	SBT	SBR
Lane Configurations												
Ideal Flow (vphpl)	1900	1900	1900	1900	1900	1900	1900	1900	1900	1900	1900	1900
Total Lost time (s)	3.0	3.0	3.0	3.0	3.0	3.0	3.0	3.0	3.0	3.0	3.0	3.0
Lane Util. Factor	0.94	0.86	1.00	0.97	0.86	1.00	0.97	0.95	1.00	0.97	0.95	1.00
Frt	1.00	1.00	0.85	1.00	1.00	0.85	1.00	1.00	0.85	1.00	1.00	0.85
Flt Protected	0.95	1.00	1.00	0.95	1.00	1.00	0.95	1.00	1.00	0.95	1.00	1.00
Satd. Flow (prot)	4990	6408	1583	3433	6408	1583	3433	3539	1583	3433	3539	1583
Flt Permitted	0.95	1.00	1.00	0.95	1.00	1.00	0.95	1.00	1.00	0.95	1.00	1.00
Satd. Flow (perm)	4990	6408	1583	3433	6408	1583	3433	3539	1583	3433	3539	1583
Volume (vph)	1178	1707	168	25	1338	863	189	183	30	750	116	1155
Peak-hour factor, PHF	0.95	0.95	0.95	0.95	0.95	0.95	0.95	0.95	0.95	0.95	0.95	0.95
Adj. Flow (vph)	1240	1797	177	26	1408	908	199	193	32	789	122	1216
RTOR Reduction (vph)	0	0	0	0	0	0	0	0	0	0	0	0
Lane Group Flow (vph)	1240	1797	177	26	1408	908	199	193	32	789	122	1216
Turn Type	Prot		Free	Prot		Free	Prot		Free	Prot		Free
Protected Phases	1	6		5	2		7	4		3	8	
Permitted Phases			Free			Free			Free			Free
Actuated Green, G (s)	29.0	56.7	120.0	3.3	31.0	120.0	8.0	5.1	120.0	26.9	24.0	120.0
Effective Green, g (s)	33.0	60.7	120.0	7.3	35.0	120.0	12.0	9.1	120.0	30.9	28.0	120.0
Actuated g/C Ratio	0.28	0.51	1.00	0.06	0.29	1.00	0.10	0.08	1.00	0.26	0.23	1.00
Clearance Time (s)	7.0	7.0		7.0	7.0		7.0	7.0		7.0	7.0	
Vehicle Extension (s)	2.0	3.0		2.0	3.0		3.0	3.0		3.0	3.0	
Lane Grp Cap (vph)	1372	3241	1583	209	1869	1583	343	268	1583	884	826	1583
v/s Ratio Prot	c0.25	0.28		0.01	0.22		0.06	0.05		c0.23	0.03	
v/s Ratio Perm			0.11			0.57			0.02			c0.77
v/c Ratio	0.90	0.55	0.11	0.12	0.75	0.57	0.58	0.72	0.02	0.89	0.15	0.77
Uniform Delay, d1	42.0	20.4	0.0	53.3	38.6	0.0	51.6	54.2	0.0	42.9	36.5	0.0
Progression Factor	1.00	1.00	1.00	1.00	1.00	1.00	1.00	1.00	1.00	1.00	1.00	1.00
Incremental Delay, d2	8.5	0.7	0.1	0.1	2.9	1.5	2.5	9.2	0.0	11.3	0.1	3.6
Delay (s)	50.4	21.1	0.1	53.4	41.4	1.5	54.1	63.4	0.0	54.2	36.6	3.6
Level of Service	D	C	A	D	D	A	D	E	A	D	D	A
Approach Delay (s)		31.2			26.1			54.2			24.3	
Approach LOS		C			C			D			C	

Intersection Summary

HCM Average Control Delay	29.1	HCM Level of Service	C
HCM Volume to Capacity ratio	0.81		
Actuated Cycle Length (s)	120.0	Sum of lost time (s)	0.0
Intersection Capacity Utilization	81.6%	ICU Level of Service	D
Analysis Period (min)	15		

c Critical Lane Group

HCM Signalized Intersection Capacity Analysis
26: Gloucester Pkwy & Pacific Blvd

Kincora
Total Future 2030

Movement	EBL	EBT	EBR	WBL	WBT	WBR	NBL	NBT	NBR	SBL	SBT	SBR
Lane Configurations												
Ideal Flow (vphpl)	1900	1900	1900	1900	1900	1900	1900	1900	1900	1900	1900	1900
Total Lost time (s)	4.0	4.0		4.0	4.0	4.0		4.0	4.0	4.0	4.0	4.0
Lane Util. Factor	0.97	0.91		0.97	0.95	1.00		0.95	1.00	0.97	0.95	1.00
Frt	1.00	1.00		1.00	1.00	0.85		1.00	0.85	1.00	1.00	0.85
Flt Protected	0.95	1.00		0.95	1.00	1.00		1.00	1.00	0.95	1.00	1.00
Satd. Flow (prot)	3433	5085		3433	3539	1583		3539	1583	3433	3539	1583
Flt Permitted	0.95	1.00		0.95	1.00	1.00		1.00	1.00	0.95	1.00	1.00
Satd. Flow (perm)	3433	5085		3433	3539	1583		3539	1583	3433	3539	1583
Volume (vph)	517	694	0	98	446	799	0	817	180	561	590	339
Peak-hour factor, PHF	0.95	0.95	0.95	0.95	0.95	0.95	0.95	0.95	0.95	0.95	0.95	0.95
Adj. Flow (vph)	544	731	0	103	469	841	0	860	189	591	621	357
RTOR Reduction (vph)	0	0	0	0	0	0	0	0	0	0	0	61
Lane Group Flow (vph)	544	731	0	103	469	841	0	860	189	591	621	296
Turn Type	Prot			Prot		Free	Prot		Free	Prot		pm+ov
Protected Phases	7	4		3	8		5	2		1	6	7
Permitted Phases						Free			Free			6
Actuated Green, G (s)	21.4	32.7		7.5	18.8	119.3		31.1	119.3	22.0	60.1	81.5
Effective Green, g (s)	22.4	33.7		10.5	21.8	119.3		34.1	119.3	25.0	63.1	85.5
Actuated g/C Ratio	0.19	0.28		0.09	0.18	1.00		0.29	1.00	0.21	0.53	0.72
Clearance Time (s)	5.0	5.0		7.0	7.0			7.0		7.0	7.0	5.0
Vehicle Extension (s)	2.0	2.0		2.0	2.0			2.0		2.0	2.0	2.0
Lane Grp Cap (vph)	645	1436		302	647	1583		1012	1583	719	1872	1188
v/s Ratio Prot	c0.16	0.14		0.03	c0.13			c0.24		c0.17	0.18	0.05
v/s Ratio Perm						0.53			0.12			0.14
v/c Ratio	0.84	0.51		0.34	0.72	0.53		0.85	0.12	0.82	0.33	0.25
Uniform Delay, d1	46.8	35.9		51.1	45.9	0.0		40.2	0.0	45.0	16.1	5.8
Progression Factor	1.00	1.00		1.00	1.00	1.00		1.00	1.00	1.00	1.00	1.00
Incremental Delay, d2	9.4	0.1		0.2	3.4	1.3		6.5	0.2	7.2	0.0	0.0
Delay (s)	56.2	36.0		51.4	49.3	1.3		46.7	0.2	52.2	16.1	5.9
Level of Service	E	D		D	D	A		D	A	D	B	A
Approach Delay (s)		44.6			20.9			38.3			27.4	
Approach LOS		D			C			D			C	

Intersection Summary			
HCM Average Control Delay	31.9	HCM Level of Service	C
HCM Volume to Capacity ratio	0.82		
Actuated Cycle Length (s)	119.3	Sum of lost time (s)	16.0
Intersection Capacity Utilization	79.0%	ICU Level of Service	D
Analysis Period (min)	15		

c Critical Lane Group

HCM Unsignalized Intersection Capacity Analysis
27: Site Drive #9 & Pacific Blvd

Kincora
Total Future 2030

Movement	WBL	WBR	NBT	NBR	SBL	SBT
Lane Configurations						
Sign Control	Stop		Free			Free
Grade	0%		0%			0%
Volume (veh/h)	0	95	832	217	0	688
Peak Hour Factor	0.95	0.95	0.95	0.95	0.95	0.95
Hourly flow rate (vph)	0	100	876	228	0	724
Pedestrians						
Lane Width (ft)						
Walking Speed (ft/s)						
Percent Blockage						
Right turn flare (veh)						
Median type	None					
Median storage veh)						
Upstream signal (ft)			535			850
pX, platoon unblocked	0.92	0.88			0.88	
vC, conflicting volume	1352	552			1104	
vC1, stage 1 conf vol						
vC2, stage 2 conf vol						
vCu, unblocked vol	1031	354			982	
tC, single (s)	6.8	6.9			4.1	
tC, 2 stage (s)						
tF (s)	3.5	3.3			2.2	
p0 queue free %	100	82			100	
cM capacity (veh/h)	211	565			615	

Direction, Lane #	WB 1	WB 2	NB 1	NB 2	SB 1	SB 2
Volume Total	33	67	584	520	241	483
Volume Left	0	0	0	0	0	0
Volume Right	33	67	0	228	0	0
cSH	565	565	1700	1700	615	1700
Volume to Capacity	0.06	0.12	0.34	0.31	0.00	0.28
Queue Length 95th (ft)	5	10	0	0	0	0
Control Delay (s)	11.8	12.2	0.0	0.0	0.0	0.0
Lane LOS	B	B				
Approach Delay (s)	12.1		0.0		0.0	
Approach LOS	B					

Intersection Summary			
Average Delay	0.6		
Intersection Capacity Utilization	40.5%	ICU Level of Service	A
Analysis Period (min)	15		

Movement	WBL	WBR	NBT	NBR	SBL	SBT
Lane Configurations						
Ideal Flow (vphpl)	1900	1900	1900	1900	1900	1900
Total Lost time (s)	4.0		4.0			4.0
Lane Util. Factor	1.00		0.95			0.95
Frt	0.95		0.99			1.00
Flt Protected	0.97		1.00			0.99
Satd. Flow (prot)	1711		3502			3515
Flt Permitted	0.97		1.00			0.73
Satd. Flow (perm)	1711		3502			2598
Volume (vph)	115	77	816	62	94	594
Peak-hour factor, PHF	0.95	0.95	0.95	0.95	0.95	0.95
Adj. Flow (vph)	121	81	859	65	99	625
RTOR Reduction (vph)	15	0	11	0	0	0
Lane Group Flow (vph)	187	0	913	0	0	724
Turn Type					Perm	
Protected Phases	8		2			6
Permitted Phases					6	
Actuated Green, G (s)	12.1		25.3			25.3
Effective Green, g (s)	15.1		28.3			28.3
Actuated g/C Ratio	0.29		0.55			0.55
Clearance Time (s)	7.0		7.0			7.0
Vehicle Extension (s)	2.0		2.0			2.0
Lane Grp Cap (vph)	503		1928			1430
v/s Ratio Prot	c0.11		0.26			
v/s Ratio Perm						c0.23
v/c Ratio	0.37		0.47			0.51
Uniform Delay, d1	14.4		7.0			7.2
Progression Factor	1.00		1.00			1.00
Incremental Delay, d2	0.2		0.1			0.1
Delay (s)	14.6		7.1			7.3
Level of Service	B		A			A
Approach Delay (s)	14.6		7.1			7.3
Approach LOS	B		A			A

Intersection Summary			
HCM Average Control Delay	8.0	HCM Level of Service	A
HCM Volume to Capacity ratio	0.46		
Actuated Cycle Length (s)	51.4	Sum of lost time (s)	8.0
Intersection Capacity Utilization	64.8%	ICU Level of Service	C
Analysis Period (min)	15		

c Critical Lane Group

Movement	WBL	WBR	NBT	NBR	SBL	SBT
Lane Configurations						
Sign Control	Stop		Free			Free
Grade	0%		0%			0%
Volume (veh/h)	0	13	2055	78	0	1489
Peak Hour Factor	0.95	0.95	0.95	0.95	0.95	0.95
Hourly flow rate (vph)	0	14	2163	82	0	1567
Pedestrians						
Lane Width (ft)						
Walking Speed (ft/s)						
Percent Blockage						
Right turn flare (veh)						
Median type	None					
Median storage veh)						
Upstream signal (ft)			844			1270
pX, platoon unblocked	0.82	0.77			0.77	
vC, conflicting volume	2988	1123			2245	
vC1, stage 1 conf vol						
vC2, stage 2 conf vol						
vCu, unblocked vol	2887	862			2318	
tC, single (s)	6.8	6.9			4.1	
tC, 2 stage (s)						
tF (s)	3.5	3.3			2.2	
p0 queue free %	100	94			100	
cM capacity (veh/h)	10	230			163	

Direction, Lane #	WB 1	NB 1	NB 2	SB 1	SB 2
Volume Total	14	1442	803	522	1045
Volume Left	0	0	0	0	0
Volume Right	14	0	82	0	0
cSH	230	1700	1700	163	1700
Volume to Capacity	0.06	0.85	0.47	0.00	0.61
Queue Length 95th (ft)	5	0	0	0	0
Control Delay (s)	21.6	0.0	0.0	0.0	0.0
Lane LOS	C				
Approach Delay (s)	21.6	0.0		0.0	
Approach LOS	C				

Intersection Summary			
Average Delay	0.1		
Intersection Capacity Utilization	69.3%	ICU Level of Service	C
Analysis Period (min)	15		

Movement	WBL	WBR	NBT	NBR	SBL	SBT
Lane Configurations						
Sign Control	Stop		Free			Free
Grade	0%		0%			0%
Volume (veh/h)	0	13	1991	78	0	1489
Peak Hour Factor	0.95	0.95	0.95	0.95	0.95	0.95
Hourly flow rate (vph)	0	14	2096	82	0	1567
Pedestrians						
Lane Width (ft)						
Walking Speed (ft/s)						
Percent Blockage						
Right turn flare (veh)						
Median type	None					
Median storage veh)						
Upstream signal (ft)						670
pX, platoon unblocked	0.86					
vC, conflicting volume	2921	1089			2178	
vC1, stage 1 conf vol						
vC2, stage 2 conf vol						
vCu, unblocked vol	3067	1089			2178	
tC, single (s)	6.8	6.9			4.1	
tC, 2 stage (s)						
tF (s)	3.5	3.3			2.2	
p0 queue free %	100	94			100	
cM capacity (veh/h)	8	211			241	

Direction, Lane #	WB 1	NB 1	NB 2	SB 1	SB 2
Volume Total	14	1397	781	522	1045
Volume Left	0	0	0	0	0
Volume Right	14	0	82	0	0
cSH	211	1700	1700	241	1700
Volume to Capacity	0.06	0.82	0.46	0.00	0.61
Queue Length 95th (ft)	5	0	0	0	0
Control Delay (s)	23.3	0.0	0.0	0.0	0.0
Lane LOS	C				
Approach Delay (s)	23.3	0.0		0.0	
Approach LOS	C				

Intersection Summary			
Average Delay	0.1		
Intersection Capacity Utilization	67.5%	ICU Level of Service	C
Analysis Period (min)	15		

Movement	EBL	EBT	EBR	WBL	WBT	WBR	NBL	NBT	NBR	SBL	SBT	SBR
Lane Configurations												
Ideal Flow (vphpl)	1900	1900	1900	1900	1900	1900	1900	1900	1900	1900	1900	1900
Total Lost time (s)		4.0	4.0		4.0			4.0			4.0	
Lane Util. Factor		0.95	0.95		1.00			0.95			0.91	
Frt		0.85	0.85		0.86			1.00			0.99	
Flt Protected		1.00	1.00		1.00			1.00			1.00	
Satd. Flow (prot)		1504	1504		1611			3531			5029	
Flt Permitted		1.00	1.00		1.00			1.00			1.00	
Satd. Flow (perm)		1504	1504		1611			3531			5029	
Volume (vph)	0	0	133	0	0	13	0	1971	31	0	1356	108
Peak-hour factor, PHF	0.95	0.95	0.95	0.95	0.95	0.95	0.95	0.95	0.95	0.95	0.95	0.95
Adj. Flow (vph)	0	0	140	0	0	14	0	2075	33	0	1427	114
RTOR Reduction (vph)	0	63	63	0	13	0	0	1	0	0	6	0
Lane Group Flow (vph)	0	7	7	0	1	0	0	2107	0	0	1535	0
Turn Type	Perm		Perm	Perm			Perm			Perm		
Protected Phases		4			8			2			6	
Permitted Phases	4		4	8			2			6		
Actuated Green, G (s)		5.7	5.7		5.7			62.0			62.0	
Effective Green, g (s)		8.7	8.7		8.7			65.0			65.0	
Actuated g/C Ratio		0.11	0.11		0.11			0.80			0.80	
Clearance Time (s)		7.0	7.0		7.0			7.0			7.0	
Vehicle Extension (s)		2.0	2.0		2.0			2.0			2.0	
Lane Grp Cap (vph)		160	160		172			2809			4001	
v/s Ratio Prot		c0.00			0.00			c0.60			0.31	
v/s Ratio Perm			0.00									
v/c Ratio		0.05	0.05		0.01			0.75			0.38	
Uniform Delay, d1		32.8	32.8		32.6			4.2			2.5	
Progression Factor		1.00	1.00		1.00			1.00			1.00	
Incremental Delay, d2		0.0	0.0		0.0			1.0			0.0	
Delay (s)		32.8	32.8		32.7			5.3			2.5	
Level of Service		C	C		C			A			A	
Approach Delay (s)		32.8			32.7			5.3			2.5	
Approach LOS		C			C			A			A	

Intersection Summary			
HCM Average Control Delay	5.3	HCM Level of Service	A
HCM Volume to Capacity ratio	0.67		
Actuated Cycle Length (s)	81.7	Sum of lost time (s)	8.0
Intersection Capacity Utilization	66.3%	ICU Level of Service	C
Analysis Period (min)	15		
c Critical Lane Group			

Movement	EBL	EBR	NBL	NBT	SBT	SBR
Lane Configurations						
Ideal Flow (vphpl)	1900	1900	1900	1900	1900	1900
Total Lost time (s)	4.0	4.0		4.0	4.0	
Lane Util. Factor	1.00	0.95		0.95	0.91	
Frt	0.85	0.85		1.00	0.99	
Flt Protected	1.00	1.00		1.00	1.00	
Satd. Flow (prot)	1583	1504		3539	5013	
Flt Permitted	1.00	1.00		1.00	1.00	
Satd. Flow (perm)	1583	1504		3539	5013	
Volume (vph)	0	146	0	1984	1318	139
Peak-hour factor, PHF	0.95	0.95	0.95	0.95	0.95	0.95
Adj. Flow (vph)	0	154	0	2088	1387	146
RTOR Reduction (vph)	69	69	0	0	9	0
Lane Group Flow (vph)	8	8	0	2088	1524	0
Turn Type		Perm	Perm			
Protected Phases	4			2	6	
Permitted Phases		4	2			
Actuated Green, G (s)	5.8	5.8		60.5	60.5	
Effective Green, g (s)	8.8	8.8		63.5	63.5	
Actuated g/C Ratio	0.11	0.11		0.79	0.79	
Clearance Time (s)	7.0	7.0		7.0	7.0	
Vehicle Extension (s)	2.0	2.0		2.0	2.0	
Lane Grp Cap (vph)	173	165		2799	3964	
v/s Ratio Prot	0.01			c0.59	0.30	
v/s Ratio Perm		c0.01				
v/c Ratio	0.05	0.05		0.75	0.38	
Uniform Delay, d1	32.0	32.0		4.3	2.5	
Progression Factor	1.00	1.00		1.00	1.00	
Incremental Delay, d2	0.0	0.0		1.0	0.0	
Delay (s)	32.0	32.1		5.3	2.5	
Level of Service	C	C		A	A	
Approach Delay (s)	32.1			5.3	2.5	
Approach LOS	C			A	A	

Intersection Summary			
HCM Average Control Delay	5.3	HCM Level of Service	A
HCM Volume to Capacity ratio	0.66		
Actuated Cycle Length (s)	80.3	Sum of lost time (s)	8.0
Intersection Capacity Utilization	65.7%	ICU Level of Service	C
Analysis Period (min)	15		

c Critical Lane Group

Movement	EBL	EBR	NBL	NBT	SBT	SBR
Lane Configurations						
Ideal Flow (vphpl)	1900	1900	1900	1900	1900	1900
Total Lost time (s)	4.0	4.0	4.0	4.0	4.0	
Lane Util. Factor	1.00	0.88	1.00	0.95	0.91	
Frt	1.00	0.85	1.00	1.00	0.99	
Flt Protected	0.95	1.00	0.95	1.00	1.00	
Satd. Flow (prot)	1770	2787	1770	3539	5048	
Flt Permitted	0.95	1.00	0.95	1.00	1.00	
Satd. Flow (perm)	1770	2787	1770	3539	5048	
Volume (vph)	70	272	370	1614	1186	62
Peak-hour factor, PHF	0.95	0.95	0.95	0.95	0.95	0.95
Adj. Flow (vph)	74	286	389	1699	1248	65
RTOR Reduction (vph)	0	236	0	0	5	0
Lane Group Flow (vph)	74	50	389	1699	1308	0
Turn Type		Perm	Prot			
Protected Phases	4		5	2	6	
Permitted Phases		4				
Actuated Green, G (s)	10.8	10.8	21.3	54.3	26.0	
Effective Green, g (s)	13.8	13.8	24.3	57.3	29.0	
Actuated g/C Ratio	0.17	0.17	0.31	0.72	0.37	
Clearance Time (s)	7.0	7.0	7.0	7.0	7.0	
Vehicle Extension (s)	2.0	2.0	2.0	2.0	2.0	
Lane Grp Cap (vph)	309	486	544	2564	1851	
v/s Ratio Prot	c0.04		c0.22	c0.48	0.26	
v/s Ratio Perm		0.02				
v/c Ratio	0.24	0.10	0.72	0.66	0.71	
Uniform Delay, d1	28.1	27.4	24.3	5.8	21.4	
Progression Factor	1.00	1.00	1.00	1.00	1.00	
Incremental Delay, d2	0.1	0.0	3.7	0.5	1.0	
Delay (s)	28.3	27.5	28.0	6.3	22.4	
Level of Service	C	C	C	A	C	
Approach Delay (s)	27.6			10.3	22.4	
Approach LOS	C			B	C	

Intersection Summary			
HCM Average Control Delay	16.2	HCM Level of Service	B
HCM Volume to Capacity ratio	0.58		
Actuated Cycle Length (s)	79.1	Sum of lost time (s)	8.0
Intersection Capacity Utilization	63.1%	ICU Level of Service	B
Analysis Period (min)	15		

c Critical Lane Group

Movement	EBL	EBR	NBL	NBT	SBT	SBR
Lane Configurations						
Ideal Flow (vphpl)	1900	1900	1900	1900	1900	1900
Total Lost time (s)	4.0	4.0	4.0	4.0	4.0	
Lane Util. Factor	1.00	0.88	1.00	0.95	0.91	
Frt	1.00	0.85	1.00	1.00	0.97	
Flt Protected	0.95	1.00	0.95	1.00	1.00	
Satd. Flow (prot)	1770	2787	1770	3539	4939	
Flt Permitted	0.95	1.00	0.95	1.00	1.00	
Satd. Flow (perm)	1770	2787	1770	3539	4939	
Volume (vph)	97	323	674	1010	925	220
Peak-hour factor, PHF	0.95	0.95	0.95	0.95	0.95	0.95
Adj. Flow (vph)	102	340	709	1063	974	232
RTOR Reduction (vph)	0	294	0	0	35	0
Lane Group Flow (vph)	102	46	709	1063	1171	0
Turn Type		Perm	Prot			
Protected Phases	4		5	2	6	
Permitted Phases		4				
Actuated Green, G (s)	10.3	10.3	41.1	73.6	25.5	
Effective Green, g (s)	13.3	13.3	44.1	76.6	28.5	
Actuated g/C Ratio	0.14	0.14	0.45	0.78	0.29	
Clearance Time (s)	7.0	7.0	7.0	7.0	7.0	
Vehicle Extension (s)	2.0	2.0	2.0	2.0	2.0	
Lane Grp Cap (vph)	240	379	797	2769	1438	
v/s Ratio Prot	c0.06		c0.40	0.30	c0.24	
v/s Ratio Perm		0.02				
v/c Ratio	0.42	0.12	0.89	0.38	0.81	
Uniform Delay, d1	38.8	37.2	24.7	3.3	32.2	
Progression Factor	1.00	1.00	1.00	1.00	1.00	
Incremental Delay, d2	0.4	0.1	11.6	0.0	3.5	
Delay (s)	39.2	37.2	36.2	3.3	35.7	
Level of Service	D	D	D	A	D	
Approach Delay (s)	37.7			16.5	35.7	
Approach LOS	D			B	D	

Intersection Summary			
HCM Average Control Delay	26.0	HCM Level of Service	C
HCM Volume to Capacity ratio	0.79		
Actuated Cycle Length (s)	97.9	Sum of lost time (s)	12.0
Intersection Capacity Utilization	78.5%	ICU Level of Service	D
Analysis Period (min)	15		

c Critical Lane Group

Movement	EBL	EBR	NBL	NBT	SBT	SBR
Lane Configurations						
Ideal Flow (vphpl)	1900	1900	1900	1900	1900	1900
Total Lost time (s)	4.0	4.0	4.0	4.0	4.0	
Lane Util. Factor	1.00	0.88	0.91	0.91	0.95	
Frt	1.00	0.85	1.00	1.00	0.99	
Flt Protected	0.95	1.00	0.95	0.99	1.00	
Satd. Flow (prot)	1770	2787	1610	3356	3498	
Flt Permitted	0.95	1.00	0.95	0.54	1.00	
Satd. Flow (perm)	1770	2787	1610	1824	3498	
Volume (vph)	76	313	423	684	832	70
Peak-hour factor, PHF	0.95	0.95	0.95	0.95	0.95	0.95
Adj. Flow (vph)	80	329	445	720	876	74
RTOR Reduction (vph)	0	266	0	0	6	0
Lane Group Flow (vph)	80	63	263	902	944	0
Turn Type		Perm	Prot			
Protected Phases	4		5	2	6	
Permitted Phases		4				
Actuated Green, G (s)	11.0	11.0	16.0	48.1	25.1	
Effective Green, g (s)	14.0	14.0	19.0	51.1	28.1	
Actuated g/C Ratio	0.19	0.19	0.26	0.70	0.38	
Clearance Time (s)	7.0	7.0	7.0	7.0	7.0	
Vehicle Extension (s)	2.0	2.0	2.0	2.0	2.0	
Lane Grp Cap (vph)	339	534	418	1673	1345	
v/s Ratio Prot	c0.05		c0.16	0.14	c0.27	
v/s Ratio Perm		0.02		0.24		
v/c Ratio	0.24	0.12	0.63	0.54	0.70	
Uniform Delay, d1	25.0	24.4	23.9	5.3	19.0	
Progression Factor	1.00	1.00	1.00	1.00	1.00	
Incremental Delay, d2	0.1	0.0	2.1	0.2	1.4	
Delay (s)	25.2	24.5	26.1	5.5	20.3	
Level of Service	C	C	C	A	C	
Approach Delay (s)	24.6			10.1	20.3	
Approach LOS	C			B	C	

Intersection Summary			
HCM Average Control Delay	16.3	HCM Level of Service	B
HCM Volume to Capacity ratio	0.57		
Actuated Cycle Length (s)	73.1	Sum of lost time (s)	12.0
Intersection Capacity Utilization	64.4%	ICU Level of Service	C
Analysis Period (min)	15		

c Critical Lane Group

Movement	EBL	EBT	WBT	WBR	SWL	SWR
Lane Configurations		↑↑	↑↑			↱↱
Sign Control		Free	Free		Stop	
Grade		0%	0%		0%	
Volume (veh/h)	0	1427	690	0	0	535
Peak Hour Factor	0.95	0.95	0.95	0.95	0.95	0.95
Hourly flow rate (vph)	0	1502	726	0	0	563
Pedestrians						
Lane Width (ft)						
Walking Speed (ft/s)						
Percent Blockage						
Right turn flare (veh)						
Median type					None	
Median storage veh)						
Upstream signal (ft)		411				
pX, platoon unblocked					0.86	
vC, conflicting volume	726				1477	363
vC1, stage 1 conf vol						
vC2, stage 2 conf vol						
vCu, unblocked vol	726				1391	363
tC, single (s)	4.1				6.8	6.9
tC, 2 stage (s)						
tF (s)	2.2				3.5	3.3
p0 queue free %	100				100	11
cM capacity (veh/h)	873				114	634

Direction, Lane #	EB 1	EB 2	WB 1	WB 2	SW 1	SW 2
Volume Total	751	751	363	363	282	282
Volume Left	0	0	0	0	0	0
Volume Right	0	0	0	0	282	282
cSH	1700	1700	1700	1700	634	634
Volume to Capacity	0.44	0.44	0.21	0.21	0.44	0.44
Queue Length 95th (ft)	0	0	0	0	57	57
Control Delay (s)	0.0	0.0	0.0	0.0	15.1	15.1
Lane LOS					C	C
Approach Delay (s)	0.0		0.0		15.1	
Approach LOS					C	

Intersection Summary				
Average Delay	3.1			
Intersection Capacity Utilization	44.5%	ICU Level of Service		A
Analysis Period (min)	15			

Movement	EBL	EBR	NBL	NBT	SBT	SBR
Lane Configurations	↰	↱↱	↰	↑↑	↑↑	
Ideal Flow (vphpl)	1900	1900	1900	1900	1900	1900
Total Lost time (s)	4.0	4.0	4.0	4.0	4.0	
Lane Util. Factor	1.00	0.88	0.91	0.91	0.95	
Frt	1.00	0.85	1.00	1.00	0.98	
Flt Protected	0.95	1.00	0.95	0.99	1.00	
Satd. Flow (prot)	1770	2787	1610	3349	3463	
Flt Permitted	0.95	1.00	0.95	0.62	1.00	
Satd. Flow (perm)	1770	2787	1610	2089	3463	
Volume (vph)	76	302	311	449	599	100
Peak-hour factor, PHF	0.95	0.95	0.95	0.95	0.95	0.95
Adj. Flow (vph)	80	318	327	473	631	105
RTOR Reduction (vph)	0	245	0	0	11	0
Lane Group Flow (vph)	80	73	175	625	725	0
Turn Type		Perm	Prot			
Protected Phases	4		5	2	6	
Permitted Phases		4				
Actuated Green, G (s)	10.6	10.6	9.1	34.5	18.4	
Effective Green, g (s)	13.6	13.6	12.1	37.5	21.4	
Actuated g/C Ratio	0.23	0.23	0.20	0.63	0.36	
Clearance Time (s)	7.0	7.0	7.0	7.0	7.0	
Vehicle Extension (s)	2.0	2.0	2.0	2.0	2.0	
Lane Grp Cap (vph)	407	641	330	1583	1254	
v/s Ratio Prot	c0.05		c0.11	0.08	c0.21	
v/s Ratio Perm		0.03		0.17		
v/c Ratio	0.20	0.11	0.53	0.39	0.58	
Uniform Delay, d1	18.3	18.0	21.0	5.3	15.2	
Progression Factor	1.00	1.00	1.00	1.00	1.00	
Incremental Delay, d2	0.1	0.0	0.8	0.1	0.4	
Delay (s)	18.4	18.0	21.8	5.3	15.6	
Level of Service	B	B	C	A	B	
Approach Delay (s)	18.1			8.9	15.6	
Approach LOS	B			A	B	

Intersection Summary				
HCM Average Control Delay	13.4	HCM Level of Service		B
HCM Volume to Capacity ratio	0.46			
Actuated Cycle Length (s)	59.1	Sum of lost time (s)		12.0
Intersection Capacity Utilization	52.4%	ICU Level of Service		A
Analysis Period (min)	15			
c Critical Lane Group				

APPENDIX E

WARRANT ANALYSIS RESULTS

Algonkian Parkway and Winding Road Traffic Signal Warrant Analysis (Existing 2008)

(Based on Estimated Average Daily Traffic - See Note 2)

URBAN _____ RURAL X

1. Minimum Vehicular

Urban Rural **Not Satisfied**

Number of lanes for moving traffic on each approach

Major Street	Minor Street	Minimum Required Estimated Average Daily Traffic: Vehicles per day on major Street (total of both approaches)			Vehicles per day on higher-volume minor street (one direction only)		
		Urban	Rural	Actual	Urban	Rural	Actual
1	1	8,000	5,600	0	2,400	1,680	0
2 or more	1	9,600	6,720	14,960	2,400	1,680	1,130
2 or more	2 or more	9,600	6,720	0	3,200	2,240	0
1	2 or more	8,000	5,600	0	3,200	2,240	0

2. Interruption of Continuous Traffic

Urban Rural **Satisfied**

Number of lanes for moving traffic on each approach

Major Street	Minor Street	Vehicles per day on major Street (total of both approaches)			Vehicles per day on higher-volume minor street (one direction only)		
		Urban	Rural	Actual	Urban	Rural	Actual
1	1	12,000	8,400	0	1,200	850	0
2 or more	1	14,400	10,080	14,960	1,200	850	1,130
2 or more	2 or more	14,400	10,080	0	1,600	1,120	0
1	2 or more	12,000	8,400	0	1,600	1,120	0

3. Combination

Urban Rural **Not Satisfied**

Must satisfy 80% of Warrants 1 and 2 | *Must satisfy 80% of Warrants 1 and 2*

Note:

1. Left turn movements from the major street may be included with minor street volumes if a separate signal phase is to be provided for the left-turn movement.
2. To be used only for NEW INTERSECTIONS or other locations where actual traffic volumes cannot be counted.

* Form is based on the sample form found in the Manual on Traffic Signal Design (MTSD) page 20.

Loudoun County Parkway and Russell Branch Parkway Traffic Signal Warrant Analysis (FB 2011)

(Based on Estimated Average Daily Traffic - See Note 2)

URBAN _____ **RURAL** X

1. Minimum Vehicular Urban / Rural **Satisfied**			**Minimum Required Estimated Average Daily Traffic**					
			Vehicles per day on major Street (total of both approaches)			*Vehicles per day on higher-volume minor street (one direction only)*		
Number of lanes for moving traffic on each approach								
Major Street	Minor Street		Urban	Rural	Actual	Urban	Rural	Actual
1	1		8,000	5,600	0	2,400	1,680	0
2 or more	1		9,600	6,720	0	2,400	1,680	0
2 or more	2 or more		9,600	6,720	22,490	3,200	2,240	4,070
1	2 or more		8,000	5,600	0	3,200	2,240	0
2. Interruption of Continuous Traffic Urban / Rural **Satisfied**			*Vehicles per day on major Street (total of both approaches)*			*Vehicles per day on higher-volume minor street (one direction only)*		
Number of lanes for moving traffic on each approach								
Major Street	Minor Street		Urban	Rural	Actual	Urban	Rural	Actual
1	1		12,000	8,400	0	1,200	850	0
2 or more	1		14,400	10,080	0	1,200	850	0
2 or more	2 or more		14,400	10,080	22,490	1,600	1,120	4,070
1	2 or more		12,000	8,400	0	1,600	1,120	0
3. Combination Urban / Rural **Satisfied**			*Must satisfy 80% of Warrants 1 and 2*			*Must satisfy 80% of Warrants 1 and 2*		

Note:

1. Left turn movements from the major street may be included with minor street volumes if a separate signal phase is to be provided for the left-turn movement.
2. To be used only for NEW INTERSECTIONS or other locations where actual traffic volumes cannot be counted.

* Form is based on the sample form found in the Manual on Traffic Signal Design (MTSD) page 20.

Loudoun County Parkway and Smith Switch Road Traffic Signal Warrant Analysis (FB 2011)

(Based on Estimated Average Daily Traffic - See Note 2)

URBAN _____ **RURAL** X

1. Minimum Vehicular

Urban Rural **Not Satisfied**

Minimum Required Estimated Average Daily Traffic

Number of lanes for moving traffic on each approach		*Vehicles per day on major Street (total of both approaches)*			*Vehicles per day on higher-volume minor street (one direction only)*		
Major Street	Minor Street	Urban	Rural	Actual	Urban	Rural	Actual
1	1	8,000	5,600	0	2,400	1,680	0
2 or more	1	9,600	6,720	24,830	2,400	1,680	940
2 or more	2 or more	9,600	6,720	0	3,200	2,240	0
1	2 or more	8,000	5,600	0	3,200	2,240	0

2. Interruption of Continuous Traffic

Urban Rural **Satisfied**

Number of lanes for moving traffic on each approach		*Vehicles per day on major Street (total of both approaches)*			*Vehicles per day on higher-volume minor street (one direction only)*		
Major Street	Minor Street	Urban	Rural	Actual	Urban	Rural	Actual
1	1	12,000	8,400	0	1,200	850	0
2 or more	1	14,400	10,080	24,830	1,200	850	940
2 or more	2 or more	14,400	10,080	0	1,600	1,120	0
1	2 or more	12,000	8,400	0	1,600	1,120	0

3. Combination

Urban Rural **Not Satisfied**

Must satisfy 80% of Warrants 1 and 2 | *Must satisfy 80% of Warrants 1 and 2*

Note:

1. Left turn movements from the major street may be included with minor street volumes if a separate signal phase is to be provided for the left-turn movement.
2. To be used only for NEW INTERSECTIONS or other locations where actual traffic volumes cannot be counted.

* Form is based on the sample form found in the Manual on Traffic Signal Design (MTSD) page 20.

Pacific Boulevard and Future Site Drive #1 Traffic Signal Warrant Analysis (TF 2011)

(Based on Estimated Average Daily Traffic - See Note 2)

URBAN _____ **RURAL** X

1. Minimum Vehicular Urban / Rural **Not Satisfied**	**Minimum Required Estimated Average Daily Traffic**							
	Vehicles per day on major Street (total of both approaches)			*Vehicles per day on higher-volume minor street (one direction only)*		
Number of lanes for moving traffic on each approach								
Major Street / Minor Street	Urban	Rural	Actual	Urban	Rural	Actual		
1 / 1	8,000	5,600	4,070	2,400	1,680	6,110		
2 or more / 1	9,600	6,720	0	2,400	1,680	0		
2 or more / 2 or more	9,600	6,720	0	3,200	2,240	0		
1 / 2 or more	8,000	5,600	0	3,200	2,240	0		
2. Interruption of Continuous Traffic Urban / Rural **Not Satisfied**	*Vehicles per day on major Street (total of both approaches)*			*Vehicles per day on higher-volume minor street (one direction only)*		
Number of lanes for moving traffic on each approach								
Major Street / Minor Street	Urban	Rural	Actual	Urban	Rural	Actual		
1 / 1	12,000	8,400	4,070	1,200	850	6,110		
2 or more / 1	14,400	10,080	0	1,200	850	0		
2 or more / 2 or more	14,400	10,080	0	1,600	1,120	0		
1 / 2 or more	12,000	8,400	0	1,600	1,120	0		
3. Combination Urban / Rural **Not Satisfied**	*Must satisfy 80% of Warrants 1 and 2*			*Must satisfy 80% of Warrants 1 and 2*		

Note:

1. Left turn movements from the major street may be included with minor street volumes if a separate signal phase is to be provided for the left-turn movement.
2. To be used only for NEW INTERSECTIONS or other locations where actual traffic volumes cannot be counted.

* Form is based on the sample form found in the Manual on Traffic Signal Design (MTSD) page 20.

Pacific Boulevard and Future Site Drive #2 Traffic Signal Warrant Analysis (TF 2011)

(Based on Estimated Average Daily Traffic - See Note 2)

URBAN _____ **RURAL** X

1. Minimum Vehicular Urban / Rural **Satisfied**			**Minimum Required Estimated Average Daily Traffic**					
			Vehicles per day on major Street (total of both approaches)			*Vehicles per day on higher-volume minor street (one direction only)*		
Number of lanes for moving traffic on each approach								
Major Street	Minor Street		Urban	Rural	Actual	Urban	Rural	Actual
1	1		8,000	5,600	12,930	2,400	1,680	4,140
2 or more	1		9,600	6,720	0	2,400	1,680	0
2 or more	2 or more		9,600	6,720	0	3,200	2,240	0
1	2 or more		8,000	5,600	0	3,200	2,240	0
2. Interruption of Continuous Traffic Urban / Rural **Satisfied**			*Vehicles per day on major Street (total of both approaches)*			*Vehicles per day on higher-volume minor street (one direction only)*		
Number of lanes for moving traffic on each approach								
Major Street	Minor Street		Urban	Rural	Actual	Urban	Rural	Actual
1	1		12,000	8,400	12,930	1,200	850	4,140
2 or more	1		14,400	10,080	0	1,200	850	0
2 or more	2 or more		14,400	10,080	0	1,600	1,120	0
1	2 or more		12,000	8,400	0	1,600	1,120	0
3. Combination Urban / Rural **Satisfied**			*Must satisfy 80% of Warrants 1 and 2*			*Must satisfy 80% of Warrants 1 and 2*		

Note:

1. Left turn movements from the major street may be included with minor street volumes if a separate signal phase is to be provided for the left-turn movement.
2. To be used only for NEW INTERSECTIONS or other locations where actual traffic volumes cannot be counted.

* Form is based on the sample form found in the Manual on Traffic Signal Design (MTSD) page 20.

Pacific Boulevard and Future Site Drive #3 Traffic Signal Warrant Analysis (TF 2015)

(Based on Estimated Average Daily Traffic - See Note 2)

URBAN _____ **RURAL** X

1. Minimum Vehicular Urban ____ Rural **Satisfied**	**Minimum Required Estimated Average Daily Traffic**							
	Vehicles per day on major Street (total of both approaches)			*Vehicles per day on higher-volume minor street (one direction only)*		
Number of lanes for moving traffic on each approach								
Major Street	Minor Street	Urban	Rural	Actual	Urban	Rural	Actual
1	1	8,000	5,600	9,210	2,400	1,680	4,210
2 or more	1	9,600	6,720	0	2,400	1,680	0
2 or more	2 or more	9,600	6,720	0	3,200	2,240	0
1	2 or more	8,000	5,600	0	3,200	2,240	0
2. Interruption of Continuous Traffic Urban ____ Rural **Satisfied**	*Vehicles per day on major Street (total of both approaches)*			*Vehicles per day on higher-volume minor street (one direction only)*		
Number of lanes for moving traffic on each approach								
Major Street	Minor Street	Urban	Rural	Actual	Urban	Rural	Actual
1	1	12,000	8,400	9,210	1,200	850	4,210
2 or more	1	14,400	10,080	0	1,200	850	0
2 or more	2 or more	14,400	10,080	0	1,600	1,120	0
1	2 or more	12,000	8,400	0	1,600	1,120	0
3. Combination Urban ____ Rural **Satisfied**	*Must satisfy 80% of Warrants 1 and 2*			*Must satisfy 80% of Warrants 1 and 2*		

Note:

1. Left turn movements from the major street may be included with minor street volumes if a separate signal phase is to be provided for the left-turn movement.
2. To be used only for NEW INTERSECTIONS or other locations where actual traffic volumes cannot be counted.

* Form is based on the sample form found in the Manual on Traffic Signal Design (MTSD) page 20.

Pacific Boulevard and Future Site Drive #4 Traffic Signal Warrant Analysis (TF 2015)

(Based on Estimated Average Daily Traffic - See Note 2)

URBAN _____ **RURAL** X

1. Minimum Vehicular Urban ____ Rural **Satisfied**			**Minimum Required Estimated Average Daily Traffic**					
			Vehicles per day on major Street (total of both approaches)			*Vehicles per day on higher-volume minor street (one direction only)*		
Number of lanes for moving traffic on each approach								
Major Street	Minor Street		Urban	Rural	Actual	Urban	Rural	Actual
1	1		8,000	5,600	13,470	2,400	1,680	4,290
2 or more	1		9,600	6,720	0	2,400	1,680	0
2 or more	2 or more		9,600	6,720	0	3,200	2,240	0
1	2 or more		8,000	5,600	0	3,200	2,240	0
2. Interruption of Continuous Traffic Urban ____ Rural **Satisfied**			*Vehicles per day on major Street (total of both approaches)*			*Vehicles per day on higher-volume minor street (one direction only)*		
Number of lanes for moving traffic on each approach								
Major Street	Minor Street		Urban	Rural	Actual	Urban	Rural	Actual
1	1		12,000	8,400	13,470	1,200	850	4,290
2 or more	1		14,400	10,080	0	1,200	850	0
2 or more	2 or more		14,400	10,080	0	1,600	1,120	0
1	2 or more		12,000	8,400	0	1,600	1,120	0
3. Combination Urban ____ Rural **Satisfied**			*Must satisfy 80% of Warrants 1 and 2*			*Must satisfy 80% of Warrants 1 and 2*		

Note:

1. Left turn movements from the major street may be included with minor street volumes if a separate signal phase is to be provided for the left-turn movement.
2. To be used only for NEW INTERSECTIONS or other locations where actual traffic volumes cannot be counted.

* Form is based on the sample form found in the Manual on Traffic Signal Design (MTSD) page 20.

Pacific Boulevard and Future Site Drive #10 Traffic Signal Warrant Analysis (TF 2015)

(Based on Estimated Average Daily Traffic - See Note 2)

URBAN _____ **RURAL** X

1. Minimum Vehicular Urban ____ Rural **Not Satisfied**			**Minimum Required Estimated Average Daily Traffic**					
			Vehicles per day on major Street (total of both approaches)			*Vehicles per day on higher-volume minor street (one direction only)*		
Number of lanes for moving traffic on each approach								
Major Street		Minor Street	Urban	Rural	Actual	Urban	Rural	Actual
1	.....	1	8,000	5,600	18,950	2,400	1,680	1,250
2 or more	.....	1	9,600	6,720	0	2,400	1,680	0
2 or more	.....	2 or more	9,600	6,720	0	3,200	2,240	0
1	.....	2 or more	8,000	5,600	0	3,200	2,240	0
2. Interruption of Continuous Traffic Urban ____ Rural **Satisfied**			*Vehicles per day on major Street (total of both approaches)*			*Vehicles per day on higher-volume minor street (one direction only)*		
Number of lanes for moving traffic on each approach								
Major Street		Minor Street	Urban	Rural	Actual	Urban	Rural	Actual
1	.....	1	12,000	8,400	18,950	1,200	850	1,250
2 or more	.....	1	14,400	10,080	0	1,200	850	0
2 or more	.....	2 or more	14,400	10,080	0	1,600	1,120	0
1	.....	2 or more	12,000	8,400	0	1,600	1,120	0
3. Combination Urban ____ Rural **Not Satisfied**			*Must satisfy 80% of Warrants 1 and 2*			*Must satisfy 80% of Warrants 1 and 2*		

Note:

1. Left turn movements from the major street may be included with minor street volumes if a separate signal phase is to be provided for the left-turn movement.
2. To be used only for NEW INTERSECTIONS or other locations where actual traffic volumes cannot be counted.

* Form is based on the sample form found in the Manual on Traffic Signal Design (MTSD) page 20.

Gloucester Parkway and Pacific Boulevard Traffic Signal Warrant Analysis (TF 2025)

(Based on Estimated Average Daily Traffic - See Note 2)

URBAN _____ **RURAL** X

1. Minimum Vehicular

Urban Rural **Satisfied**

Number of lanes for moving traffic on each approach

Major Street	Minor Street	Minimum Required Estimated Average Daily Traffic: Vehicles per day on major Street (total of both approaches)			Vehicles per day on higher-volume minor street (one direction only)		
		Urban	Rural	Actual	Urban	Rural	Actual
1	1	8,000	5,600	0	2,400	1,680	0
2 or more	1	9,600	6,720	0	2,400	1,680	0
2 or more	2 or more	9,600	6,720	29,770	3,200	2,240	13,540
1	2 or more	8,000	5,600	0	3,200	2,240	0

2. Interruption of Continuous Traffic

Urban Rural **Satisfied**

Number of lanes for moving traffic on each approach

Major Street	Minor Street	Vehicles per day on major Street (total of both approaches)			Vehicles per day on higher-volume minor street (one direction only)		
		Urban	Rural	Actual	Urban	Rural	Actual
1	1	12,000	8,400	0	1,200	850	0
2 or more	1	14,400	10,080	0	1,200	850	0
2 or more	2 or more	14,400	10,080	29,770	1,600	1,120	13,540
1	2 or more	12,000	8,400	0	1,600	1,120	0

3. Combination

Urban Rural **Satisfied**

Must satisfy 80% of Warrants 1 and 2 | *Must satisfy 80% of Warrants 1 and 2*

Note:

1. Left turn movements from the major street may be included with minor street volumes if a separate signal phase is to be provided for the left-turn movement.
2. To be used only for NEW INTERSECTIONS or other locations where actual traffic volumes cannot be counted.

* Form is based on the sample form found in the Manual on Traffic Signal Design (MTSD) page 20.

APPENDIX F

OBSERVED TRIP GENERATION RATES FOR BASEBALL STADIUM

Peak Hour Counts at Pfitzner Baseball Stadium
Collected on Saturday, August 23, 2008

	Inbound	Outbound
5:00 PM - 5:15 PM	48	4
5:15 PM - 5:30 PM	72	3
5:30 PM - 5:45 PM	91	4
5:45 PM - 6:00 PM	101	5
6:00 PM - 6:15 PM	131	4
6:15 PM - 6:30 PM	98	3
Total	**421**	**16**

TRIP GENERATION WORKSHEET FOR BASEBALL STADIUM

Land Use	**Size**	**Units**	**Saturday** *Peak Hour of Generator*		
			In	Out	Total
Pfitzner Baseball Stadium	6,000	Seats	421	16	437
Observed Rates			0.070	0.003	0.073
Kincora Baseball Stadium (Derived)	**5,500**	**Seats**	**386**	**15**	**401**

APPENDIX G

EXISTING REROUTED TRAFFIC DUE TO 2011 AND 2015 PLANNED ROADWAY IMPROVEMENTS

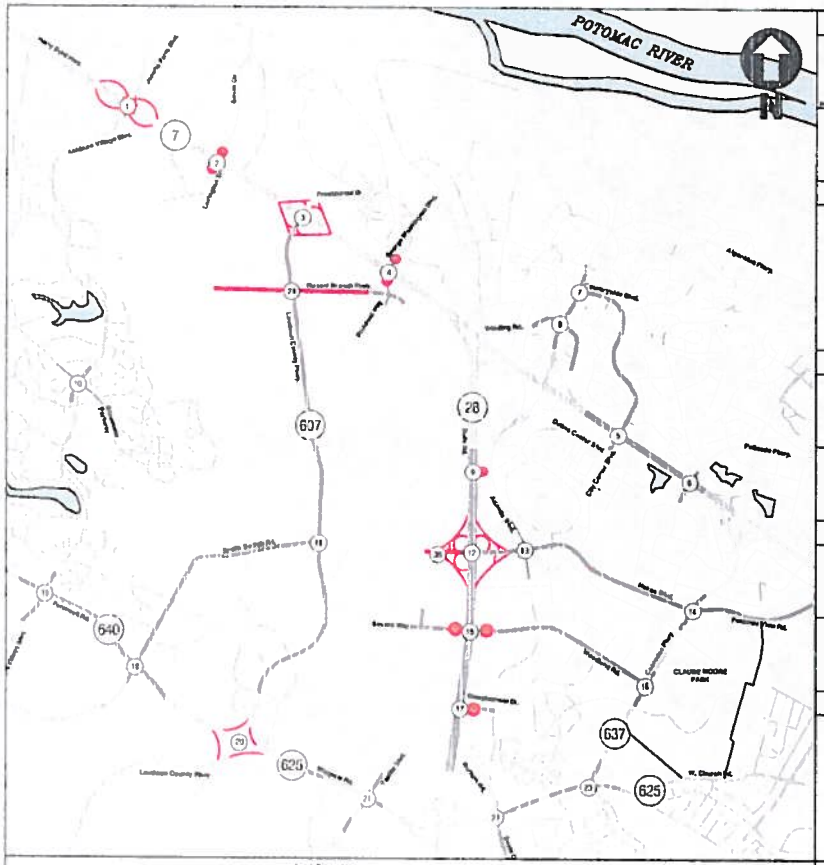

INTERSECTION 1	INTERSECTION 2	INTERSECTION 3	INTERSECTION 4	INTERSECTION 5	INTERSECTION 6
3/10 211/1354 666/317 | 303/310 1555/3512 181/460 | 15/4 2104/2161 116/222 | 136/222 1555/3512 262/278	REMOVE INTERSECTION	106/219 47/453 19/26 | 11/7 1991/3857 83/143 | 142/175 3003/3541 254/90 | 79/206 81/93 262/160	REMOVE INTERSECTION	240/286 24/53 152/186 | 109/214 1218/2218 78/834 | 297/451 2501/3331 53/143 | 63/183 70/146 140/290	29/234 151/225 | 73/161 1122/2304 123/74 | 152/269 2523/1719 361/129 | 68/91 34/97 42/234
INTERSECTION 7	**INTERSECTION 8**	**INTERSECTION 9**	**INTERSECTION 10**	**INTERSECTION 11**	**INTERSECTION 12**
544/529 139/250 | 181/262 52/112 | 300/394 70/117	29/72 876/533 9/29 | 36/30 9/0 71/37 | 41/78 2/2 145/62 | 33/148 2501/1 15/63	REMOVE INTERSECTION	1/66 330/240 180/139 | 137/183 130/188 211/112 | 49/61 250/107 209/239 | 124/332 344/709 225/142	22/13 39/261 | 30/47 28/19 | 13/10 300/8	127/10 1501/1497 470/481 | 237/766 58/22 2/201057 | 6/288 7/43 51/473 | 178/25 1562/3182 1295/903
INTERSECTION 13	**INTERSECTION 14**	**INTERSECTION 15**	**INTERSECTION 16**	**INTERSECTION 17**	**INTERSECTION 18**
70/169 176/206 29/24 | 10/79 217/559 121/223 | 20/329 277/372 465/433 | 37/1125 1552/1 112/287	116/258 646/844 44 | 16/33 113/135 190/238 | 72/329 36/177 79/260 | 161/644 1552/1 220/258	REMOVE INTERSECTION	142/118 729/1116 | 172/249 857/471 | 97/211 54/183	REMOVE INTERSECTION	482/126 1552/1 874/466 | 218/1035 302/1470 103/216 | 129/214 1008/603 252/184 | 62/127 227/540 119/106
INTERSECTION 19	**INTERSECTION 20**	**INTERSECTION 21**	**INTERSECTION 22**	**INTERSECTION 23**	**INTERSECTION 24**
15/20 19/25 84/102 | 82/142 587/2189 224/352 | 34/14 1780/1123 28/24 | 51/13 52/297	62/267 91/267 414/283 | 394/641 853/2788 402/1155 | 53/106 2001/1277 97123 | 70/126 2501/1 1253/837	62/272 53/22 140/304 | 288/337 1888/3059 427/51 | 209/169 2988/2934 172/10 | 7/289 3/43 53/473	147 33 47 | 7/0 1042/865 218/185 | 24/25 912/1495 169/125 | 118/190 372 144/282	522/667 276/303 | 351/729 354/459 | 640/1056 388/473	364/296 0/0 | 0/0 0/0 | 415/548 0/0
INTERSECTION 25	**INTERSECTION 26**	**INTERSECTION 27**	**INTERSECTION 28**	**INTERSECTION 29**	**INTERSECTION 30**
FOR FUTURE USE	FOR FUTURE USE	FOR FUTURE USE	FOR FUTURE USE	FOR FUTURE USE	FOR FUTURE USE
INTERSECTION 31	**INTERSECTION 32**	**INTERSECTION 33**	**INTERSECTION 34**	**INTERSECTION 35**	**INTERSECTION 36**
FOR FUTURE USE	FOR FUTURE USE	FOR FUTURE USE	FOR FUTURE USE	FOR FUTURE USE	127/10 0/0 | 234/47 | 64/1012

LEGEND

Existing Roadway Network (2008)

33,251 Average Daily Traffic Volumes (Calculated)

AM/PM AM/PM AM/PM Peak Hour Traffic Volumes

Appendix G-1
Existing Re-Routed Traffic Volumes due to Planned Roadway Improvements 2011

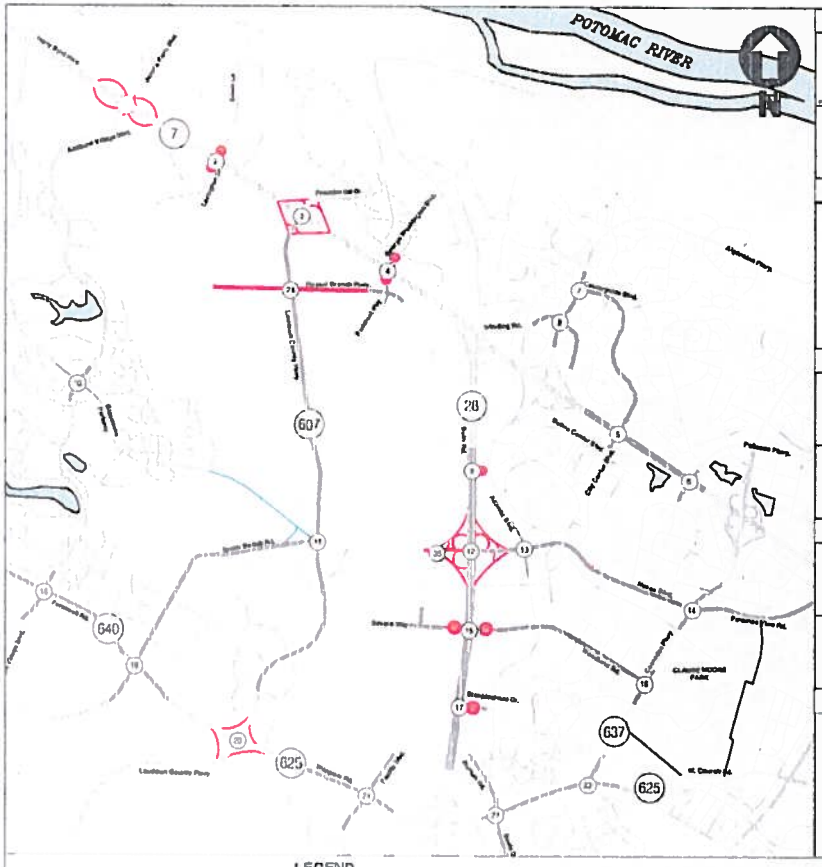

INTERSECTION 1	INTERSECTION 2	INTERSECTION 3	INTERSECTION 4	INTERSECTION 5	INTERSECTION 6
	REMOVE INTERSECTION		REMOVE INTERSECTION		
INTERSECTION 7	**INTERSECTION 8**	**INTERSECTION 9**	**INTERSECTION 10**	**INTERSECTION 11**	**INTERSECTION 12**
		REMOVE INTERSECTION			
INTERSECTION 13	**INTERSECTION 14**	**INTERSECTION 15**	**INTERSECTION 16**	**INTERSECTION 17**	**INTERSECTION 18**
		REMOVE INTERSECTION		REMOVE INTERSECTION	
INTERSECTION 19	**INTERSECTION 20**	**INTERSECTION 21**	**INTERSECTION 22**	**INTERSECTION 23**	**INTERSECTION 24**
INTERSECTION 25	**INTERSECTION 26**	**INTERSECTION 27**	**INTERSECTION 28**	**INTERSECTION 29**	**INTERSECTION 30**
FOR FUTURE USE	FOR FUTURE USE	FOR FUTURE USE	FOR FUTURE USE	FOR FUTURE USE	FOR FUTURE USE
INTERSECTION 31	**INTERSECTION 32**	**INTERSECTION 33**	**INTERSECTION 34**	**INTERSECTION 35**	**INTERSECTION 36**
FOR FUTURE USE	FOR FUTURE USE	FOR FUTURE USE	FOR FUTURE USE	FOR FUTURE USE	

Appendix G-2
Existing Re-Routed Traffic Volumes due to Planned Roadway Improvements 2015

APPENDIX H

OTHER APPROVED 2011 BACKGROUND DEVELOPMENTS (LOCATION MAP AND TRIPS GENERATED)

FUTURE BACKGROUND TRIP GENERATION WORKSHEET

Data collected from the Institute of Transportation Engineers (ITE) Trip Generation, 7th Edition publication.

Interim Build-Out Year = 2011

Future Background Development	ITE Code	Size	Units	Weekday							Saturday			
				AM Peak Hour			PM Peak Hour			Daily	Peak Hour of Generator			Daily
				In	Out	Total	In	Out	Total	Total	In	Out	Total	Total
Ashburn Executive Center														
Office	710	200.0	kSF	288	39	327	52	251	303	2,275	36	29	65	447
Subtotal Ashburn Executive Center				288	39	327	52	251	303	2,275	36	29	65	447
Beaumeade														
Industrial Park	110	100.0	kSF	81	11	92	12	86	98	645	7	7	14	249
Subtotal Beaumeade				81	11	92	12	86	98	645	7	7	14	249
Commonwealth Center														
Office	710	171.0	kSF	253	35	288	46	224	270	2,016	32	26	58	385
Subtotal Commonwealth Center				253	35	288	46	224	270	2,016	32	26	58	385
Lansdowne on the Potomac														
Single Family Attached	230	122	DU	11	50	61	48	23	71	761	43	36	79	870
Multi-Family Attached	220	350	DU	36	140	176	138	73	211	2,254	82	81	163	2,492
Adult/Retirement Housing	252	350	DU	29	35	64	53	34	87	2,767	53	52	105	882
Retail	820	100.0	kSF	96	61	157	301	326	627	6,792	393	361	754	9,240
Subtotal Lansdowne on the Potomac				172	286	458	540	456	996	12,574	571	530	1,101	13,484
Loudoun Pointe														
Industrial Park	110	100.0	kSF	81	11	92	12	86	98	645	7	7	14	249
Subtotal Loudoun Pointe				81	11	92	12	86	98	645	7	7	14	249
Potomac Green														
Elderly Housing - Detached	251	233	DU	44	71	115	98	63	160	2,185	31	32	63	646
Elderly Housing - Attached	253	753	DU	33	21	55	87	68	155	1,961	113	113	226	1,891
Subtotal Potomac Green				77	92	170	185	131	315	4,146	144	145	289	2,537
Ashburn Corporate Center														
Industrial Park	110	100.0	kSF	81	11	92	12	86	98	645	7	7	14	249
Subtotal Ashburn Corporate Center				81	11	92	12	86	98	645	7	7	14	249
University Center														
Office	710	150.0	kSF	228	31	259	42	205	247	1,823	29	23	52	340
Subtotal University Center				228	31	259	42	205	247	1,823	29	23	52	340
Ashburn Village Research Park														
Warehousing	150	102.0	kSF	69	15	84	14	67	81	726	9	4	13	125
Office	710	98.0	kSF	163	22	185	32	157	189	1,313	20	17	37	229
Subtotal Ashburn Village Research Park				232	37	269	46	224	270	2,039	29	21	50	354
Dulles Town Center														
Office	710	209.9	kSF	300	40	340	54	260	314	2,362	37	31	68	468
Business Park	770	86.2	kSF	105	19	124	31	101	132	1,675	18	15	33	204
Hotel	310	100	Rooms	26	15	41	32	27	59	522	42	32	74	668
Elderly Housing	250	158	DU	32	32	64	32	32	64	521	24	24	48	397
Subtotal Dulles Town Center				463	106	569	149	420	569	5,080	121	102	223	1,737
One Loudoun Community														
Office Tower	710	1,120.0	kSF	890	110	1,000	159	742	901	5,143	142	120	262	2,416
Multi-Family/Condo	220	1,118	DU	110	442	552	411	222	633	6,870	239	239	478	8,521
Townhomes	230	734	DU	43	211	254	206	102	308	3,494	139	117	256	3,086
TDM		5%		0	-33	-33	-31	0	-31	518	-19	-18	-37	-581
Internal to Office		15%		-23	-98	-121	-93	-34	-127	-1,286	-57	-54	-111	-1,742
Internal to Retail		15%		-23	-54	-77	-93	-49	-141	-1,555	-57	-54	-111	-1,742
Net Residential Trips				107	468	575	401	241	642	7,005	245	230	475	7,542
Retail	820	408.0	kSF	222	142	364	760	824	1,584	16,938	938	865	1803	22,407
Grocery Store	850	40.0	kSF	78	50	128	231	221	452	4,070	252	241	493	7,104
Convenience Store w/ Gas Pumps	945	12	Pumps	60	60	121	80	80	161	1,953	114	108	222	no data
Internal to Office		15%		-23	-38	-61	-161	-34	-195	-1,286	-196	-183	-378	-4,427
Internal to Residential		15%		-54	23	-77	49	-93	-141	-1,555	-196	-183	378	-4,427
Pass-by		15%		-42	-29	-71	-129	-150	-279	-3,019	-196	-183	-378	-4,427
Net Retail Trips				241	163	403	732	849	1,582	17,102	716	665	1384	16230
Hotel	310	250	Rooms	54	35	89	55	48	103	1,305	100	77	177	2,111
Elementary School	520	875	Students	180	147	327	101	124	225	1,129	0	0	0	0
Subtotal One Loudoun Community				1,472	923	2,394	1,448	2,005	3,453	31,684	1,203	1,092	2,298	28,299
TOTAL FUTURE BACKGROUND TRIPS				3,428	1,582	5,010	2,544	4,174	6,717	63,572	2,186	1,989	4,178	48,330

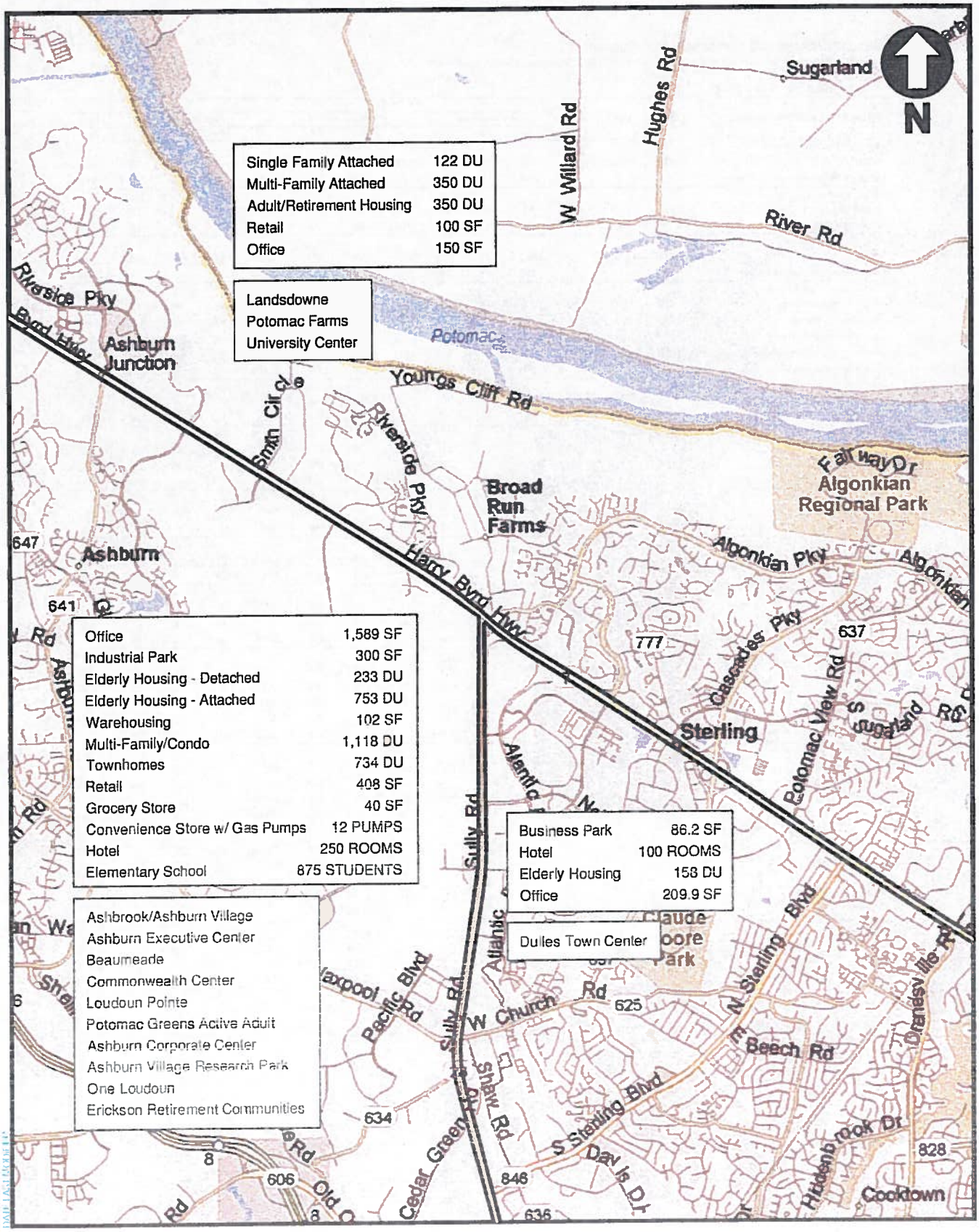

Appendix H
2011 Approved Background Developments

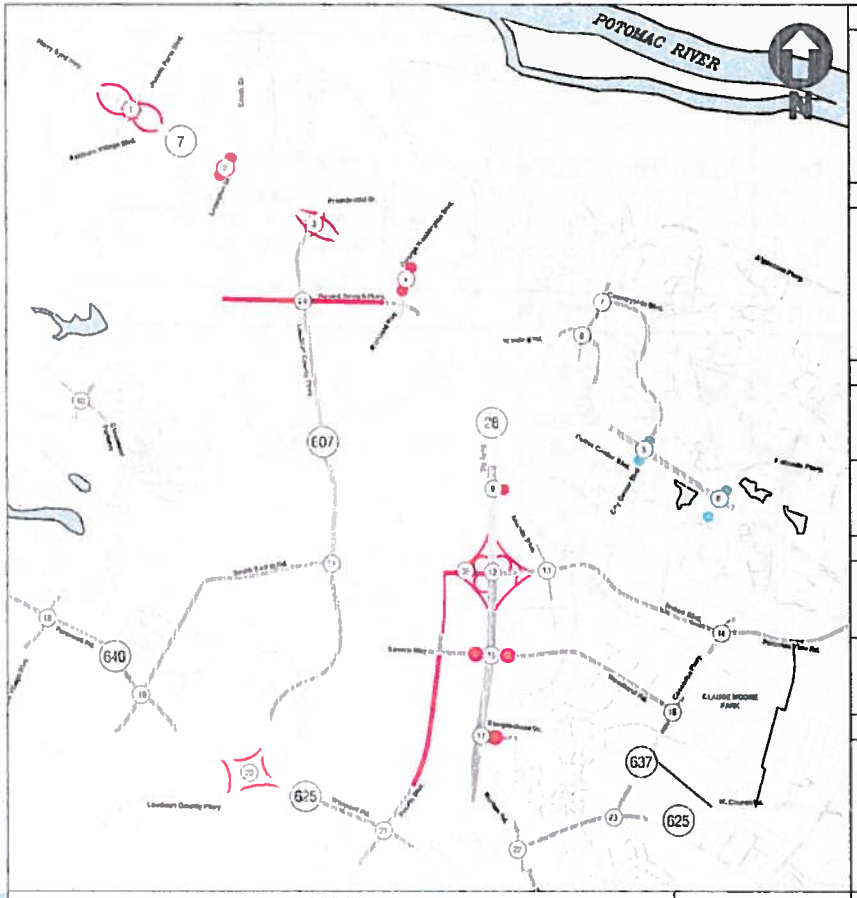

INTERSECTION 1	INTERSECTION 2	INTERSECTION 3	INTERSECTION 4	INTERSECTION 5	INTERSECTION 6
REMOVE INTERSECTION	REMOVE INTERSECTION	REMOVE INTERSECTION	REMOVE INTERSECTION		
INTERSECTION 7	**INTERSECTION 8**	**INTERSECTION 9**	**INTERSECTION 10**	**INTERSECTION 11**	**INTERSECTION 12**
		REMOVE INTERSECTION			
INTERSECTION 13	**INTERSECTION 14**	**INTERSECTION 15**	**INTERSECTION 16**	**INTERSECTION 17**	**INTERSECTION 18**
		REMOVE INTERSECTION		REMOVE INTERSECTION	
INTERSECTION 19	**INTERSECTION 20**	**INTERSECTION 21**	**INTERSECTION 22**	**INTERSECTION 23**	**INTERSECTION 24**
INTERSECTION 25	**INTERSECTION 26**	**INTERSECTION 27**	**INTERSECTION 28**	**INTERSECTION 29**	**INTERSECTION 30**
FOR FUTURE USE	FOR FUTURE USE	FOR FUTURE USE	FOR FUTURE USE	FOR FUTURE USE	FOR FUTURE USE
INTERSECTION 31	**INTERSECTION 32**	**INTERSECTION 33**	**INTERSECTION 34**	**INTERSECTION 35**	**INTERSECTION 36**	**INTERSECTION 37**
FOR FUTURE USE	FOR FUTURE USE	FOR FUTURE USE	FOR FUTURE USE	FOR FUTURE USE		FOR FUTURE USE

LEGEND

- Existing Roadway Network (2003)
- Planned / Recommended Roadway Network (2011)
- Planned / Recommended Improvements Due Background Development (2011)
- AM/PM / AM/PM / AM/PM — Peak Hour Traffic Volumes

Appendix H-1A
Trips Generated by Background Development (2011)
Ashburn Corporate Center (Office)

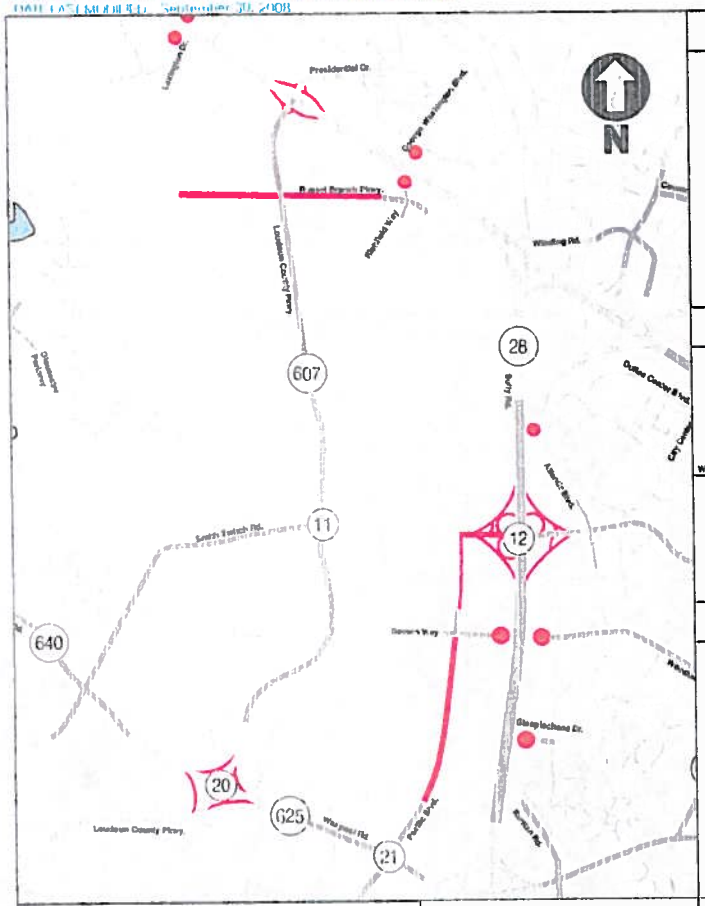

INTERSECTION 3	INTERSECTION 11	INTERSECTION 12	INTERSECTION 20
PLANNED INTERCHANGE	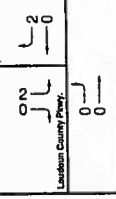		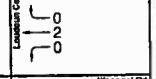

INTERSECTION 21	INTERSECTION 26	INTERSECTION 27	INTERSECTION 28
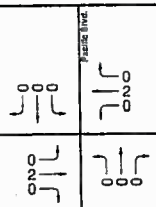	FOR FUTURE USE	FOR FUTURE USE	FOR FUTURE USE

INTERSECTION 29	INTERSECTION 30	INTERSECTION 31	INTERSECTION 32
FOR FUTURE USE	FOR FUTURE USE	FOR FUTURE USE	FOR FUTURE USE

LEGEND	INTERSECTION 33	INTERSECTION 34	INTERSECTION 35	INTERSECTION 36	INTERSECTION 37
Existing Roadway Network (2008) Planned/Recommended Roadway Network (2011) Peak Hour Traffic Volumes	FOR FUTURE USE	FOR FUTURE USE	FOR FUTURE USE	FOR FUTURE USE	FOR FUTURE USE

Appendix H-1B
Trips Generated by Background Development (2011)
Ashburn Corporate Center (Office)

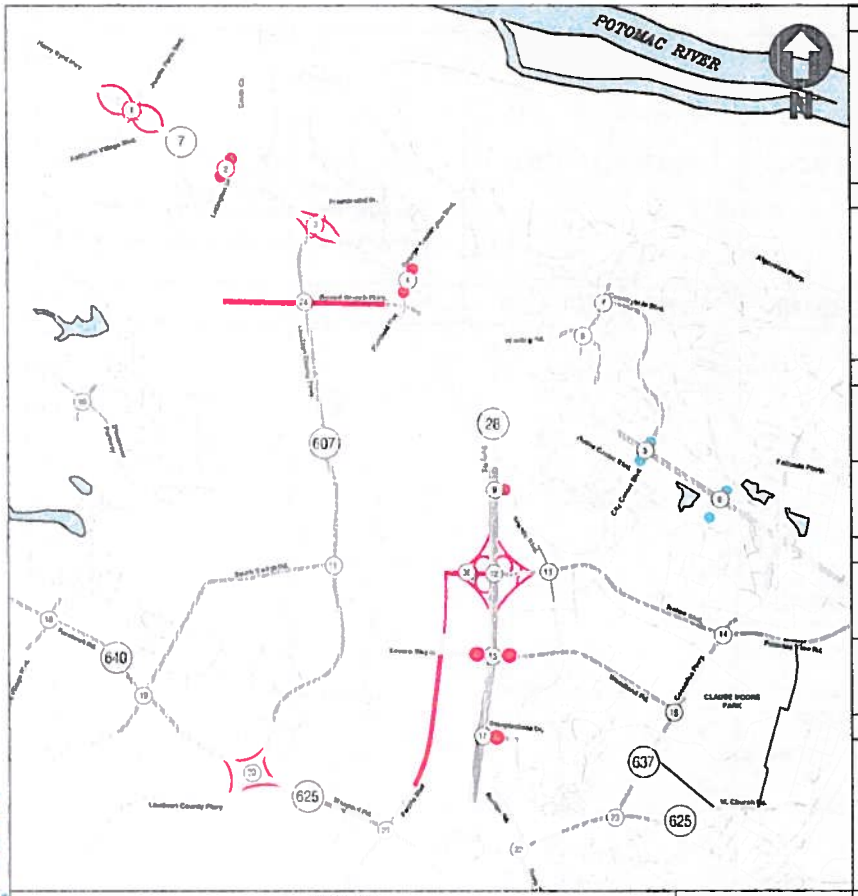

INTERSECTION 1	INTERSECTION 2	INTERSECTION 3	INTERSECTION 4	INTERSECTION 5	INTERSECTION 6
REMOVE INTERSECTION	REMOVE INTERSECTION	REMOVE INTERSECTION	REMOVE INTERSECTION		
INTERSECTION 7	**INTERSECTION 8**	**INTERSECTION 9**	**INTERSECTION 10**	**INTERSECTION 11**	**INTERSECTION 12**
		REMOVE INTERSECTION			
INTERSECTION 13	**INTERSECTION 14**	**INTERSECTION 15**	**INTERSECTION 16**	**INTERSECTION 17**	**INTERSECTION 18**
		REMOVE INTERSECTION		REMOVE INTERSECTION	
INTERSECTION 19	**INTERSECTION 20**	**INTERSECTION 21**	**INTERSECTION 22**	**INTERSECTION 23**	**INTERSECTION 24**
INTERSECTION 25	**INTERSECTION 26**	**INTERSECTION 27**	**INTERSECTION 28**	**INTERSECTION 29**	**INTERSECTION 30**
FOR FUTURE USE	FOR FUTURE USE	FOR FUTURE USE	FOR FUTURE USE	FOR FUTURE USE	FOR FUTURE USE
INTERSECTION 31	**INTERSECTION 32**	**INTERSECTION 33**	**INTERSECTION 34**	**INTERSECTION 35**	**INTERSECTION 36**	**INTERSECTION 37**
FOR FUTURE USE	FOR FUTURE USE	FOR FUTURE USE	FOR FUTURE USE	FOR FUTURE USE		FOR FUTURE USE

LEGEND

- Existing Roadway Network (2003)
- Planned / Recommended Roadway Network (2011)
- Planned / Recommended Improvements Due Background Development (2011)
- AM/PM — AM/PM — AM/PM — Peak Hour Traffic Volumes

Appendix H-2A
Trips Generated by Background Development (2011)
Loudoun Pointe (Office)

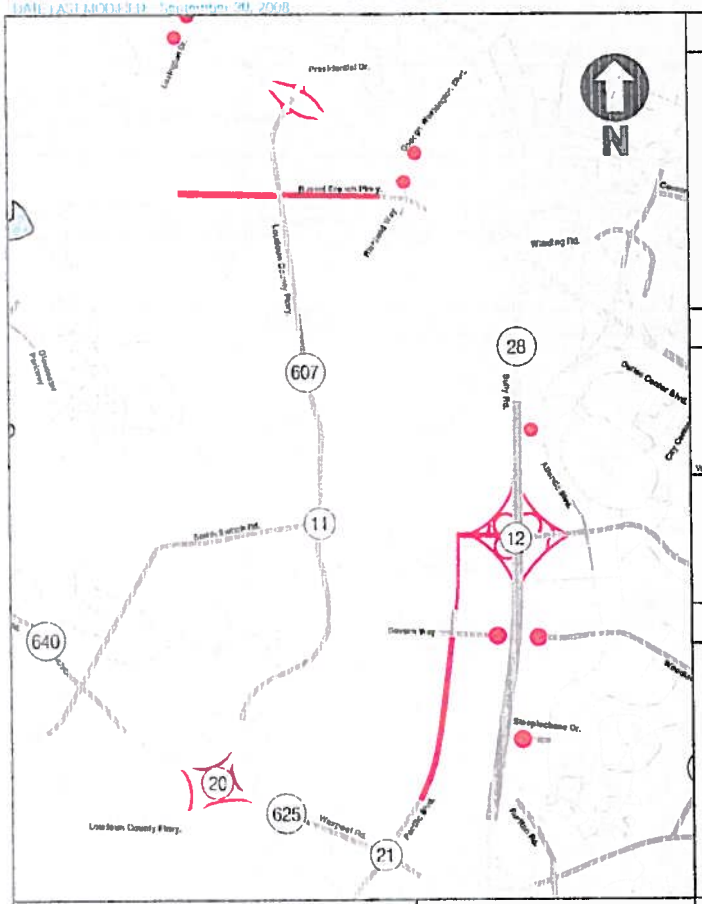

INTERSECTION 3	INTERSECTION 11	INTERSECTION 12	INTERSECTION 20
PLANNED INTERCHANGE	Smith Switch Rd.: 4 / 527; Loudoun County Pkwy.: 9 / 5 / 11 / 591	422 / 526 / 153; 170 / 7 / 784; 177 / 5 / 141; 89 / 1074 / 844	59 / 218 / 406; 474 / 951 / 357; 69 / 1267 / 27; 28 / 226 / 367

INTERSECTION 21	INTERSECTION 26	INTERSECTION 27	INTERSECTION 28
Waxpool Rd.: 827 / 61 / 700; Pacific Blvd.: 851 / 1358 / 20; 949 / 1688 / 40; 48 / 93 / 37	FOR FUTURE USE	FOR FUTURE USE	FOR FUTURE USE

INTERSECTION 29	INTERSECTION 30	INTERSECTION 31	INTERSECTION 32
FOR FUTURE USE	FOR FUTURE USE	FOR FUTURE USE	FOR FUTURE USE

LEGEND	INTERSECTION 33	INTERSECTION 34	INTERSECTION 35	INTERSECTION 36	INTERSECTION 37
Existing Roadway Network (2008) Planned/Recommended Roadway Network (2011) SAT / SAT / SAT Peak Hour Traffic Volumes	FOR FUTURE USE	FOR FUTURE USE	FOR FUTURE USE	FOR FUTURE USE	FOR FUTURE USE

Appendix H-2B
Trips Generated by Background Development (2011)
Loudoun Pointe (Office)

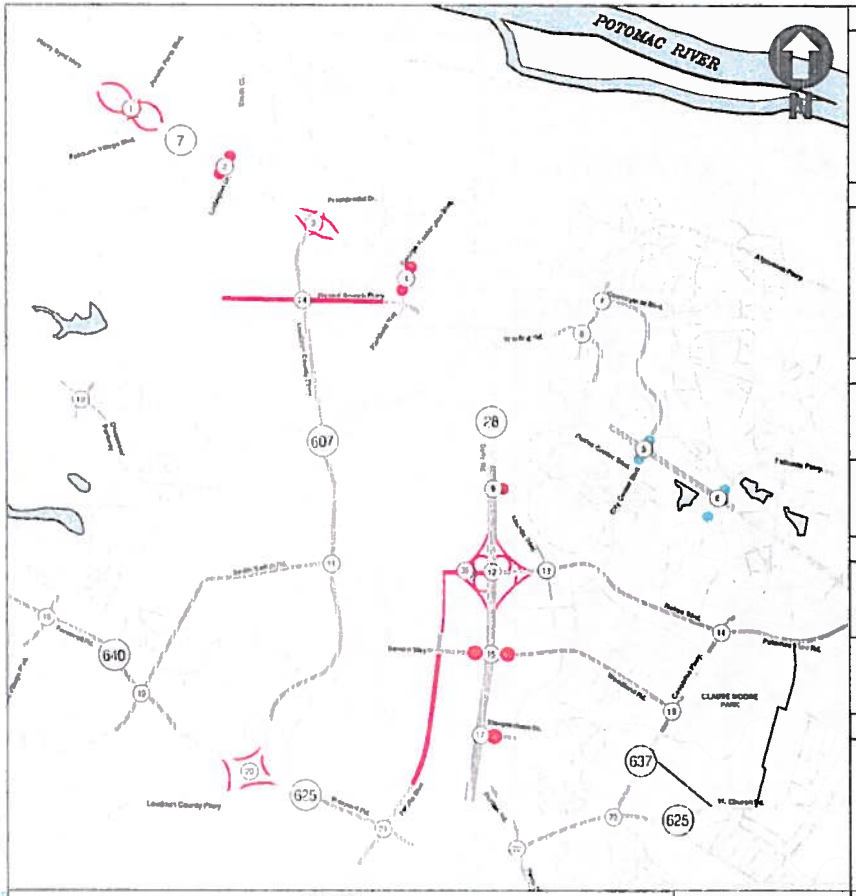

INTERSECTION 1	INTERSECTION 2	INTERSECTION 3	INTERSECTION 4	INTERSECTION 5	INTERSECTION 6
REMOVE INTERSECTION	REMOVE INTERSECTION	REMOVE INTERSECTION	REMOVE INTERSECTION		
INTERSECTION 7	**INTERSECTION 8**	**INTERSECTION 9**	**INTERSECTION 10**	**INTERSECTION 11**	**INTERSECTION 12**
		REMOVE INTERSECTION			
INTERSECTION 13	**INTERSECTION 14**	**INTERSECTION 15**	**INTERSECTION 16**	**INTERSECTION 17**	**INTERSECTION 18**
		REMOVE INTERSECTION		REMOVE INTERSECTION	
INTERSECTION 19	**INTERSECTION 20**	**INTERSECTION 21**	**INTERSECTION 22**	**INTERSECTION 23**	**INTERSECTION 24**
INTERSECTION 25	**INTERSECTION 26**	**INTERSECTION 27**	**INTERSECTION 28**	**INTERSECTION 29**	**INTERSECTION 30**
FOR FUTURE USE	FOR FUTURE USE	FOR FUTURE USE	FOR FUTURE USE	FOR FUTURE USE	FOR FUTURE USE
LEGEND	**INTERSECTION 31**	**INTERSECTION 32**	**INTERSECTION 33**	**INTERSECTION 34**	**INTERSECTION 35**	**INTERSECTION 36**	**INTERSECTION 37**
Existing Roadway Network (2003) Planned / Recommended Roadway Network (2011) Planned / Recommended Improvements Due Background Development (2011) AM/PM AM/PM AM/PM Peak Hour Traffic Volumes	FOR FUTURE USE	FOR FUTURE USE	FOR FUTURE USE	FOR FUTURE USE	FOR FUTURE USE		FOR FUTURE USE

Appendix H-3A
Trips Generated by Background Development (2011)
One Loudoun

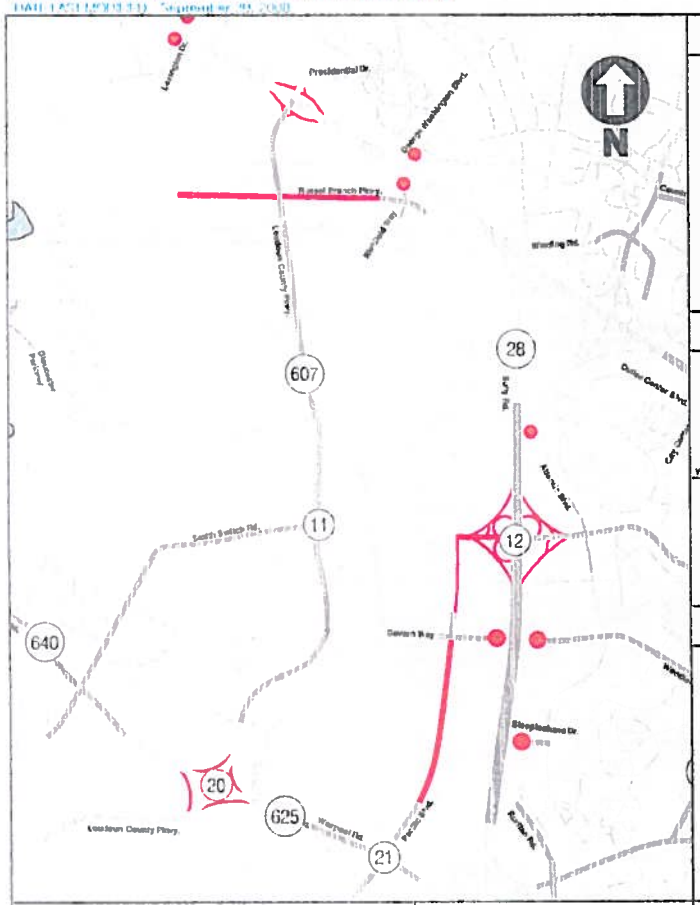

INTERSECTION 3	INTERSECTION 11	INTERSECTION 12	INTERSECTION 20
PLANNED INTERCHANGE	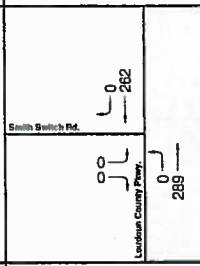	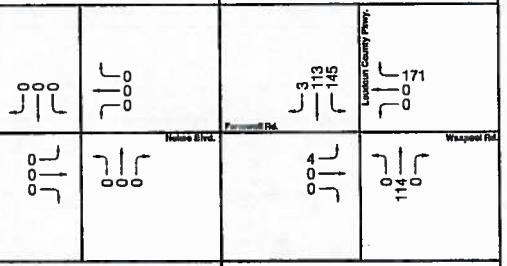	

INTERSECTION 21	INTERSECTION 26	INTERSECTION 27	INTERSECTION 28
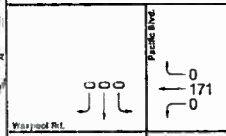	FOR FUTURE USE	FOR FUTURE USE	FOR FUTURE USE

INTERSECTION 29	INTERSECTION 30	INTERSECTION 31	INTERSECTION 32
FOR FUTURE USE	FOR FUTURE USE	FOR FUTURE USE	FOR FUTURE USE

LEGEND	INTERSECTION 33	INTERSECTION 34	INTERSECTION 35	INTERSECTION 36	INTERSECTION 37
Existing Roadway Network (2008) Planned/Recommended Roadway Network (2011) Peak Hour Traffic Volumes	FOR FUTURE USE	FOR FUTURE USE	FOR FUTURE USE	FOR FUTURE USE	FOR FUTURE USE

Appendix H-3B
Trips Generated by Background Development (2011)
One Loudoun

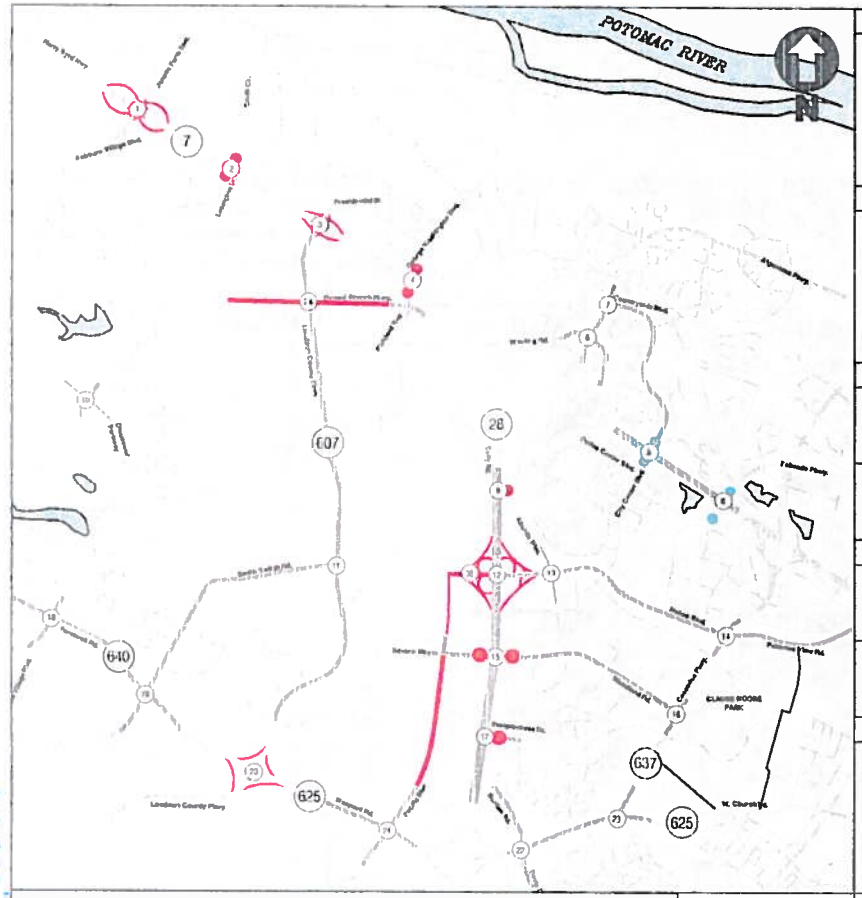

INTERSECTION 1	INTERSECTION 2	INTERSECTION 3	INTERSECTION 4	INTERSECTION 5	INTERSECTION 6
REMOVE INTERSECTION	REMOVE INTERSECTION	REMOVE INTERSECTION	REMOVE INTERSECTION	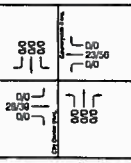	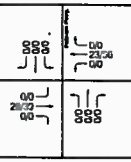
INTERSECTION 7	**INTERSECTION 8**	**INTERSECTION 9**	**INTERSECTION 10**	**INTERSECTION 11**	**INTERSECTION 12**
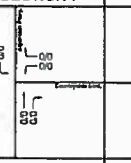	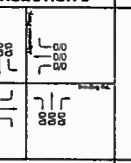	REMOVE INTERSECTION	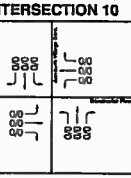	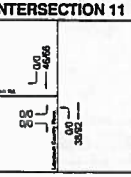	
INTERSECTION 13	**INTERSECTION 14**	**INTERSECTION 15**	**INTERSECTION 16**	**INTERSECTION 17**	**INTERSECTION 18**
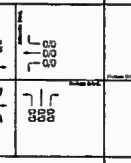	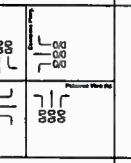	REMOVE INTERSECTION		REMOVE INTERSECTION	
INTERSECTION 19	**INTERSECTION 20**	**INTERSECTION 21**	**INTERSECTION 22**	**INTERSECTION 23**	**INTERSECTION 24**
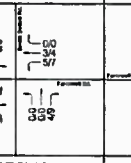		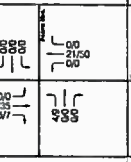		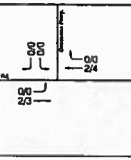	
INTERSECTION 25	**INTERSECTION 26**	**INTERSECTION 27**	**INTERSECTION 28**	**INTERSECTION 29**	**INTERSECTION 30**
FOR FUTURE USE	FOR FUTURE USE	FOR FUTURE USE	FOR FUTURE USE	FOR FUTURE USE	FOR FUTURE USE

LEGEND	INTERSECTION 31	INTERSECTION 32	INTERSECTION 33	INTERSECTION 34	INTERSECTION 35	INTERSECTION 36	INTERSECTION 37
Existing Roadway Network (2003) Planned / Recommended Roadway Network (2011) Planned / Recommended Improvements Due Background Development (2011) AM/PM AM/PM AM/PM Peak Hour Traffic Volumes	FOR FUTURE USE	FOR FUTURE USE	FOR FUTURE USE	FOR FUTURE USE	FOR FUTURE USE	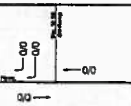	FOR FUTURE USE

Appendix H-4A
Trips Generated by Background Development (2011)
Potomac Green (Residential)

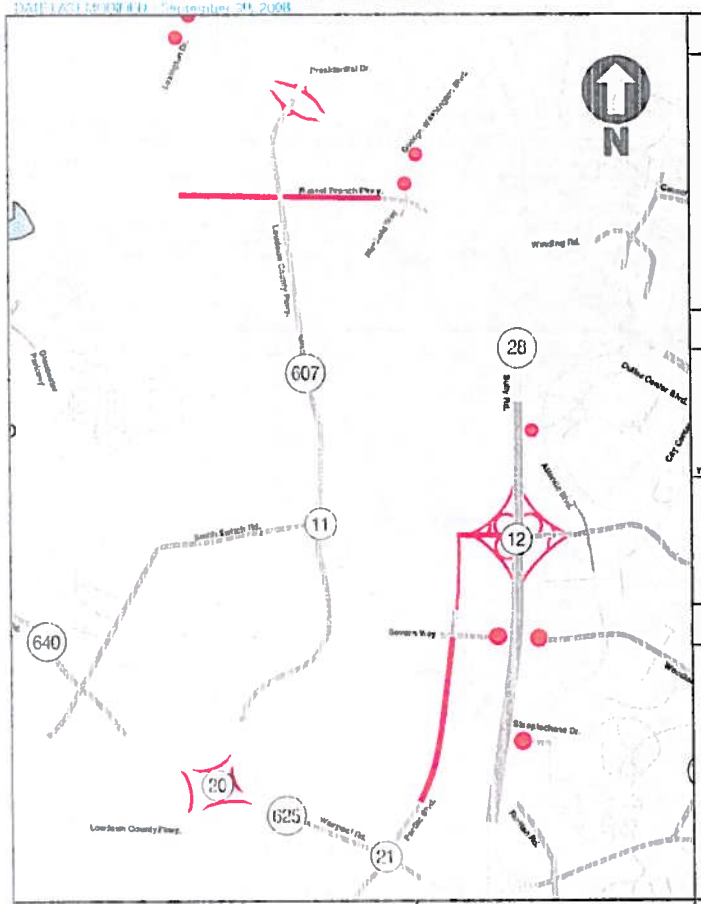

INTERSECTION 3	INTERSECTION 11	INTERSECTION 12	INTERSECTION 20
PLANNED INTERCHANGE	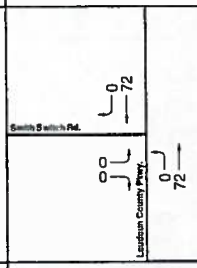	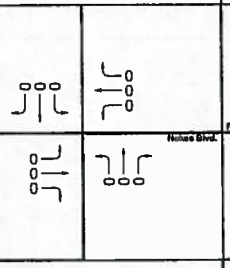	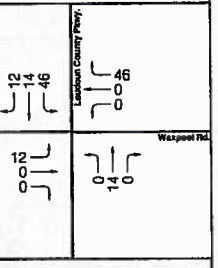

INTERSECTION 21	INTERSECTION 26	INTERSECTION 27	INTERSECTION 28
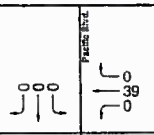	FOR FUTURE USE	FOR FUTURE USE	FOR FUTURE USE

INTERSECTION 29	INTERSECTION 30	INTERSECTION 31	INTERSECTION 32
FOR FUTURE USE	FOR FUTURE USE	FOR FUTURE USE	FOR FUTURE USE

LEGEND	INTERSECTION 33	INTERSECTION 34	INTERSECTION 35	INTERSECTION 36	INTERSECTION 37
Existing Roadway Network (2008) Planned/Recommended Roadway Network (2011) Peak Hour Traffic Volumes	FOR FUTURE USE	FOR FUTURE USE	FOR FUTURE USE	FOR FUTURE USE	FOR FUTURE USE

Appendix H-4B
Trips Generated by Background Development (2011)
Potomac Green (Residential)

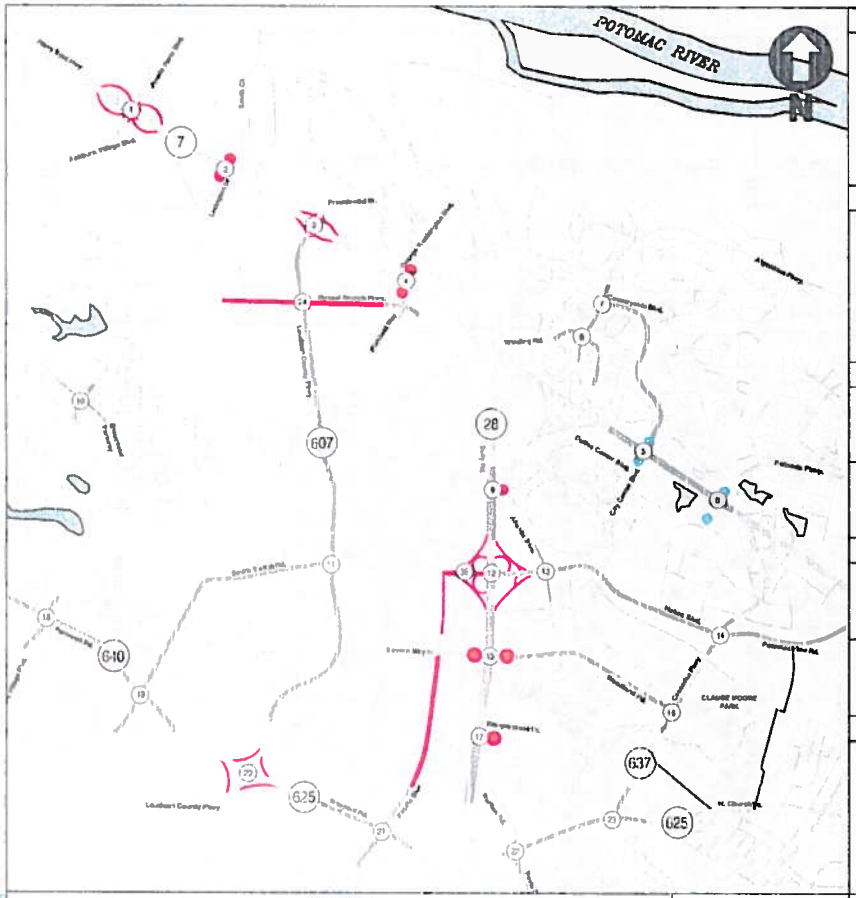

INTERSECTION 1	INTERSECTION 2	INTERSECTION 3	INTERSECTION 4	INTERSECTION 5	INTERSECTION 6
REMOVE INTERSECTION	REMOVE INTERSECTION	REMOVE INTERSECTION	REMOVE INTERSECTION		
INTERSECTION 7	**INTERSECTION 8**	**INTERSECTION 9**	**INTERSECTION 10**	**INTERSECTION 11**	**INTERSECTION 12**
		REMOVE INTERSECTION			
INTERSECTION 13	**INTERSECTION 14**	**INTERSECTION 15**	**INTERSECTION 16**	**INTERSECTION 17**	**INTERSECTION 18**
		REMOVE INTERSECTION		REMOVE INTERSECTION	
INTERSECTION 19	**INTERSECTION 20**	**INTERSECTION 21**	**INTERSECTION 22**	**INTERSECTION 23**	**INTERSECTION 24**
INTERSECTION 25	**INTERSECTION 26**	**INTERSECTION 27**	**INTERSECTION 28**	**INTERSECTION 29**	**INTERSECTION 30**
FOR FUTURE USE	FOR FUTURE USE	FOR FUTURE USE	FOR FUTURE USE	FOR FUTURE USE	FOR FUTURE USE
INTERSECTION 31	**INTERSECTION 32**	**INTERSECTION 33**	**INTERSECTION 34**	**INTERSECTION 35**	**INTERSECTION 36**	**INTERSECTION 37**
FOR FUTURE USE	FOR FUTURE USE	FOR FUTURE USE	FOR FUTURE USE	FOR FUTURE USE		FOR FUTURE USE

LEGEND

- Existing Roadway Network (2008)
- Planned / Recommended Roadway Network (2011)
- Planned / Recommended Improvement; Due Background Development (2011)
- AM/PM / AM/PM — Peak Hour Traffic Volumes

Appendix H-5A
Trips Generated by Background Development (2011)
University Center (Office)

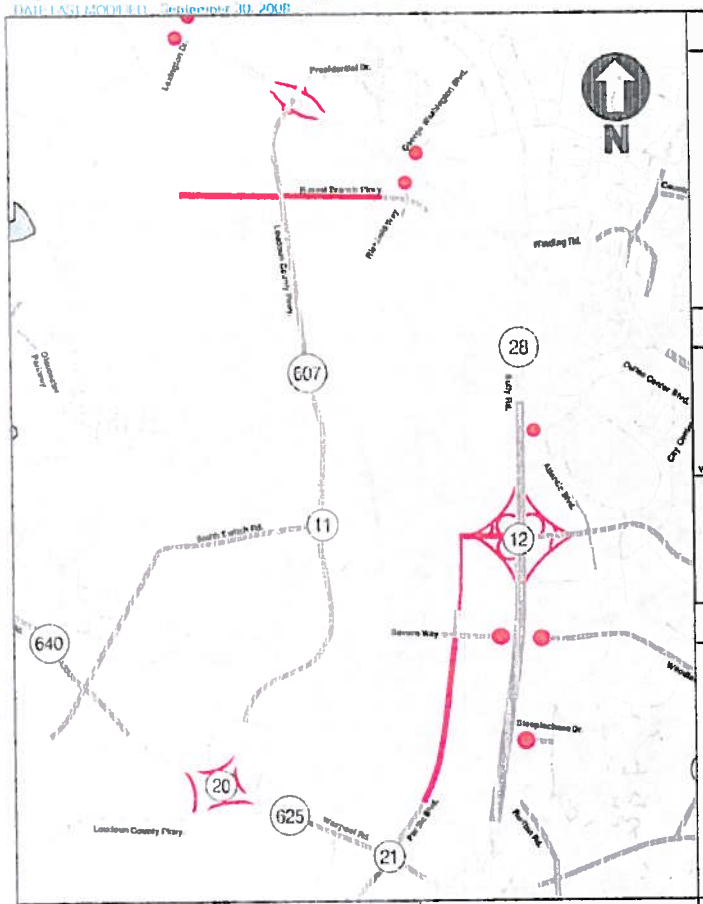

INTERSECTION 3	INTERSECTION 11	INTERSECTION 12	INTERSECTION 20
PLANNED INTERCHANGE	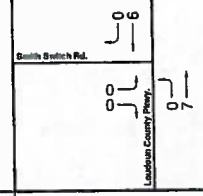	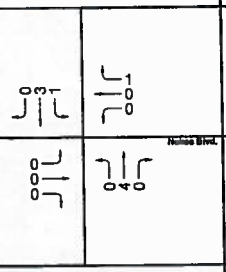	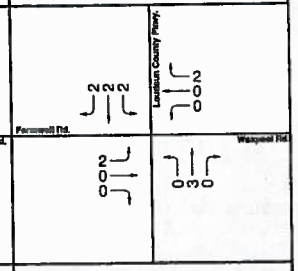

INTERSECTION 21	INTERSECTION 26	INTERSECTION 27	INTERSECTION 28
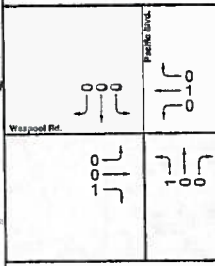	FOR FUTURE USE	FOR FUTURE USE	FOR FUTURE USE

INTERSECTION 29	INTERSECTION 30	INTERSECTION 31	INTERSECTION 32
FOR FUTURE USE	FOR FUTURE USE	FOR FUTURE USE	FOR FUTURE USE

LEGEND	INTERSECTION 33	INTERSECTION 34	INTERSECTION 35	INTERSECTION 36	INTERSECTION 37
Existing Roadway Network (2008) Planned/Recommended Roadway Network (2011) Peak Hour Traffic Volumes	FOR FUTURE USE	FOR FUTURE USE	FOR FUTURE USE	FOR FUTURE USE	FOR FUTURE USE

Appendix H-5B
Trips Generated by Background Development (2011)
University Center (Office)

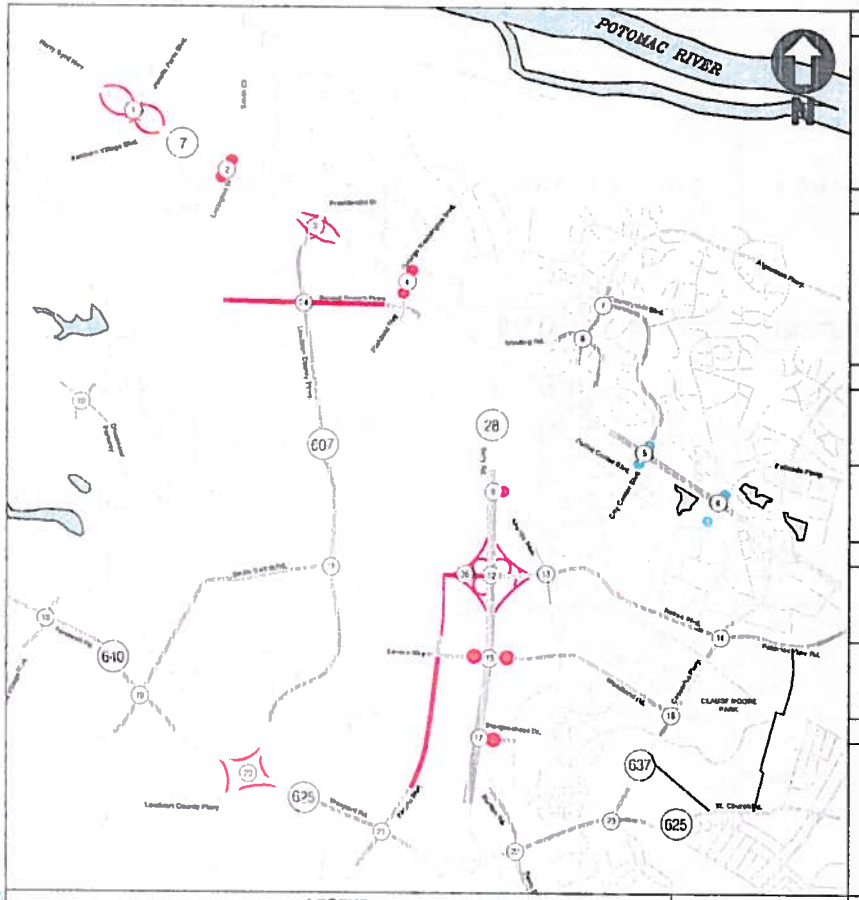

INTERSECTION 1	INTERSECTION 2	INTERSECTION 3	INTERSECTION 4	INTERSECTION 5	INTERSECTION 6
REMOVE INTERSECTION	REMOVE INTERSECTION	REMOVE INTERSECTION	REMOVE INTERSECTION		
INTERSECTION 7	**INTERSECTION 8**	**INTERSECTION 9**	**INTERSECTION 10**	**INTERSECTION 11**	**INTERSECTION 12**
		REMOVE INTERSECTION			
INTERSECTION 13	**INTERSECTION 14**	**INTERSECTION 15**	**INTERSECTION 16**	**INTERSECTION 17**	**INTERSECTION 18**
		REMOVE INTERSECTION		REMOVE INTERSECTION	
INTERSECTION 19	**INTERSECTION 20**	**INTERSECTION 21**	**INTERSECTION 22**	**INTERSECTION 23**	**INTERSECTION 24**
INTERSECTION 25	**INTERSECTION 26**	**INTERSECTION 27**	**INTERSECTION 28**	**INTERSECTION 29**	**INTERSECTION 30**
FOR FUTURE USE	FOR FUTURE USE	FOR FUTURE USE	FOR FUTURE USE	FOR FUTURE USE	FOR FUTURE USE
INTERSECTION 31	**INTERSECTION 32**	**INTERSECTION 33**	**INTERSECTION 34**	**INTERSECTION 35**	**INTERSECTION 36**	**INTERSECTION 37**
FOR FUTURE USE	FOR FUTURE USE	FOR FUTURE USE	FOR FUTURE USE	FOR FUTURE USE		FOR FUTURE USE

LEGEND

- Existing Roadway Network (2008)
- Planned / Recommended Roadway Network (2011)
- Planned / Recommended Improvements Due Background Development (2011)
- AM/PM / AM/PM / AM/PM — Peak Hour Traffic Volumes

Appendix H-GA
Trips Generated by Background Development (2011)
Beaumeade (Office)

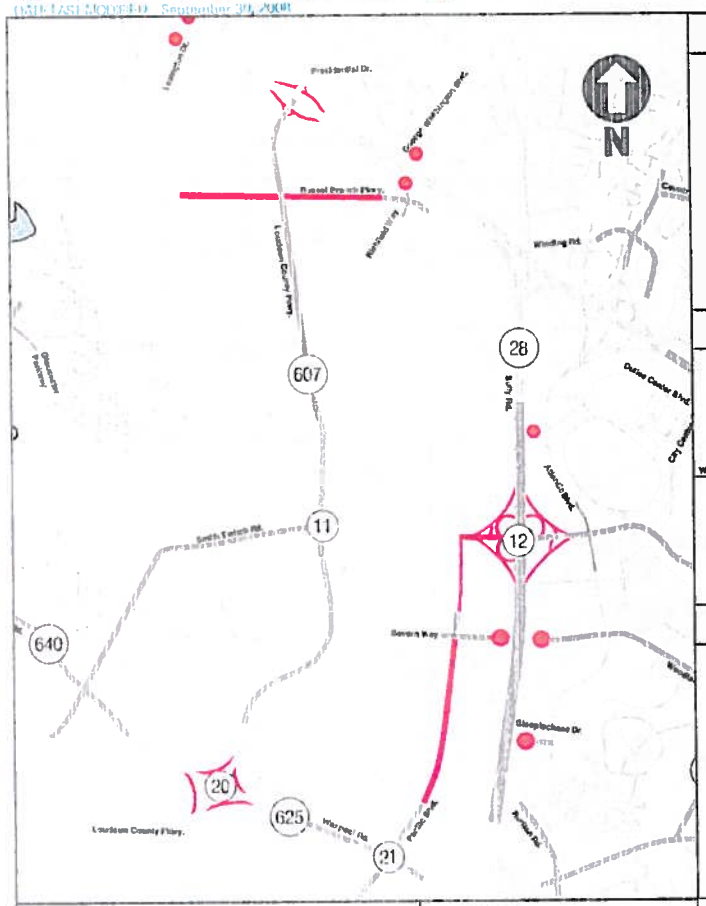

INTERSECTION 3	INTERSECTION 11	INTERSECTION 12	INTERSECTION 20
PLANNED INTERCHANGE		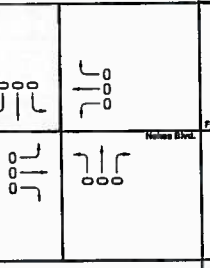	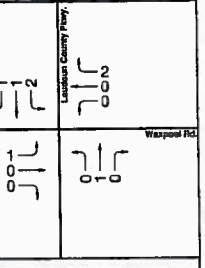

INTERSECTION 21	INTERSECTION 26	INTERSECTION 27	INTERSECTION 28
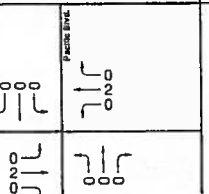	FOR FUTURE USE	FOR FUTURE USE	FOR FUTURE USE

INTERSECTION 29	INTERSECTION 30	INTERSECTION 31	INTERSECTION 32
FOR FUTURE USE	FOR FUTURE USE	FOR FUTURE USE	FOR FUTURE USE

LEGEND	INTERSECTION 33	INTERSECTION 34	INTERSECTION 35	INTERSECTION 36	INTERSECTION 37
Existing Roadway Network (2008) Planned/Recommended Roadway Network (2011) Peak Hour Traffic Volumes	FOR FUTURE USE	FOR FUTURE USE	FOR FUTURE USE	FOR FUTURE USE	FOR FUTURE USE

Appendix H-6B
Trips Generated by Background Development (2011)
Beaumeade (Office)

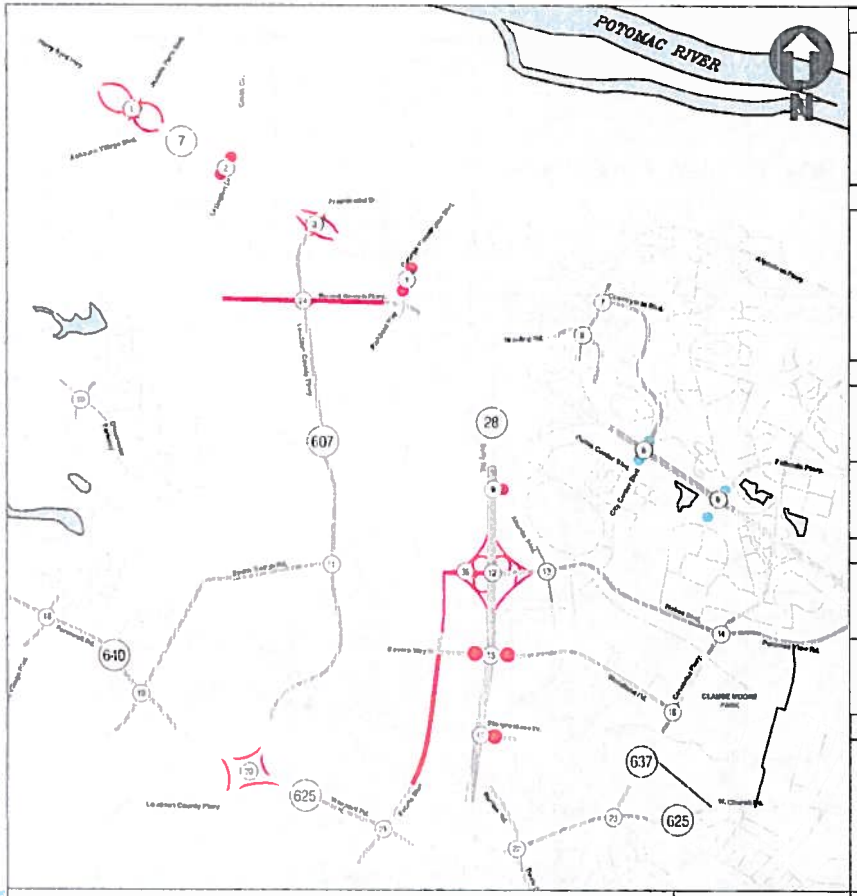

INTERSECTION 1	INTERSECTION 2	INTERSECTION 3	INTERSECTION 4	INTERSECTION 5	INTERSECTION 6
REMOVE INTERSECTION	REMOVE INTERSECTION	REMOVE INTERSECTION	REMOVE INTERSECTION		
INTERSECTION 7	**INTERSECTION 8**	**INTERSECTION 9**	**INTERSECTION 10**	**INTERSECTION 11**	**INTERSECTION 12**
		REMOVE INTERSECTION			
INTERSECTION 13	**INTERSECTION 14**	**INTERSECTION 15**	**INTERSECTION 16**	**INTERSECTION 17**	**INTERSECTION 18**
		REMOVE INTERSECTION		REMOVE INTERSECTION	
INTERSECTION 19	**INTERSECTION 20**	**INTERSECTION 21**	**INTERSECTION 22**	**INTERSECTION 23**	**INTERSECTION 24**
INTERSECTION 25	**INTERSECTION 26**	**INTERSECTION 27**	**INTERSECTION 28**	**INTERSECTION 29**	**INTERSECTION 30**
FOR FUTURE USE	FOR FUTURE USE	FOR FUTURE USE	FOR FUTURE USE	FOR FUTURE USE	FOR FUTURE USE
LEGEND	**INTERSECTION 31**	**INTERSECTION 32**	**INTERSECTION 33**	**INTERSECTION 34**	**INTERSECTION 35**	**INTERSECTION 36**	**INTERSECTION 37**
Existing Roadway Network (2006) Planned / Recommended Roadway Network (2011) Planned / Recommended Improvements Due Background Development (2011) AM/PM AM/PM AM/PM Peak Hour Traffic Volumes	FOR FUTURE USE	FOR FUTURE USE	FOR FUTURE USE	FOR FUTURE USE	FOR FUTURE USE		FOR FUTURE USE

Appendix H-7A
Trips Generated by Background Development (2011)
Commonwealth Center (Office)

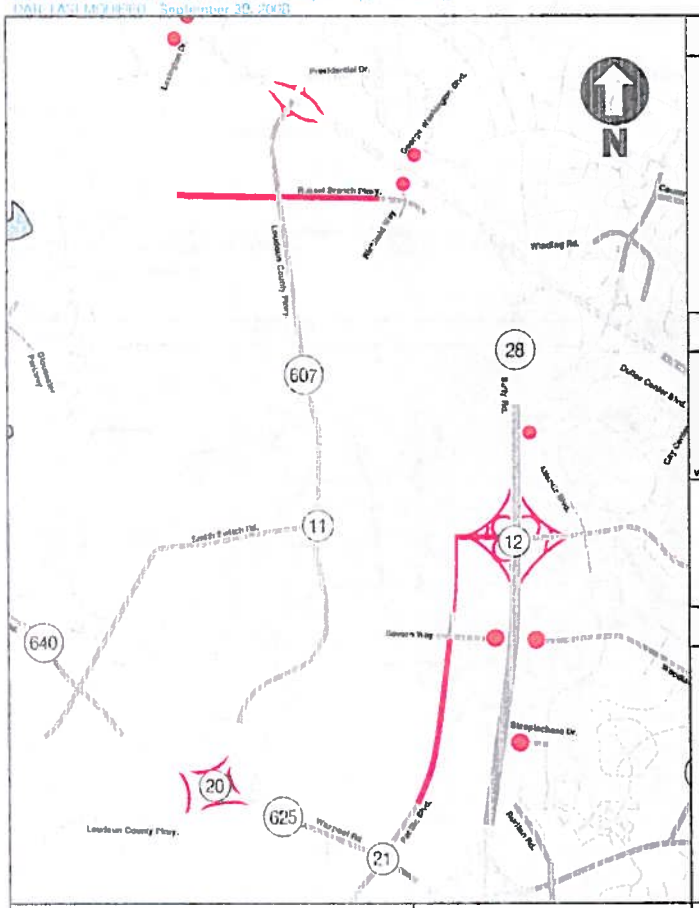

INTERSECTION 3	INTERSECTION 11	INTERSECTION 12	INTERSECTION 20
PLANNED INTERCHANGE	Smith Switch Rd. 0 0 6 / Loudoun County Pkwy. 0 0 0 / 0 8	0 4 1 / 2 0 0 / 0 0 0 / Nokes Blvd. 0 5 0	Farmwell Rd. 2 3 2 / Loudoun County Pkwy. 2 0 0 / 3 0 0 / Waxpool Rd. 1 3 0
INTERSECTION 21	**INTERSECTION 26**	**INTERSECTION 27**	**INTERSECTION 28**
Waxpool Rd. 0 0 / Pacific Blvd. 0 1 0 / 0 1 1 / 2 0 0	FOR FUTURE USE	FOR FUTURE USE	FOR FUTURE USE
INTERSECTION 29	**INTERSECTION 30**	**INTERSECTION 31**	**INTERSECTION 32**
FOR FUTURE USE	FOR FUTURE USE	FOR FUTURE USE	FOR FUTURE USE
LEGEND	**INTERSECTION 33**	**INTERSECTION 34**	**INTERSECTION 35**	**INTERSECTION 36**	**INTERSECTION 37**
Existing Roadway Network (2008) Planned/Recommended Roadway Network (2011) Peak Hour Traffic Volumes	FOR FUTURE USE	FOR FUTURE USE	FOR FUTURE USE	FOR FUTURE USE	FOR FUTURE USE

Appendix H-7B
Trips Generated by Background Development (2011)
Commonwealth Center (Office)

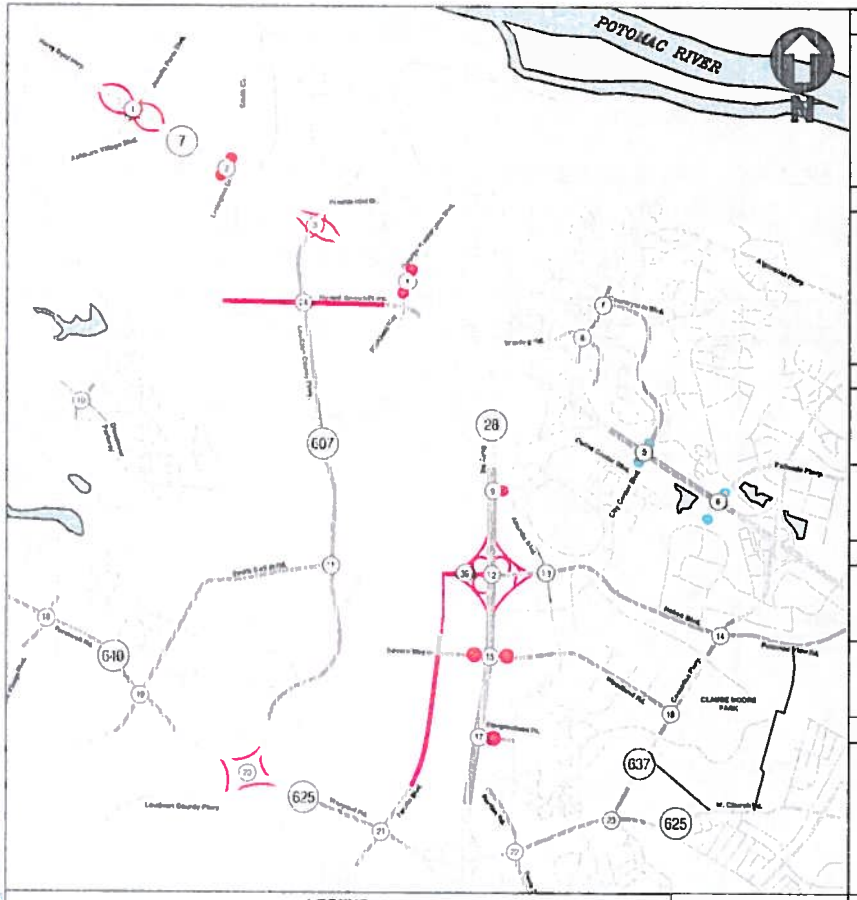

INTERSECTION 1	INTERSECTION 2	INTERSECTION 3	INTERSECTION 4	INTERSECTION 5	INTERSECTION 6
REMOVE INTERSECTION	REMOVE INTERSECTION	REMOVE INTERSECTION	REMOVE INTERSECTION		
INTERSECTION 7	**INTERSECTION 8**	**INTERSECTION 9**	**INTERSECTION 10**	**INTERSECTION 11**	**INTERSECTION 12**
		REMOVE INTERSECTION			
INTERSECTION 13	**INTERSECTION 14**	**INTERSECTION 15**	**INTERSECTION 16**	**INTERSECTION 17**	**INTERSECTION 18**
		REMOVE INTERSECTION		REMOVE INTERSECTION	
INTERSECTION 19	**INTERSECTION 20**	**INTERSECTION 21**	**INTERSECTION 22**	**INTERSECTION 23**	**INTERSECTION 24**
INTERSECTION 25	**INTERSECTION 26**	**INTERSECTION 27**	**INTERSECTION 28**	**INTERSECTION 29**	**INTERSECTION 30**
FOR FUTURE USE	FOR FUTURE USE	FOR FUTURE USE	FOR FUTURE USE	FOR FUTURE USE	FOR FUTURE USE
INTERSECTION 31	**INTERSECTION 32**	**INTERSECTION 33**	**INTERSECTION 34**	**INTERSECTION 35**	**INTERSECTION 36**	**INTERSECTION 37**
FOR FUTURE USE	FOR FUTURE USE	FOR FUTURE USE	FOR FUTURE USE	FOR FUTURE USE		FOR FUTURE USE

LEGEND

- Existing Roadway Network (2003)
- Planned / Recommended Roadway Network (2011)
- Planned / Recommended Improvements Due Background Development (2011)
- AM/PM / AM/PM / AM/PM — Peak Hour Traffic Volumes

Appendix H-8A
Trips Generated by Background Development (2011)
Dulles Town Center (Office)

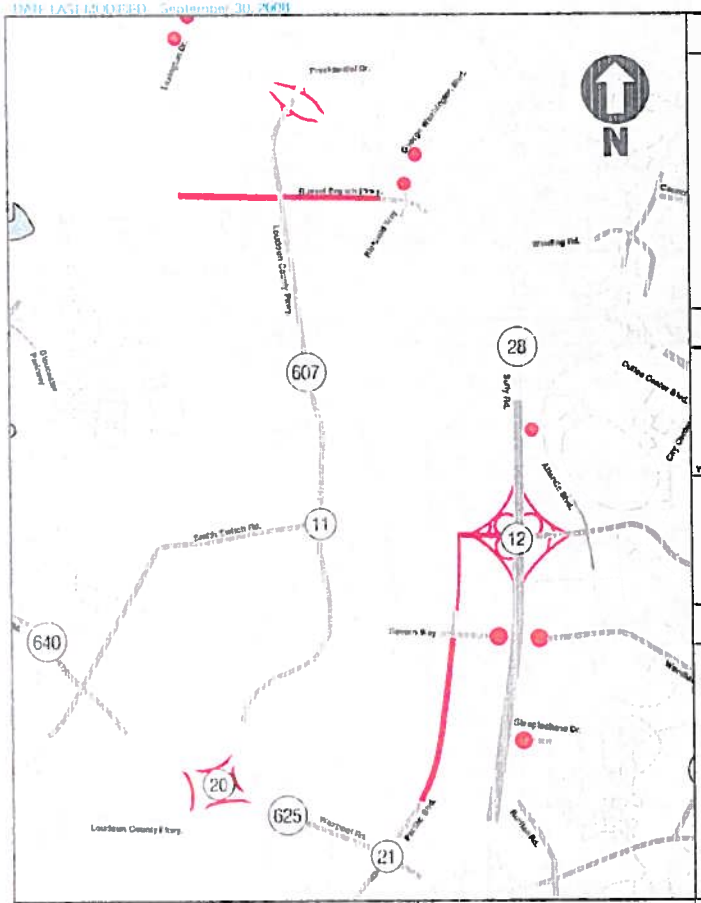

INTERSECTION 3	INTERSECTION 11	INTERSECTION 12	INTERSECTION 20
PLANNED INTERCHANGE	Smith Switch Rd. 0 0 0 / Loudoun County Pkwy. 0 0 0	0 0 31 / Nokes Blvd. 0 0 0 58	Farmwell Rd. 0 6 8 / Loudoun County Pkwy. 0 12 0 / Waxpool Rd. 14
INTERSECTION 21	**INTERSECTION 26**	**INTERSECTION 27**	**INTERSECTION 28**
Waxpool Rd. 0 26 0 / Pacific Blvd. 0 14 4	FOR FUTURE USE	FOR FUTURE USE	FOR FUTURE USE
INTERSECTION 29	**INTERSECTION 30**	**INTERSECTION 31**	**INTERSECTION 32**
FOR FUTURE USE	FOR FUTURE USE	FOR FUTURE USE	FOR FUTURE USE
LEGEND	**INTERSECTION 33**	**INTERSECTION 34**	**INTERSECTION 35**	**INTERSECTION 36**	**INTERSECTION 37**
Existing Roadway Network (2008) Planned/Recommended Roadway Network (2011) SAT SAT SAT Peak Hour Traffic Volumes	FOR FUTURE USE	FOR FUTURE USE	FOR FUTURE USE	FOR FUTURE USE	FOR FUTURE USE

Appendix H-8B
Trips Generated by Background Development (2011)
Dulles Town Center (Office)

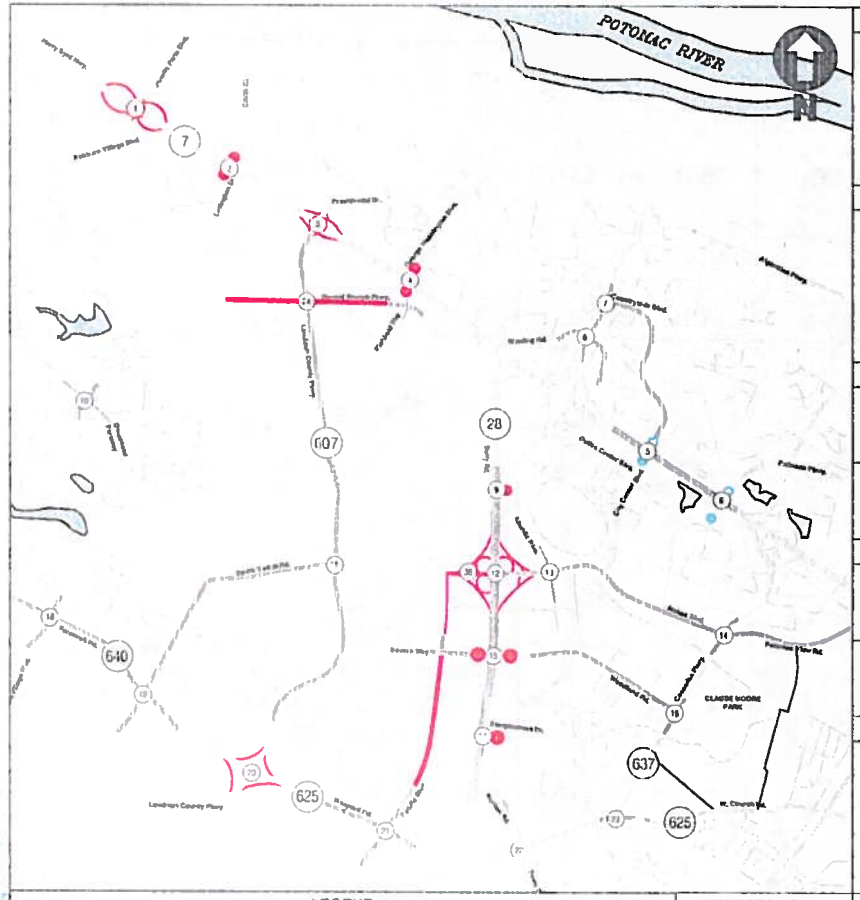

INTERSECTION 1	INTERSECTION 2	INTERSECTION 3	INTERSECTION 4	INTERSECTION 5	INTERSECTION 6
REMOVE INTERSECTION	REMOVE INTERSECTION	REMOVE INTERSECTION	REMOVE INTERSECTION		
INTERSECTION 7	**INTERSECTION 8**	**INTERSECTION 9**	**INTERSECTION 10**	**INTERSECTION 11**	**INTERSECTION 12**
		REMOVE INTERSECTION			
INTERSECTION 13	**INTERSECTION 14**	**INTERSECTION 15**	**INTERSECTION 16**	**INTERSECTION 17**	**INTERSECTION 18**
		REMOVE INTERSECTION		REMOVE INTERSECTION	
INTERSECTION 19	**INTERSECTION 20**	**INTERSECTION 21**	**INTERSECTION 22**	**INTERSECTION 23**	**INTERSECTION 24**
INTERSECTION 25	**INTERSECTION 26**	**INTERSECTION 27**	**INTERSECTION 28**	**INTERSECTION 29**	**INTERSECTION 30**
FOR FUTURE USE	FOR FUTURE USE	FOR FUTURE USE	FOR FUTURE USE	FOR FUTURE USE	FOR FUTURE USE
LEGEND	**INTERSECTION 31**	**INTERSECTION 32**	**INTERSECTION 33**	**INTERSECTION 34**	**INTERSECTION 35**	**INTERSECTION 36**	**INTERSECTION 37**
Existing Roadway Network (2003) Planned / Recommended Roadway Network (2011) Planned / Recommended Improvements Due Background Development (2011) AM/PM AM/PM AM/PM Peak Hour Traffic Volumes	FOR FUTURE USE	FOR FUTURE USE	FOR FUTURE USE	FOR FUTURE USE	FOR FUTURE USE		FOR FUTURE USE

Appendix H-9A
Trips Generated by Background Development (2011)
Dulles Town Center (Residential)

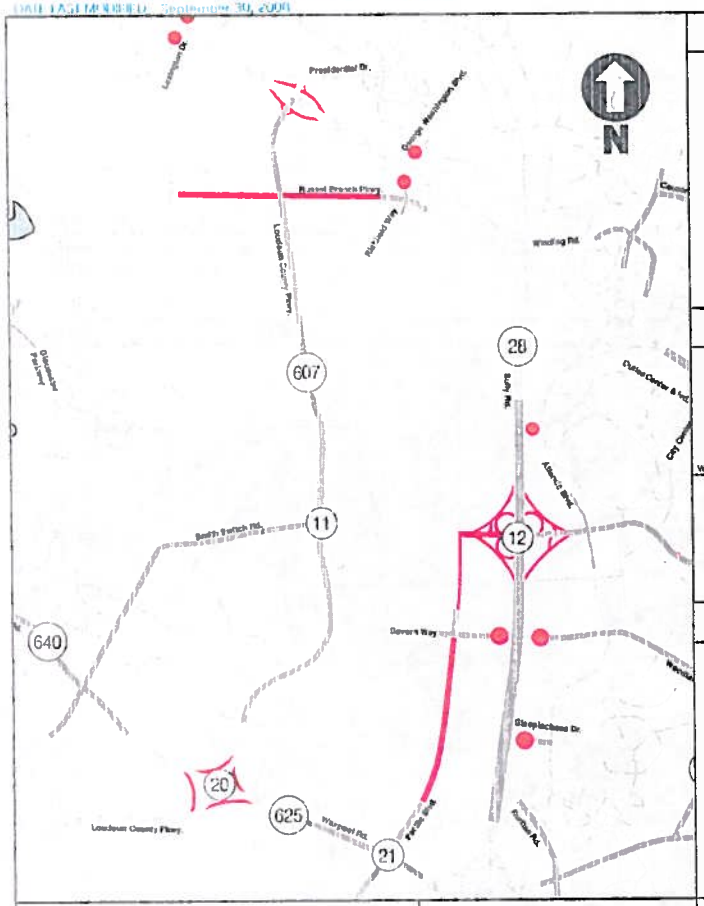

INTERSECTION 3	INTERSECTION 11	INTERSECTION 12	INTERSECTION 20
PLANNED INTERCHANGE	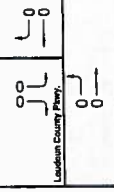	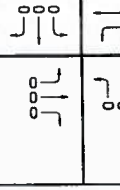	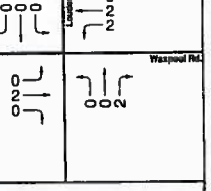

INTERSECTION 21	INTERSECTION 26	INTERSECTION 27	INTERSECTION 28
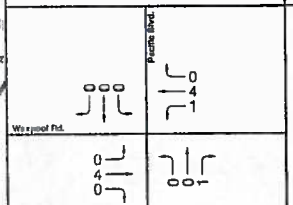	FOR FUTURE USE	FOR FUTURE USE	FOR FUTURE USE

INTERSECTION 29	INTERSECTION 30	INTERSECTION 31	INTERSECTION 32
FOR FUTURE USE	FOR FUTURE USE	FOR FUTURE USE	FOR FUTURE USE

LEGEND	INTERSECTION 33	INTERSECTION 34	INTERSECTION 35	INTERSECTION 36	INTERSECTION 37
Existing Roadway Network (2008) Planned/Recommended Roadway Network (2011) Peak Hour Traffic Volumes	FOR FUTURE USE	FOR FUTURE USE	FOR FUTURE USE	FOR FUTURE USE	FOR FUTURE USE

Appendix H-9B
Trips Generated by Background Development (2011)
Dulles Town Center (Residential)

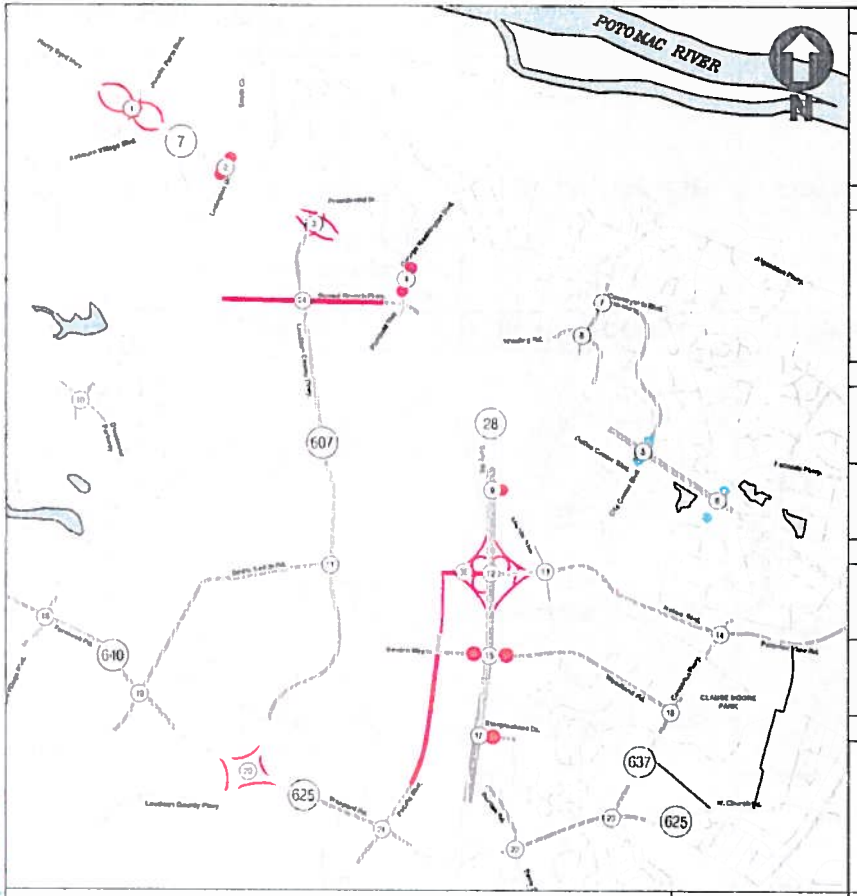

INTERSECTION 1	INTERSECTION 2	INTERSECTION 3	INTERSECTION 4	INTERSECTION 5	INTERSECTION 6
REMOVE INTERSECTION	REMOVE INTERSECTION	REMOVE INTERSECTION	REMOVE INTERSECTION		
INTERSECTION 7	**INTERSECTION 8**	**INTERSECTION 9**	**INTERSECTION 10**	**INTERSECTION 11**	**INTERSECTION 12**
		REMOVE INTERSECTION			
INTERSECTION 13	**INTERSECTION 14**	**INTERSECTION 15**	**INTERSECTION 16**	**INTERSECTION 17**	**INTERSECTION 18**
		REMOVE INTERSECTION		REMOVE INTERSECTION	
INTERSECTION 19	**INTERSECTION 20**	**INTERSECTION 21**	**INTERSECTION 22**	**INTERSECTION 23**	**INTERSECTION 24**
INTERSECTION 25	**INTERSECTION 26**	**INTERSECTION 27**	**INTERSECTION 28**	**INTERSECTION 29**	**INTERSECTION 30**
FOR FUTURE USE	FOR FUTURE USE	FOR FUTURE USE	FOR FUTURE USE	FOR FUTURE USE	FOR FUTURE USE
LEGEND	**INTERSECTION 31**	**INTERSECTION 32**	**INTERSECTION 33**	**INTERSECTION 34**	**INTERSECTION 35**	**INTERSECTION 36**	**INTERSECTION 37**
Existing Roadway Network (2009) Planned / Recommended Roadway Network (2011) Planned / Recommended Improvements Due Background Development (2011) AM/PM AM/PM AM/PM Peak Hour Traffic Volumes	FOR FUTURE USE	FOR FUTURE USE	FOR FUTURE USE	FOR FUTURE USE	FOR FUTURE USE		FOR FUTURE USE

Appendix H-10A
Trips Generated by Background Development (2011)
Landsdown on the Potomac (Residential)

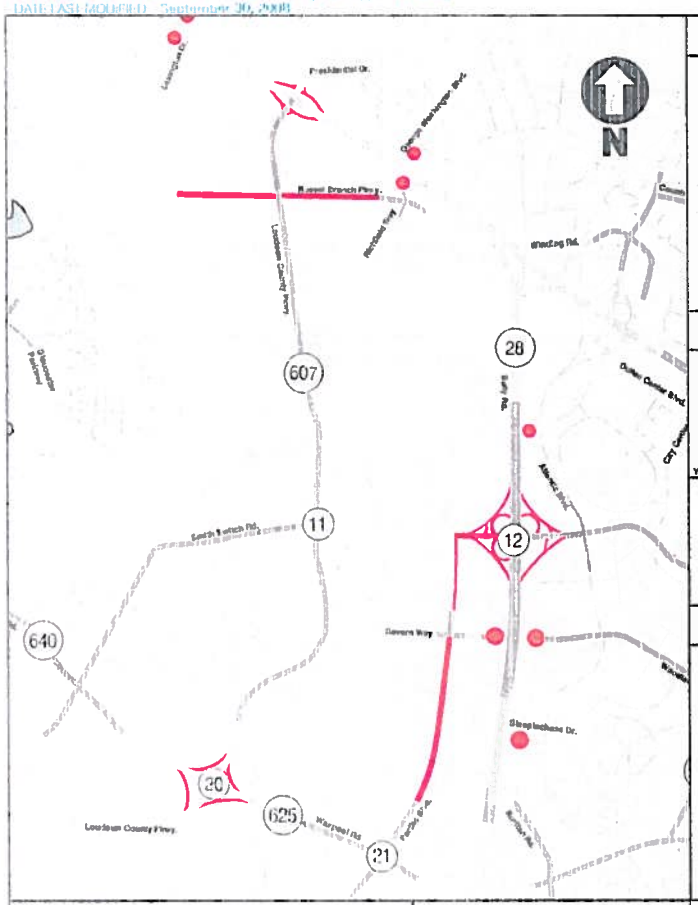

INTERSECTION 3	INTERSECTION 11	INTERSECTION 12	INTERSECTION 20
PLANNED INTERCHANGE	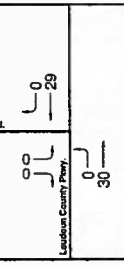	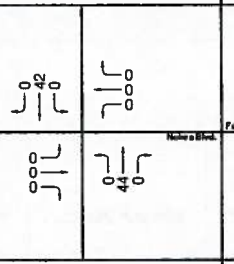	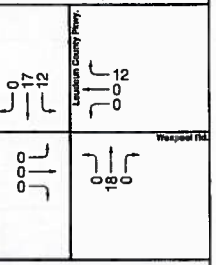
INTERSECTION 21	**INTERSECTION 26**	**INTERSECTION 27**	**INTERSECTION 28**
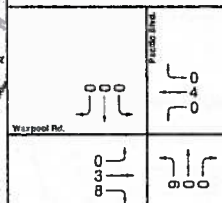	FOR FUTURE USE	FOR FUTURE USE	FOR FUTURE USE
INTERSECTION 29	**INTERSECTION 30**	**INTERSECTION 31**	**INTERSECTION 32**
FOR FUTURE USE	FOR FUTURE USE	FOR FUTURE USE	FOR FUTURE USE
LEGEND	**INTERSECTION 33**	**INTERSECTION 34**	**INTERSECTION 35**	**INTERSECTION 36**	**INTERSECTION 37**
Existing Roadway Network (2008) Planned/Recommended Roadway Network (2011) Peak Hour Traffic Volumes	FOR FUTURE USE	FOR FUTURE USE	FOR FUTURE USE	FOR FUTURE USE	FOR FUTURE USE

Appendix H-10B
Trips Generated by Background Development (2011)
Landsdown on the Potomac (Residential)

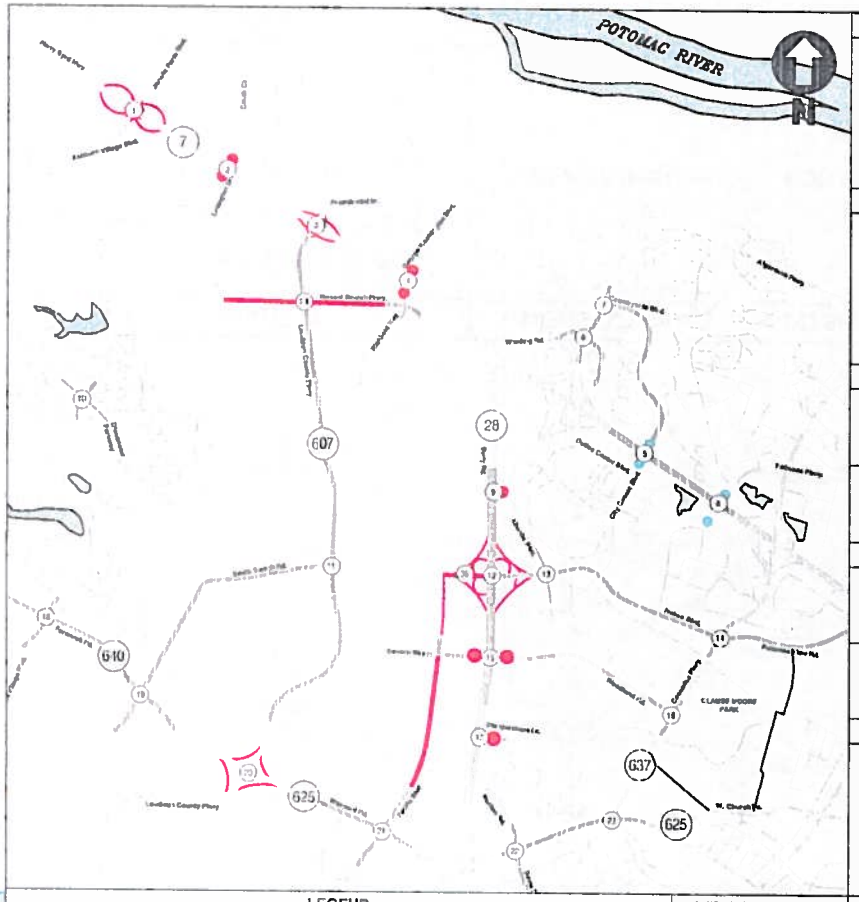

INTERSECTION 1	INTERSECTION 2	INTERSECTION 3	INTERSECTION 4	INTERSECTION 5	INTERSECTION 6
REMOVE INTERSECTION	REMOVE INTERSECTION	REMOVE INTERSECTION	REMOVE INTERSECTION		
INTERSECTION 7	**INTERSECTION 8**	**INTERSECTION 9**	**INTERSECTION 10**	**INTERSECTION 11**	**INTERSECTION 12**
		REMOVE INTERSECTION			
INTERSECTION 13	**INTERSECTION 14**	**INTERSECTION 15**	**INTERSECTION 16**	**INTERSECTION 17**	**INTERSECTION 18**
		REMOVE INTERSECTION		REMOVE INTERSECTION	
INTERSECTION 19	**INTERSECTION 20**	**INTERSECTION 21**	**INTERSECTION 22**	**INTERSECTION 23**	**INTERSECTION 24**
INTERSECTION 25	**INTERSECTION 26**	**INTERSECTION 27**	**INTERSECTION 28**	**INTERSECTION 29**	**INTERSECTION 30**
FOR FUTURE USE	FOR FUTURE USE	FOR FUTURE USE	FOR FUTURE USE	FOR FUTURE USE	FOR FUTURE USE
INTERSECTION 31	**INTERSECTION 32**	**INTERSECTION 33**	**INTERSECTION 34**	**INTERSECTION 35**	**INTERSECTION 36**	**INTERSECTION 37**
FOR FUTURE USE	FOR FUTURE USE	FOR FUTURE USE	FOR FUTURE USE	FOR FUTURE USE		FOR FUTURE USE

LEGEND

- Existing Roadway Network (2009)
- Planned / Recommended Roadway Network (2011)
- Planned / Recommended Improvements Due Background Development (2011)
- AM/PM / AM/PM / AM/PM — Peak Hour Traffic Volumes

Appendix H-11A
Trips Generated by Background Development (2011)
Landsdown on the Potomac (Retail)

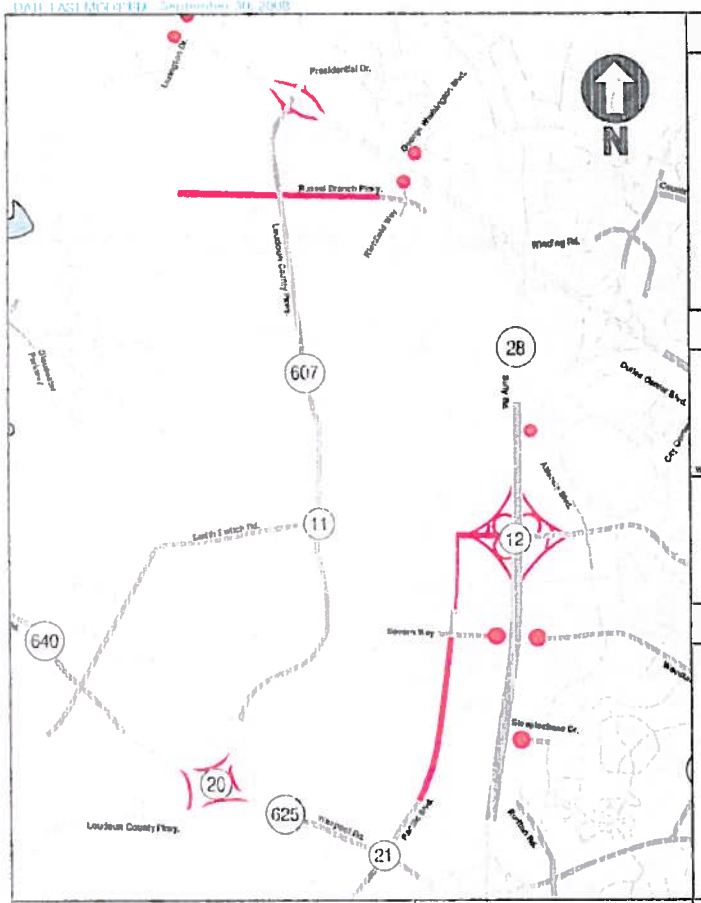

INTERSECTION 3	INTERSECTION 11	INTERSECTION 12	INTERSECTION 20
PLANNED INTERCHANGE	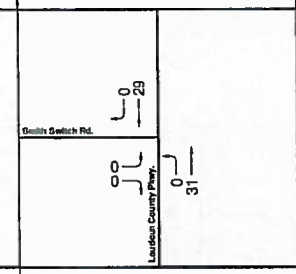	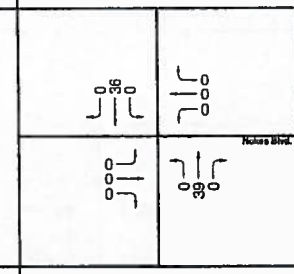	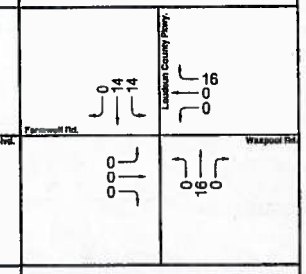
INTERSECTION 21	**INTERSECTION 26**	**INTERSECTION 27**	**INTERSECTION 28**
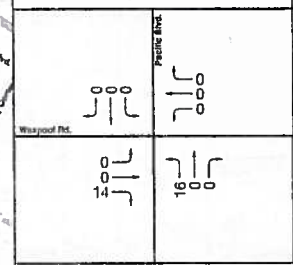	FOR FUTURE USE	FOR FUTURE USE	FOR FUTURE USE
INTERSECTION 29	**INTERSECTION 30**	**INTERSECTION 31**	**INTERSECTION 32**
FOR FUTURE USE	FOR FUTURE USE	FOR FUTURE USE	FOR FUTURE USE
INTERSECTION 33	**INTERSECTION 34**	**INTERSECTION 35**	**INTERSECTION 36**	**INTERSECTION 37**
FOR FUTURE USE	FOR FUTURE USE	FOR FUTURE USE	FOR FUTURE USE	FOR FUTURE USE

LEGEND

- Existing Roadway Network (2008)
- Planned/Recommended Roadway Network (2011)
- Peak Hour Traffic Volumes

Appendix H-11B
Trips Generated by Background Development (2011)
Landsdown on the Potomac (Retail)

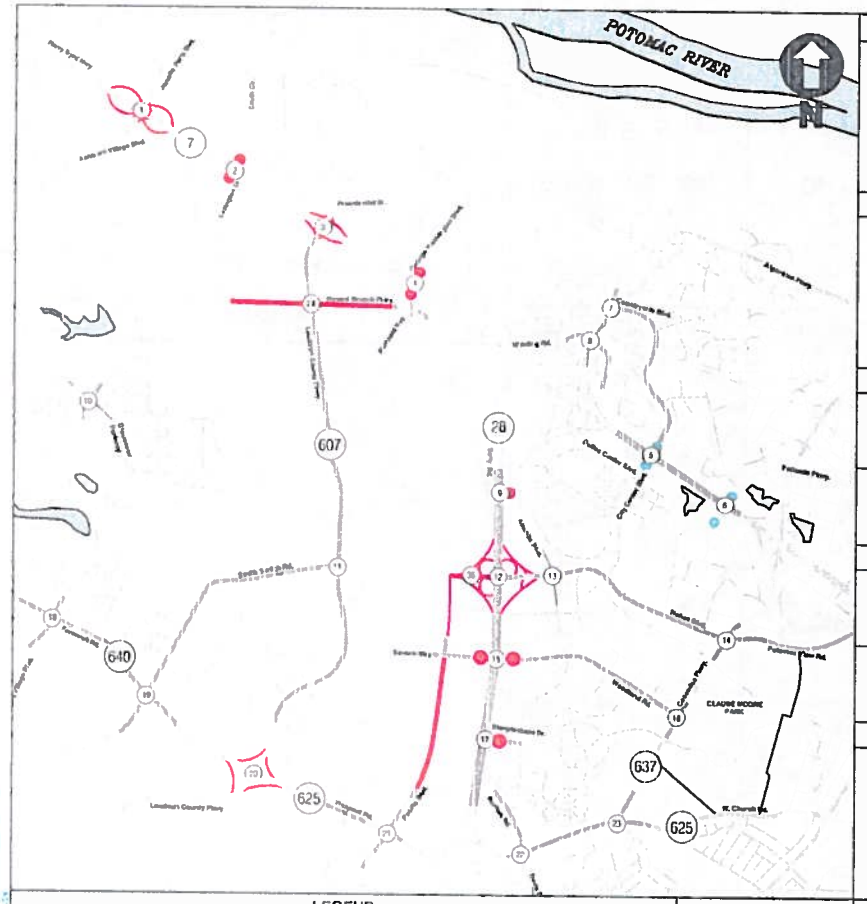

INTERSECTION 1	INTERSECTION 2	INTERSECTION 3	INTERSECTION 4	INTERSECTION 5	INTERSECTION 6
REMOVE INTERSECTION	REMOVE INTERSECTION	REMOVE INTERSECTION	REMOVE INTERSECTION		
INTERSECTION 7	**INTERSECTION 8**	**INTERSECTION 9**	**INTERSECTION 10**	**INTERSECTION 11**	**INTERSECTION 12**
		REMOVE INTERSECTION			
INTERSECTION 13	**INTERSECTION 14**	**INTERSECTION 15**	**INTERSECTION 16**	**INTERSECTION 17**	**INTERSECTION 18**
		REMOVE INTERSECTION		REMOVE INTERSECTION	
INTERSECTION 19	**INTERSECTION 20**	**INTERSECTION 21**	**INTERSECTION 22**	**INTERSECTION 23**	**INTERSECTION 24**
INTERSECTION 25	**INTERSECTION 26**	**INTERSECTION 27**	**INTERSECTION 28**	**INTERSECTION 29**	**INTERSECTION 30**
FOR FUTURE USE	FOR FUTURE USE	FOR FUTURE USE	FOR FUTURE USE	FOR FUTURE USE	FOR FUTURE USE
LEGEND	**INTERSECTION 31**	**INTERSECTION 32**	**INTERSECTION 33**	**INTERSECTION 34**	**INTERSECTION 35**	**INTERSECTION 36**	**INTERSECTION 37**
Existing Roadway Network (2003) Planned / Recommended Roadway Network (2011) Planned / Recommended Improvements Due Background Development (2011) AM/PM1 / AM/PM2 / AM/PM — Peak Hour Traffic Volumes	FOR FUTURE USE	FOR FUTURE USE	FOR FUTURE USE	FOR FUTURE USE	FOR FUTURE USE		FOR FUTURE USE

Appendix H-12A
Trips Generated by Background Development (2011)
Ashburn Executive Center (Office)

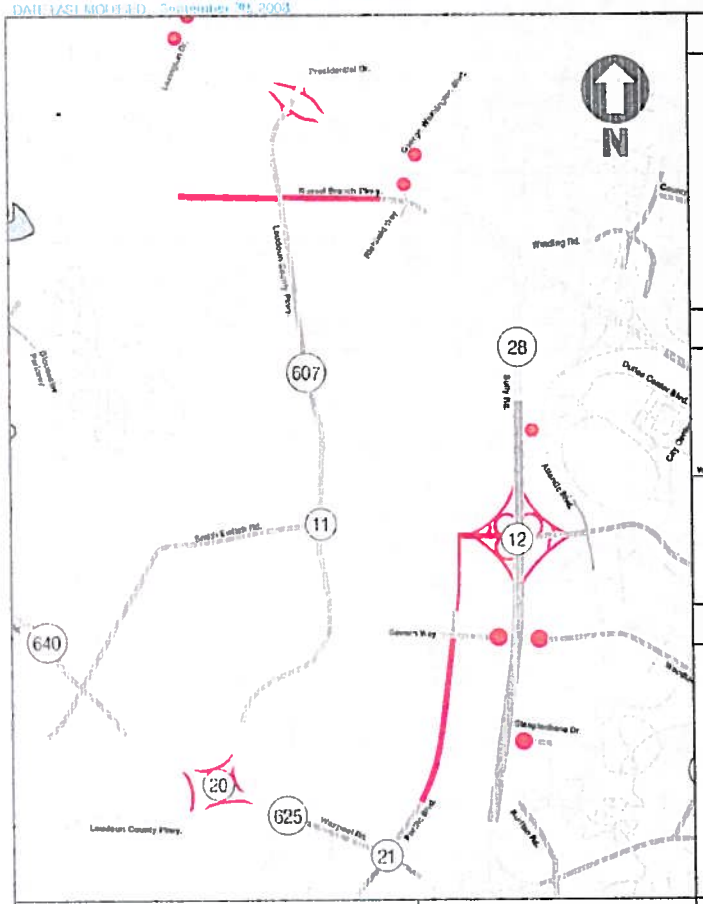

INTERSECTION 3	INTERSECTION 11	INTERSECTION 12	INTERSECTION 20
PLANNED INTERCHANGE	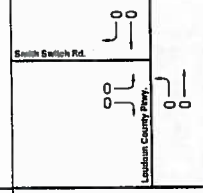	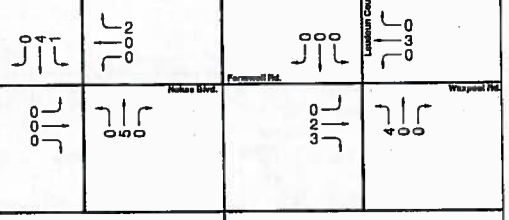	
INTERSECTION 21	**INTERSECTION 26**	**INTERSECTION 27**	**INTERSECTION 28**
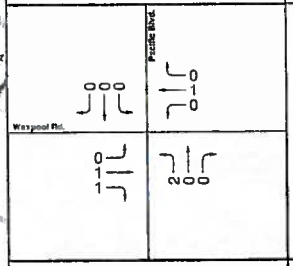	FOR FUTURE USE	FOR FUTURE USE	FOR FUTURE USE
INTERSECTION 29	**INTERSECTION 30**	**INTERSECTION 31**	**INTERSECTION 32**
FOR FUTURE USE	FOR FUTURE USE	FOR FUTURE USE	FOR FUTURE USE
LEGEND	**INTERSECTION 33**	**INTERSECTION 34**	**INTERSECTION 35**	**INTERSECTION 36**	**INTERSECTION 37**
Existing Roadway Network (2008) Planned/Recommended Roadway Network (2011) Peak Hour Traffic Volumes	FOR FUTURE USE	FOR FUTURE USE	FOR FUTURE USE	FOR FUTURE USE	FOR FUTURE USE

Appendix H-12B
Trips Generated by Background Development (2011)
Ashburn Executive Center (Office)

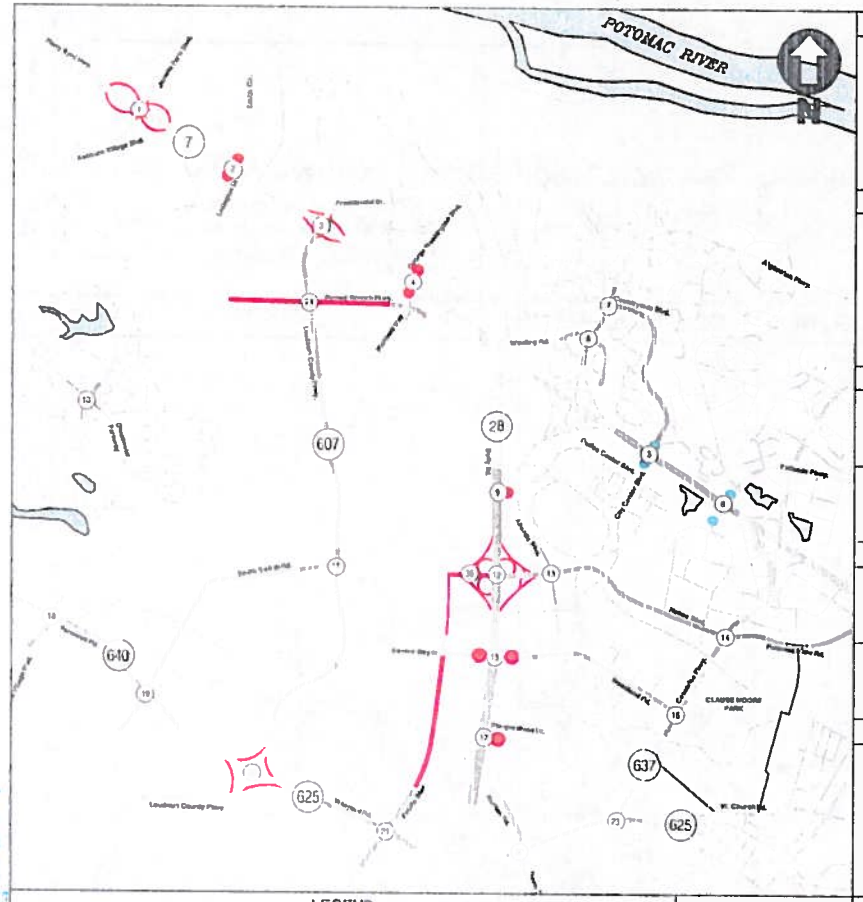

INTERSECTION 1	INTERSECTION 2	INTERSECTION 3	INTERSECTION 4	INTERSECTION 5	INTERSECTION 6
REMOVE INTERSECTION	REMOVE INTERSECTION	REMOVE INTERSECTION	REMOVE INTERSECTION		
INTERSECTION 7	**INTERSECTION 8**	**INTERSECTION 9**	**INTERSECTION 10**	**INTERSECTION 11**	**INTERSECTION 12**
		REMOVE INTERSECTION			
INTERSECTION 13	**INTERSECTION 14**	**INTERSECTION 15**	**INTERSECTION 16**	**INTERSECTION 17**	**INTERSECTION 18**
		REMOVE INTERSECTION		REMOVE INTERSECTION	
INTERSECTION 19	**INTERSECTION 20**	**INTERSECTION 21**	**INTERSECTION 22**	**INTERSECTION 23**	**INTERSECTION 24**
INTERSECTION 25	**INTERSECTION 26**	**INTERSECTION 27**	**INTERSECTION 28**	**INTERSECTION 29**	**INTERSECTION 30**
FOR FUTURE USE	FOR FUTURE USE	FOR FUTURE USE	FOR FUTURE USE	FOR FUTURE USE	FOR FUTURE USE
INTERSECTION 31	**INTERSECTION 32**	**INTERSECTION 33**	**INTERSECTION 34**	**INTERSECTION 35**	**INTERSECTION 36**	**INTERSECTION 37**
FOR FUTURE USE	FOR FUTURE USE	FOR FUTURE USE	FOR FUTURE USE	FOR FUTURE USE		FOR FUTURE USE

LEGEND

- Existing Roadway Network (2006)
- Planned / Recommended Roadway Network (2011)
- Planned / Recommended Improvements Due Background Development (2011)
- AM/PM / AM/PM / AM/PM — Peak Hour Traffic Volumes

Appendix H-13A
Trips Generated by Background Development (2011)
Ashburn Village Research Park (Office)

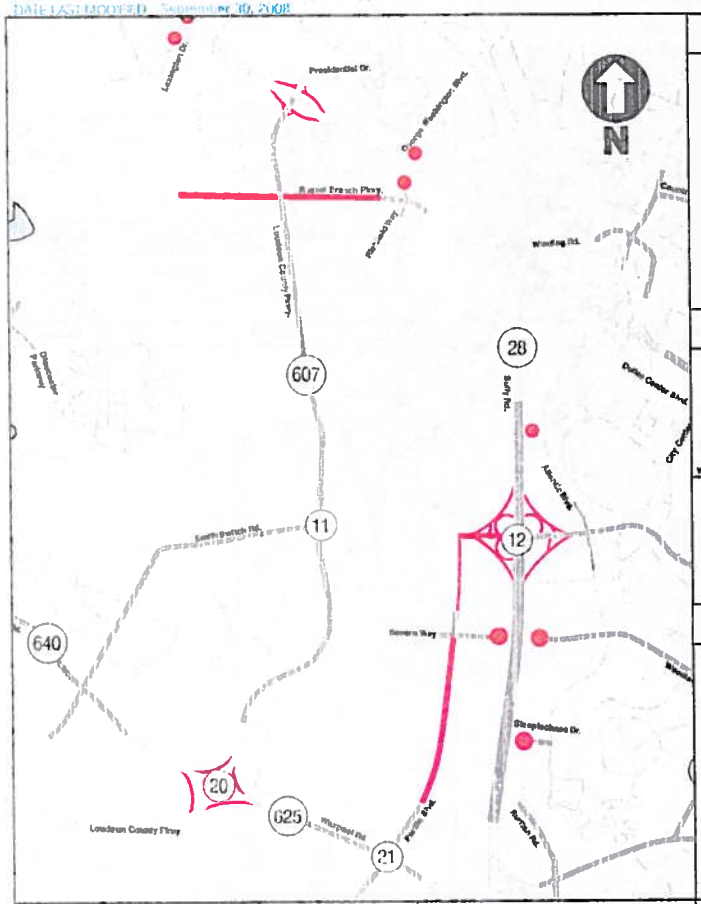

INTERSECTION 3	INTERSECTION 11	INTERSECTION 12	INTERSECTION 20
PLANNED INTERCHANGE	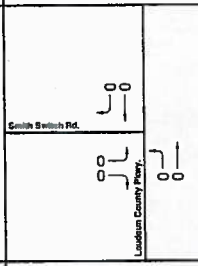	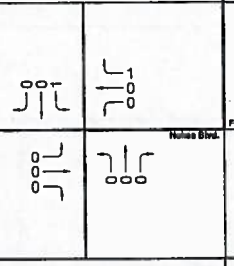	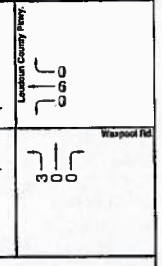

INTERSECTION 21	INTERSECTION 26	INTERSECTION 27	INTERSECTION 28
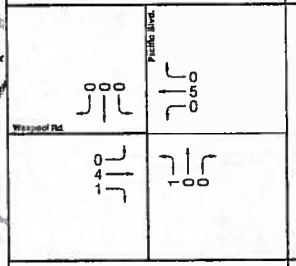	FOR FUTURE USE	FOR FUTURE USE	FOR FUTURE USE

INTERSECTION 29	INTERSECTION 30	INTERSECTION 31	INTERSECTION 32
FOR FUTURE USE	FOR FUTURE USE	FOR FUTURE USE	FOR FUTURE USE

LEGEND	INTERSECTION 33	INTERSECTION 34	INTERSECTION 35	INTERSECTION 36	INTERSECTION 37
Existing Roadway Network (2008) Planned/Recommended Roadway Network (2011) Peak Hour Traffic Volumes	FOR FUTURE USE	FOR FUTURE USE	FOR FUTURE USE	FOR FUTURE USE	FOR FUTURE USE

Appendix H-13B
Trips Generated by Background Development (2011)
Ashburn Village Research Park (Office)

APPENDIX I

OTHER APPROVED 2015 BACKGROUND DEVELOPMENTS (LOCATION MAP AND TRIPS GENERATED)

FUTURE BACKGROUND TRIP GENERATION WORKSHEET

Data collected from the Institute of Transportation Engineers (ITE) Trip Generation, 7th Edition publication.

Interim Build-Out Year = 2011

Future Background Development	ITE Code	Size	Units	Weekday							Saturday			
				AM Peak Hour			PM Peak Hour			Daily	Peak Hour of Generator			Daily
				In	Out	Total	In	Out	Total	Total	In	Out	Total	Total
Ashburn Executive Center														
Office	710	200.0	kSF	288	39	327	52	251	303	2,275	36	29	65	447
Subtotal Ashburn Executive Center				288	39	327	52	251	303	2,275	36	29	65	447
Beaumeade														
Industrial Park	110	100.0	kSF	81	11	92	12	86	98	645	7	7	14	249
Subtotal Beaumeade				81	11	92	12	86	98	645	7	7	14	249
Commonwealth Center														
Office	710	171.0	kSF	253	35	288	46	224	270	2,016	32	26	58	385
Subtotal Commonwealth Center				253	35	288	46	224	270	2,016	32	26	58	385
Lansdowne on the Potomac														
Single Family Attached	230	122	DU	11	50	61	48	23	71	761	43	36	79	870
Multi-Family Attached	220	350	DU	36	140	176	138	73	211	2,254	82	81	163	2,492
Adult/Retirement Housing	252	350	DU	29	35	64	53	34	87	2,767	53	52	105	882
Retail	820	100.0	kSF	96	61	157	301	326	627	6,792	393	361	754	9,240
Subtotal Lansdowne on the Potomac				172	286	458	540	456	996	12,574	571	530	1,101	13,484
Loudoun Pointe														
Industrial Park	110	100.0	kSF	81	11	92	12	86	98	645	7	7	14	249
Subtotal Loudoun Pointe				81	11	92	12	86	98	645	7	7	14	249
Potomac Green														
Elderly Housing - Detached	251	233	DU	44	71	115	98	63	160	2,185	31	32	63	646
Elderly Housing - Attached	253	753	DU	33	21	55	87	68	155	1,961	113	113	226	1,891
Subtotal Potomac Green				77	92	170	185	131	315	4,146	144	145	289	2,537
Ashburn Corporate Center														
Industrial Park	110	100.0	kSF	81	11	92	12	86	98	645	7	7	14	249
Subtotal Ashburn Corporate Center				81	11	92	12	86	98	645	7	7	14	249
University Center														
Office	710	150.0	kSF	228	31	259	42	205	247	1,823	29	23	52	340
Subtotal University Center				228	31	259	42	205	247	1,823	29	23	52	340
Ashburn Village Research Park														
Warehousing	150	102.0	kSF	69	15	84	14	67	81	726	9	4	13	125
Office	710	98.0	kSF	163	22	185	32	157	189	1,313	20	17	37	229
Subtotal Ashburn Village Research Park				232	37	269	46	224	270	2,039	29	21	50	354
Dulles Town Center														
Office	710	209.9	kSF	300	40	340	54	260	314	2,362	37	31	68	468
Business Park	770	86.2	kSF	105	19	124	31	101	132	1,675	18	15	33	204
Hotel	310	100	Rooms	26	15	41	32	27	59	522	42	32	74	668
Elderly Housing	250	153	DU	32	32	64	32	32	64	521	24	24	48	397
Subtotal Dulles Town Center				463	106	569	149	420	569	5,080	121	102	223	1,737
One Loudoun Community														
Office Tower	710	1,120.0	kSF	890	110	1,000	159	742	901	5,143	142	120	262	2,416
Multi-Family/Condo	220	1,118	DU	110	442	552	411	222	633	6,870	239	239	478	8,521
Townhomes	230	734	DU	43	211	254	206	102	308	3,494	139	117	256	3,086
TDM		5%		0	-33	-33	-31	0	-31	-518	-19	-18	-37	-581
Internal to Office		15%		-23	-98	-121	-93	-34	-127	-1,286	-57	-54	-111	-1,742
Internal to Retail		15%		-23	-54	-77	-93	-49	-141	-1,555	-57	-54	-111	-1,742
Net Residential Trips				107	468	575	401	241	642	7,005	245	230	475	7,542
Retail	820	405.0	kSF	222	142	364	760	824	1,584	16,938	938	865	1803	22,407
Grocery Store	850	40.0	kSF	78	50	128	231	221	452	4,070	252	241	493	7,104
Convenience Store w/ Gas Pumps	945	12	Pumps	60	60	121	80	80	161	1,953	114	108	222	no data
Internal to Office		15%		-23	-38	-61	-161	-34	-195	-1,286	-196	-183	-378	4,427
Internal to Residential		15%		-54	-23	-77	-49	-93	-141	-1,555	-196	-183	-378	4,427
Pass-by		15%		-42	-29	-71	-129	-150	-279	-3,016	-186	-183	-378	-4,427
Net Retail Trips				241	183	403	732	849	1,582	17,102	716	665	1364	16230
Hotel	310	250	Rooms	54	35	89	55	49	103	1,305	100	77	177	2,111
Elementary School	520	875	Students	180	147	327	101	124	225	1,125	0	0	0	0
Subtotal One Loudoun Community				1,472	923	2,394	1,448	2,005	3,453	31,684	1,203	1,092	2,296	28,299
TOTAL FUTURE BACKGROUND TRIPS				3,428	1,582	5,010	2,544	4,174	6,717	63,572	2,186	1,989	4,178	48,330

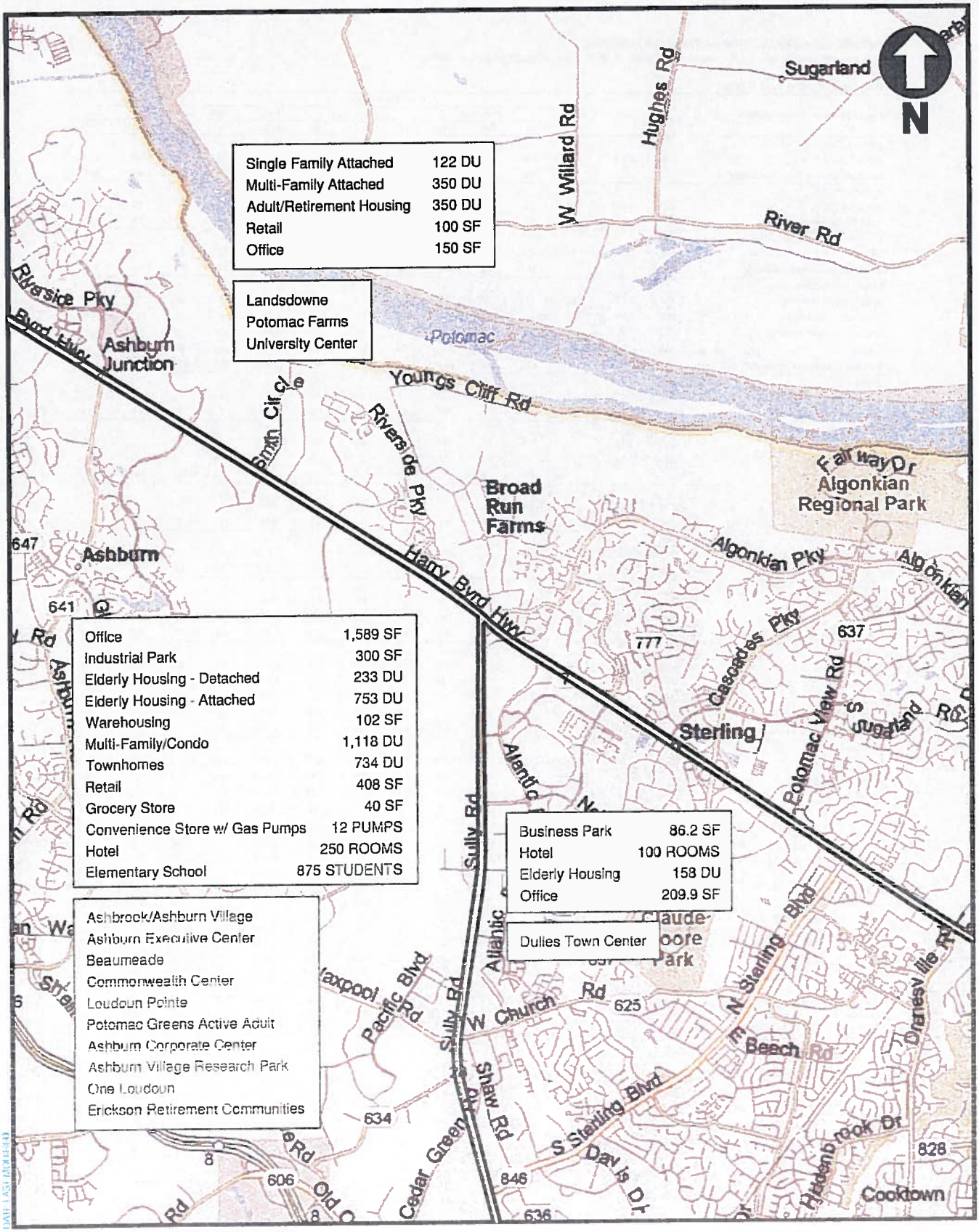

Appendix H
2011 Approved Background Developments

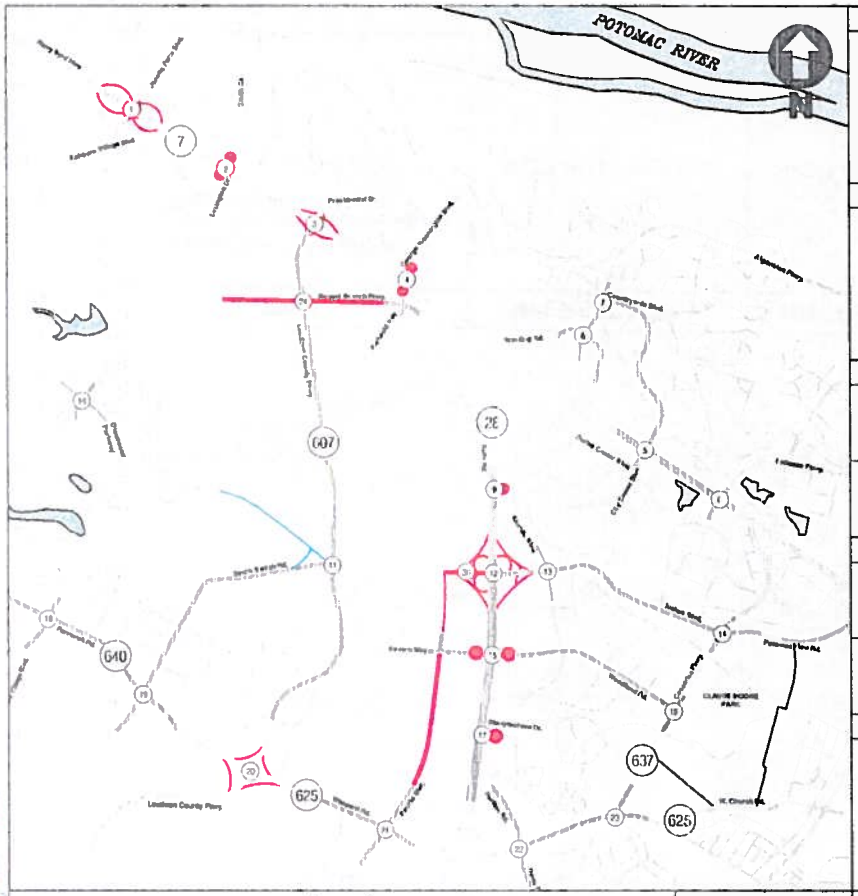

INTERSECTION 1	INTERSECTION 2	INTERSECTION 3	INTERSECTION 4	INTERSECTION 5	INTERSECTION 6
REMOVE INTERSECTION	REMOVE INTERSECTION	REMOVE INTERSECTION	REMOVE INTERSECTION		
INTERSECTION 7	**INTERSECTION 8**	**INTERSECTION 9**	**INTERSECTION 10**	**INTERSECTION 11**	**INTERSECTION 12**
		REMOVE INTERSECTION			
INTERSECTION 13	**INTERSECTION 14**	**INTERSECTION 15**	**INTERSECTION 16**	**INTERSECTION 17**	**INTERSECTION 18**
		REMOVE INTERSECTION		REMOVE INTERSECTION	
INTERSECTION 19	**INTERSECTION 20**	**INTERSECTION 21**	**INTERSECTION 22**	**INTERSECTION 23**	**INTERSECTION 24**
INTERSECTION 25	**INTERSECTION 26**	**INTERSECTION 27**	**INTERSECTION 28**	**INTERSECTION 29**	**INTERSECTION 30**
FOR FUTURE USE	FOR FUTURE USE	FOR FUTURE USE	FOR FUTURE USE	FOR FUTURE USE	FOR FUTURE USE
LEGEND	**INTERSECTION 31**	**INTERSECTION 32**	**INTERSECTION 33**	**INTERSECTION 34**	**INTERSECTION 35**	**INTERSECTION 36**	**INTERSECTION 37**
Existing Roadway Network (2008) Planned / Recommended Roadway Network (2011) Planned / Recommended Improvements Due Background Development (2015) AM/PM AM/PM AM/PM Peak Hour Traffic Volumes	FOR FUTURE USE	FOR FUTURE USE	FOR FUTURE USE	FOR FUTURE USE	FOR FUTURE USE		FOR FUTURE USE

Appendix I-1A
Trips Generated by Background Development (2015)
Ashbrooke/Ashburn Village (Retail)

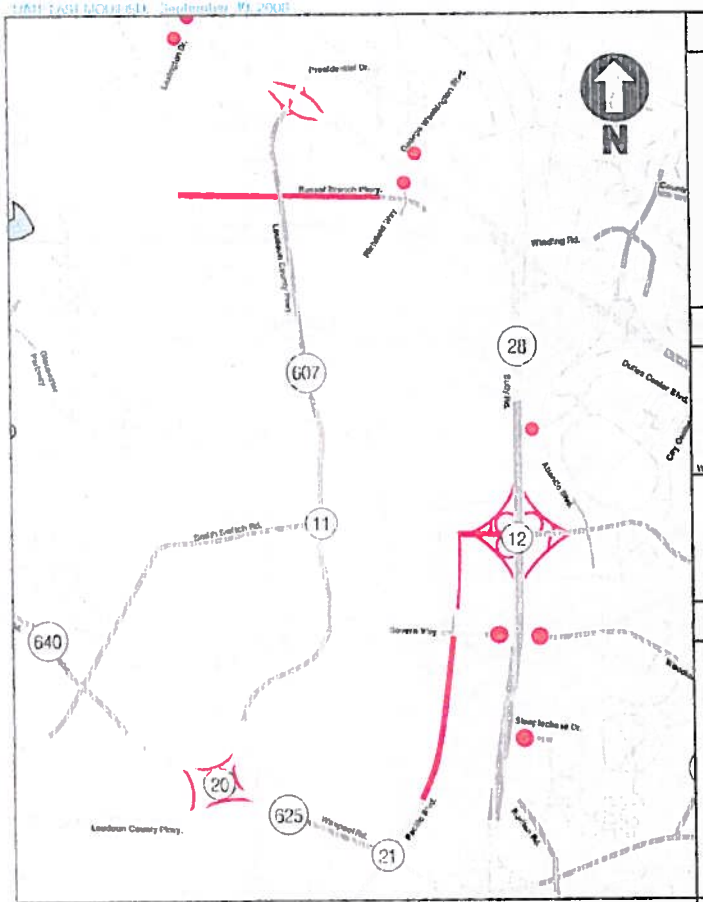

INTERSECTION 3	INTERSECTION 11	INTERSECTION 12	INTERSECTION 20
PLANNED INTERCHANGE	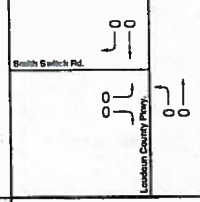	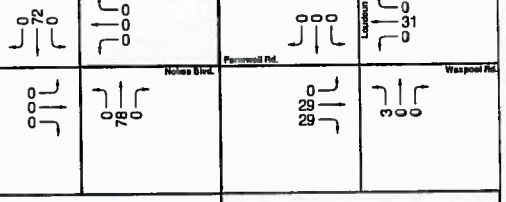	

INTERSECTION 21	INTERSECTION 26	INTERSECTION 27	INTERSECTION 28
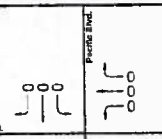	FOR FUTURE USE	FOR FUTURE USE	FOR FUTURE USE

INTERSECTION 29	INTERSECTION 30	INTERSECTION 31	INTERSECTION 32
FOR FUTURE USE	FOR FUTURE USE	FOR FUTURE USE	FOR FUTURE USE

LEGEND	INTERSECTION 33	INTERSECTION 34	INTERSECTION 35	INTERSECTION 36	INTERSECTION 37
Existing Roadway Network (2008) Planned/Recommended Roadway Network (2011) Peak Hour Traffic Volumes	FOR FUTURE USE	FOR FUTURE USE	FOR FUTURE USE	FOR FUTURE USE	FOR FUTURE USE

Appendix I-1B
Trips Generated by Background Development (2015)
Ashbrook/Ashburn Village (Retail)

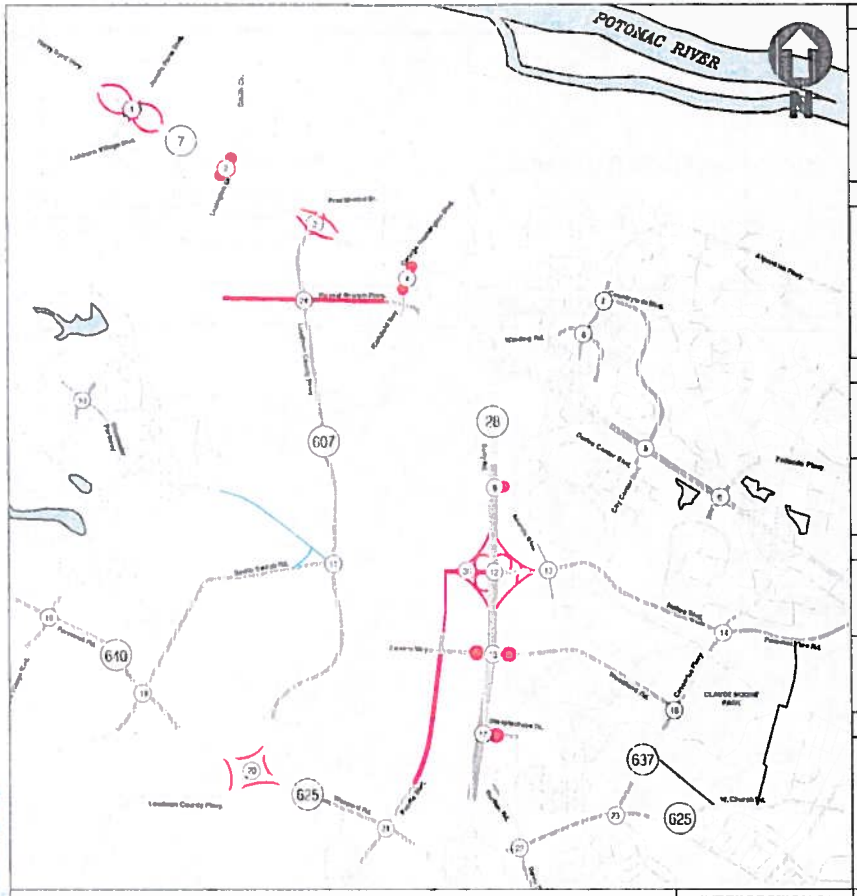

INTERSECTION 1	INTERSECTION 2	INTERSECTION 3	INTERSECTION 4	INTERSECTION 5	INTERSECTION 6
REMOVE INTERSECTION	REMOVE INTERSECTION	REMOVE INTERSECTION	REMOVE INTERSECTION		
INTERSECTION 7	**INTERSECTION 8**	**INTERSECTION 9**	**INTERSECTION 10**	**INTERSECTION 11**	**INTERSECTION 12**
		REMOVE INTERSECTION			
INTERSECTION 13	**INTERSECTION 14**	**INTERSECTION 15**	**INTERSECTION 16**	**INTERSECTION 17**	**INTERSECTION 18**
		REMOVE INTERSECTION		REMOVE INTERSECTION	
INTERSECTION 19	**INTERSECTION 20**	**INTERSECTION 21**	**INTERSECTION 22**	**INTERSECTION 23**	**INTERSECTION 24**
INTERSECTION 25	**INTERSECTION 26**	**INTERSECTION 27**	**INTERSECTION 28**	**INTERSECTION 29**	**INTERSECTION 30**
FOR FUTURE USE	FOR FUTURE USE	FOR FUTURE USE	FOR FUTURE USE	FOR FUTURE USE	FOR FUTURE USE

LEGEND	INTERSECTION 31	INTERSECTION 32	INTERSECTION 33	INTERSECTION 34	INTERSECTION 35	INTERSECTION 36	INTERSECTION 37
Existing Roadway Network (2005) Planned / Recommended Roadway Network (2011) Planned / Recommended Improvements Due Background Development (2015) AM/PM / AM/PM / AM/PM Peak Hour Traffic Volumes	FOR FUTURE USE	FOR FUTURE USE	FOR FUTURE USE	FOR FUTURE USE	FOR FUTURE USE		FOR FUTURE USE

Appendix I-2A
Trips Generated by Background Development (2015)
Ashburn Executive Center (Office)

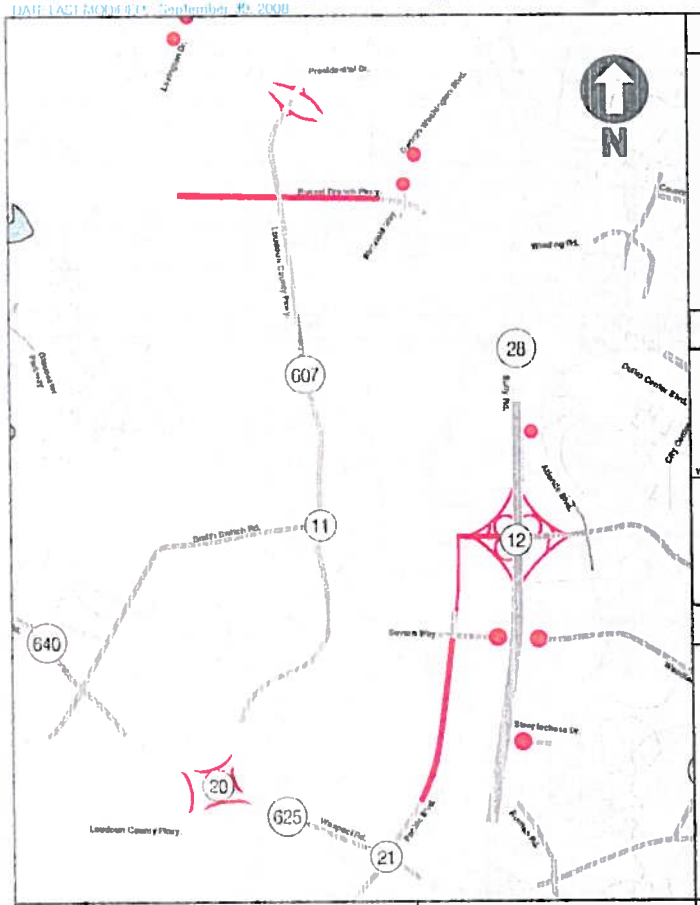

INTERSECTION 3	INTERSECTION 11	INTERSECTION 12	INTERSECTION 20
PLANNED INTERCHANGE	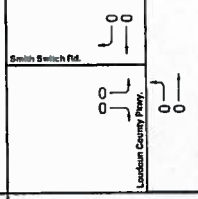	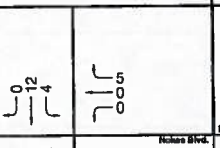	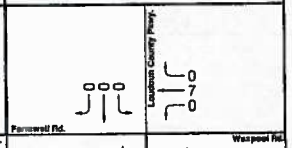
		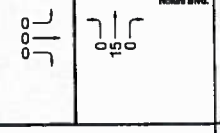	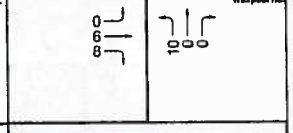

INTERSECTION 21	INTERSECTION 26	INTERSECTION 27	INTERSECTION 28
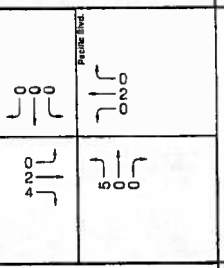	FOR FUTURE USE	FOR FUTURE USE	FOR FUTURE USE

INTERSECTION 29	INTERSECTION 30	INTERSECTION 31	INTERSECTION 32
FOR FUTURE USE	FOR FUTURE USE	FOR FUTURE USE	FOR FUTURE USE

LEGEND	INTERSECTION 33	INTERSECTION 34	INTERSECTION 35	INTERSECTION 36	INTERSECTION 37
Existing Roadway Network (2008) Planned/Recommended Roadway Network (2011) Peak Hour Traffic Volumes	FOR FUTURE USE	FOR FUTURE USE	FOR FUTURE USE	FOR FUTURE USE	FOR FUTURE USE

Appendix I-2B
Trips Generated by Background Development (2015)
Ashburn Executive Center (Office)

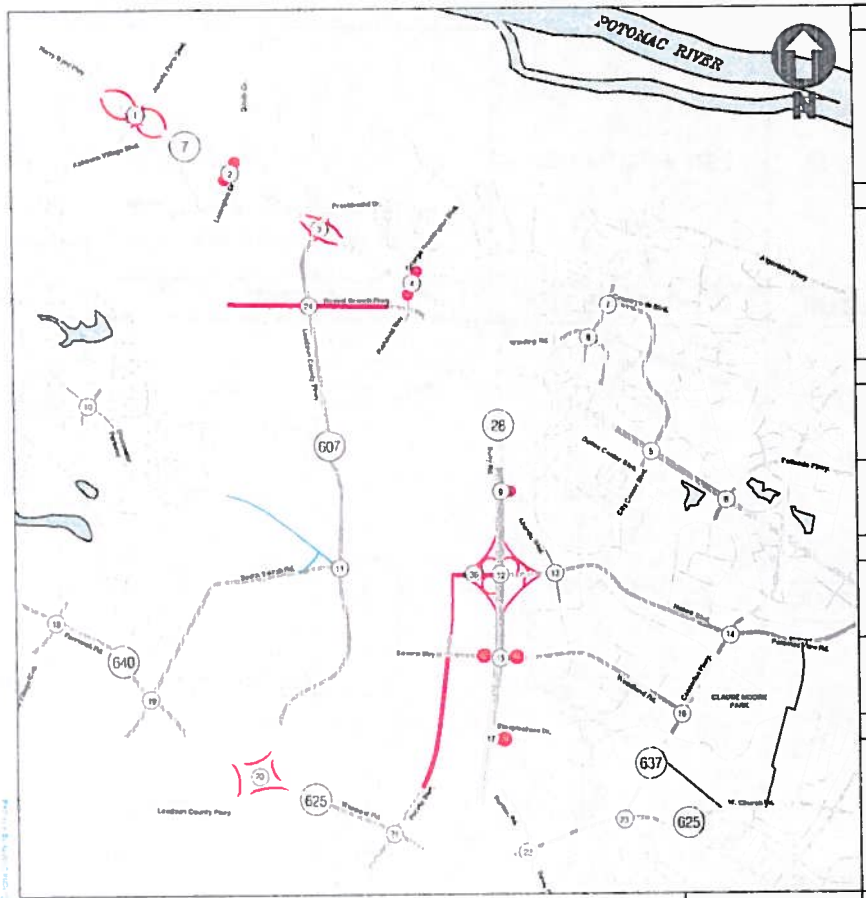

LEGEND
Existing Roadway Network (2009) Planned / Recommended Roadway Network (2011) Planned / Recommended Improvements Due Background Development (2015) AM/PM AM/PM AM/PM Peak Hour Traffic Volumes

INTERSECTION 1	INTERSECTION 2	INTERSECTION 3	INTERSECTION 4	INTERSECTION 5	INTERSECTION 6
REMOVE INTERSECTION	REMOVE INTERSECTION	REMOVE INTERSECTION	REMOVE INTERSECTION		
INTERSECTION 7	**INTERSECTION 8**	**INTERSECTION 9**	**INTERSECTION 10**	**INTERSECTION 11**	**INTERSECTION 12**
		REMOVE INTERSECTION			
INTERSECTION 13	**INTERSECTION 14**	**INTERSECTION 15**	**INTERSECTION 16**	**INTERSECTION 17**	**INTERSECTION 18**
		REMOVE INTERSECTION		REMOVE INTERSECTION	
INTERSECTION 19	**INTERSECTION 20**	**INTERSECTION 21**	**INTERSECTION 22**	**INTERSECTION 23**	**INTERSECTION 24**
INTERSECTION 25	**INTERSECTION 26**	**INTERSECTION 27**	**INTERSECTION 28**	**INTERSECTION 29**	**INTERSECTION 30**
FOR FUTURE USE	FOR FUTURE USE	FOR FUTURE USE	FOR FUTURE USE	FOR FUTURE USE	FOR FUTURE USE
INTERSECTION 31	**INTERSECTION 32**	**INTERSECTION 33**	**INTERSECTION 34**	**INTERSECTION 35**	**INTERSECTION 36**	**INTERSECTION 37**
FOR FUTURE USE	FOR FUTURE USE	FOR FUTURE USE	FOR FUTURE USE	FOR FUTURE USE		FOR FUTURE USE

Appendix I-3A
Trips Generated by Background Development (2015)
Beaumeade

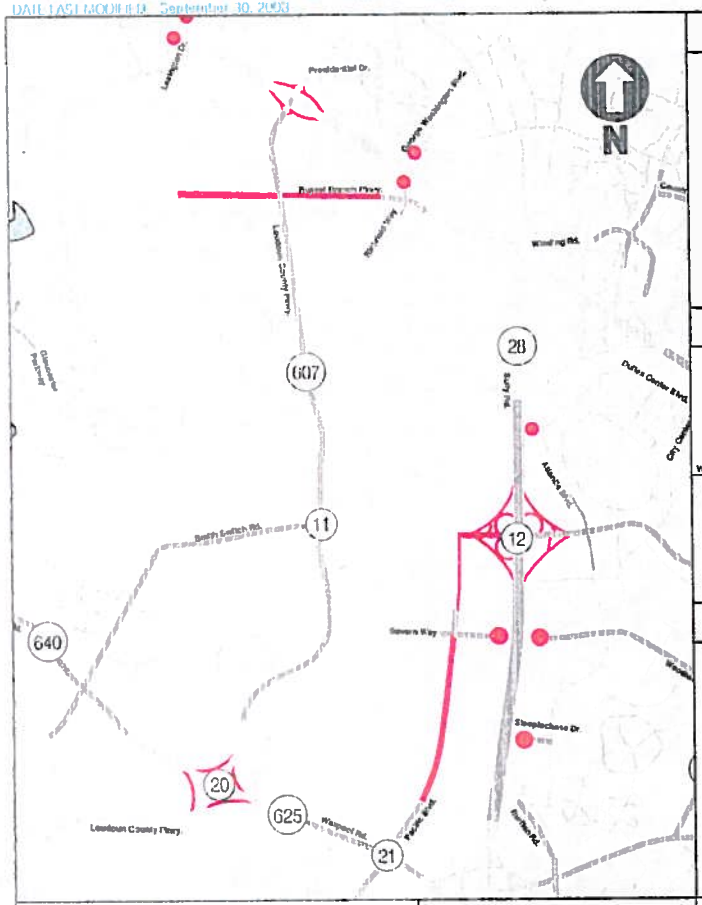

INTERSECTION 3	INTERSECTION 11	INTERSECTION 12	INTERSECTION 20
PLANNED INTERCHANGE	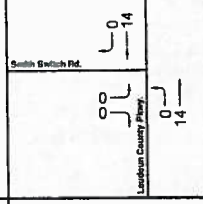	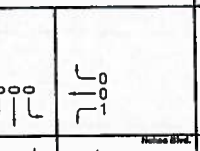	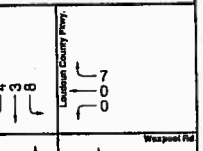

INTERSECTION 21	INTERSECTION 26	INTERSECTION 27	INTERSECTION 28
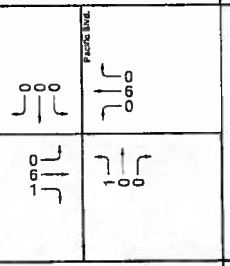	FOR FUTURE USE	FOR FUTURE USE	FOR FUTURE USE

INTERSECTION 29	INTERSECTION 30	INTERSECTION 31	INTERSECTION 32
FOR FUTURE USE	FOR FUTURE USE	FOR FUTURE USE	FOR FUTURE USE

LEGEND	INTERSECTION 33	INTERSECTION 34	INTERSECTION 35	INTERSECTION 36	INTERSECTION 37
Existing Roadway Network (2008) Planned/Recommended Roadway Network (2011) Peak Hour Traffic Volumes	FOR FUTURE USE	FOR FUTURE USE	FOR FUTURE USE	FOR FUTURE USE	FOR FUTURE USE

Appendix I-3B
Trips Generated by Background Development (2015)
Beaumeade

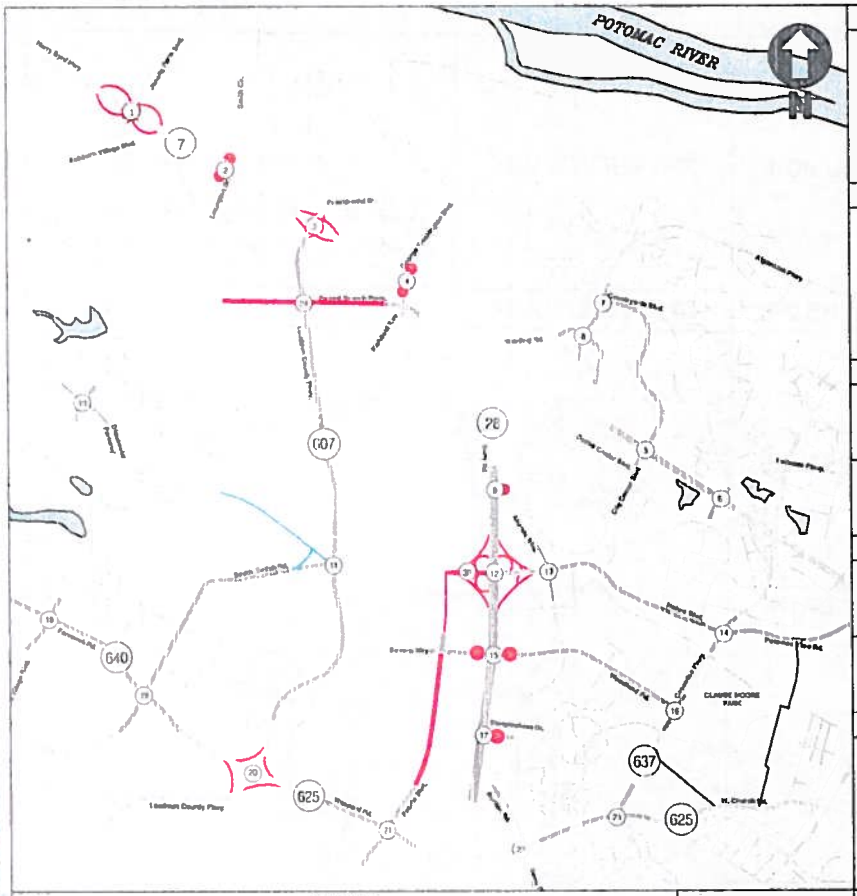

INTERSECTION 1	INTERSECTION 2	INTERSECTION 3	INTERSECTION 4	INTERSECTION 5	INTERSECTION 6
REMOVE INTERSECTION	REMOVE INTERSECTION	REMOVE INTERSECTION	REMOVE INTERSECTION		
INTERSECTION 7	**INTERSECTION 8**	**INTERSECTION 9**	**INTERSECTION 10**	**INTERSECTION 11**	**INTERSECTION 12**
		REMOVE INTERSECTION			
INTERSECTION 13	**INTERSECTION 14**	**INTERSECTION 15**	**INTERSECTION 16**	**INTERSECTION 17**	**INTERSECTION 18**
		REMOVE INTERSECTION		REMOVE INTERSECTION	
INTERSECTION 19	**INTERSECTION 20**	**INTERSECTION 21**	**INTERSECTION 22**	**INTERSECTION 23**	**INTERSECTION 24**
INTERSECTION 25	**INTERSECTION 26**	**INTERSECTION 27**	**INTERSECTION 28**	**INTERSECTION 29**	**INTERSECTION 30**
FOR FUTURE USE	FOR FUTURE USE	FOR FUTURE USE	FOR FUTURE USE	FOR FUTURE USE	FOR FUTURE USE
LEGEND	**INTERSECTION 31**	**INTERSECTION 32**	**INTERSECTION 33**	**INTERSECTION 34**	**INTERSECTION 35**	**INTERSECTION 36**	**INTERSECTION 37**
Existing Roadway Network (2008) Planned / Recommended Roadway Network (2015) Planned / Recommended Improvements Due Background Development (2015) Peak Hour Traffic Volumes	FOR FUTURE USE	FOR FUTURE USE	FOR FUTURE USE	FOR FUTURE USE	FOR FUTURE USE		FOR FUTURE USE

Appendix I-4A
Trips Generated by Background Development (2015)
Commonwealth Center

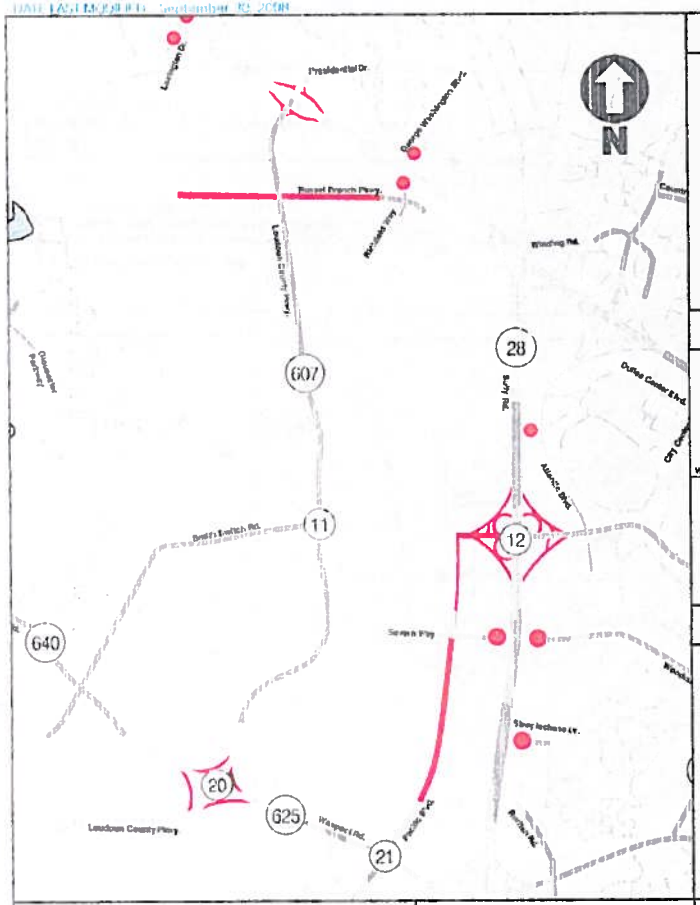

INTERSECTION 3	INTERSECTION 11	INTERSECTION 12	INTERSECTION 20
PLANNED INTERCHANGE	Smith Switch Rd. / Loudoun County Pkwy.	Nokes Blvd.	Farmwell Rd. / Loudoun County Pkwy. / Waxpool Rd.
INTERSECTION 21	INTERSECTION 26	INTERSECTION 27	INTERSECTION 28
Waxpool Rd. / Pacific Blvd.	FOR FUTURE USE	FOR FUTURE USE	FOR FUTURE USE
INTERSECTION 29	INTERSECTION 30	INTERSECTION 31	INTERSECTION 32
FOR FUTURE USE	FOR FUTURE USE	FOR FUTURE USE	FOR FUTURE USE
LEGEND	INTERSECTION 33	INTERSECTION 34	INTERSECTION 35	INTERSECTION 36	INTERSECTION 37
Existing Roadway Network (2008) Planned/Recommended Roadway Network (2011) Peak Hour Traffic Volumes	FOR FUTURE USE	FOR FUTURE USE	FOR FUTURE USE	FOR FUTURE USE	FOR FUTURE USE

Appendix I-4B
Trips Generated by Background Development (2015)
Commonwealth Center

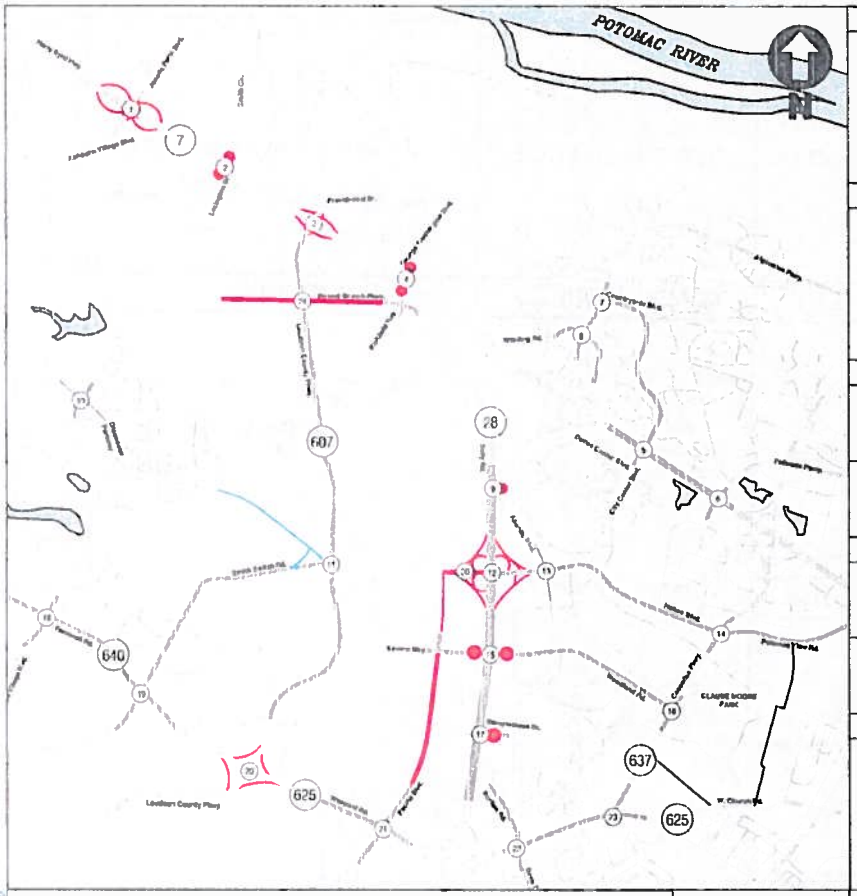

INTERSECTION 1	INTERSECTION 2	INTERSECTION 3	INTERSECTION 4	INTERSECTION 5	INTERSECTION 6
REMOVE INTERSECTION	REMOVE INTERSECTION	REMOVE INTERSECTION	REMOVE INTERSECTION		
INTERSECTION 7	**INTERSECTION 8**	**INTERSECTION 9**	**INTERSECTION 10**	**INTERSECTION 11**	**INTERSECTION 12**
		REMOVE INTERSECTION			
INTERSECTION 13	**INTERSECTION 14**	**INTERSECTION 15**	**INTERSECTION 16**	**INTERSECTION 17**	**INTERSECTION 18**
		REMOVE INTERSECTION		REMOVE INTERSECTION	
INTERSECTION 19	**INTERSECTION 20**	**INTERSECTION 21**	**INTERSECTION 22**	**INTERSECTION 23**	**INTERSECTION 24**
INTERSECTION 25	**INTERSECTION 26**	**INTERSECTION 27**	**INTERSECTION 28**	**INTERSECTION 29**	**INTERSECTION 30**
FOR FUTURE USE	FOR FUTURE USE	FOR FUTURE USE	FOR FUTURE USE	FOR FUTURE USE	FOR FUTURE USE
INTERSECTION 31	**INTERSECTION 32**	**INTERSECTION 33**	**INTERSECTION 34**	**INTERSECTION 35**	**INTERSECTION 36**	**INTERSECTION 37**
FOR FUTURE USE	FOR FUTURE USE	FOR FUTURE USE	FOR FUTURE USE	FOR FUTURE USE		FOR FUTURE USE

LEGEND

- Existing Roadway Network (2008)
- Planned / Recommended Roadway Network (2011)
- Planned / Recommended Improvements Due Background Development (2015)
- AM/PM — Peak Hour Traffic Volumes

Appendix I-5A
Trips Generated by Background Development (2015)
Lansdowne on the Potomac

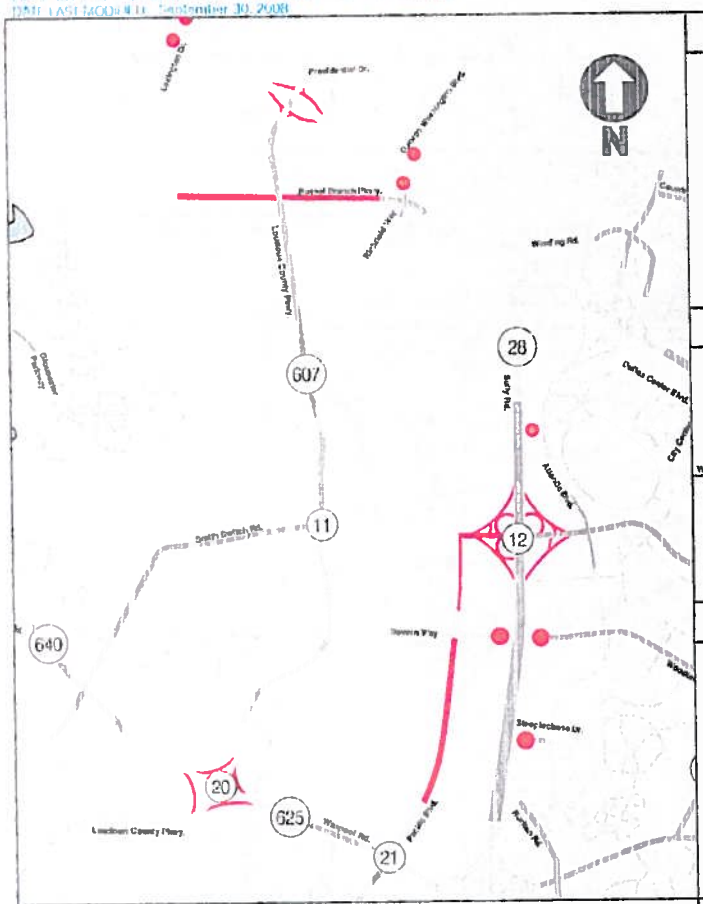

INTERSECTION 3	INTERSECTION 11	INTERSECTION 12	INTERSECTION 20
PLANNED INTERCHANGE	Smith Switch Rd.: 0 / 169; Loudoun County Pkwy.: 0 / 184	210 / 5; 6 / 0 / 0; Nokes Blvd.: 0 / 229 / 0	Farmwell Rd.: 88 / 80; Loudoun County Pkwy.: 87 / 0 / 0; Waxpool Rd.: 96 / 0

INTERSECTION 21	INTERSECTION 26	INTERSECTION 27	INTERSECTION 28
Waxpool Rd.: 0 / 5 / 74; Pacific Blvd.: 0 / 7 / 0; 80	FOR FUTURE USE	FOR FUTURE USE	FOR FUTURE USE

INTERSECTION 29	INTERSECTION 30	INTERSECTION 31	INTERSECTION 32
FOR FUTURE USE	FOR FUTURE USE	FOR FUTURE USE	FOR FUTURE USE

LEGEND	INTERSECTION 33	INTERSECTION 34	INTERSECTION 35	INTERSECTION 36	INTERSECTION 37
Existing Roadway Network (2006) Planned/Recommended Roadway Network (2011) SAT / SAT / SAT Peak Hour Traffic Volumes	FOR FUTURE USE	FOR FUTURE USE	FOR FUTURE USE	FOR FUTURE USE	FOR FUTURE USE

Appendix I-5B
Trips Generated by Background Development (2015)
Lansdowne on the Potomac

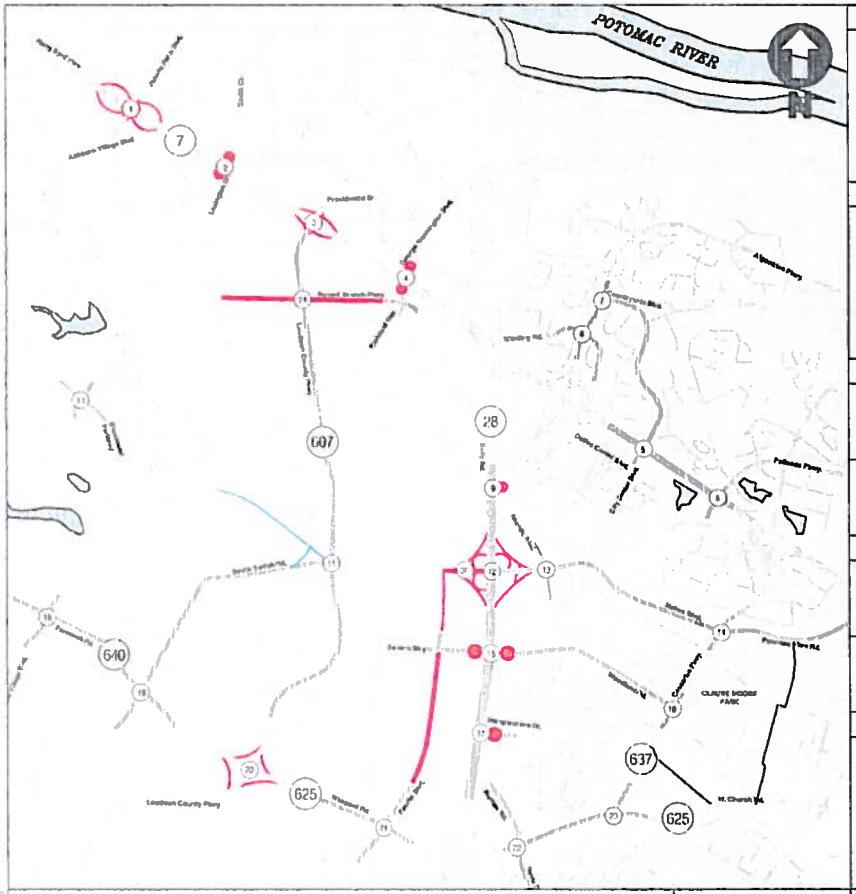

INTERSECTION 1	INTERSECTION 2	INTERSECTION 3	INTERSECTION 4	INTERSECTION 5	INTERSECTION 6
REMOVE INTERSECTION	REMOVE INTERSECTION	REMOVE INTERSECTION	REMOVE INTERSECTION		
INTERSECTION 7	**INTERSECTION 8**	**INTERSECTION 9**	**INTERSECTION 10**	**INTERSECTION 11**	**INTERSECTION 12**
		REMOVE INTERSECTION			
INTERSECTION 13	**INTERSECTION 14**	**INTERSECTION 15**	**INTERSECTION 16**	**INTERSECTION 17**	**INTERSECTION 18**
		REMOVE INTERSECTION		REMOVE INTERSECTION	
INTERSECTION 19	**INTERSECTION 20**	**INTERSECTION 21**	**INTERSECTION 22**	**INTERSECTION 23**	**INTERSECTION 24**
INTERSECTION 25	**INTERSECTION 26**	**INTERSECTION 27**	**INTERSECTION 28**	**INTERSECTION 29**	**INTERSECTION 30**
FOR FUTURE USE	FOR FUTURE USE	FOR FUTURE USE	FOR FUTURE USE	FOR FUTURE USE	FOR FUTURE USE
INTERSECTION 31	**INTERSECTION 32**	**INTERSECTION 33**	**INTERSECTION 34**	**INTERSECTION 35**	**INTERSECTION 36**	**INTERSECTION 37**
FOR FUTURE USE	FOR FUTURE USE	FOR FUTURE USE	FOR FUTURE USE	FOR FUTURE USE		FOR FUTURE USE

LEGEND

- Existing Roadway Network (2009)
- Planned / Recommended Roadway Network (2011)
- Planned / Recommended Improvements Due Background Development (2015)
- AM/PM / AM/PM / AM/PM — Peak Hour Traffic Volumes

Appendix I-6A
Trips Generated by Background Development (2015)
Loudoun Pointe

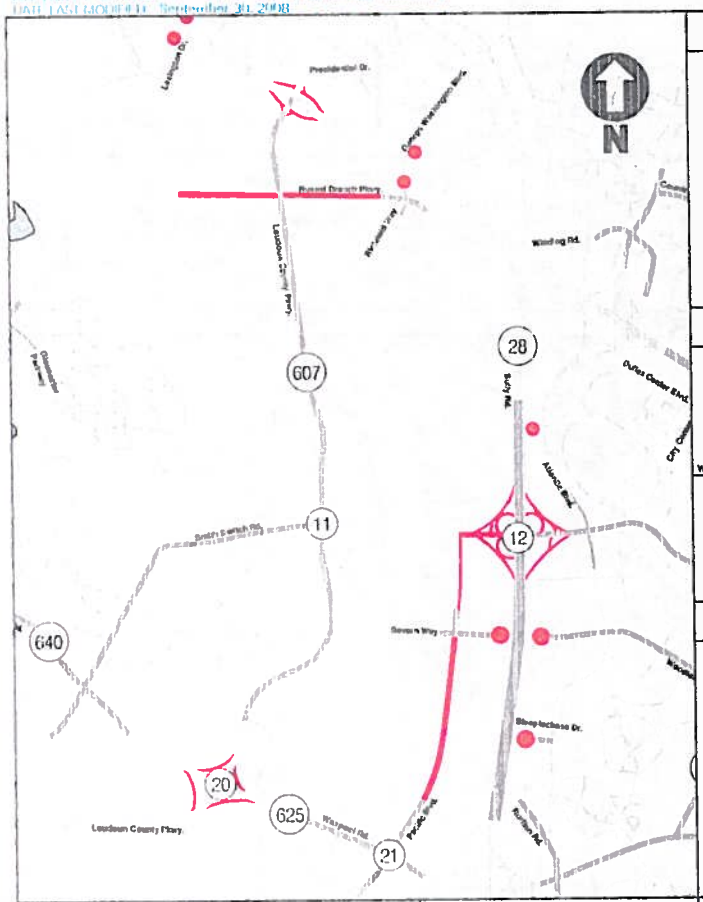

INTERSECTION 3	INTERSECTION 11	INTERSECTION 12	INTERSECTION 20
PLANNED INTERCHANGE	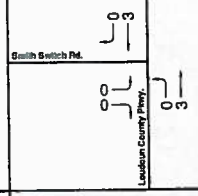	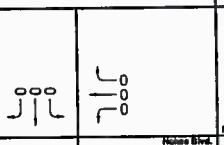	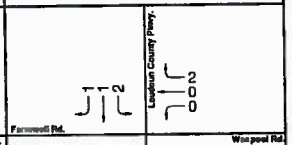
		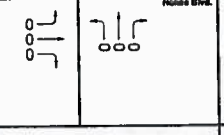	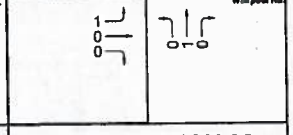

INTERSECTION 21	INTERSECTION 26	INTERSECTION 27	INTERSECTION 28
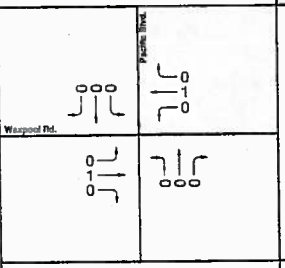	FOR FUTURE USE	FOR FUTURE USE	FOR FUTURE USE

INTERSECTION 29	INTERSECTION 30	INTERSECTION 31	INTERSECTION 32
FOR FUTURE USE	FOR FUTURE USE	FOR FUTURE USE	FOR FUTURE USE

LEGEND	INTERSECTION 33	INTERSECTION 34	INTERSECTION 35	INTERSECTION 36	INTERSECTION 37
Existing Roadway Network (2008) Planned/Recommended Roadway Network (2011) Peak Hour Traffic Volumes	FOR FUTURE USE	FOR FUTURE USE	FOR FUTURE USE	FOR FUTURE USE	FOR FUTURE USE

Appendix I-6B
Trips Generated by Background Development (2015)
Loudoun Pointe

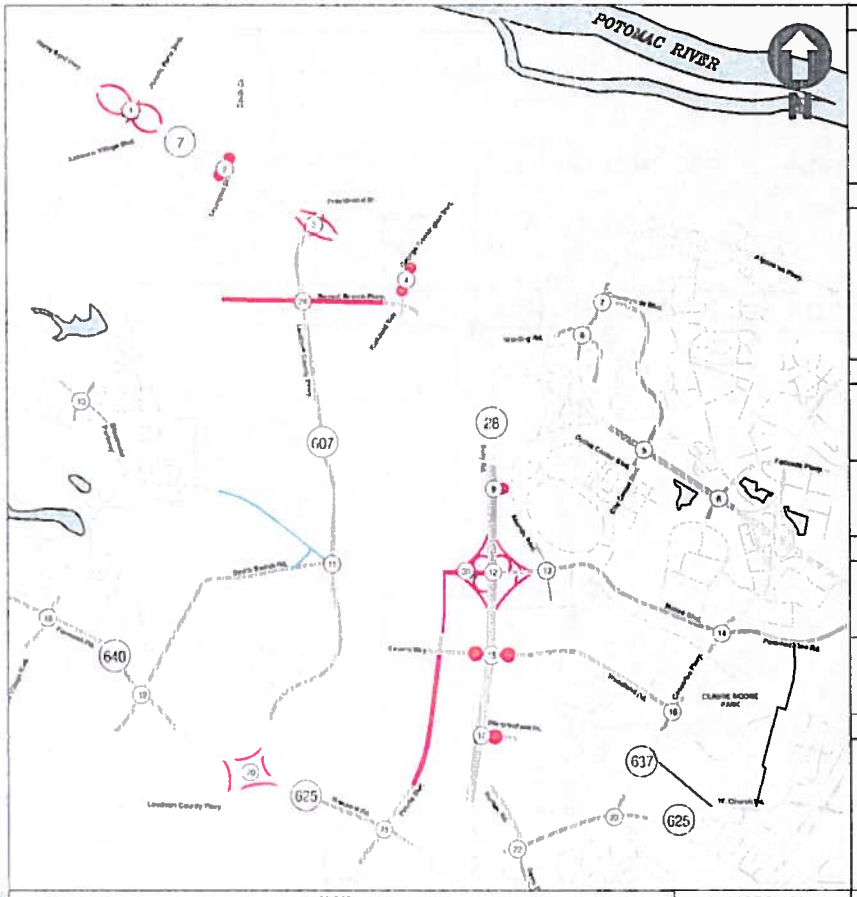

INTERSECTION 1	INTERSECTION 2	INTERSECTION 3	INTERSECTION 4	INTERSECTION 5	INTERSECTION 6
REMOVE INTERSECTION	REMOVE INTERSECTION	REMOVE INTERSECTION	REMOVE INTERSECTION		
INTERSECTION 7	**INTERSECTION 8**	**INTERSECTION 9**	**INTERSECTION 10**	**INTERSECTION 11**	**INTERSECTION 12**
		REMOVE INTERSECTION			
INTERSECTION 13	**INTERSECTION 14**	**INTERSECTION 15**	**INTERSECTION 16**	**INTERSECTION 17**	**INTERSECTION 18**
		REMOVE INTERSECTION		REMOVE INTERSECTION	
INTERSECTION 19	**INTERSECTION 20**	**INTERSECTION 21**	**INTERSECTION 22**	**INTERSECTION 23**	**INTERSECTION 24**
INTERSECTION 25	**INTERSECTION 26**	**INTERSECTION 27**	**INTERSECTION 28**	**INTERSECTION 29**	**INTERSECTION 30**
FOR FUTURE USE	FOR FUTURE USE	FOR FUTURE USE	FOR FUTURE USE	FOR FUTURE USE	FOR FUTURE USE

LEGEND	INTERSECTION 31	INTERSECTION 32	INTERSECTION 33	INTERSECTION 34	INTERSECTION 35	INTERSECTION 36	INTERSECTION 37
Existing Roadway Network (2009) Planned / Recommended Roadway Network (2011) Planned / Recommended Improvements Due Background Development (2015) AM/PM / AM/PM / AM/PM Peak Hour Traffic Volumes	FOR FUTURE USE	FOR FUTURE USE	FOR FUTURE USE	FOR FUTURE USE	FOR FUTURE USE		FOR FUTURE USE

Appendix I-7A
Trips Generated by Background Development (2015)
Ashburn Village Research Park

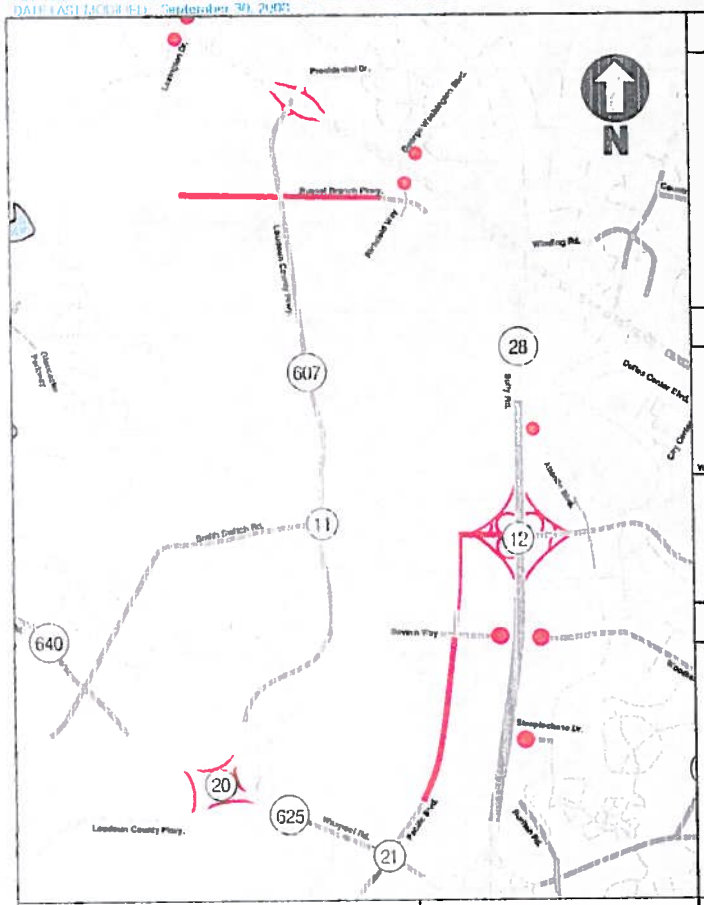

INTERSECTION 3	INTERSECTION 11	INTERSECTION 12	INTERSECTION 20
PLANNED INTERCHANGE	Smith Switch Rd. / Loudoun County Pkwy.	Nokes Blvd.	Farmwell Rd. / Loudoun County Pkwy. / Waxpool Rd.
INTERSECTION 21	INTERSECTION 26	INTERSECTION 27	INTERSECTION 28
Waxpool Rd. / Pacific Blvd.	FOR FUTURE USE	FOR FUTURE USE	FOR FUTURE USE
INTERSECTION 29	INTERSECTION 30	INTERSECTION 31	INTERSECTION 32
FOR FUTURE USE	FOR FUTURE USE	FOR FUTURE USE	FOR FUTURE USE
LEGEND	INTERSECTION 33	INTERSECTION 34	INTERSECTION 35	INTERSECTION 36	INTERSECTION 37
Existing Roadway Network (2008) Planned/Recommended Roadway Network (2011) Peak Hour Traffic Volumes	FOR FUTURE USE	FOR FUTURE USE	FOR FUTURE USE	FOR FUTURE USE	FOR FUTURE USE

Appendix I-7B
Trips Generated by Background Development (2015)
Ashburn Village Research Park

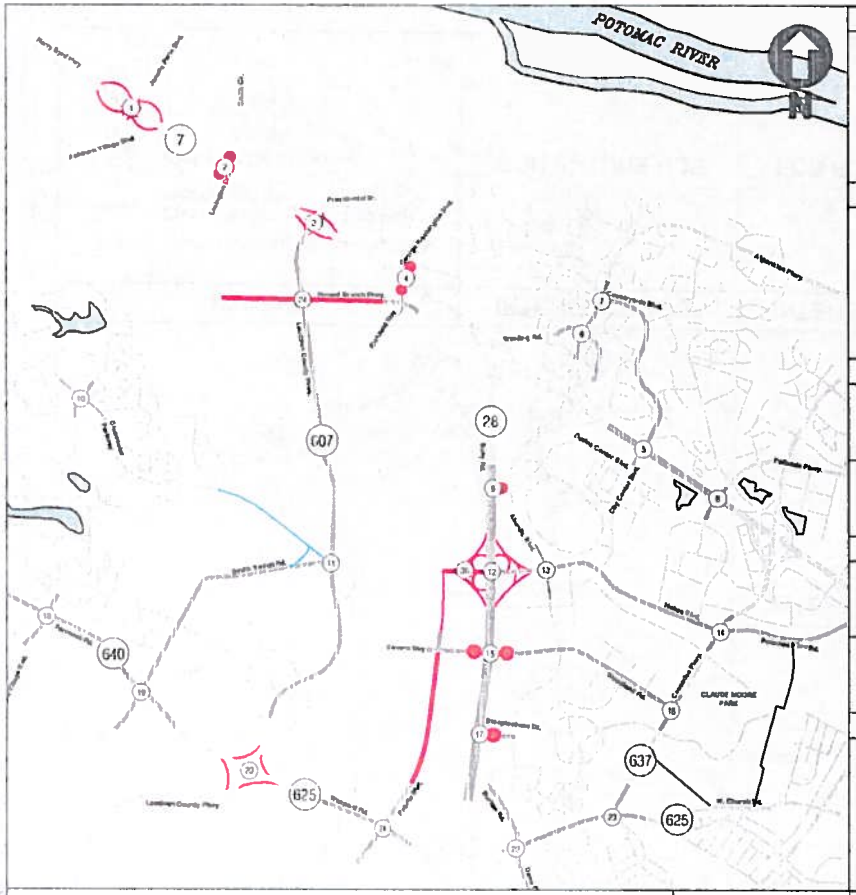

INTERSECTION 1	INTERSECTION 2	INTERSECTION 3	INTERSECTION 4	INTERSECTION 5	INTERSECTION 6
REMOVE INTERSECTION	REMOVE INTERSECTION	REMOVE INTERSECTION	REMOVE INTERSECTION		
INTERSECTION 7	**INTERSECTION 8**	**INTERSECTION 9**	**INTERSECTION 10**	**INTERSECTION 11**	**INTERSECTION 12**
		REMOVE INTERSECTION			
INTERSECTION 13	**INTERSECTION 14**	**INTERSECTION 15**	**INTERSECTION 16**	**INTERSECTION 17**	**INTERSECTION 18**
		REMOVE INTERSECTION		REMOVE INTERSECTION	
INTERSECTION 19	**INTERSECTION 20**	**INTERSECTION 21**	**INTERSECTION 22**	**INTERSECTION 23**	**INTERSECTION 24**
INTERSECTION 25	**INTERSECTION 26**	**INTERSECTION 27**	**INTERSECTION 28**	**INTERSECTION 29**	**INTERSECTION 30**
FOR FUTURE USE	FOR FUTURE USE	FOR FUTURE USE	FOR FUTURE USE	FOR FUTURE USE	FOR FUTURE USE
LEGEND	**INTERSECTION 31**	**INTERSECTION 32**	**INTERSECTION 33**	**INTERSECTION 34**	**INTERSECTION 35**	**INTERSECTION 36**	**INTERSECTION 37**
Existing Roadway Network (2009) Planned / Recommended Roadway Network (2011) Planned / Recommended Improvements Due Background Development (2015) AM/PM AM/PM AM/PM Peak Hour Traffic Volumes	FOR FUTURE USE	FOR FUTURE USE	FOR FUTURE USE	FOR FUTURE USE	FOR FUTURE USE		FOR FUTURE USE

Appendix I-8A
Trips Generated by Background Development (2015)
Dulles Town Center

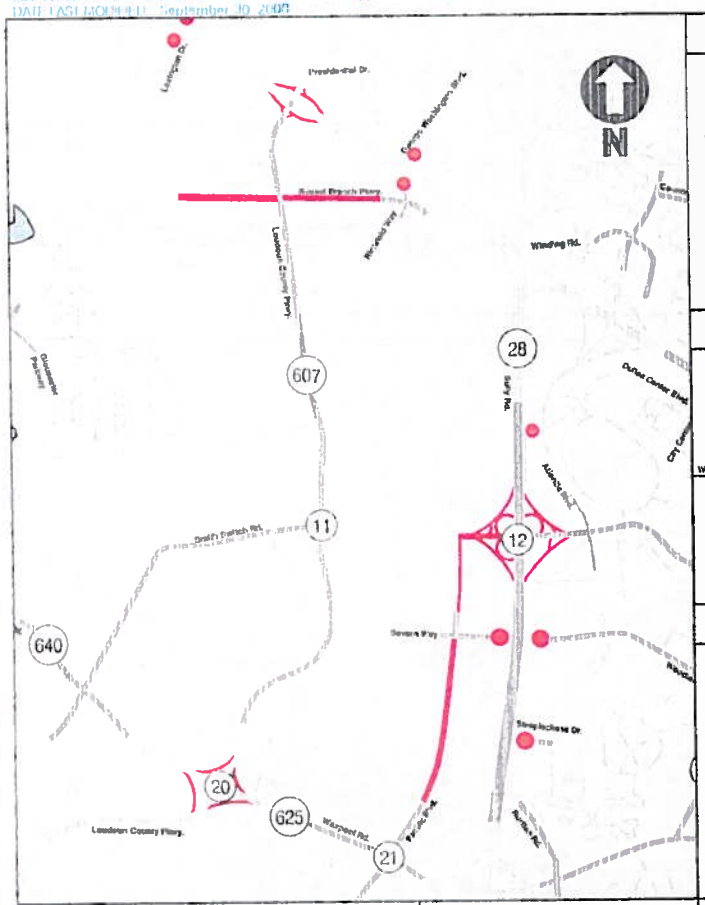

INTERSECTION 3	INTERSECTION 11	INTERSECTION 12	INTERSECTION 20
PLANNED INTERCHANGE	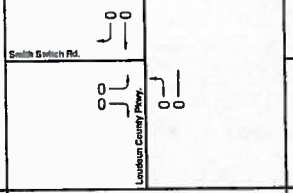	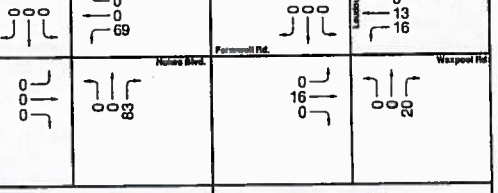	

INTERSECTION 21	INTERSECTION 26	INTERSECTION 27	INTERSECTION 28
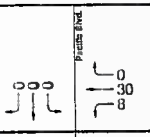	FOR FUTURE USE	FOR FUTURE USE	FOR FUTURE USE

INTERSECTION 29	INTERSECTION 30	INTERSECTION 31	INTERSECTION 32
FOR FUTURE USE	FOR FUTURE USE	FOR FUTURE USE	FOR FUTURE USE

LEGEND	INTERSECTION 33	INTERSECTION 34	INTERSECTION 35	INTERSECTION 36	INTERSECTION 37
Existing Roadway Network (2008) Planned/Recommended Roadway Network (2011) Peak Hour Traffic Volumes	FOR FUTURE USE	FOR FUTURE USE	FOR FUTURE USE	FOR FUTURE USE	FOR FUTURE USE

Appendix I-8B
Trips Generated by Background Development (2015)
Dulles Town Center

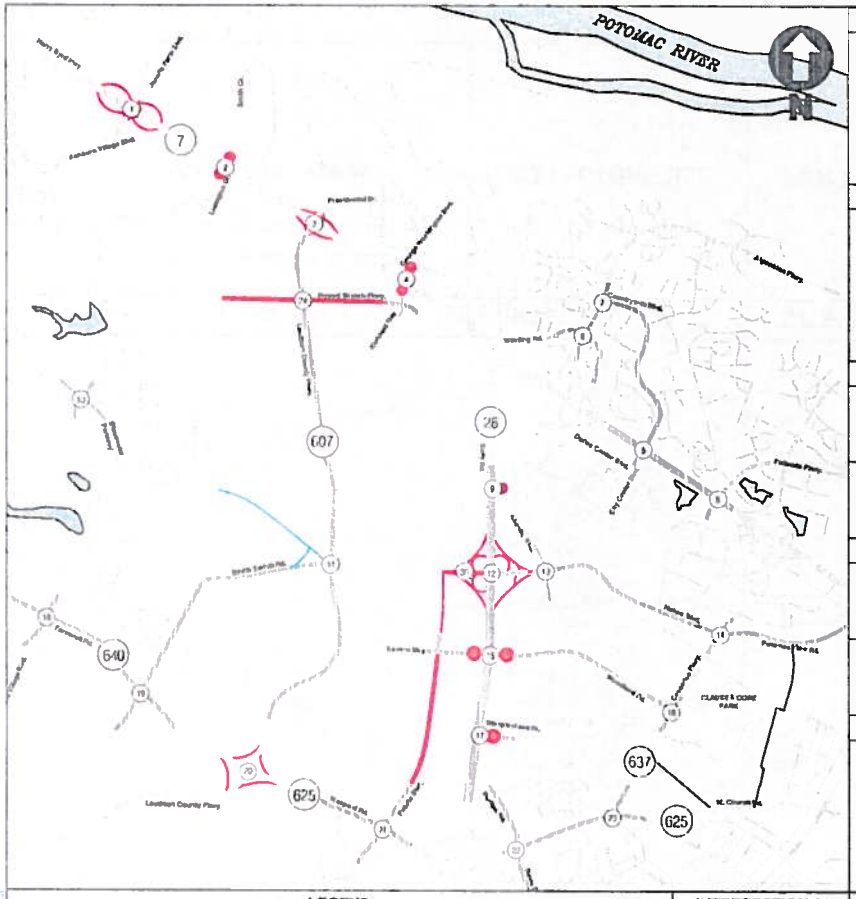

INTERSECTION 1	INTERSECTION 2	INTERSECTION 3	INTERSECTION 4	INTERSECTION 5	INTERSECTION 6
REMOVE INTERSECTION	REMOVE INTERSECTION	REMOVE INTERSECTION	REMOVE INTERSECTION		
INTERSECTION 7	**INTERSECTION 8**	**INTERSECTION 9**	**INTERSECTION 10**	**INTERSECTION 11**	**INTERSECTION 12**
		REMOVE INTERSECTION			
INTERSECTION 13	**INTERSECTION 14**	**INTERSECTION 15**	**INTERSECTION 16**	**INTERSECTION 17**	**INTERSECTION 18**
		REMOVE INTERSECTION		REMOVE INTERSECTION	
INTERSECTION 19	**INTERSECTION 20**	**INTERSECTION 21**	**INTERSECTION 22**	**INTERSECTION 23**	**INTERSECTION 24**
INTERSECTION 25	**INTERSECTION 26**	**INTERSECTION 27**	**INTERSECTION 28**	**INTERSECTION 29**	**INTERSECTION 30**
FOR FUTURE USE	FOR FUTURE USE	FOR FUTURE USE	FOR FUTURE USE	FOR FUTURE USE	FOR FUTURE USE

LEGEND	INTERSECTION 31	INTERSECTION 32	INTERSECTION 33	INTERSECTION 34	INTERSECTION 35	INTERSECTION 36	INTERSECTION 37
Existing Roadway Network (2008) Planned / Recommended Roadway Network (2011) Planned / Recommended Improvements Due Background Development (2015) AM/PM AM/PM AM/PM Peak Hour Traffic Volumes	FOR FUTURE USE	FOR FUTURE USE	FOR FUTURE USE	FOR FUTURE USE	FOR FUTURE USE		FOR FUTURE USE

Appendix I-9A
Trips Generated by Background Development (2015)
Erickson at Ashburn

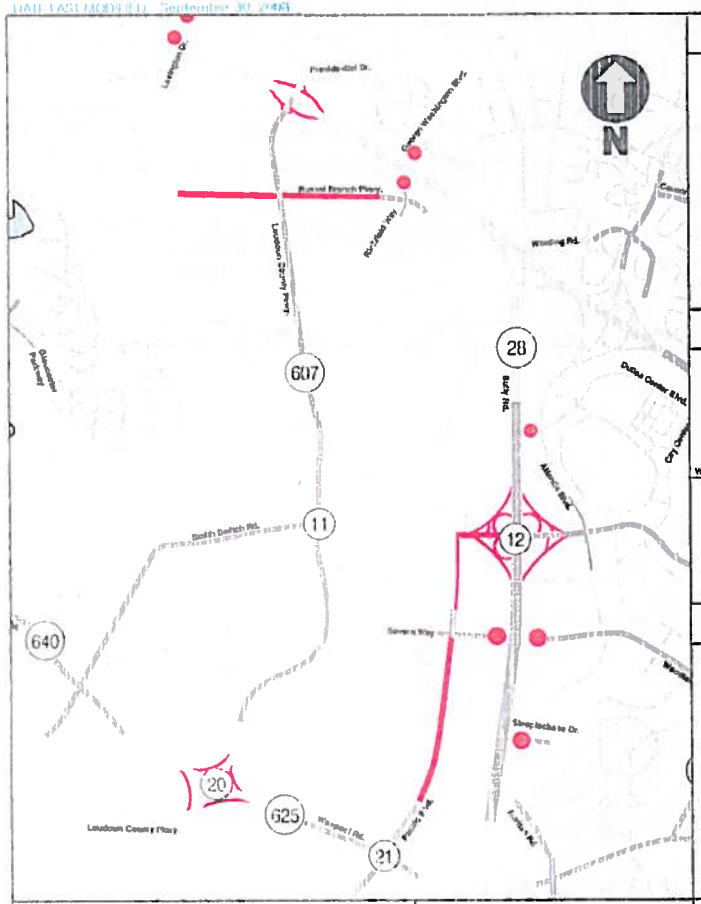

INTERSECTION 3	INTERSECTION 11	INTERSECTION 12	INTERSECTION 20
PLANNED INTERCHANGE	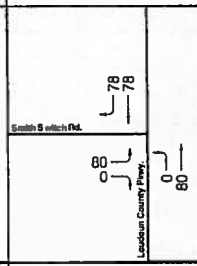	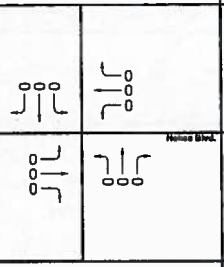	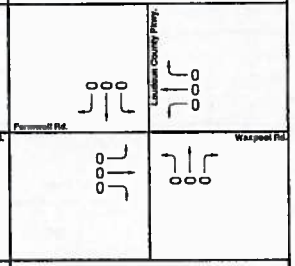
INTERSECTION 21	**INTERSECTION 26**	**INTERSECTION 27**	**INTERSECTION 28**
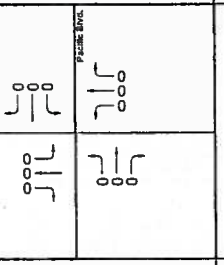	FOR FUTURE USE	FOR FUTURE USE	FOR FUTURE USE
INTERSECTION 29	**INTERSECTION 30**	**INTERSECTION 31**	**INTERSECTION 32**
FOR FUTURE USE	FOR FUTURE USE	FOR FUTURE USE	FOR FUTURE USE
LEGEND	**INTERSECTION 33**	**INTERSECTION 34**	**INTERSECTION 35**	**INTERSECTION 36**	**INTERSECTION 37**
Existing Roadway Network (2008) Planned/Recommended Roadway Network (2011) Peak Hour Traffic Volumes	FOR FUTURE USE	FOR FUTURE USE	FOR FUTURE USE	FOR FUTURE USE	FOR FUTURE USE

Appendix I-9B
Trips Generated by Background Development (2015)
Erickson at Ashburn

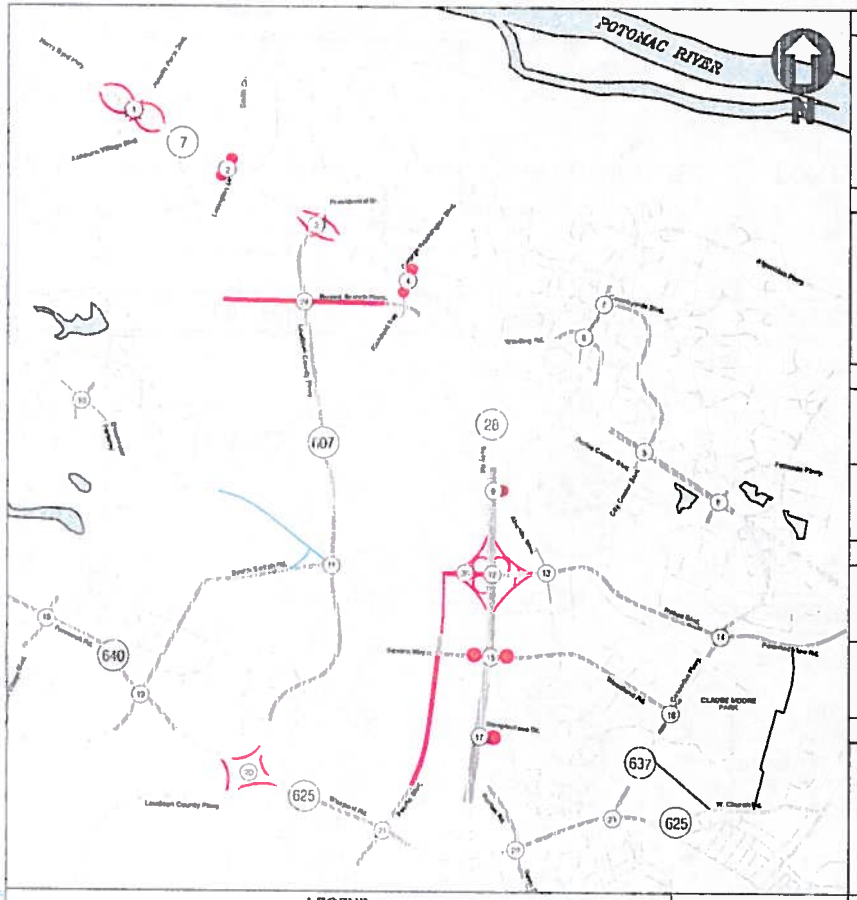

INTERSECTION 1	INTERSECTION 2	INTERSECTION 3	INTERSECTION 4	INTERSECTION 5	INTERSECTION 6
REMOVE INTERSECTION	REMOVE INTERSECTION	REMOVE INTERSECTION	REMOVE INTERSECTION		
INTERSECTION 7	**INTERSECTION 8**	**INTERSECTION 9**	**INTERSECTION 10**	**INTERSECTION 11**	**INTERSECTION 12**
		REMOVE INTERSECTION			
INTERSECTION 13	**INTERSECTION 14**	**INTERSECTION 15**	**INTERSECTION 16**	**INTERSECTION 17**	**INTERSECTION 18**
		REMOVE INTERSECTION		REMOVE INTERSECTION	
INTERSECTION 19	**INTERSECTION 20**	**INTERSECTION 21**	**INTERSECTION 22**	**INTERSECTION 23**	**INTERSECTION 24**
INTERSECTION 25	**INTERSECTION 26**	**INTERSECTION 27**	**INTERSECTION 28**	**INTERSECTION 29**	**INTERSECTION 30**
FOR FUTURE USE	FOR FUTURE USE	FOR FUTURE USE	FOR FUTURE USE	FOR FUTURE USE	FOR FUTURE USE
LEGEND	**INTERSECTION 31**	**INTERSECTION 32**	**INTERSECTION 33**	**INTERSECTION 34**	**INTERSECTION 35**	**INTERSECTION 36**	**INTERSECTION 37**
Existing Roadway Network (2008) Planned / Recommended Roadway Network (2011) Planned / Recommended Improvements Due Background Development (2015) AM/PM / AM/PM / AM/PM Peak Hour Traffic Volumes	FOR FUTURE USE	FOR FUTURE USE	FOR FUTURE USE	FOR FUTURE USE	FOR FUTURE USE		FOR FUTURE USE

Appendix I-10A
Trips Generated by Background Development (2015)
University Center

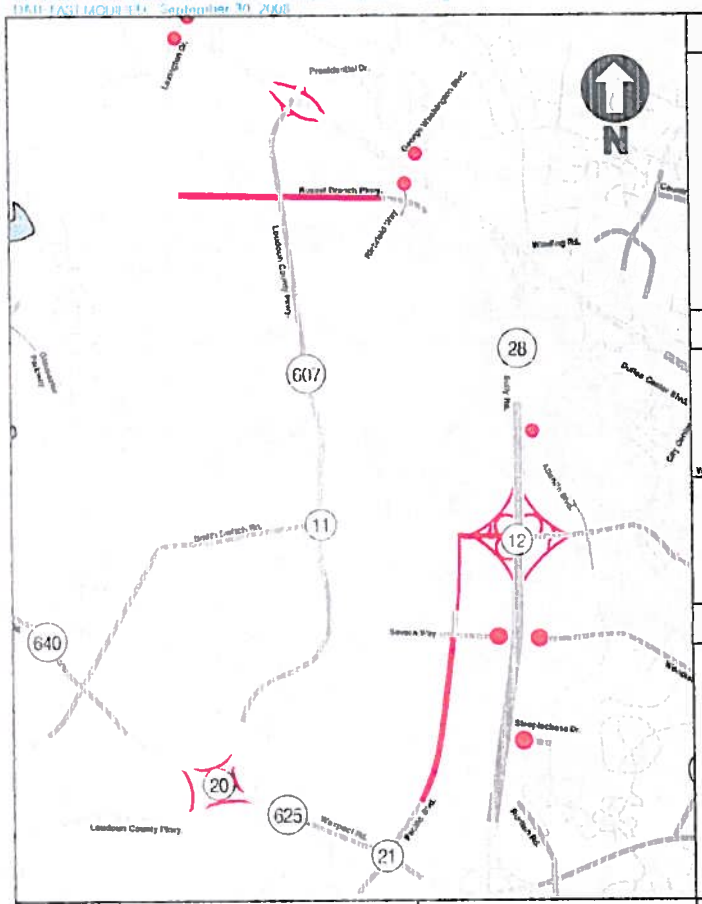

INTERSECTION 3	INTERSECTION 11	INTERSECTION 12	INTERSECTION 20
PLANNED INTERCHANGE	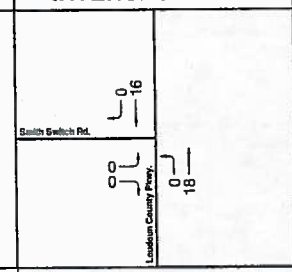	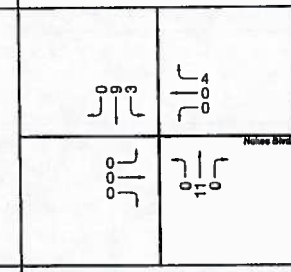	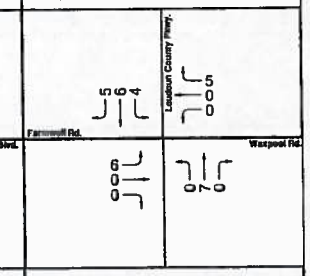

INTERSECTION 21	INTERSECTION 26	INTERSECTION 27	INTERSECTION 28
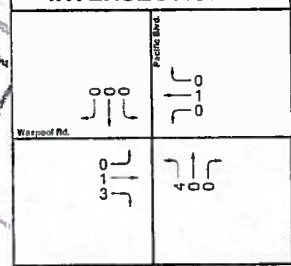	FOR FUTURE USE	FOR FUTURE USE	FOR FUTURE USE

INTERSECTION 29	INTERSECTION 30	INTERSECTION 31	INTERSECTION 32
FOR FUTURE USE	FOR FUTURE USE	FOR FUTURE USE	FOR FUTURE USE

LEGEND	INTERSECTION 33	INTERSECTION 34	INTERSECTION 35	INTERSECTION 36	INTERSECTION 37
Existing Roadway Network (2008) Planned/Recommended Roadway Network (2011) Peak Hour Traffic Volumes	FOR FUTURE USE	FOR FUTURE USE	FOR FUTURE USE	FOR FUTURE USE	FOR FUTURE USE

Appendix I-10B
Trips Generated by Background Development (2015)
University Center

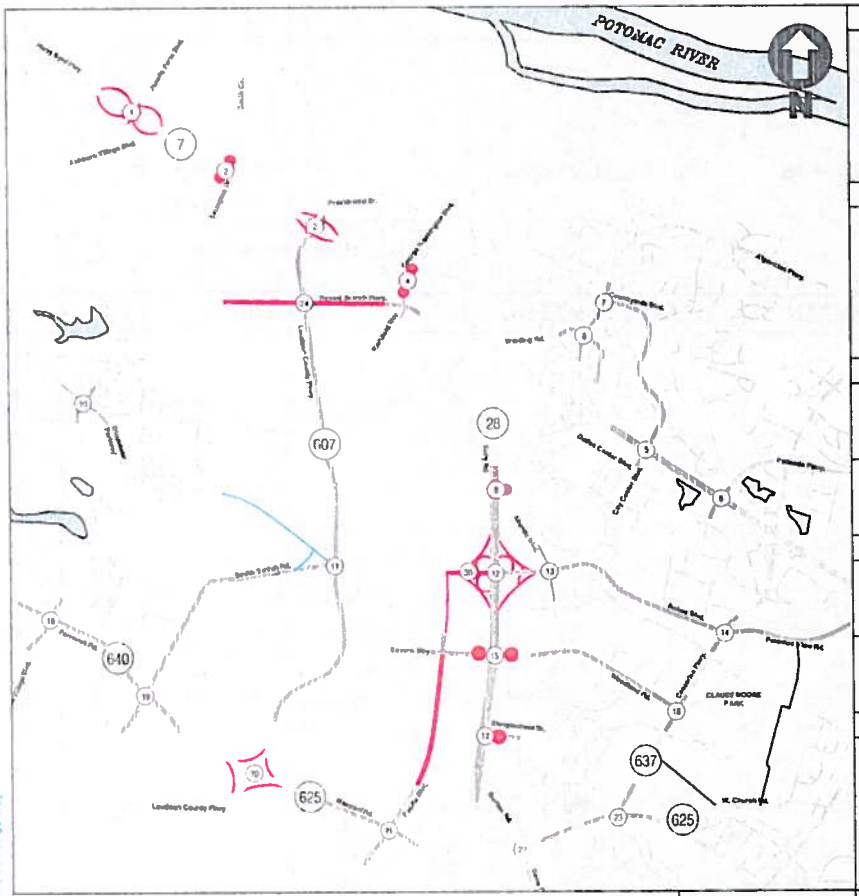

INTERSECTION 1	INTERSECTION 2	INTERSECTION 3	INTERSECTION 4	INTERSECTION 5	INTERSECTION 6
REMOVE INTERSECTION	REMOVE INTERSECTION	REMOVE INTERSECTION	REMOVE INTERSECTION		
INTERSECTION 7	**INTERSECTION 8**	**INTERSECTION 9**	**INTERSECTION 10**	**INTERSECTION 11**	**INTERSECTION 12**
		REMOVE INTERSECTION			
INTERSECTION 13	**INTERSECTION 14**	**INTERSECTION 15**	**INTERSECTION 16**	**INTERSECTION 17**	**INTERSECTION 18**
		REMOVE INTERSECTION		REMOVE INTERSECTION	
INTERSECTION 19	**INTERSECTION 20**	**INTERSECTION 21**	**INTERSECTION 22**	**INTERSECTION 23**	**INTERSECTION 24**
INTERSECTION 25	**INTERSECTION 26**	**INTERSECTION 27**	**INTERSECTION 28**	**INTERSECTION 29**	**INTERSECTION 30**
FOR FUTURE USE	FOR FUTURE USE	FOR FUTURE USE	FOR FUTURE USE	FOR FUTURE USE	FOR FUTURE USE
INTERSECTION 31	**INTERSECTION 32**	**INTERSECTION 33**	**INTERSECTION 34**	**INTERSECTION 35**	**INTERSECTION 36**	**INTERSECTION 37**
FOR FUTURE USE	FOR FUTURE USE	FOR FUTURE USE	FOR FUTURE USE	FOR FUTURE USE		FOR FUTURE USE

LEGEND

- Existing Roadway Network (2003)
- Planned / Recommended Roadway Network (2011)
- Planned / Recommended Improvements Due Background Development (2015)
- Peak Hour Traffic Volumes

Appendix I-11A
Trips Generated by Background Development (2015)
Potomac Farms Business

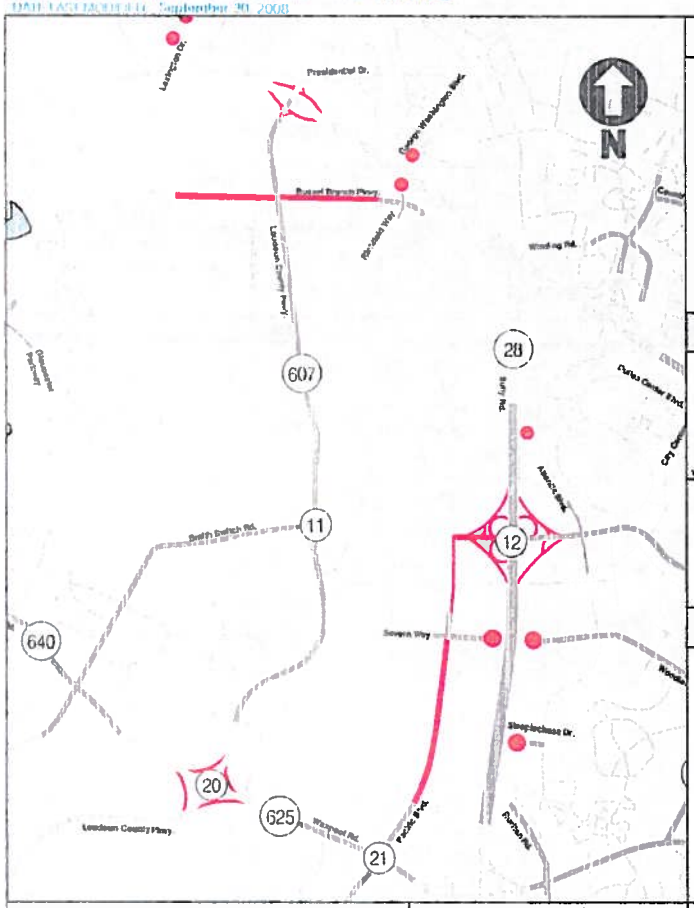

INTERSECTION 3	INTERSECTION 11	INTERSECTION 12	INTERSECTION 20
PLANNED INTERCHANGE	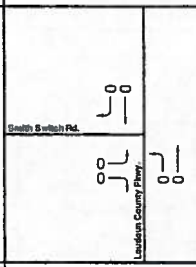	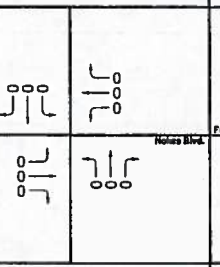	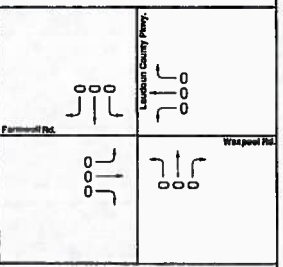

INTERSECTION 21	INTERSECTION 26	INTERSECTION 27	INTERSECTION 28
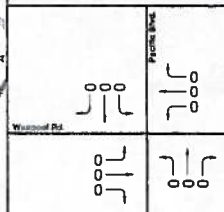	FOR FUTURE USE	FOR FUTURE USE	FOR FUTURE USE

INTERSECTION 29	INTERSECTION 30	INTERSECTION 31	INTERSECTION 32
FOR FUTURE USE	FOR FUTURE USE	FOR FUTURE USE	FOR FUTURE USE

LEGEND	INTERSECTION 33	INTERSECTION 34	INTERSECTION 35	INTERSECTION 36	INTERSECTION 37
Existing Roadway Network (2008) Planned/Recommended Roadway Network (2011) Peak Hour Traffic Volumes	FOR FUTURE USE	FOR FUTURE USE	FOR FUTURE USE	FOR FUTURE USE	FOR FUTURE USE

Appendix I-11B
Trips Generated by Background Development (2015)
Potomac Farms Business

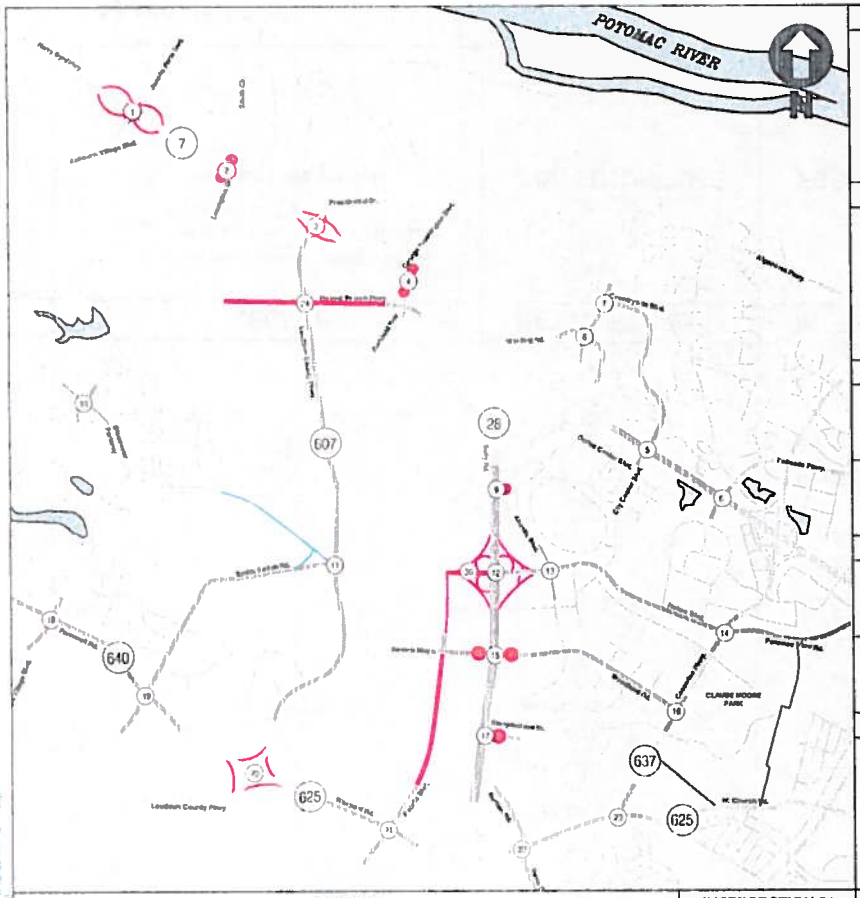

INTERSECTION 1	INTERSECTION 2	INTERSECTION 3	INTERSECTION 4	INTERSECTION 5	INTERSECTION 6
REMOVE INTERSECTION	REMOVE INTERSECTION	REMOVE INTERSECTION	REMOVE INTERSECTION		
INTERSECTION 7	**INTERSECTION 8**	**INTERSECTION 9**	**INTERSECTION 10**	**INTERSECTION 11**	**INTERSECTION 12**
		REMOVE INTERSECTION			
INTERSECTION 13	**INTERSECTION 14**	**INTERSECTION 15**	**INTERSECTION 16**	**INTERSECTION 17**	**INTERSECTION 18**
		REMOVE INTERSECTION		REMOVE INTERSECTION	
INTERSECTION 19	**INTERSECTION 20**	**INTERSECTION 21**	**INTERSECTION 22**	**INTERSECTION 23**	**INTERSECTION 24**
INTERSECTION 25	**INTERSECTION 26**	**INTERSECTION 27**	**INTERSECTION 28**	**INTERSECTION 29**	**INTERSECTION 30**
FOR FUTURE USE	FOR FUTURE USE	FOR FUTURE USE	FOR FUTURE USE	FOR FUTURE USE	FOR FUTURE USE

LEGEND	INTERSECTION 31	INTERSECTION 32	INTERSECTION 33	INTERSECTION 34	INTERSECTION 35	INTERSECTION 36	INTERSECTION 37
Existing Roadway Network (2003) Planned / Recommended Roadway Network (2011) Planned / Recommended Improvements Due Background Development (2015) AM/PM AM/PM AM/PM Peak Hour Traffic Volumes	FOR FUTURE USE	FOR FUTURE USE	FOR FUTURE USE	FOR FUTURE USE	FOR FUTURE USE		FOR FUTURE USE

Appendix I-12A
Trips Generated by Background Development (2015)
One Loudoun Community

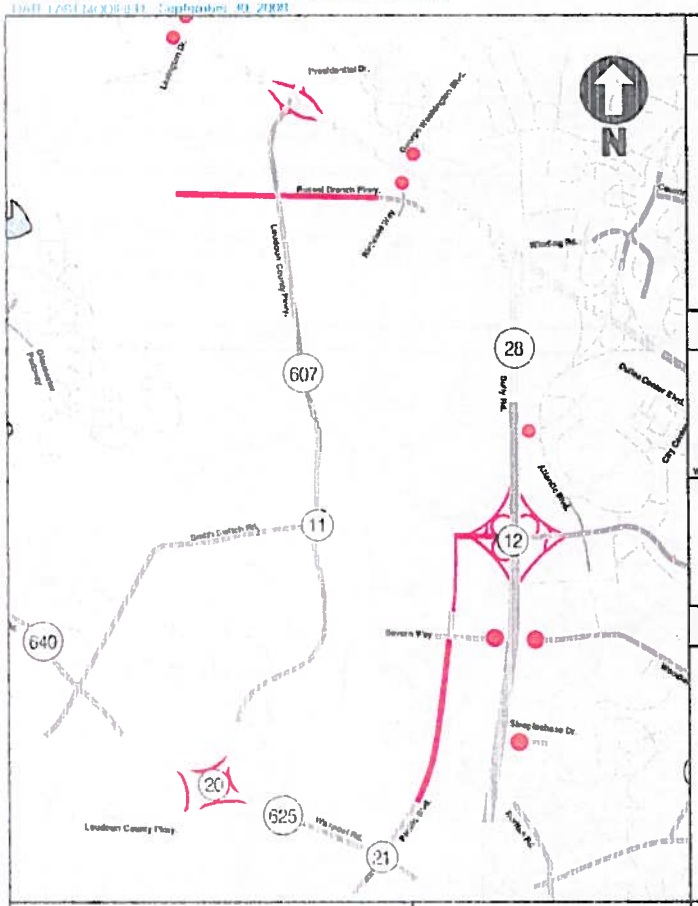

INTERSECTION 3	INTERSECTION 11	INTERSECTION 12	INTERSECTION 20
PLANNED INTERCHANGE	Smith Switch Rd.: 9 — 332; Loudoun County Pkwy.: 11 — 0; 0 — 421	0 0 0; 0 — 0 — 0	Farmwell Rd.: 8 — 211 — 201; Loudoun County Pkwy.: 165 — 0 — 0; 0 0 0; Waxpool Rd.: 0 — 200 — 0
INTERSECTION 21	**INTERSECTION 26**	**INTERSECTION 27**	**INTERSECTION 28**
Waxpool Rd.: 0 — 201 — 0; Pacific Blvd.: 0 — 165 — 0	FOR FUTURE USE	FOR FUTURE USE	FOR FUTURE USE
INTERSECTION 29	**INTERSECTION 30**	**INTERSECTION 31**	**INTERSECTION 32**
FOR FUTURE USE	FOR FUTURE USE	FOR FUTURE USE	FOR FUTURE USE
LEGEND	**INTERSECTION 33**	**INTERSECTION 34**	**INTERSECTION 35**	**INTERSECTION 36**	**INTERSECTION 37**
Existing Roadway Network (2008) Planned/Recommended Roadway Network (2011) Peak Hour Traffic Volumes	FOR FUTURE USE	FOR FUTURE USE	FOR FUTURE USE	FOR FUTURE USE	FOR FUTURE USE

Appendix I-12B
Trips Generated by Background Development (2015)
One Loudoun Community

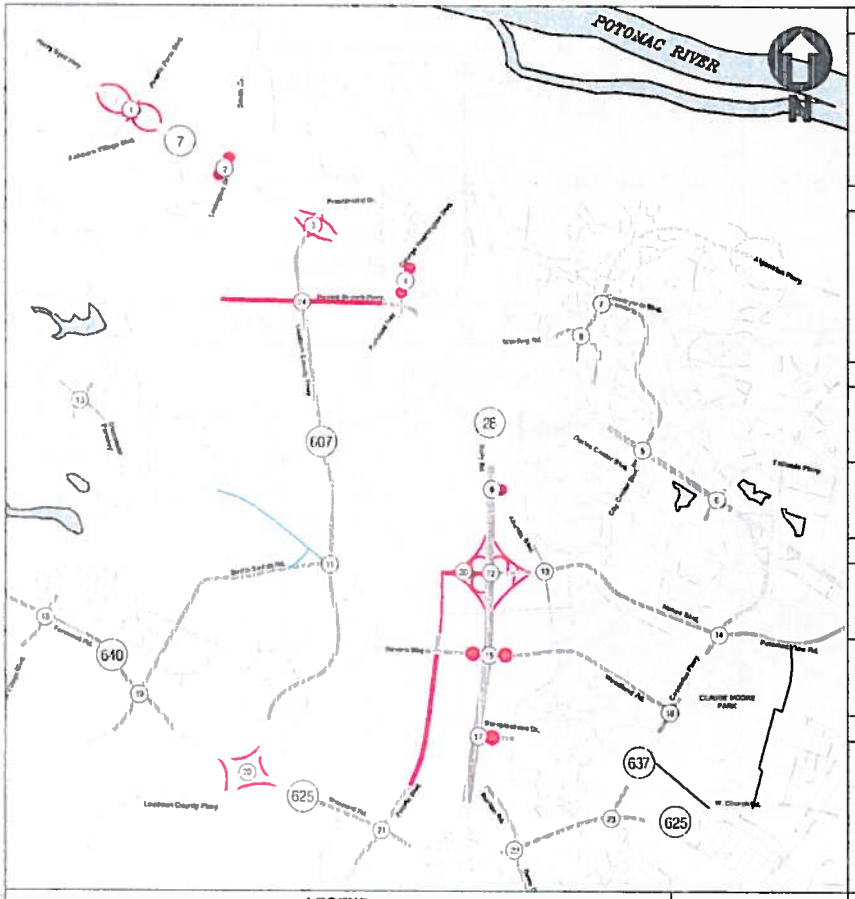

INTERSECTION 1	INTERSECTION 2	INTERSECTION 3	INTERSECTION 4	INTERSECTION 5	INTERSECTION 6
REMOVE INTERSECTION	REMOVE INTERSECTION	REMOVE INTERSECTION	REMOVE INTERSECTION		
INTERSECTION 7	**INTERSECTION 8**	**INTERSECTION 9**	**INTERSECTION 10**	**INTERSECTION 11**	**INTERSECTION 12**
		REMOVE INTERSECTION			
INTERSECTION 13	**INTERSECTION 14**	**INTERSECTION 15**	**INTERSECTION 16**	**INTERSECTION 17**	**INTERSECTION 18**
		REMOVE INTERSECTION		REMOVE INTERSECTION	
INTERSECTION 19	**INTERSECTION 20**	**INTERSECTION 21**	**INTERSECTION 22**	**INTERSECTION 23**	**INTERSECTION 24**
INTERSECTION 25	**INTERSECTION 26**	**INTERSECTION 27**	**INTERSECTION 28**	**INTERSECTION 29**	**INTERSECTION 30**
FOR FUTURE USE	FOR FUTURE USE	FOR FUTURE USE	FOR FUTURE USE	FOR FUTURE USE	FOR FUTURE USE

LEGEND	INTERSECTION 31	INTERSECTION 32	INTERSECTION 33	INTERSECTION 34	INTERSECTION 35	INTERSECTION 36	INTERSECTION 37
Existing Roadway Network (2008) Planned / Recommended Roadway Network (2011) Planned / Recommended Improvements Due Background Development (2015) AM/PM AM/PM AM/PM Peak Hour Traffic Volumes	FOR FUTURE USE	FOR FUTURE USE	FOR FUTURE USE	FOR FUTURE USE	FOR FUTURE USE		FOR FUTURE USE

Appendix I-13A
Trips Generated by Background Development (2015)
Potomac Green

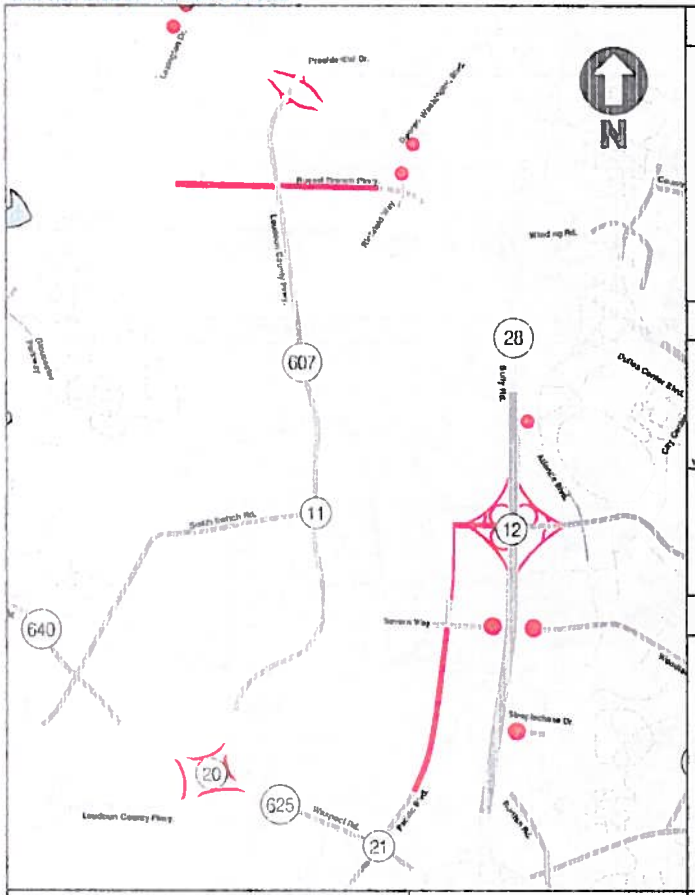

INTERSECTION 3	INTERSECTION 11	INTERSECTION 12	INTERSECTION 20
PLANNED INTERCHANGE	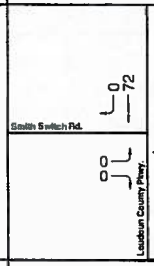	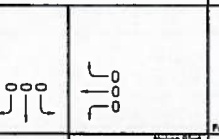	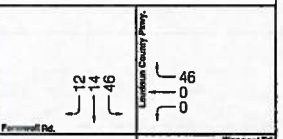
		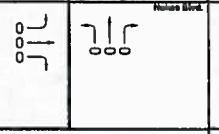	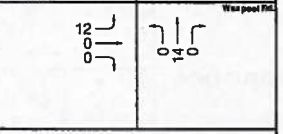

INTERSECTION 21	INTERSECTION 26	INTERSECTION 27	INTERSECTION 28
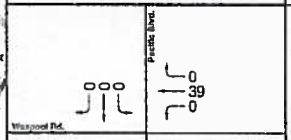	FOR FUTURE USE	FOR FUTURE USE	FOR FUTURE USE
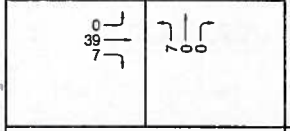			

INTERSECTION 29	INTERSECTION 30	INTERSECTION 31	INTERSECTION 32
FOR FUTURE USE	FOR FUTURE USE	FOR FUTURE USE	FOR FUTURE USE

LEGEND	INTERSECTION 33	INTERSECTION 34	INTERSECTION 35	INTERSECTION 36	INTERSECTION 37
Existing Roadway Network (2008) Planned/Recommended Roadway Network (2011) Peak Hour Traffic Volumes	FOR FUTURE USE	FOR FUTURE USE	FOR FUTURE USE	FOR FUTURE USE	FOR FUTURE USE

Appendix I-13B
Trips Generated by Background Development (2015)
Potomac Green

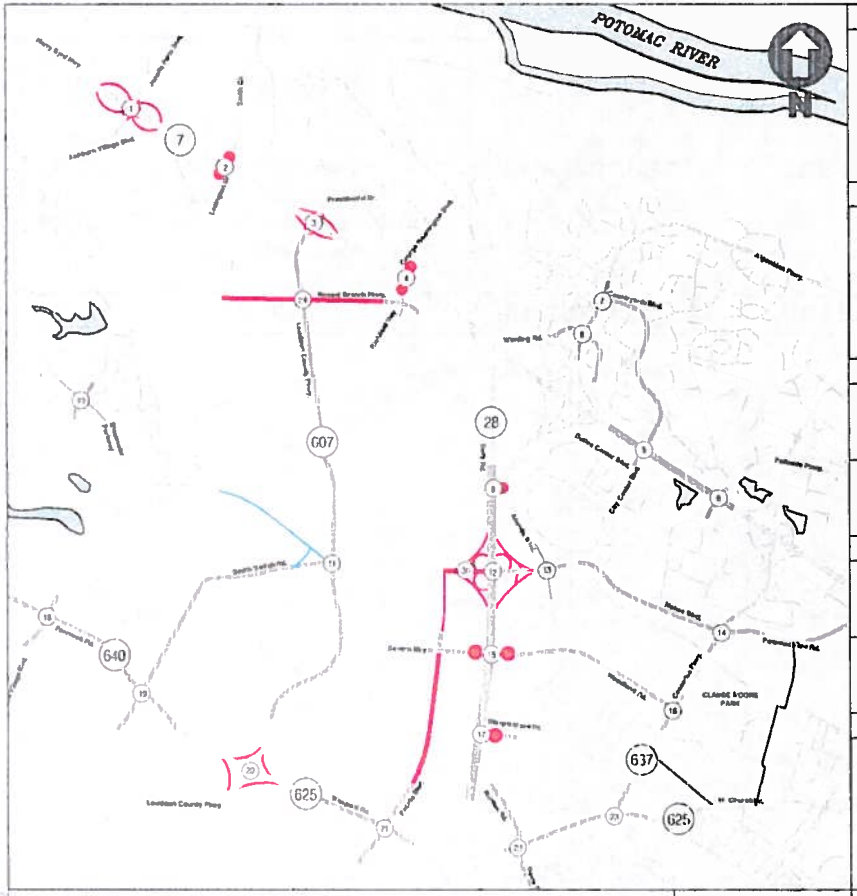

INTERSECTION 1	INTERSECTION 2	INTERSECTION 3	INTERSECTION 4	INTERSECTION 5	INTERSECTION 6
REMOVE INTERSECTION	REMOVE INTERSECTION	REMOVE INTERSECTION	REMOVE INTERSECTION		
INTERSECTION 7	**INTERSECTION 8**	**INTERSECTION 9**	**INTERSECTION 10**	**INTERSECTION 11**	**INTERSECTION 12**
		REMOVE INTERSECTION			
INTERSECTION 13	**INTERSECTION 14**	**INTERSECTION 15**	**INTERSECTION 16**	**INTERSECTION 17**	**INTERSECTION 18**
		REMOVE INTERSECTION		REMOVE INTERSECTION	
INTERSECTION 19	**INTERSECTION 20**	**INTERSECTION 21**	**INTERSECTION 22**	**INTERSECTION 23**	**INTERSECTION 24**
INTERSECTION 25	**INTERSECTION 26**	**INTERSECTION 27**	**INTERSECTION 28**	**INTERSECTION 29**	**INTERSECTION 30**
FOR FUTURE USE	FOR FUTURE USE	FOR FUTURE USE	FOR FUTURE USE	FOR FUTURE USE	FOR FUTURE USE

LEGEND	INTERSECTION 31	INTERSECTION 32	INTERSECTION 33	INTERSECTION 34	INTERSECTION 35	INTERSECTION 36	INTERSECTION 37
Existing Roadway Network (2008) Planned / Recommended Roadway Network (2011) Planned / Recommended Improvements Due Background Development (2015) AM/PM AM/PM AM/PM Peak Hour Traffic Volumes	FOR FUTURE USE	FOR FUTURE USE	FOR FUTURE USE	FOR FUTURE USE	FOR FUTURE USE		FOR FUTURE USE

Appendix I-14A
Trips Generated by Background Development (2015)
Ashburn Corporate Center

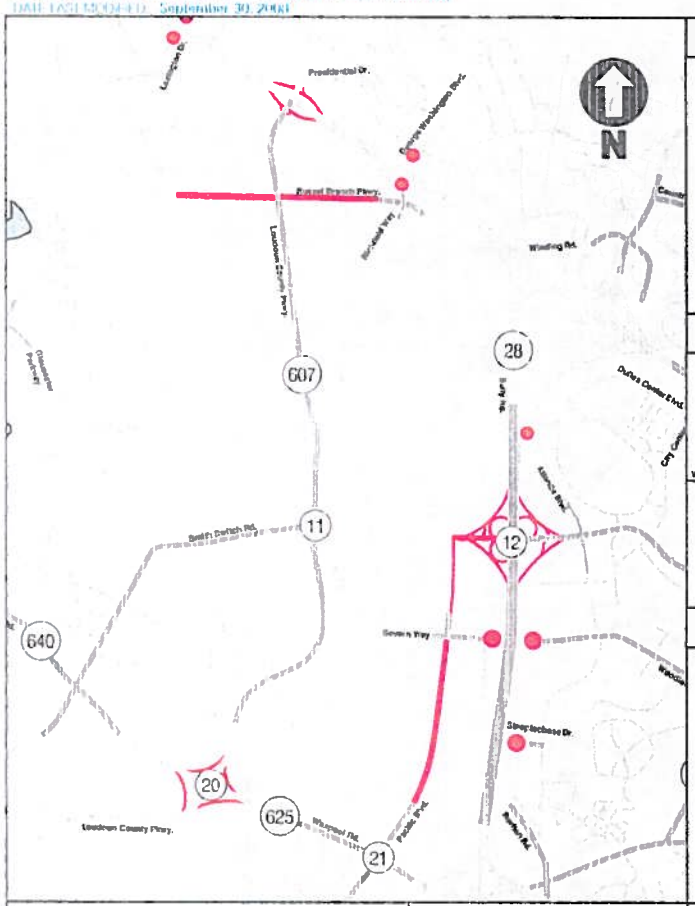

INTERSECTION 3	INTERSECTION 11	INTERSECTION 12	INTERSECTION 20
PLANNED INTERCHANGE	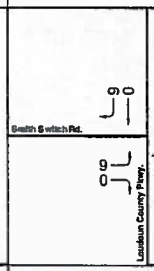	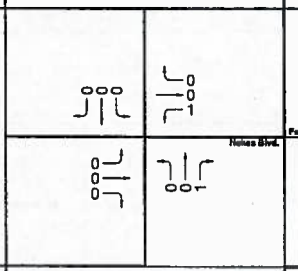	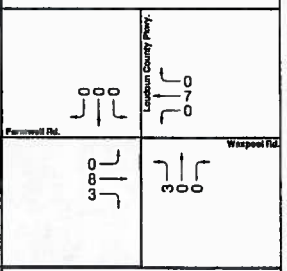
INTERSECTION 21	**INTERSECTION 26**	**INTERSECTION 27**	**INTERSECTION 28**
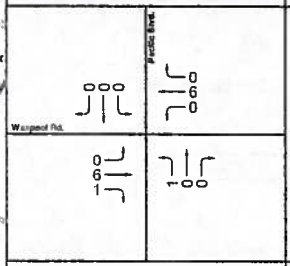	FOR FUTURE USE	FOR FUTURE USE	FOR FUTURE USE
INTERSECTION 29	**INTERSECTION 30**	**INTERSECTION 31**	**INTERSECTION 32**
FOR FUTURE USE	FOR FUTURE USE	FOR FUTURE USE	FOR FUTURE USE
LEGEND	**INTERSECTION 33**	**INTERSECTION 34**	**INTERSECTION 35**	**INTERSECTION 36**	**INTERSECTION 37**
Existing Roadway Network (2008) Planned/Recommended Roadway Network (2011) Peak Hour Traffic Volumes	FOR FUTURE USE	FOR FUTURE USE	FOR FUTURE USE	FOR FUTURE USE	FOR FUTURE USE

Appendix I-14B
Trips Generated by Background Development (2015)
Ashburn Corporate Center

APPENDIX J

OTHER APPROVED 2025 BACKGROUND DEVELOPMENTS (LOCATION MAP AND TRIPS GENERATED)

FUTURE BACKGROUND TRIP GENERATION WORKSHEET

Data collected from the Institute of Transportation Engineers (ITE) Trip Generation, 7th Edition publication.

Full Build-Out Year = 2025

Future Background Development	ITE Code	Size	Units	Weekday							Saturday			
				AM Peak Hour			PM Peak Hour			Daily	Peak Hour of Generator			Daily
				In	Out	Total	In	Out	Total	Total	In	Out	Total	Total
Ashbrook/Ashburn Village														
Office	710	280.0	kSF	376	51	427	67	325	392	2,948	47	39	86	618
Retail	820	300.0	kSF	185	118	303	621	672	1,293	13,870	775	715	1490	18,461
Subtotal				561	169	730	688	997	1,685	16,818	822	754	1,576	19,079
Ashburn Executive Center														
Office	710	700.0	kSF	783	107	890	147	716	863	5,969	97	82	179	1,517
Retail	820	120.0	kSF	107	68	175	339	367	706	7,645	440	405	845	10,365
Subtotal				890	175	1,065	486	1,083	1,569	13,614	537	487	1,024	11,882
Beaumeade														
Industrial Park	110	400.0	kSF	324	44	368	47	345	392	2,886	27	29	56	504
Subtotal				324	44	368	47	345	392	2,886	27	29	56	504
Commonwealth Center														
Office	710	350.0	kSF	450	61	511	80	391	471	3,500	56	46	102	768
Retail	820	80.9	kSF	84	54	138	261	283	544	5,917	345	317	662	8,085
Hotel	310	600	Rooms	727	465	1,192	188	166	354	4,997	235	184	419	5478
Subtotal				1,261	580	1,841	529	840	1,369	14,414	636	547	1,183	14,331
Lansdowne on the Potomac														
Single Family Attached	230	122	DU	11	50	61	48	23	71	761	43	36	79	870
Multi-Family Attached	220	350	DU	68	273	342	258	139	397	4,282	82	81	163	2,492
Adult/Retirement Housing	252	361	DU	29	35	64	53	34	87	2,767	55	54	109	910
Office	710	1,000.0	kSF	1,041	142	1,183	204	995	1,199	7,856	130	109	239	2,159
Retail	820	150.0	kSF	122	78	200	393	425	818	8,839	1635	1508	3143	39,415
Subtotal Lansdowne on the Potomac				1,271	578	1,850	956	1,616	2,572	24,505	1,945	1,788	3,733	45,846
Loudoun Pointe														
Industrial Park	110	250.0	kSF	202	28	230	29	216	245	1,766	17	18	35	376
Subtotal				202	28	230	29	216	245	1,766	17	18	35	376
Potomac Farms Business Park														
Office	710	50.0	kSF	95	13	108	23	112	135	782	12	10	22	126
Research and Development	760	150.0	kSF	165	34	198	28	157	185	1,406	18	18	36	296
Subtotal				260	47	306	51	269	320	2,188	30	28	58	422
Potomac Green														
Elderly Housing - Detached	251	233	DU	44	71	115	98	63	160	2,185	31	32	63	646
Elderly Housing - Attached	253	753	DU	33	21	55	87	68	155	1,961	113	113	226	1,891
Subtotal				77	92	170	185	131	315	4,146	144	145	289	2,537
Ashburn Corporate Center														
Industrial Park	110	400.0	kSF	324	44	368	47	345	392	2,886	27	29	56	504
Subtotal				324	44	368	47	345	392	2,886	27	29	56	504
University Center														
Office	710	500.0	kSF	598	82	680	109	530	639	4,607	74	63	137	1089
Subtotal				598	82	680	109	530	639	4,607	74	63	137	1,089
Ashburn Village Research Park														
Warehousing	150	102.0	kSF	69	15	84	14	67	81	726	9	4	13	125
Office	710	98.0	kSF	163	22	185	32	157	189	1,313	20	17	37	229
Subtotal				232	37	269	46	224	270	2,039	29	21	50	354
Dulles Town Center														
Office	710	636.1	kSF	726	99	825	135	657	792	5,545	90	76	166	1380
Business Park	770	261.4	kSF	309	58	367	85	281	366	3,558	44	37	81	578
Hotel	310	200	Rooms	60	37	97	63	55	118	980	81	62	143	1630
Elderly Housing	250	158	DU	32	32	64	32	32	64	521	24	24	48	397
Subtotal				1,127	226	1,353	315	1,025	1,340	10,604	239	199	438	3,985
One Loudoun Community														
Office Tower	710	2,975.0	kSF	2,975	259	2,334	431	2,245	2,676	11,668	313	265	578	6,385
Multi-Family/Condo	220	1,581.0	DU	156	622	778	577	310	887	9,652	334	334	668	12,155
Townhomes	230	734.0	DU	43	211	254	206	102	308	3,494	139	117	256	3,036
TDM		5%		0	-42	-42	-39	0	-39	-657	-24	-23	-47	-763
Internal to Office		15%		-30	-125	-155	-117	-62	-179	-1,972	-71	-68	-139	-2287
Internal to Retail		15%		-30	-61	-90	-117	-62	-179	-1,972	-71	-68	-139	-2287
Net Residential Trips				139	605	745	509	288	797	8,545	307	292	599	9,904
Retail	820	549.0	kSF	265	170	435	924	1,002	1,926	20,643	1127	1040	2167	27,014
Grocery Store	850	40.0	kSF	78	50	128	231	221	452	4,070	252	241	493	7,104
Convenience Store w/ Gas Pumps	945	12	Pumps	60	60	121	80	80	161	1,953	114	108	222	no data
Internal to Office		15%		51	-42	93	185	87	272	2,728	224	209	433	5118
Internal to Residential		15%		61	30	90	62	117	179	1,972	224	209	433	5118
Passby		15%		-74	-51	-75	-146	-165	-313	-3,250	-224	-209	-433	-5118
Net Retail Trips				248	177	425	840	934	1,774	18,586	821	762	1583	18764
Hotel	310	250.0	Rooms	54	35	89	55	49	105	1,305	100	77	177	2,111
Elementary School	520	675.0	Students	180	147	327	101	124	225	1,129	0	0	0	0
Subtotal One Loudoun Community				2,696	1,224	3,920	1,936	3,640	5,575	41,233	1,541	1,396	2,937	37,164
Erickson Campus at Ashburn														
Senior Adult Housing Attached		1,754	kSF	175	88	263	88	158	246					
Subtotal Erickson Campus at Ashburn				175	88	263	88	158	246	0	0	0	0	0
TOTAL FUTURE BACKGROUND TRIPS				9,998	3,414	13,413	5,512	11,419	16,929	141,706	6,068	5,504	11,572	138,073

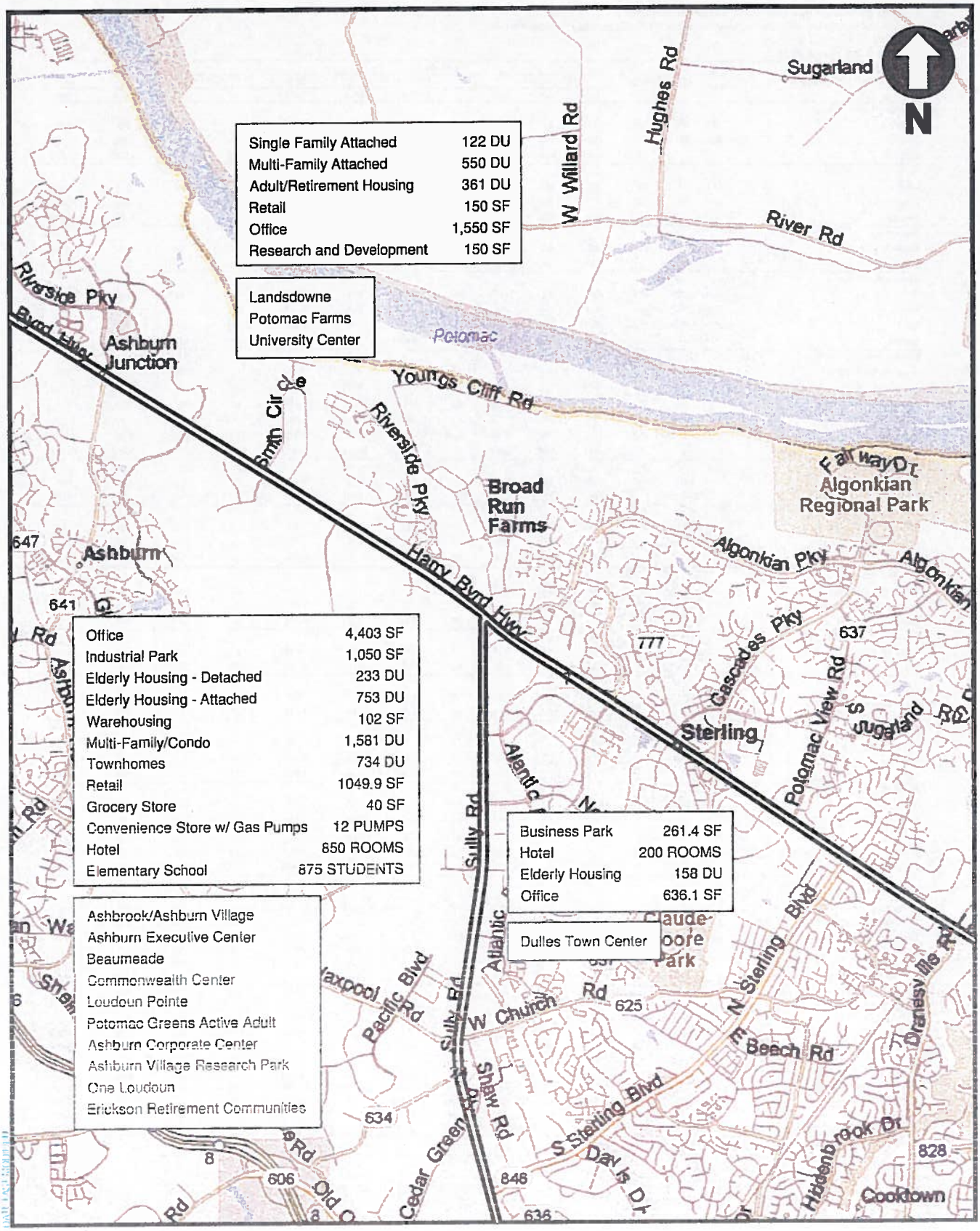

Appendix J
2025 Approved Background Developments

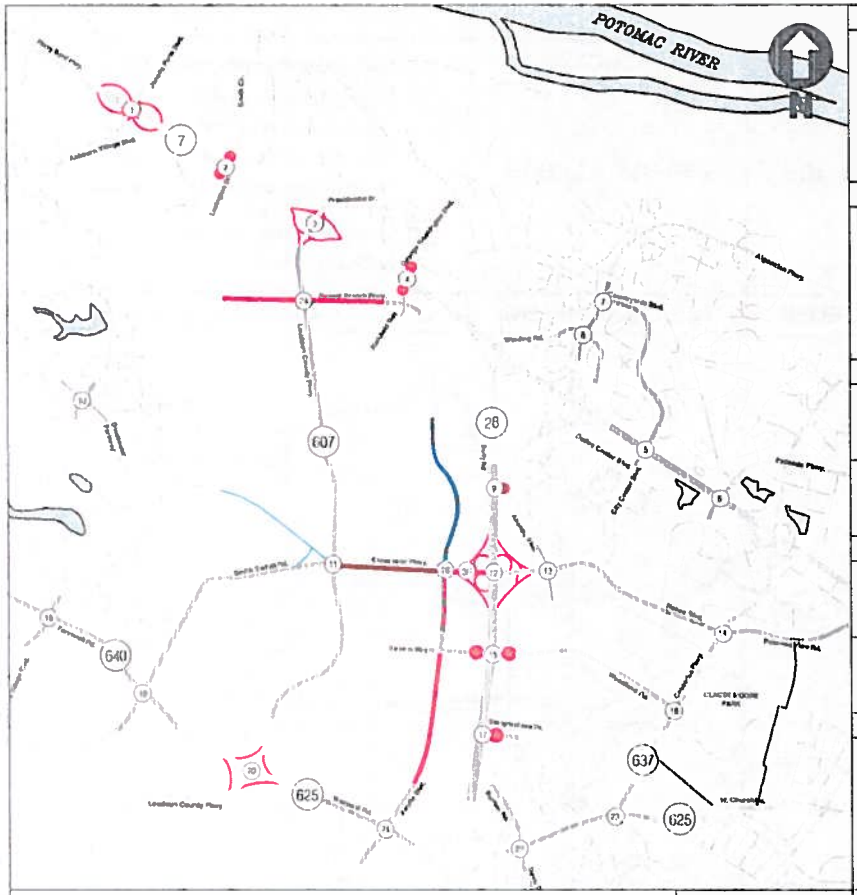

INTERSECTION 1	INTERSECTION 2	INTERSECTION 3	INTERSECTION 4	INTERSECTION 5	INTERSECTION 6
REMOVE INTERSECTION	REMOVE INTERSECTION	REMOVE INTERSECTION	REMOVE INTERSECTION		
INTERSECTION 7	**INTERSECTION 8**	**INTERSECTION 9**	**INTERSECTION 10**	**INTERSECTION 11**	**INTERSECTION 12**
		REMOVE INTERSECTION			
INTERSECTION 13	**INTERSECTION 14**	**INTERSECTION 15**	**INTERSECTION 16**	**INTERSECTION 17**	**INTERSECTION 18**
		REMOVE INTERSECTION		REMOVE INTERSECTION	
INTERSECTION 19	**INTERSECTION 20**	**INTERSECTION 21**	**INTERSECTION 22**	**INTERSECTION 23**	**INTERSECTION 24**
INTERSECTION 25	**INTERSECTION 26**	**INTERSECTION 27**	**INTERSECTION 28**	**INTERSECTION 29**	**INTERSECTION 30**
FOR FUTURE USE	FOR FUTURE USE	FOR FUTURE USE	FOR FUTURE USE	FOR FUTURE USE	FOR FUTURE USE

LEGEND	INTERSECTION 31	INTERSECTION 32	INTERSECTION 33	INTERSECTION 34	INTERSECTION 35	INTERSECTION 36	INTERSECTION 37
Existing Roadway Network (2008) Planned / Recommended Roadway Network (2011) Proposed Roadway (2011) Planned Roadway (2030) Proposed Roadway (2015) Proposed Roadway (2025) AM/PM / AM/PM / AM/PM Peak Hour Traffic Volumes	FOR FUTURE USE	FOR FUTURE USE	FOR FUTURE USE	FOR FUTURE USE	FOR FUTURE USE	FOR FUTURE USE	FOR FUTURE USE

Appendix J-1A
Trips Generated by Background Development (2025)
Ashbrook/Ashburn Village

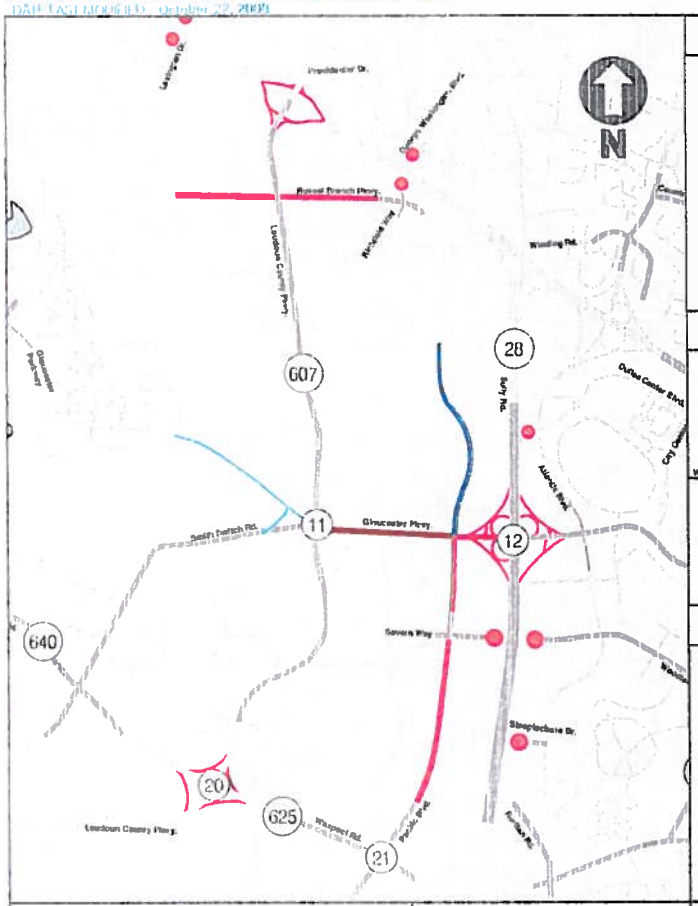

INTERSECTION 3	INTERSECTION 11	INTERSECTION 12	INTERSECTION 20
PLANNED INTERCHANGE	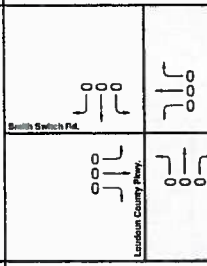	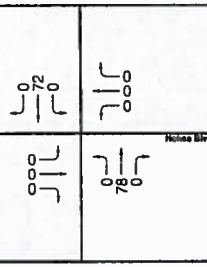	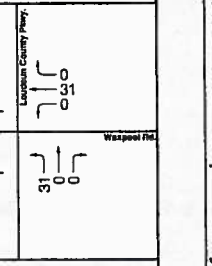

INTERSECTION 21	INTERSECTION 26	INTERSECTION 27	INTERSECTION 28
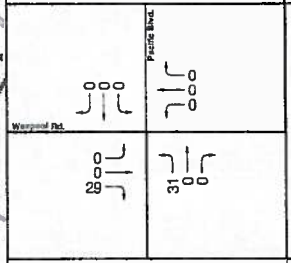	FOR FUTURE USE	FOR FUTURE USE	FOR FUTURE USE

INTERSECTION 29	INTERSECTION 30	INTERSECTION 31	INTERSECTION 32
FOR FUTURE USE	FOR FUTURE USE	FOR FUTURE USE	FOR FUTURE USE

LEGEND	INTERSECTION 33	INTERSECTION 34	INTERSECTION 35	INTERSECTION 36	INTERSECTION 37
Existing Roadway Network (2008) Planned / Recommended Roadway Network (2011) Proposed Roadway (2011) Planned Roadway (2030) Proposed Roadway (2015) Proposed Roadway (2025) Peak Hour Traffic Volumes	FOR FUTURE USE	FOR FUTURE USE	FOR FUTURE USE	FOR FUTURE USE	FOR FUTURE USE

Appendix J-1B
Trips Generated by Background Development (2025)
Ashbrook/Ashburn Village

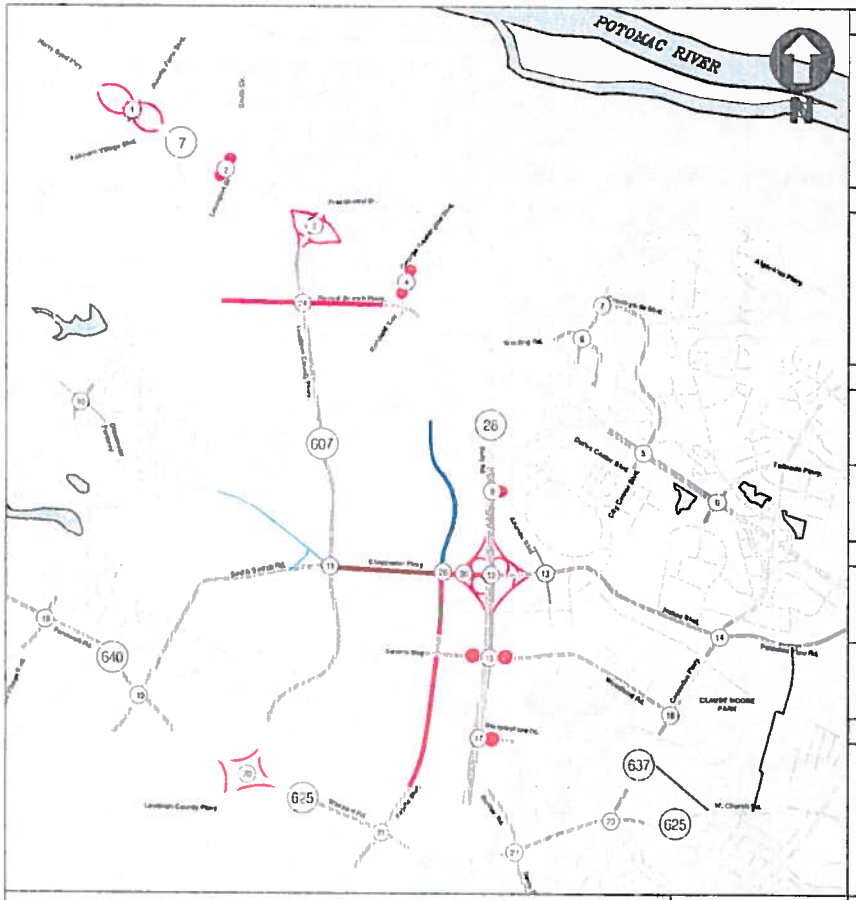

INTERSECTION 1	INTERSECTION 2	INTERSECTION 3	INTERSECTION 4	INTERSECTION 5	INTERSECTION 6
REMOVE INTERSECTION	REMOVE INTERSECTION	REMOVE INTERSECTION	REMOVE INTERSECTION		
INTERSECTION 7	**INTERSECTION 8**	**INTERSECTION 9**	**INTERSECTION 10**	**INTERSECTION 11**	**INTERSECTION 12**
		REMOVE INTERSECTION			
INTERSECTION 13	**INTERSECTION 14**	**INTERSECTION 15**	**INTERSECTION 16**	**INTERSECTION 17**	**INTERSECTION 18**
		REMOVE INTERSECTION		REMOVE INTERSECTION	
INTERSECTION 19	**INTERSECTION 20**	**INTERSECTION 21**	**INTERSECTION 22**	**INTERSECTION 23**	**INTERSECTION 24**
INTERSECTION 25	**INTERSECTION 26**	**INTERSECTION 27**	**INTERSECTION 28**	**INTERSECTION 29**	**INTERSECTION 30**
FOR FUTURE USE	FOR FUTURE USE	FOR FUTURE USE	FOR FUTURE USE	FOR FUTURE USE	FOR FUTURE USE
INTERSECTION 31	**INTERSECTION 32**	**INTERSECTION 33**	**INTERSECTION 34**	**INTERSECTION 35**	**INTERSECTION 36**	**INTERSECTION 37**
FOR FUTURE USE	FOR FUTURE USE	FOR FUTURE USE	FOR FUTURE USE	FOR FUTURE USE	FOR FUTURE USE	FOR FUTURE USE

LEGEND

- Existing Roadway Network (2008)
- Planned / Recommended Roadway Network (2011)
- Proposed Roadway (2011)
- Planned Roadway (2030)
- Proposed Roadway (2015)
- Proposed Roadway (2025)
- AM/PM / AM/PM / AM/PM — Peak Hour Traffic Volumes

Appendix J-2A
Trips Generated by Background Development (2025)
Ashburn Executive Center

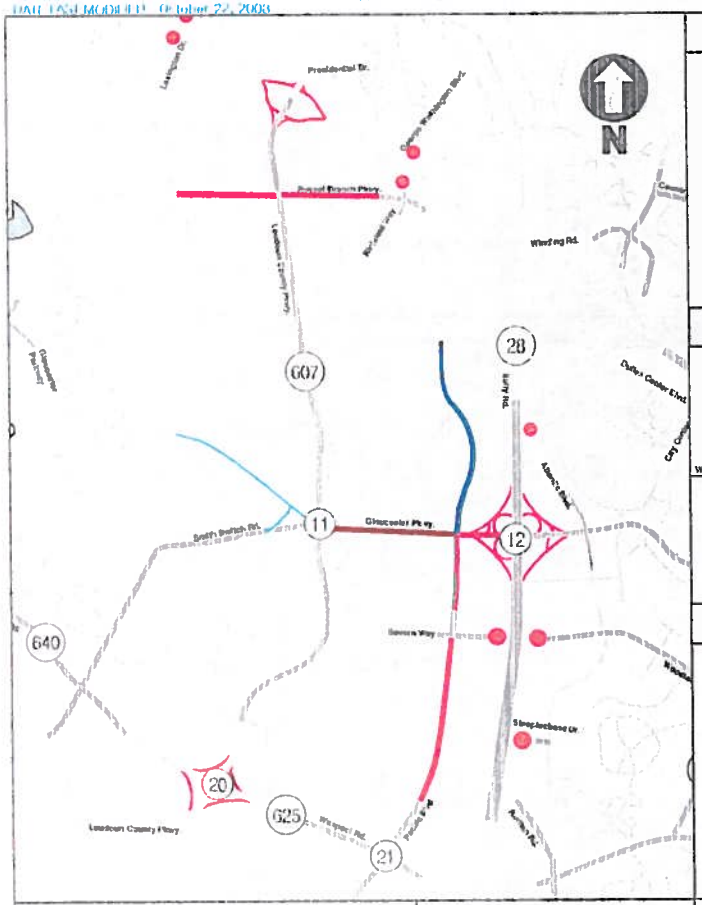

INTERSECTION 3	INTERSECTION 11	INTERSECTION 12	INTERSECTION 20
PLANNED INTERCHANGE	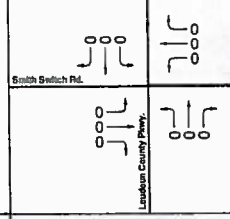	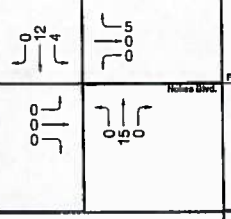	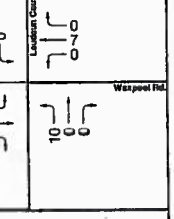

INTERSECTION 21	INTERSECTION 26	INTERSECTION 27	INTERSECTION 28
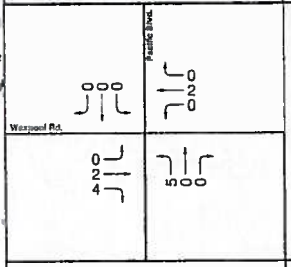	FOR FUTURE USE	FOR FUTURE USE	FOR FUTURE USE

INTERSECTION 29	INTERSECTION 30	INTERSECTION 31	INTERSECTION 32
FOR FUTURE USE	FOR FUTURE USE	FOR FUTURE USE	FOR FUTURE USE

LEGEND	INTERSECTION 33	INTERSECTION 34	INTERSECTION 35	INTERSECTION 36	INTERSECTION 37
Existing Roadway Network (2008) Planned / Recommended Roadway Network (2011) Proposed Roadway (2011) Planned Roadway (2030) Proposed Roadway (2015) Proposed Roadway (2025) Peak Hour Traffic Volumes	FOR FUTURE USE	FOR FUTURE USE	FOR FUTURE USE	FOR FUTURE USE	FOR FUTURE USE

Appendix J-2B
Trips Generated by Background Development (2025)
Ashburn Executive Center

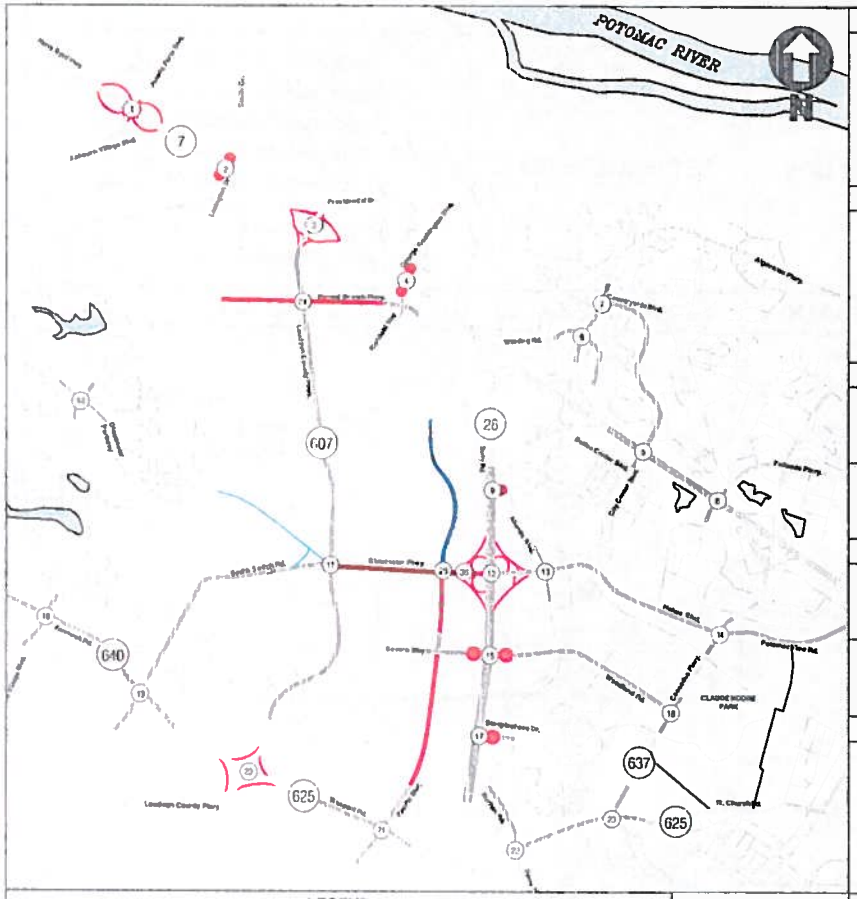

INTERSECTION 1	INTERSECTION 2	INTERSECTION 3	INTERSECTION 4	INTERSECTION 5	INTERSECTION 6
REMOVE INTERSECTION	REMOVE INTERSECTION	REMOVE INTERSECTION	REMOVE INTERSECTION		
INTERSECTION 7	**INTERSECTION 8**	**INTERSECTION 9**	**INTERSECTION 10**	**INTERSECTION 11**	**INTERSECTION 12**
		REMOVE INTERSECTION			
INTERSECTION 13	**INTERSECTION 14**	**INTERSECTION 15**	**INTERSECTION 16**	**INTERSECTION 17**	**INTERSECTION 18**
		REMOVE INTERSECTION		REMOVE INTERSECTION	
INTERSECTION 19	**INTERSECTION 20**	**INTERSECTION 21**	**INTERSECTION 22**	**INTERSECTION 23**	**INTERSECTION 24**
INTERSECTION 25	**INTERSECTION 26**	**INTERSECTION 27**	**INTERSECTION 28**	**INTERSECTION 29**	**INTERSECTION 30**
FOR FUTURE USE	FOR FUTURE USE	FOR FUTURE USE	FOR FUTURE USE	FOR FUTURE USE	FOR FUTURE USE
LEGEND	**INTERSECTION 31**	**INTERSECTION 32**	**INTERSECTION 33**	**INTERSECTION 34**	**INTERSECTION 35**	**INTERSECTION 36**	**INTERSECTION 37**
Existing Roadway Network (2008) Planned / Recommended Roadway Network (2011) Proposed Roadway (2011) Planned Roadway (2030) Proposed Roadway (2015) Proposed Roadway (2025) AM/PM AM/PM AM/PM Peak Hour Traffic Volumes	FOR FUTURE USE	FOR FUTURE USE	FOR FUTURE USE	FOR FUTURE USE	FOR FUTURE USE	FOR FUTURE USE	FOR FUTURE USE

Appendix J-3A
Trips Generated by Background Development (2025)
Beaumeade

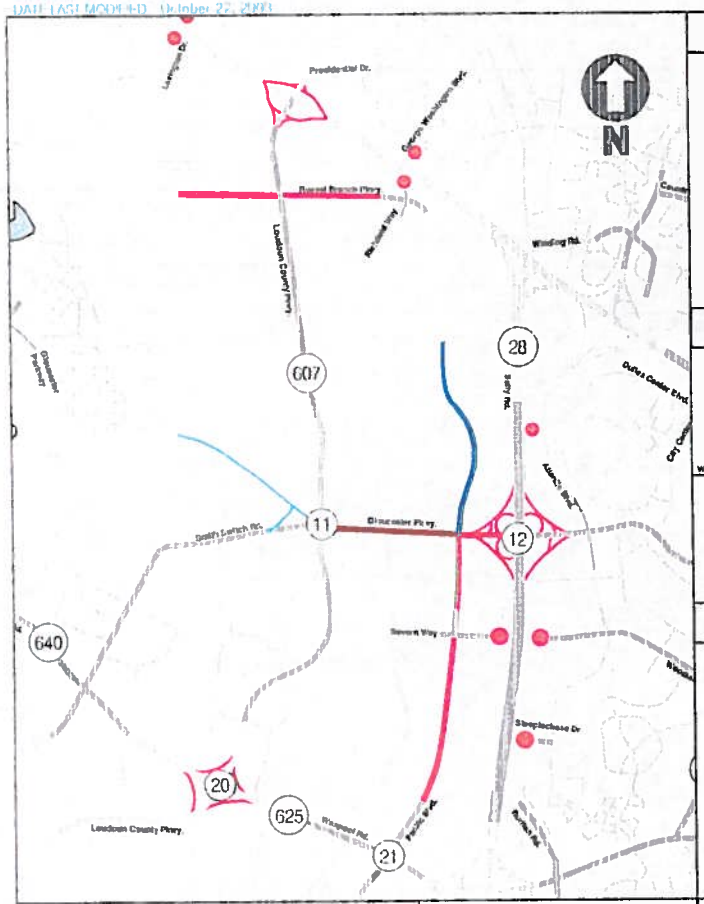

INTERSECTION 3	INTERSECTION 11	INTERSECTION 12	INTERSECTION 20
PLANNED INTERCHANGE	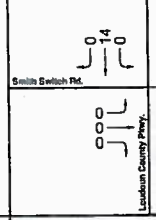	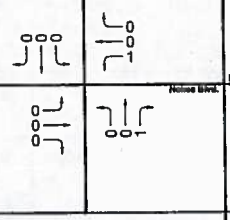	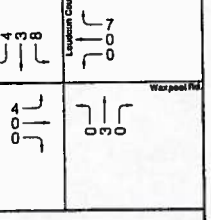

INTERSECTION 21	INTERSECTION 26	INTERSECTION 27	INTERSECTION 28
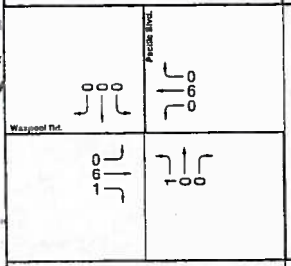	FOR FUTURE USE	FOR FUTURE USE	FOR FUTURE USE

INTERSECTION 29	INTERSECTION 30	INTERSECTION 31	INTERSECTION 32
FOR FUTURE USE	FOR FUTURE USE	FOR FUTURE USE	FOR FUTURE USE

LEGEND	INTERSECTION 33	INTERSECTION 34	INTERSECTION 35	INTERSECTION 36	INTERSECTION 37
Existing Roadway Network (2008) Planned / Recommended Roadway Network (2011) Proposed Roadway (2011) Planned Roadway (2030) Proposed Roadway (2015) Proposed Roadway (2025) Peak Hour Traffic Volumes	FOR FUTURE USE	FOR FUTURE USE	FOR FUTURE USE	FOR FUTURE USE	FOR FUTURE USE

Appendix J-3B
Trips Generated by Background Development (2025)
Beaumeade

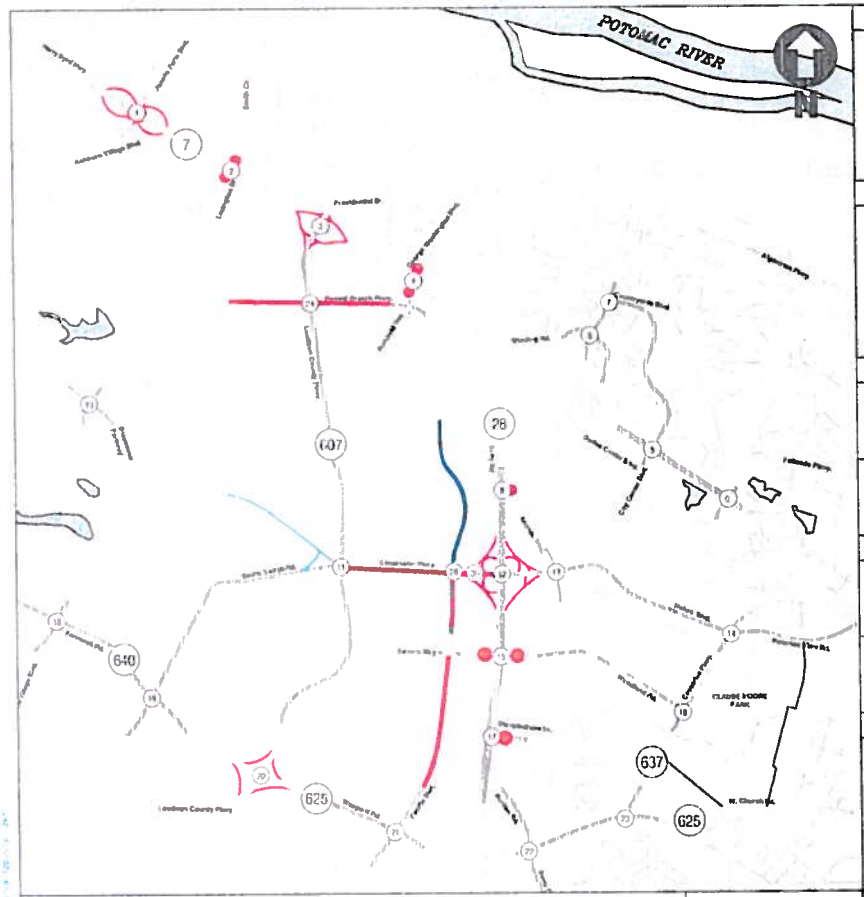

INTERSECTION 1	INTERSECTION 2	INTERSECTION 3	INTERSECTION 4	INTERSECTION 5	INTERSECTION 6
REMOVE INTERSECTION	REMOVE INTERSECTION	REMOVE INTERSECTION	REMOVE INTERSECTION		
INTERSECTION 7	**INTERSECTION 8**	**INTERSECTION 9**	**INTERSECTION 10**	**INTERSECTION 11**	**INTERSECTION 12**
		REMOVE INTERSECTION			
INTERSECTION 13	**INTERSECTION 14**	**INTERSECTION 15**	**INTERSECTION 16**	**INTERSECTION 17**	**INTERSECTION 18**
		REMOVE INTERSECTION		REMOVE INTERSECTION	
INTERSECTION 19	**INTERSECTION 20**	**INTERSECTION 21**	**INTERSECTION 22**	**INTERSECTION 23**	**INTERSECTION 24**
INTERSECTION 25	**INTERSECTION 26**	**INTERSECTION 27**	**INTERSECTION 28**	**INTERSECTION 29**	**INTERSECTION 30**
FOR FUTURE USE	FOR FUTURE USE	FOR FUTURE USE	FOR FUTURE USE	FOR FUTURE USE	FOR FUTURE USE
LEGEND	**INTERSECTION 31**	**INTERSECTION 32**	**INTERSECTION 33**	**INTERSECTION 34**	**INTERSECTION 35**	**INTERSECTION 36**	**INTERSECTION 37**
Existing Roadway Network (2008) Planned / Recommended Roadway Network (2011) Proposed Roadway (2011) Planned Roadway (2030) Proposed Roadway (2015) Proposed Roadway (2025) AM/PM AM/PM AM/PM Peak Hour Traffic Volumes	FOR FUTURE USE	FOR FUTURE USE	FOR FUTURE USE	FOR FUTURE USE	FOR FUTURE USE	FOR FUTURE USE	FOR FUTURE USE

Appendix J-4A
Trips Generated by Background Development (2025)
Commonwealth Center

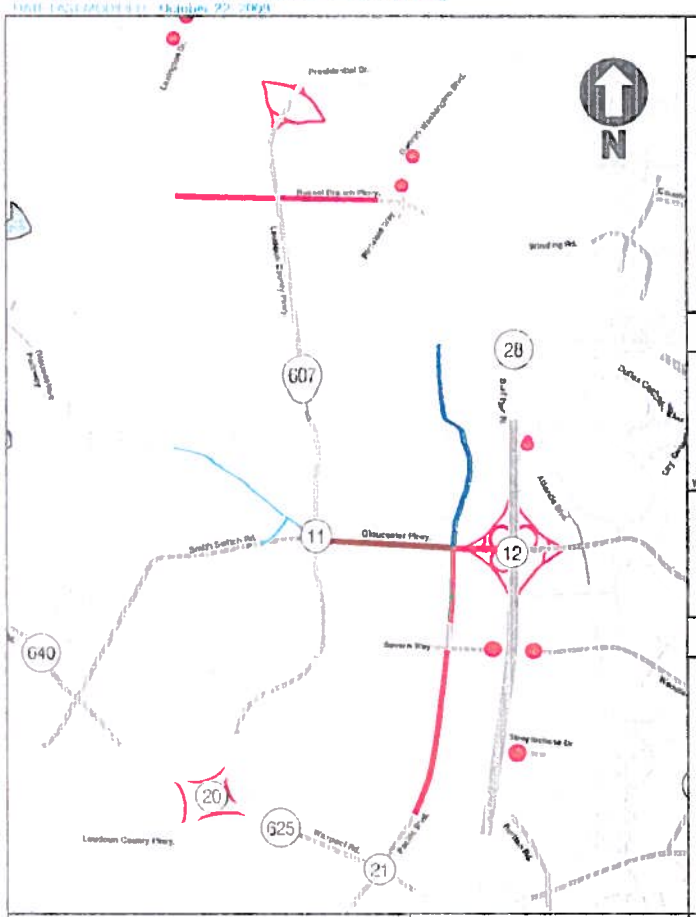

INTERSECTION 3	INTERSECTION 11	INTERSECTION 12	INTERSECTION 20
PLANNED INTERCHANGE	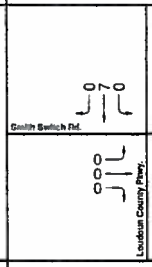	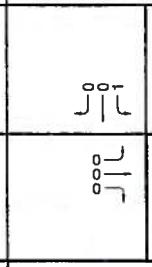	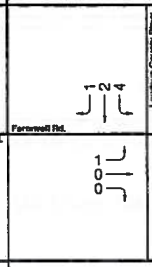

INTERSECTION 21	INTERSECTION 26	INTERSECTION 27	INTERSECTION 28
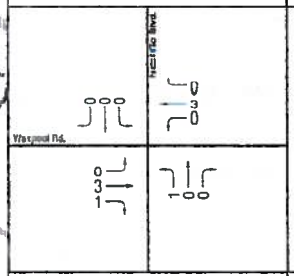	FOR FUTURE USE	FOR FUTURE USE	FOR FUTURE USE

INTERSECTION 29	INTERSECTION 30	INTERSECTION 31	INTERSECTION 32
FOR FUTURE USE	FOR FUTURE USE	FOR FUTURE USE	FOR FUTURE USE

LEGEND	INTERSECTION 33	INTERSECTION 34	INTERSECTION 35	INTERSECTION 36	INTERSECTION 37
Existing Roadway Network (2008) Planned / Recommended Roadway Network (2011) Proposed Roadway (2011) Planned Roadway (2030) Proposed Roadway (2015) Proposed Roadway (2025) Peak Hour Traffic Volumes	FOR FUTURE USE	FOR FUTURE USE	FOR FUTURE USE	FOR FUTURE USE	FOR FUTURE USE

Appendix J-5B
Trips Generated by Background Development (2025)
Loudoun Pointe

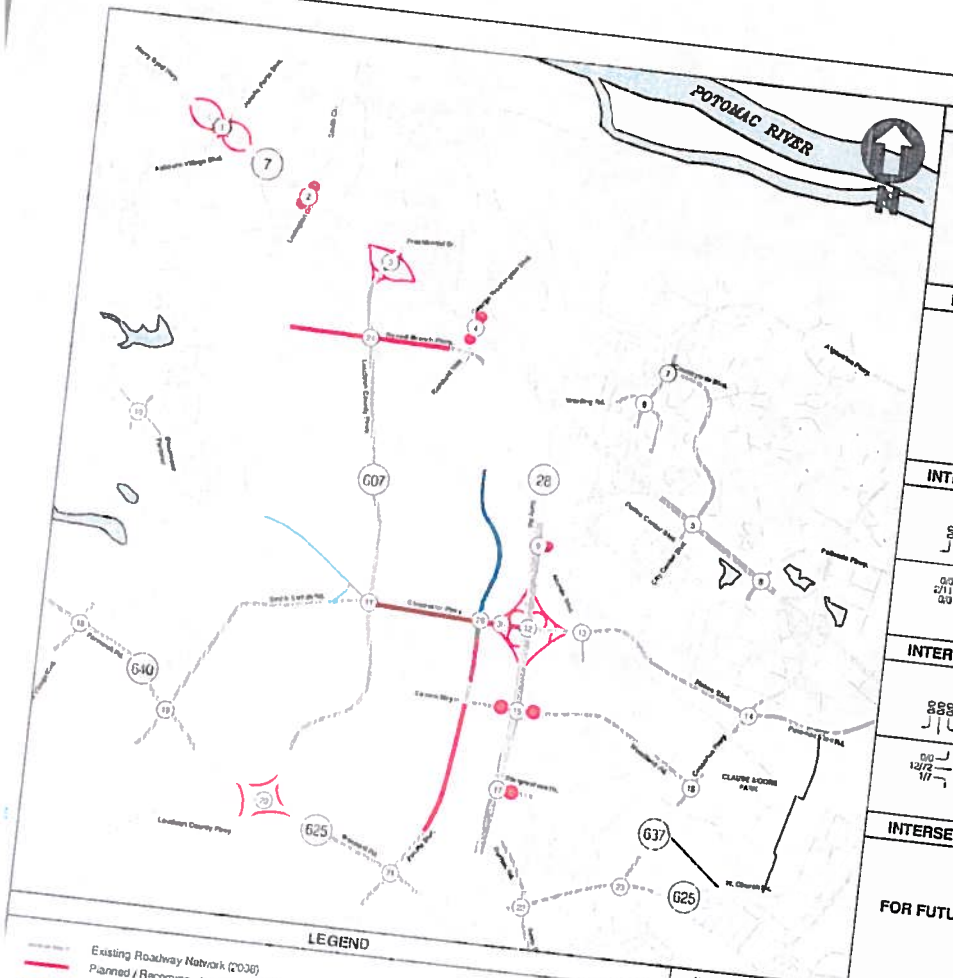

INTERSECTION 1	INTERSECTION 2	INTERSECTION 3	INTERSECTION 4	INTERSECTION 5	INTERSECTION 6
REMOVE INTERSECTION	REMOVE INTERSECTION	REMOVE INTERSECTION	REMOVE INTERSECTION		
INTERSECTION 7	INTERSECTION 8	INTERSECTION 9	INTERSECTION 10	INTERSECTION 11	INTERSECTION 12
		REMOVE INTERSECTION			
INTERSECTION 13	INTERSECTION 14	INTERSECTION 15	INTERSECTION 16	INTERSECTION 17	INTERSECTION 18
		REMOVE INTERSECTION		REMOVE INTERSECTION	
INTERSECTION 19	INTERSECTION 20	INTERSECTION 21	INTERSECTION 22	INTERSECTION 23	INTERSECTION 24
INTERSECTION 25	INTERSECTION 26	INTERSECTION 27	INTERSECTION 28	INTERSECTION 29	INTERSECTION 30
FOR FUTURE USE	FOR FUTURE USE	FOR FUTURE USE	FOR FUTURE USE	FOR FUTURE USE	FOR FUTURE USE
INTERSECTION 31	INTERSECTION 32	INTERSECTION 33	INTERSECTION 34	INTERSECTION 35	INTERSECTION 36	INTERSECTION 37
FOR FUTURE USE	FOR FUTURE USE	FOR FUTURE USE	FOR FUTURE USE	FOR FUTURE USE	FOR FUTURE USE	FOR FUTURE USE

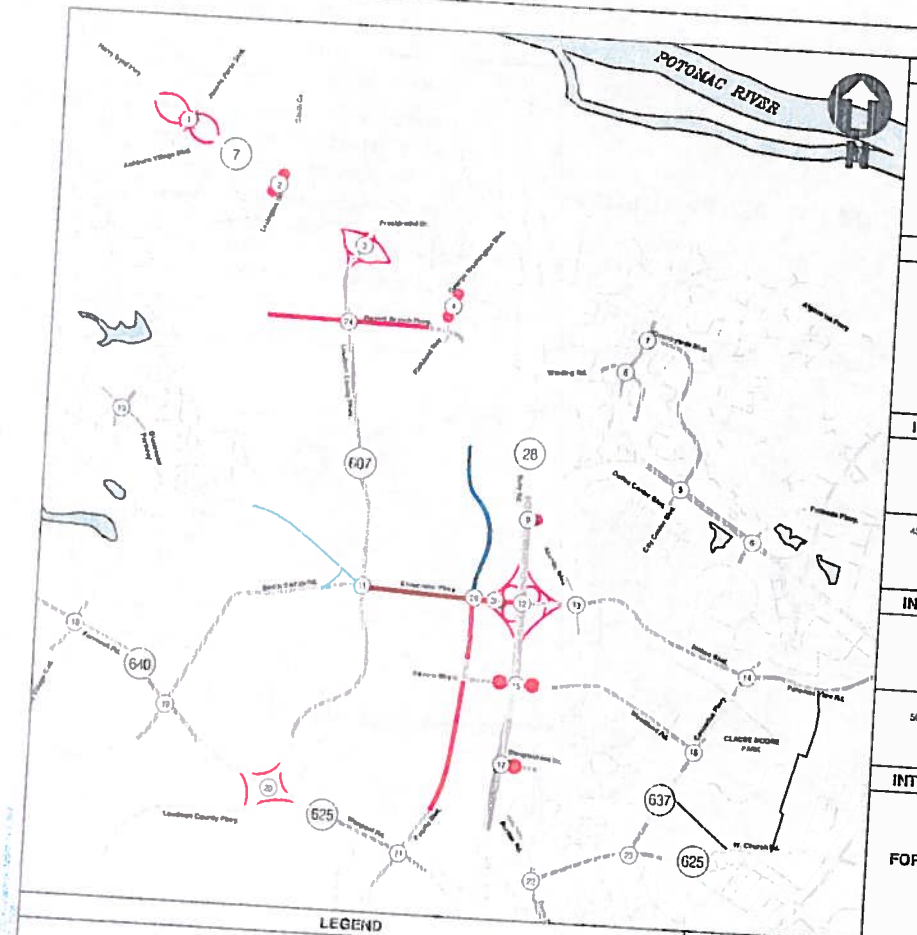

INTERSECTION 1	INTERSECTION 2	INTERSECTION 3	INTERSECTION 4	INTERSECTION 5	INTERSECTION 6
REMOVE INTERSECTION	REMOVE INTERSECTION	REMOVE INTERSECTION	REMOVE INTERSECTION	0/0 118/34 58/17; 0/0 25/105 113/31; 22/102 0/0 13/53	0/0 174/52 0/0; 0/0 39/159 0/0
INTERSECTION 7	INTERSECTION 8	INTERSECTION 9	INTERSECTION 10	INTERSECTION 11	INTERSECTION 12
0/0 0/0; 0/0 0/0	0/0 0/0 0/0; 0/0 0/0 0/0	REMOVE INTERSECTION	10/50 0/0 0/0; 55/14 0/0 0/0	0/0 0/0 0/0; 0/0 0/0 0/0	0/0 0/0 94/413; 0/0 0/0 0/0; 454/129
INTERSECTION 13	INTERSECTION 14	INTERSECTION 15	INTERSECTION 16	INTERSECTION 17	INTERSECTION 18
94/413 0/0 10/50; 55/14 0/0 0/0; 454/129 0/0 0/0	0/0 55/14 0/0; 0/0 10/50 0/0	REMOVE INTERSECTION	0/0 0/0; 0/0 0/0	REMOVE INTERSECTION	0/0 11/51 0/0; 0/0 56/15 0/0
INTERSECTION 19	INTERSECTION 20	INTERSECTION 21	INTERSECTION 22	INTERSECTION 23	INTERSECTION 24
0/0 11/51 8/32; 0/0 56/15 0/0; 0/0 35/70	0/0 19/82 22/102; 0/0 91/26 0/0; 0/0 113/31	0/0 41/185 12/52; 0/0 203/57 0/0; 0/0 57/16	0/0 23/7 0/0; 0/0 5/21 0/0	0/0 23/7; 0/0 5/21	0/0 0/0 0/0; 0/0 0/0 0/0
INTERSECTION 25	INTERSECTION 26	INTERSECTION 27	INTERSECTION 28	INTERSECTION 29	INTERSECTION 30
FOR FUTURE USE	FOR FUTURE USE	FOR FUTURE USE	FOR FUTURE USE	FOR FUTURE USE	FOR FUTURE USE
INTERSECTION 31	INTERSECTION 32	INTERSECTION 33	INTERSECTION 34	INTERSECTION 35	INTERSECTION 36	INTERSECTION 37
FOR FUTURE USE	FOR FUTURE USE	FOR FUTURE USE	FOR FUTURE USE	FOR FUTURE USE	FOR FUTURE USE	FOR FUTURE USE

LEGEND

- Existing Roadway Network (2006)
- Planned / Recommended Roadway Network (2011)
- Proposed Roadway (2011)
- Planned Roadway (2030)
- Proposed Roadway (2015)
- Proposed Roadway (2025)
- AM/PM AM/PM AM/PM — Peak Hour Traffic Volumes

Appendix J-7A
Trips Generated by Background Development (2025)
Dulles Town Center

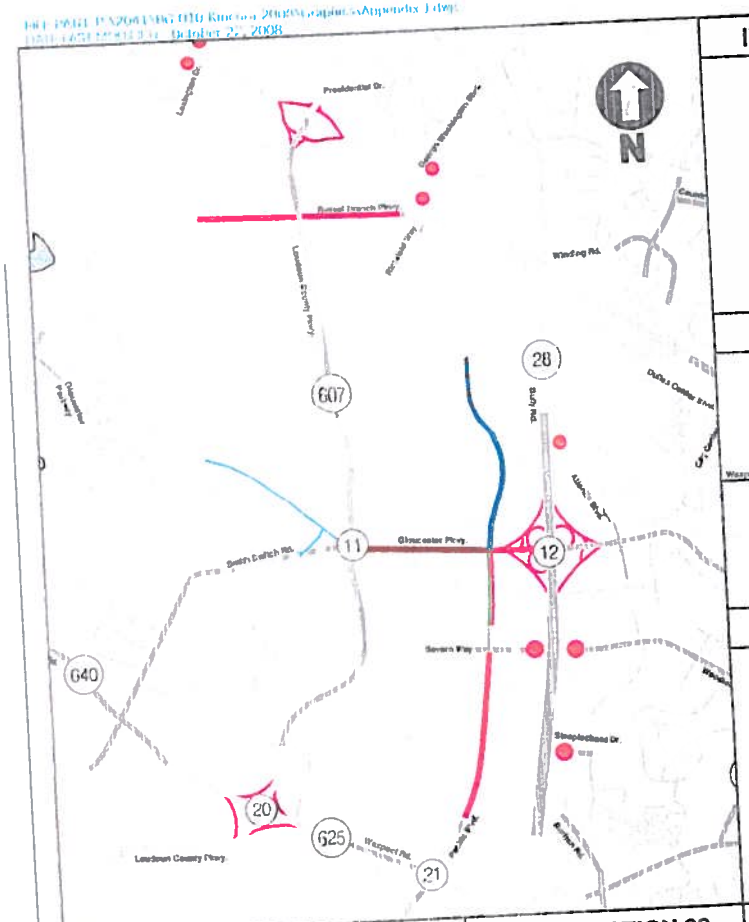

INTERSECTION 3	INTERSECTION 11	INTERSECTION 12	INTERSECTION 20
PLANNED INTERCHANGE	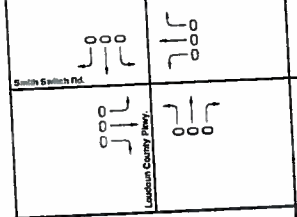	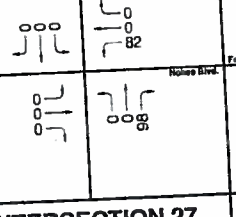	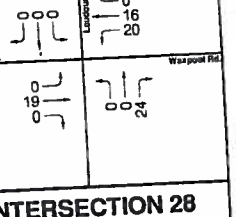

INTERSECTION 21	INTERSECTION 26	INTERSECTION 27	INTERSECTION 28
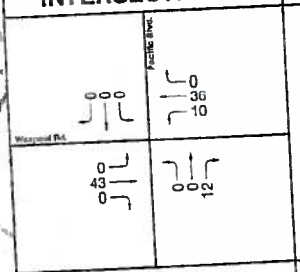	FOR FUTURE USE	FOR FUTURE USE	FOR FUTURE USE

INTERSECTION 29	INTERSECTION 30	INTERSECTION 31	INTERSECTION 32
FOR FUTURE USE	FOR FUTURE USE	FOR FUTURE USE	FOR FUTURE USE

INTERSECTION 33	INTERSECTION 34	INTERSECTION 35	INTERSECTION 36	INTERSECTION 37
FOR FUTURE USE	FOR FUTURE USE	FOR FUTURE USE	FOR FUTURE USE	FOR FUTURE USE

LEGEND

- Existing Roadway Network (2006)
- Planned / Recommended Roadway Network (2011)
- Proposed Roadway (2011)
- Planned Roadway (2030)
- Proposed Roadway (2015)
- Proposed Roadway (2025)
- Peak Hour Traffic Volumes

Appendix J-7B
Trips Generated by Background Development (2025)
Dulles Town Center

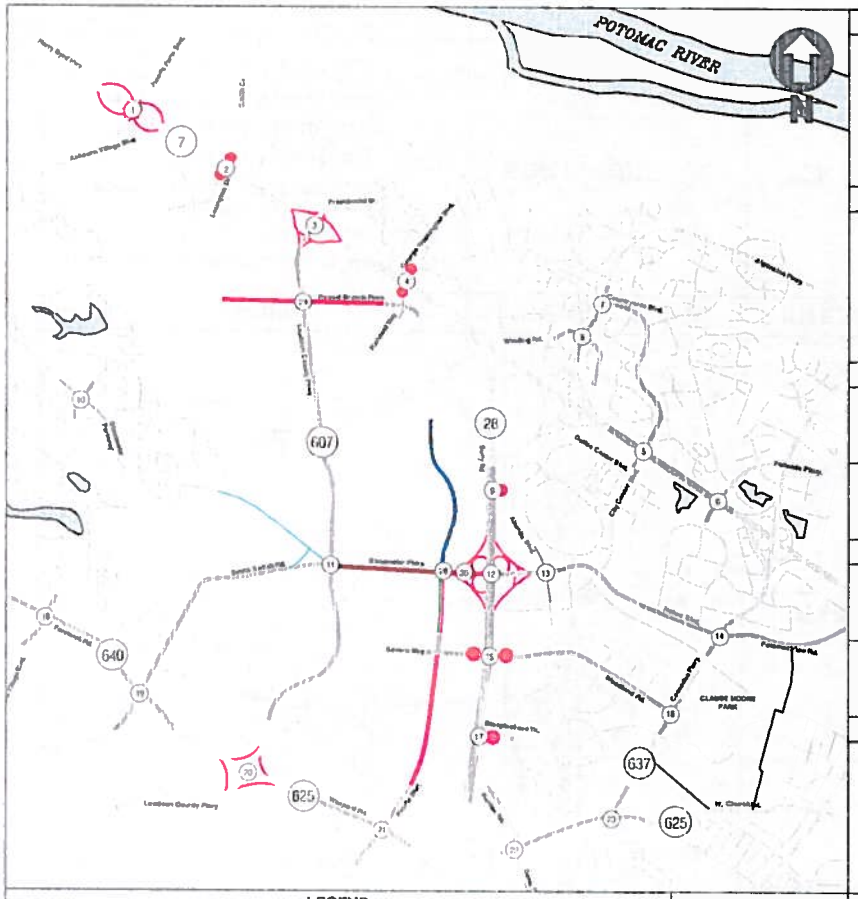

LEGEND
Existing Roadway Network (2009)
Planned / Recommended Roadway Network (2011)
Proposed Roadway (2011)
Planned Roadway (2030)
Proposed Roadway (2015)
Proposed Roadway (2025)
AM/PM / AM/PM / AM/PM Peak Hour Traffic Volumes

INTERSECTION 1	INTERSECTION 2	INTERSECTION 3	INTERSECTION 4	INTERSECTION 5	INTERSECTION 6
REMOVE INTERSECTION	REMOVE INTERSECTION	REMOVE INTERSECTION	REMOVE INTERSECTION		
INTERSECTION 7	**INTERSECTION 8**	**INTERSECTION 9**	**INTERSECTION 10**	**INTERSECTION 11**	**INTERSECTION 12**
		REMOVE INTERSECTION		425/999 20/21 961/630	
INTERSECTION 13	**INTERSECTION 14**	**INTERSECTION 15**	**INTERSECTION 16**	**INTERSECTION 17**	**INTERSECTION 18**
		REMOVE INTERSECTION		REMOVE INTERSECTION	
INTERSECTION 19	**INTERSECTION 20**	**INTERSECTION 21**	**INTERSECTION 22**	**INTERSECTION 23**	**INTERSECTION 24**
	744 165/563 256/616 499/331 14/33 437/507 446/308	224/616 499/331			237/213 216/655 139/354 254/629 475/343 510/388
INTERSECTION 25	**INTERSECTION 26**	**INTERSECTION 27**	**INTERSECTION 28**	**INTERSECTION 29**	**INTERSECTION 30**
FOR FUTURE USE	FOR FUTURE USE	FOR FUTURE USE	FOR FUTURE USE	FOR FUTURE USE	FOR FUTURE USE
INTERSECTION 31	**INTERSECTION 32**	**INTERSECTION 33**	**INTERSECTION 34**	**INTERSECTION 35**	**INTERSECTION 36**	**INTERSECTION 37**
FOR FUTURE USE	FOR FUTURE USE	FOR FUTURE USE	FOR FUTURE USE	FOR FUTURE USE	FOR FUTURE USE	FOR FUTURE USE

Appendix J-8A
Trips Generated by Background Development (2025)
One Loudoun Community

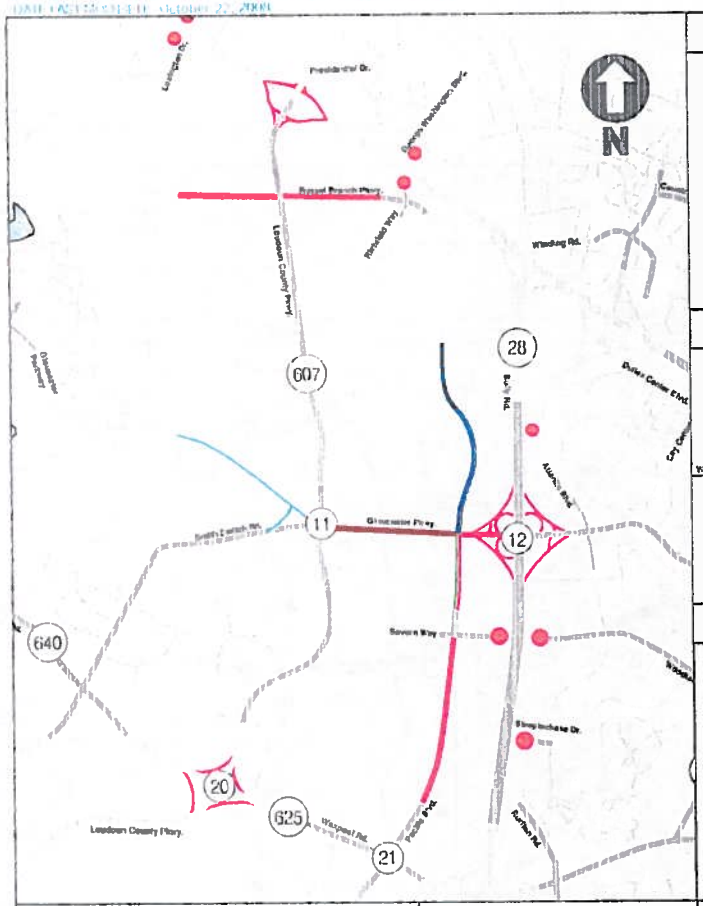

INTERSECTION 3	INTERSECTION 11	INTERSECTION 12	INTERSECTION 20
PLANNED INTERCHANGE	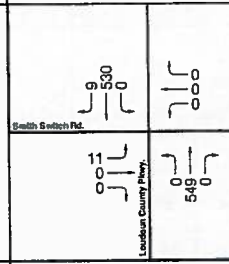	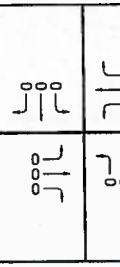	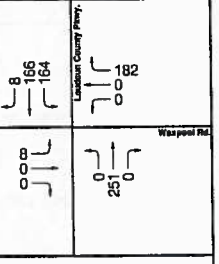

INTERSECTION 21	INTERSECTION 26	INTERSECTION 27	INTERSECTION 28
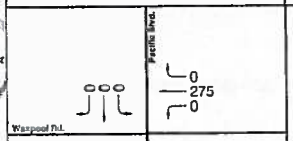	FOR FUTURE USE	FOR FUTURE USE	FOR FUTURE USE

INTERSECTION 29	INTERSECTION 30	INTERSECTION 31	INTERSECTION 32
FOR FUTURE USE	FOR FUTURE USE	FOR FUTURE USE	FOR FUTURE USE

LEGEND	INTERSECTION 33	INTERSECTION 34	INTERSECTION 35	INTERSECTION 36	INTERSECTION 37
Existing Roadway Network (2008) Planned / Recommended Roadway Network (2011) Proposed Roadway (2011) Planned Roadway (2030) Proposed Roadway (2015) Proposed Roadway (2025) Peak Hour Traffic Volumes	FOR FUTURE USE	FOR FUTURE USE	FOR FUTURE USE	FOR FUTURE USE	FOR FUTURE USE

Appendix J-8B
Trips Generated by Background Development (2025)
One Loudoun Community

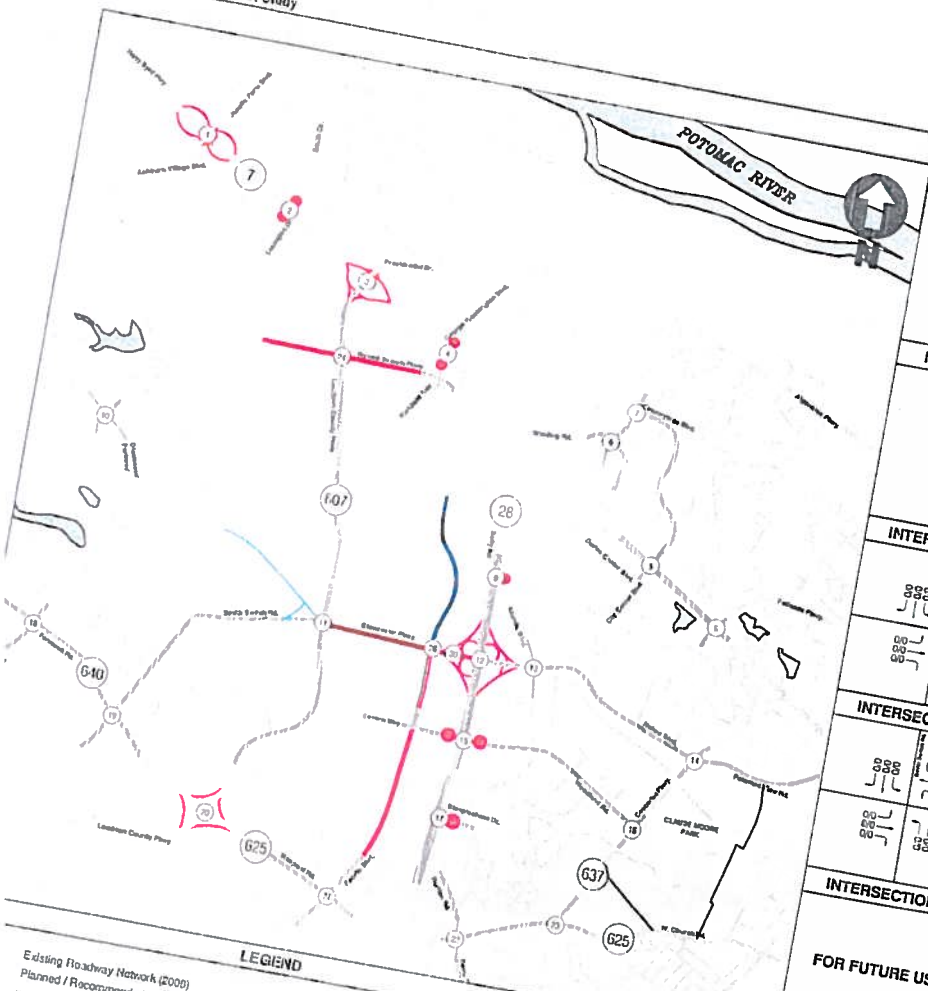

INTERSECTION 1	INTERSECTION 2	INTERSECTION 3	INTERSECTION 4	INTERSECTION 5	INTERSECTION 6
REMOVE INTERSECTION	REMOVE INTERSECTION	REMOVE INTERSECTION	REMOVE INTERSECTION		
INTERSECTION 7	INTERSECTION 8	INTERSECTION 9	INTERSECTION 10	INTERSECTION 11	INTERSECTION 12
		REMOVE INTERSECTION			
INTERSECTION 13	INTERSECTION 14	INTERSECTION 15	INTERSECTION 16	INTERSECTION 17	INTERSECTION 18
		REMOVE INTERSECTION		REMOVE INTERSECTION	
INTERSECTION 19	INTERSECTION 20	INTERSECTION 21	INTERSECTION 22	INTERSECTION 23	INTERSECTION 24
INTERSECTION 25	INTERSECTION 26	INTERSECTION 27	INTERSECTION 28	INTERSECTION 29	INTERSECTION 30
FOR FUTURE USE	FOR FUTURE USE	FOR FUTURE USE	FOR FUTURE USE	FOR FUTURE USE	FOR FUTURE USE
INTERSECTION 31	INTERSECTION 32	INTERSECTION 33	INTERSECTION 34	INTERSECTION 35	INTERSECTION 36	INTERSECTION 37
FOR FUTURE USE	FOR FUTURE USE	FOR FUTURE USE	FOR FUTURE USE	FOR FUTURE USE	FOR FUTURE USE	FOR FUTURE USE

9A
ated by Background Development (2025)
mpus at Ashburn

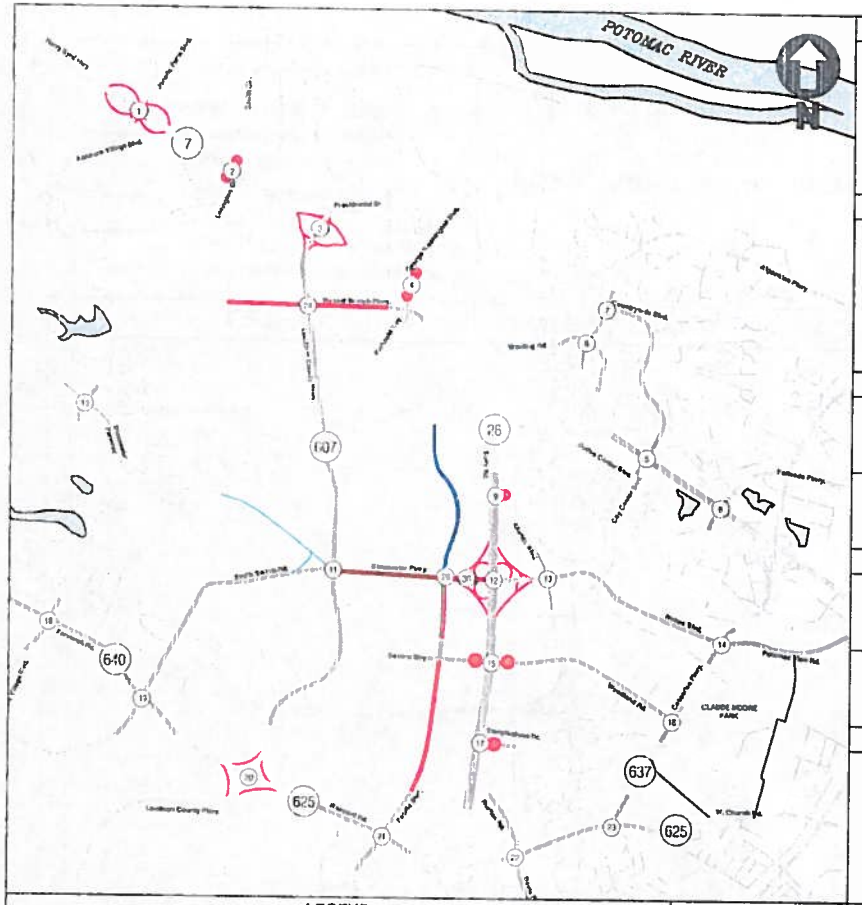

LEGEND	
Existing Roadway Network (2003)	
Planned / Recommended Roadway Network (2011)	
Proposed Roadway (2011)	
Planned Roadway (2030)	
Proposed Roadway (2015)	
Proposed Roadway (2025)	
AM/PM AM/PM AM/PM	Peak Hour Traffic Volumes

INTERSECTION 1	INTERSECTION 2	INTERSECTION 3	INTERSECTION 4	INTERSECTION 5	INTERSECTION 6
REMOVE INTERSECTION	REMOVE INTERSECTION	REMOVE INTERSECTION	REMOVE INTERSECTION		
INTERSECTION 7	**INTERSECTION 8**	**INTERSECTION 9**	**INTERSECTION 10**	**INTERSECTION 11**	**INTERSECTION 12**
		REMOVE INTERSECTION			
INTERSECTION 13	**INTERSECTION 14**	**INTERSECTION 15**	**INTERSECTION 16**	**INTERSECTION 17**	**INTERSECTION 18**
		REMOVE INTERSECTION		REMOVE INTERSECTION	
INTERSECTION 19	**INTERSECTION 20**	**INTERSECTION 21**	**INTERSECTION 22**	**INTERSECTION 23**	**INTERSECTION 24**
INTERSECTION 25	**INTERSECTION 26**	**INTERSECTION 27**	**INTERSECTION 28**	**INTERSECTION 29**	**INTERSECTION 30**
FOR FUTURE USE	FOR FUTURE USE	FOR FUTURE USE	FOR FUTURE USE	FOR FUTURE USE	FOR FUTURE USE
INTERSECTION 31	**INTERSECTION 32**	**INTERSECTION 33**	**INTERSECTION 34**	**INTERSECTION 35**	**INTERSECTION 36**	**INTERSECTION 37**
FOR FUTURE USE	FOR FUTURE USE	FOR FUTURE USE	FOR FUTURE USE	FOR FUTURE USE	FOR FUTURE USE	FOR FUTURE USE

Appendix J-10A
Trips Generated by Background Development (2025)
Ashburn Corporate Center

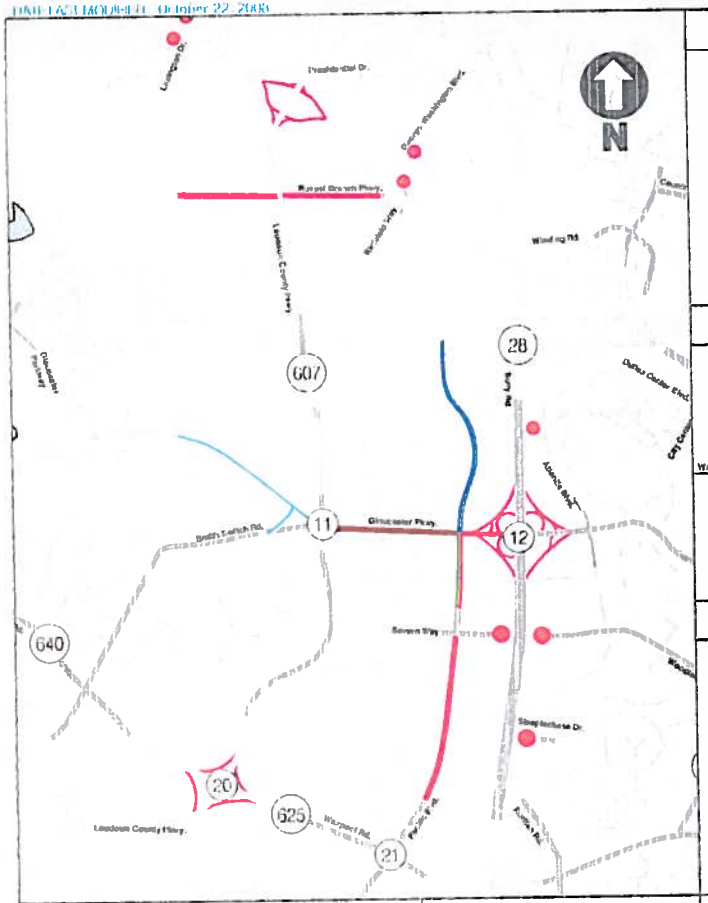

INTERSECTION 3	INTERSECTION 11	INTERSECTION 12	INTERSECTION 20
PLANNED INTERCHANGE	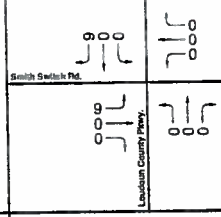	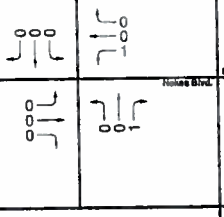	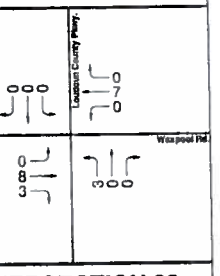

INTERSECTION 21	INTERSECTION 26	INTERSECTION 27	INTERSECTION 28
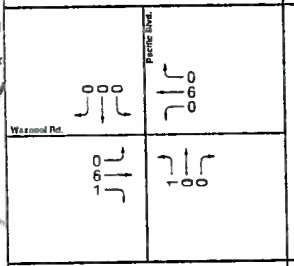	FOR FUTURE USE	FOR FUTURE USE	FOR FUTURE USE

INTERSECTION 29	INTERSECTION 30	INTERSECTION 31	INTERSECTION 32
FOR FUTURE USE	FOR FUTURE USE	FOR FUTURE USE	FOR FUTURE USE

LEGEND	INTERSECTION 33	INTERSECTION 34	INTERSECTION 35	INTERSECTION 36	INTERSECTION 37
Existing Roadway Network (2008) Planned / Recommended Roadway Network (2011) Proposed Roadway (2011) Planned Roadway (2030) Proposed Roadway (2015) Proposed Roadway (2025) Peak Hour Traffic Volumes	FOR FUTURE USE	FOR FUTURE USE	FOR FUTURE USE	FOR FUTURE USE	FOR FUTURE USE

Appendix J-10B
Trips Generated by Background Development (2025)
Ashburn Corporate Center

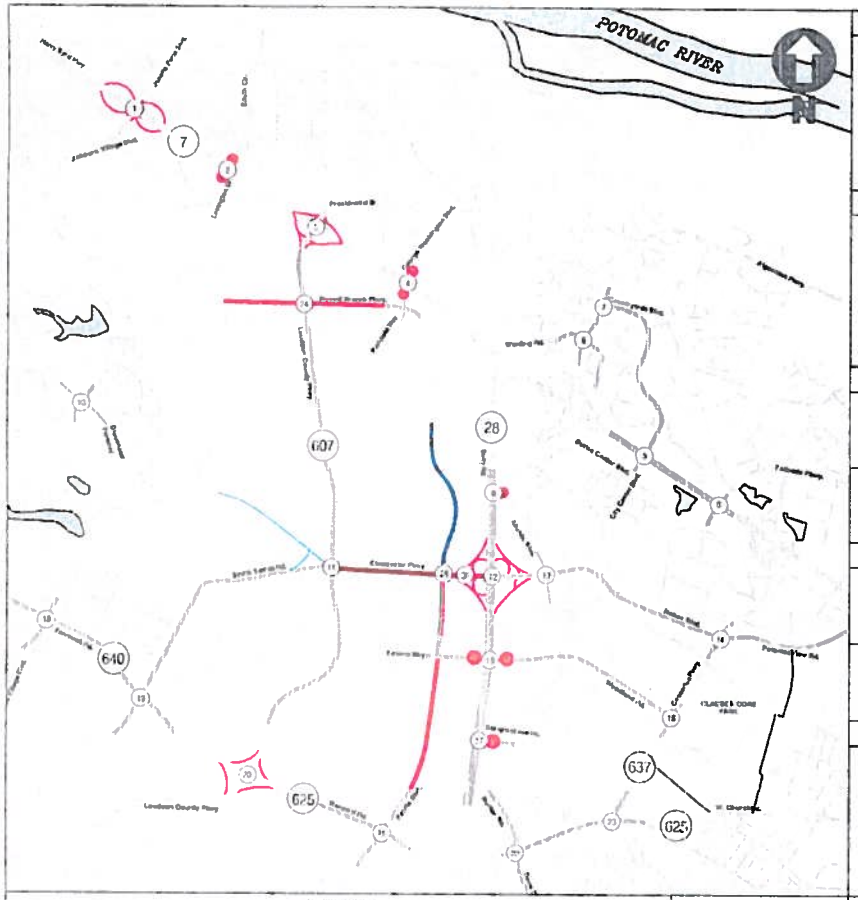

INTERSECTION 1	INTERSECTION 2	INTERSECTION 3	INTERSECTION 4	INTERSECTION 5	INTERSECTION 6
REMOVE INTERSECTION	REMOVE INTERSECTION	REMOVE INTERSECTION	REMOVE INTERSECTION		
INTERSECTION 7	**INTERSECTION 8**	**INTERSECTION 9**	**INTERSECTION 10**	**INTERSECTION 11**	**INTERSECTION 12**
		REMOVE INTERSECTION			
INTERSECTION 13	**INTERSECTION 14**	**INTERSECTION 15**	**INTERSECTION 16**	**INTERSECTION 17**	**INTERSECTION 18**
		REMOVE INTERSECTION		REMOVE INTERSECTION	
INTERSECTION 19	**INTERSECTION 20**	**INTERSECTION 21**	**INTERSECTION 22**	**INTERSECTION 23**	**INTERSECTION 24**
INTERSECTION 25	**INTERSECTION 26**	**INTERSECTION 27**	**INTERSECTION 28**	**INTERSECTION 29**	**INTERSECTION 30**
FOR FUTURE USE	FOR FUTURE USE	FOR FUTURE USE	FOR FUTURE USE	FOR FUTURE USE	FOR FUTURE USE
INTERSECTION 31	**INTERSECTION 32**	**INTERSECTION 33**	**INTERSECTION 34**	**INTERSECTION 35**	**INTERSECTION 36**	**INTERSECTION 37**
FOR FUTURE USE	FOR FUTURE USE	FOR FUTURE USE	FOR FUTURE USE	FOR FUTURE USE	FOR FUTURE USE	FOR FUTURE USE

LEGEND

- Existing Roadway Network (2008)
- Planned / Recommended Roadway Network (2011)
- Proposed Roadway (2011)
- Planned Roadway (2030)
- Proposed Roadway (2015)
- Proposed Roadway (2025)

AM/PM
AM
PM
Peak Hour Traffic Volumes

Appendix J-11A
Trips Generated by Background Development (2025)
University Center

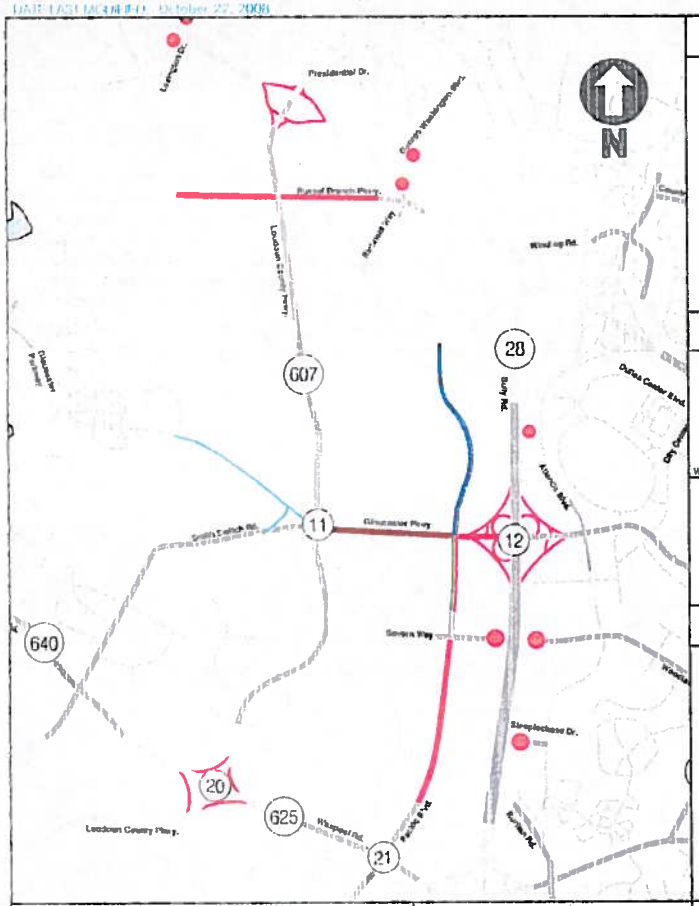

INTERSECTION 3	INTERSECTION 11	INTERSECTION 12	INTERSECTION 20
PLANNED INTERCHANGE	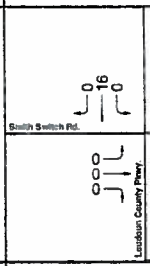	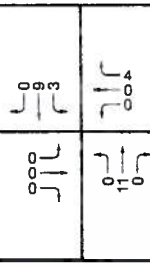	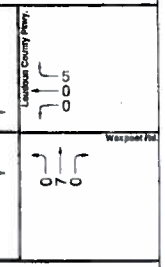

INTERSECTION 21	INTERSECTION 26	INTERSECTION 27	INTERSECTION 28
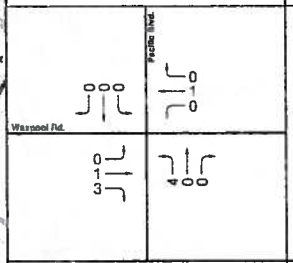	FOR FUTURE USE	FOR FUTURE USE	FOR FUTURE USE

INTERSECTION 29	INTERSECTION 30	INTERSECTION 31	INTERSECTION 32
FOR FUTURE USE	FOR FUTURE USE	FOR FUTURE USE	FOR FUTURE USE

LEGEND	INTERSECTION 33	INTERSECTION 34	INTERSECTION 35	INTERSECTION 36	INTERSECTION 37
Existing Roadway Network (2008) Planned / Recommended Roadway Network (2011) Proposed Roadway (2011) Planned Roadway (2030) Proposed Roadway (2015) Proposed Roadway (2025) Peak Hour Traffic Volumes	FOR FUTURE USE	FOR FUTURE USE	FOR FUTURE USE	FOR FUTURE USE	FOR FUTURE USE

Appendix J-11El
Trips Generated by Background Development (2025)
University Center

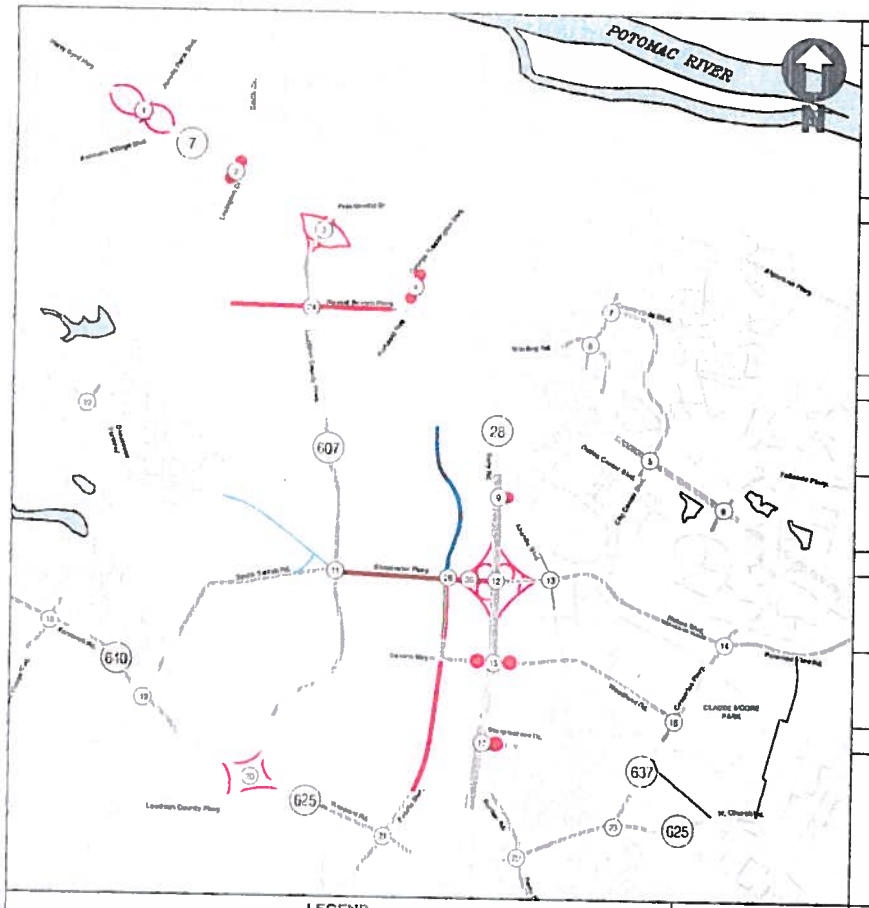

LEGEND	
Existing Roadway Network (2030)	
Planned / Recommended Roadway Network (2011)	
Proposed Roadway (2011)	AM/PM Peak Hour Traffic Volumes
Planned Roadway (2030)	
Proposed Roadway (2015)	
Proposed Roadway (2025)	

INTERSECTION 1	INTERSECTION 2	INTERSECTION 3	INTERSECTION 4	INTERSECTION 5	INTERSECTION 6
REMOVE INTERSECTION	REMOVE INTERSECTION	REMOVE INTERSECTION	REMOVE INTERSECTION		
INTERSECTION 7	**INTERSECTION 8**	**INTERSECTION 9**	**INTERSECTION 10**	**INTERSECTION 11**	**INTERSECTION 12**
		REMOVE INTERSECTION			
INTERSECTION 13	**INTERSECTION 14**	**INTERSECTION 15**	**INTERSECTION 16**	**INTERSECTION 17**	**INTERSECTION 18**
		REMOVE INTERSECTION		REMOVE INTERSECTION	
INTERSECTION 19	**INTERSECTION 20**	**INTERSECTION 21**	**INTERSECTION 22**	**INTERSECTION 23**	**INTERSECTION 24**
INTERSECTION 25	**INTERSECTION 26**	**INTERSECTION 27**	**INTERSECTION 28**	**INTERSECTION 29**	**INTERSECTION 30**
FOR FUTURE USE	FOR FUTURE USE	FOR FUTURE USE	FOR FUTURE USE	FOR FUTURE USE	FOR FUTURE USE
INTERSECTION 31	**INTERSECTION 32**	**INTERSECTION 33**	**INTERSECTION 34**	**INTERSECTION 35**	**INTERSECTION 36**	**INTERSECTION 37**
FOR FUTURE USE	FOR FUTURE USE	FOR FUTURE USE	FOR FUTURE USE	FOR FUTURE USE	FOR FUTURE USE	FOR FUTURE USE

Appendix J-12A
Trips Generated by Background Development (2025)
Potomac Farms Business Park

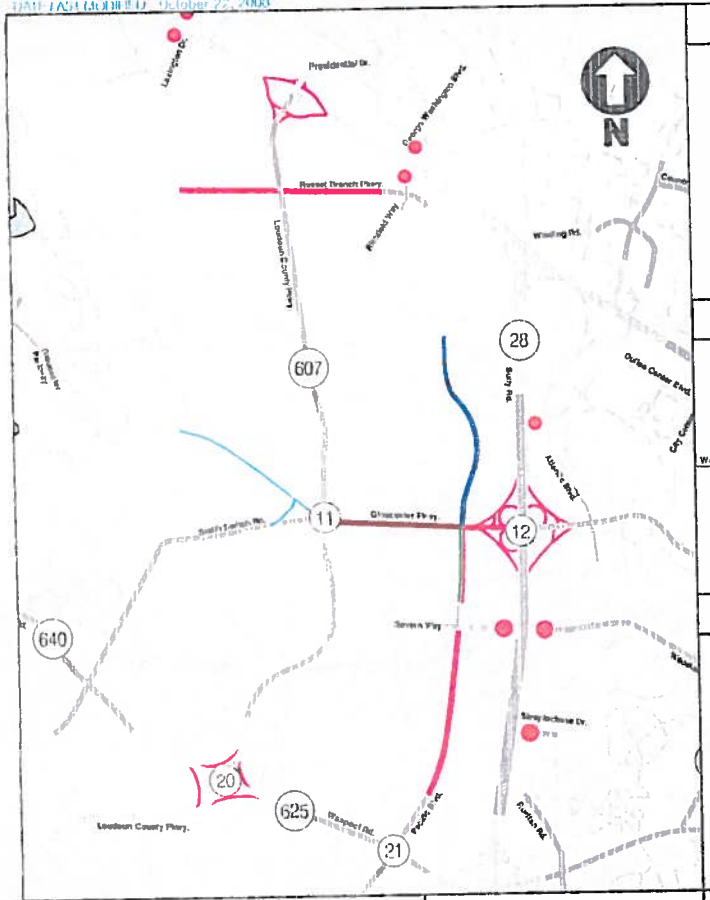

INTERSECTION 3	INTERSECTION 11	INTERSECTION 12	INTERSECTION 20
PLANNED INTERCHANGE	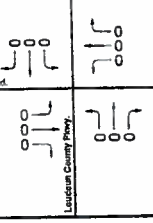	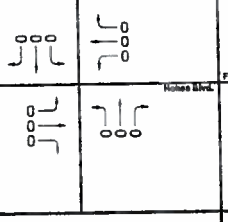	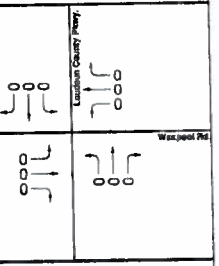

INTERSECTION 21	INTERSECTION 26	INTERSECTION 27	INTERSECTION 28
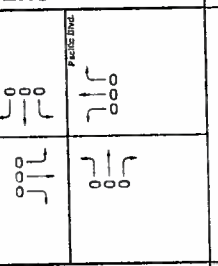	FOR FUTURE USE	FOR FUTURE USE	FOR FUTURE USE

INTERSECTION 29	INTERSECTION 30	INTERSECTION 31	INTERSECTION 32
FOR FUTURE USE	FOR FUTURE USE	FOR FUTURE USE	FOR FUTURE USE

LEGEND	INTERSECTION 33	INTERSECTION 34	INTERSECTION 35	INTERSECTION 36	INTERSECTION 37
Existing Roadway Network (2008) Planned / Recommended Roadway Network (2011) Proposed Roadway (2011) Planned Roadway (2030) Proposed Roadway (2015) Proposed Roadway (2025) Peak Hour Traffic Volumes	FOR FUTURE USE	FOR FUTURE USE	FOR FUTURE USE	FOR FUTURE USE	FOR FUTURE USE

Appendix J-12B
Trips Generated by Background Development (2025)
Potomac Farms Business Park

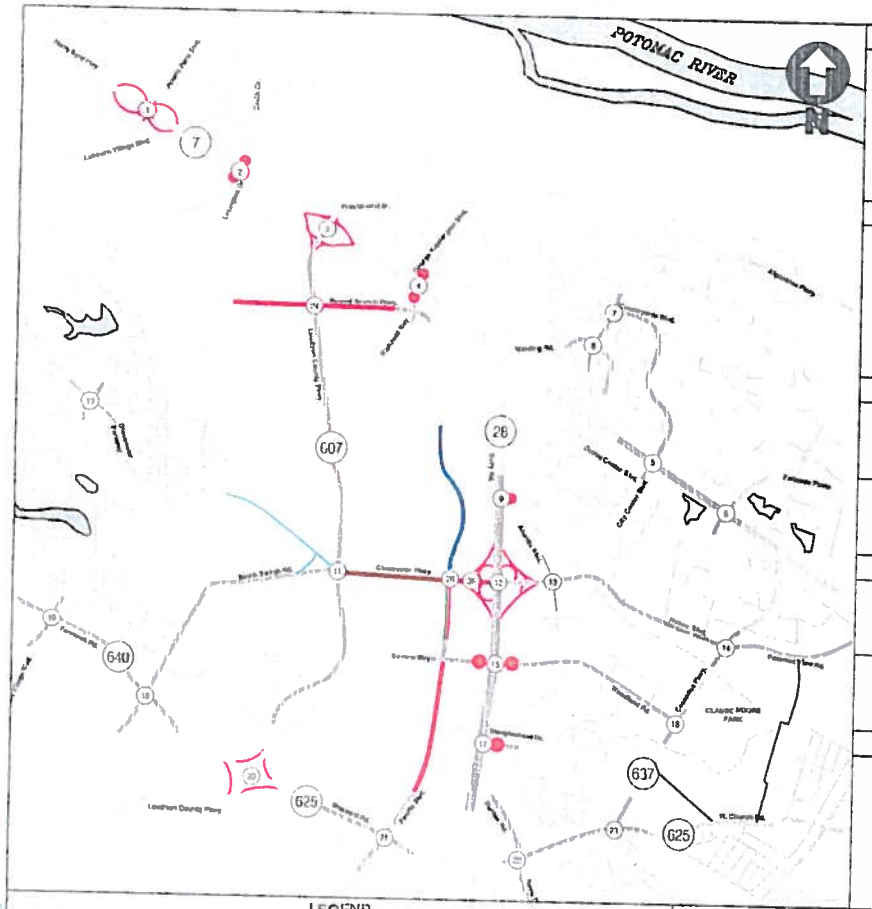

INTERSECTION 1	INTERSECTION 2	INTERSECTION 3	INTERSECTION 4	INTERSECTION 5	INTERSECTION 6
REMOVE INTERSECTION	REMOVE INTERSECTION	REMOVE INTERSECTION	REMOVE INTERSECTION		
INTERSECTION 7	**INTERSECTION 8**	**INTERSECTION 9**	**INTERSECTION 10**	**INTERSECTION 11**	**INTERSECTION 12**
		REMOVE INTERSECTION			
INTERSECTION 13	**INTERSECTION 14**	**INTERSECTION 15**	**INTERSECTION 16**	**INTERSECTION 17**	**INTERSECTION 18**
		REMOVE INTERSECTION		REMOVE INTERSECTION	
INTERSECTION 19	**INTERSECTION 20**	**INTERSECTION 21**	**INTERSECTION 22**	**INTERSECTION 23**	**INTERSECTION 24**
INTERSECTION 25	**INTERSECTION 26**	**INTERSECTION 27**	**INTERSECTION 28**	**INTERSECTION 29**	**INTERSECTION 30**
FOR FUTURE USE	FOR FUTURE USE	FOR FUTURE USE	FOR FUTURE USE	FOR FUTURE USE	FOR FUTURE USE
INTERSECTION 31	**INTERSECTION 32**	**INTERSECTION 33**	**INTERSECTION 34**	**INTERSECTION 35**	**INTERSECTION 36**	**INTERSECTION 37**
FOR FUTURE USE	FOR FUTURE USE	FOR FUTURE USE	FOR FUTURE USE	FOR FUTURE USE	FOR FUTURE USE	FOR FUTURE USE

Appendix J-13A
Trips Generated by Background Development (2025)
Potomac Green

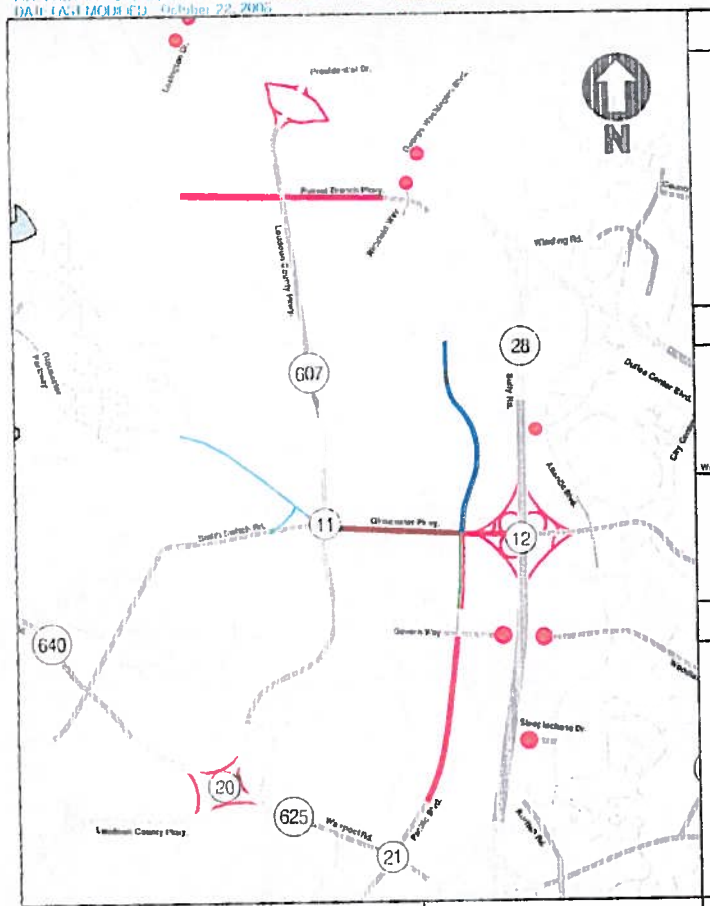

INTERSECTION 3	INTERSECTION 11	INTERSECTION 12	INTERSECTION 20
PLANNED INTERCHANGE	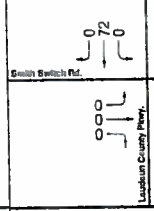	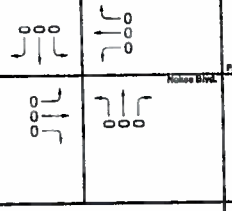	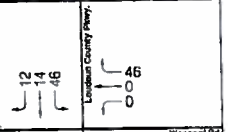

INTERSECTION 21	INTERSECTION 26	INTERSECTION 27	INTERSECTION 28
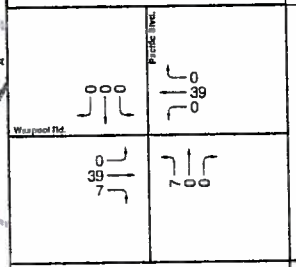	FOR FUTURE USE	FOR FUTURE USE	FOR FUTURE USE

INTERSECTION 29	INTERSECTION 30	INTERSECTION 31	INTERSECTION 32
FOR FUTURE USE	FOR FUTURE USE	FOR FUTURE USE	FOR FUTURE USE

LEGEND	INTERSECTION 33	INTERSECTION 34	INTERSECTION 35	INTERSECTION 36	INTERSECTION 37
Existing Roadway Network (2008) Planned / Recommended Roadway Network (2011) Proposed Roadway (2011) Planned Roadway (2030) Proposed Roadway (2015) Proposed Roadway (2025) Peak Hour Traffic Volumes	FOR FUTURE USE	FOR FUTURE USE	FOR FUTURE USE	FOR FUTURE USE	FOR FUTURE USE

Appendix J-13B
Trips Generated by Background Development (2025)
Potomac Green

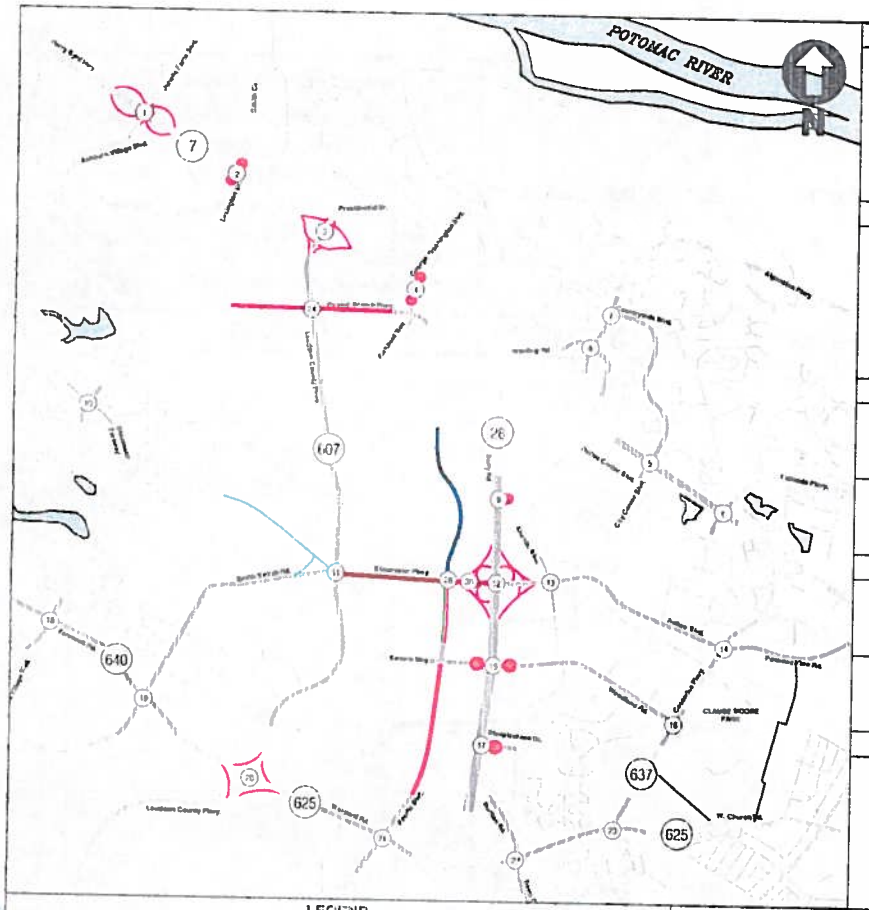

LEGEND

- Existing Roadway Network (2008)
- Planned / Recommended Roadway Network (2011)
- Proposed Roadway (2011)
- Planned Roadway (2030)
- Proposed Roadway (2015)
- Proposed Roadway (2025)
- AM/PM Peak Hour Traffic Volumes

INTERSECTION 1	INTERSECTION 2	INTERSECTION 3	INTERSECTION 4	INTERSECTION 5	INTERSECTION 6
REMOVE INTERSECTION	REMOVE INTERSECTION	REMOVE INTERSECTION	REMOVE INTERSECTION		
INTERSECTION 7	**INTERSECTION 8**	**INTERSECTION 9**	**INTERSECTION 10**	**INTERSECTION 11**	**INTERSECTION 12**
		REMOVE INTERSECTION			
INTERSECTION 13	**INTERSECTION 14**	**INTERSECTION 15**	**INTERSECTION 16**	**INTERSECTION 17**	**INTERSECTION 18**
		REMOVE INTERSECTION		REMOVE INTERSECTION	
INTERSECTION 19	**INTERSECTION 20**	**INTERSECTION 21**	**INTERSECTION 22**	**INTERSECTION 23**	**INTERSECTION 24**
INTERSECTION 25	**INTERSECTION 26**	**INTERSECTION 27**	**INTERSECTION 28**	**INTERSECTION 29**	**INTERSECTION 30**
FOR FUTURE USE	FOR FUTURE USE	FOR FUTURE USE	FOR FUTURE USE	FOR FUTURE USE	FOR FUTURE USE
INTERSECTION 31	**INTERSECTION 32**	**INTERSECTION 33**	**INTERSECTION 34**	**INTERSECTION 35**	**INTERSECTION 36**	**INTERSECTION 37**
FOR FUTURE USE	FOR FUTURE USE	FOR FUTURE USE	FOR FUTURE USE	FOR FUTURE USE	FOR FUTURE USE	FOR FUTURE USE

Appendix J-14A
Trips Generated by Background Development (2025)
Lansdowne on the Potomac

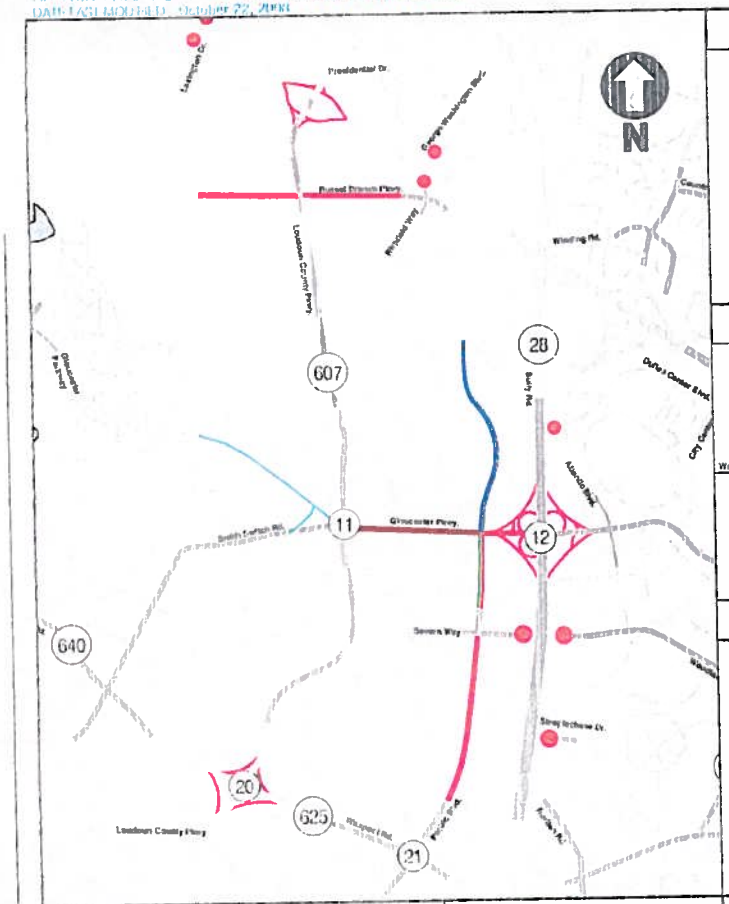

INTERSECTION 3	INTERSECTION 11	INTERSECTION 12	INTERSECTION 20
PLANNED INTERCHANGE	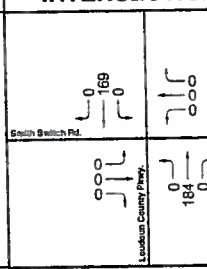	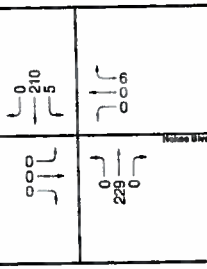	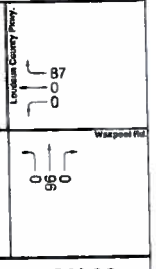

INTERSECTION 21	INTERSECTION 26	INTERSECTION 27	INTERSECTION 28
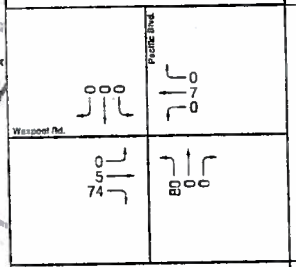	FOR FUTURE USE	FOR FUTURE USE	FOR FUTURE USE

INTERSECTION 29	INTERSECTION 30	INTERSECTION 31	INTERSECTION 32
FOR FUTURE USE	FOR FUTURE USE	FOR FUTURE USE	FOR FUTURE USE

LEGEND	INTERSECTION 33	INTERSECTION 34	INTERSECTION 35	INTERSECTION 36	INTERSECTION 37
Existing Roadway Network (2008) Planned / Recommended Roadway Network (2011) Proposed Roadway (2011) Planned Roadway (2030) Proposed Roadway (2015) Proposed Roadway (2025) Peak Hour Traffic Volumes	FOR FUTURE USE	FOR FUTURE USE	FOR FUTURE USE	FOR FUTURE USE	FOR FUTURE USE

Appendix J-14B
Trips Generated by Background Development (2025)
Lansdowne on the Potomac